IC 1004-A (2-54)

[redacted]

UNCLASSIFIED

Ref. Sym: 1923-(219)

[redacted]

[redacted]

SANDIA SYSTEMATIC DECLASSIFICATION REVIEW DOWNGRADING OR DECLASSIFICATION STAMP	
CLASSIFICATION CHANGED TO: U	AUTHORITY: R.B. Craner
Emilda Selph 7/22/97	
PERSON CHANGING MARKING & DATE	RECORD ID: 97SN2416
Carmela Dallegos 7/22/97	
PERSON VERIFYING MARKING & DATE	DATED: 6/18/97

SANDIA SYSTEMATIC DECLASSIFICATION REVIEW	
1st Review Date: CCRP Re Review	Determination (Circle Numbers):
Authority: ☐ADC ☐ADD	1. Classification Retained
Name:	2. Classification Changed to: U
2nd Review Date: 6/18/97	3. Contains No DOE Classified Information
Authority: ADD	4. Coordinate With:
Name: RB Craner	5. Contains UCNI? no
	6. Comments: ok for Openet

1-55-53

DEVELOPMENT REPORT ON ELECTROMECHANICAL ACCELERATION INTEGRATOR DESIGN

INVENTORIED MAR 2 1959 BY ORG. 4722

INVENTORIED SEP 14 1965 3428-3

K. E. Pope

INVENTORIED AUG 6 1964 3427-1

INVENTORIED MAR 7 '55 4162

ABSTRACT

This technical memorandum reports the development status of an electromechanical integrator as designed for a safe-separation device in REGULUS XMC-491A, HONEST JOHN XMC-492, and TALOS XMC-499 warhead systems.

[redacted]

[redacted]

[redacted]

CENTRAL M & R CONTROL NO. Q 46199

783 pg 49

Case No. 435.02

February 7, 1955

[redacted]

UNCLASSIFIED

DISTRIBUTION:

1/29A - R. E. Poole, 1000
2/29A - W. A. MacNair, 5000
3/29A - R. W. Henderson, 1200
4/29A - L. A. Hopkins, Jr., 1300
5/29A - A. B. Machen, 1700
6/29A - H. G. Mehlhouse, 2500
7/29A - S. C. Hight, 5100
8/29A - F. J. Given, 5300
9/29A - L. J. Paddison, 5500
10/29A - C. H. DeSelm, 1210
11/29A - E. H. Draper, 1240
12/29A - J. P. Cody, 1320
13/29A - W. J. Howard, 1330
14/29A - E. L. Deeter, 1340
15/29A - G. C. McDonald, 1630
16/29A - L. J. Biskner, 2530
17/29A - P. G. Fredrickson, 2550
18/29A - W. O. McCord, 5310
19/29A - G. T. Ford, 5330
20/29A - J. I. Hegge, Jr., 5350
21-22/29A - A. M. Garblik, 5321
23/29A - R. K. Smeltzer, 1922
24-29/29A - M. K. Linn, 1923

[redacted]

UNCLASSIFIED

 Ref. Sym: 1923-(219)

DISTRIBUTION:

1/29A - R. E. Poole, 1000
2/29A - W. A. MacNair, 5000
3/29A - R. W. Henderson, 1200
4/29A - L. A. Hopkins, Jr., 1300
5/29A - A. B. Machen, 1700
6/29A - H. G. Mehlhouse, 2500
7/29A - S. C. Hight, 5100
8/29A - F. J. Given, 5300
9/29A - L. J. Paddison, 5500
10/29A - C. H. DeSelm, 1210
11/29A - E. H. Draper, 1240
12/29A - J. P. Cody, 1320
13/29A - W. J. Howard, 1330
14/29A - E. L. Deeter, 1340
15/29A - G. C. McDonald, 1630
16/29A - L. J. Biskner, 2530
17/29A - P. G. Fredrickson, 2550
18/29A - W. O. McCord, 5310
19/29A - G. T. Ford, 5330
20/29A - J. I. Hegge, Jr., 5350
21-22/29A - A. M. Garblik, 5321
23/29A - R. K. Smeltzer, 1922
24-29/29A - M. K. Linn, 1923

UNCLASSIFIED

[redacted]

[redacted]

UNCLASSIFIED

TABLE OF CONTENTS

	Page
Abstract	1
Foreword	5
Design of the Acceleration Integrator	5
Performance and Tests	5
TALOS XMC-499 Integrator	5
REGULUS XMC-491A Integrator	5
HONEST JOHN XMC-492 Integrator	6
Evaluation of the Integrator Design	6
Production of the Acceleration Integrators	7
Test Equipment	7
Appendix A. Details of Acceleration Integrator Construction	8
Appendix B. Preliminary Report XT-238	10
Appendix C. Commercial Items Used in the Integrators	12

UNCLASSIFIED

[redacted]

[redacted]

UNCLASSIFIED

ILLUSTRATIONS

Page

Plate 1. Acceleration Integrator XMC-499 for TALOS ---------- 13
Plate 2. Acceleration Integrator XMC-492. Original Design for HONEST JOHN. ---------- 14
Plate 3. Acceleration Integrator XMC-492 for DEMIJOHN --------- 15
Plate 4. Integrating Element for Miniaturization of XMC-499 --- 16
Plate 5. Acceleration Integrator XMC-491A ---------- 17
Plate 6. Breadboard Model of Tester XT-238 ---------- 18

Fig. 1. Perspective View of Acceleration Integrator ---------- 19
Fig. 2. Top View of Acceleration Integrator ---------- 20
Fig. 3. End View of Counterbalancing Spring Mechanism -------- 21
Fig. 4. Cross-Section of Counterbalancing Spring ---------- 21
Fig. 5. Commutator Design ---------- 21
Fig. 6. Accelerometer Circuitry ---------- 22

UNCLASSIFIED

[redacted]

DEVELOPMENT REPORT ON ELECTROMECHANICAL ACCELERATION INTEGRATOR DESIGN

Foreword

This development was initiated to design and develop a replacement for the XMC-242 acceleration switch as used in the XW-5/REGULUS system. The device has been applied to safe separation in HONEST JOHN and TALOS missiles.

Design of the Acceleration Integrator

The basic unit consists of an electric motor (DC) mounted in a housing which in turn is mounted on pivot bearings (See Fig. 1). To the motor housing is attached a known mass M at a known radius R. Linear acceleration of the missile (in the direction of arrow A, Fig. 1) acts on mass M to produce a torque about a pivot axis, proportional to the acting acceleration (i.e., the torque $T = MRA_L$, where A_L is the linear acceleration). This torque moves the motor housing in a clockwise direction (as viewed in Fig. 1) until a commutator on-off switch closes the motor circuit. Closing of the switch causes the motor rotor to accelerate in a clockwise direction. The stator reaction acts upon the motor housing in opposition to the initial torque developed by mass M and overcomes it, causing the housing to rotate the on-off switch to the off position.

The device now has gone through one complete cycle in which it has put into the rotor a pulse of torque proportional to the linear acceleration of the missile. Over a number of cycles, therefore, the sum of the rotor accelerations is proportional to the aggregate acceleration of the linear system, or the velocity of the rotor is proportional to the linear velocity. A simple centrifugal leaf governor attached to the rotor gives a signal when the missile reaches the desired velocity.

Performance and Tests

Twenty-one acceleration integrators have been built and tested to date. Of these, four are designed for TALOS, one for REGULUS, and sixteen for HONEST JOHN.

TALOS XMC-499 Integrator

Of the four units for TALOS, two have been flown successfully. Two are awaiting flight test.

REGULUS XMC-491A

The one REGULUS unit was flown successfully. It gave a velocity accuracy of 1.3 ft/sec in a preset integrated velocity of 286 ft/sec.

HONEST JOHN XMC-492 Integrator

The sixteen integrators designed for HONEST JOHN have been tested as follows: eight units have been dynamically calibrated and test flown on two HONEST JOHN missiles; eight units have been ground-tested.

Of the eight flight-tested units, two operated successfully with a velocity accuracy of 50 ft/sec in a preset integrated velocity of 2350 ft/sec. Two units prematured near take-off because of faulty commutators. (Since the only logical reason for premature was an open circuit in the governor switching system, tests were run on similar units to prove defintely that the commutator was at fault.) Four units flown on the second missile gave no indication through the telemetering channel that they were operating.

Of the eight units ground-tested, four were centrifuge-calibrated and then vibrated in accordance with the dynamic cycle test of SCS-7. After vibration these units were again tested. Two were functionally good and maintained their accuracy within 2% of their previous centrifuge reading. The other two units did not operate because of relay failures. The latter two units had Clare (SA-89) relays, whereas the other two had GE (SA-89) relays. The two Clare relays were replaced by GE relays and the units functioned properly.

These four units were then subjected to the resonance vibration test of SCS-7, and after resonance again centrifuge-tested. Three of the four units operated properly within the previously mentioned 2%. The fourth unit had a radical shift in its reading of nearly 10%. This indicated that some part of the motor housing assembly had shifted because of vibration. Investigation showed that the permanent magnets of the DC motor were free to move approximately 0.003 inch. Two screws have since been added to the motor housing assembly to clamp these magnets in place.

The remaining four units have been subjected to life cycles, high and low voltage tests, dynamic linearity tests, and threshold tests on the centrifuge. The units were found to be linear in their response to square wave accelerations from 45 g to 7.5 g within 2%. They were also found to be unaffected by voltage variations over the range 32 to 24 volts DC.

Evaluation of the Integrator Design

From the results of the tests, this device seems applicable as a safe-separation velocity integrator for nearly any warhead requiring such device in its fuzing system over the range of known missile accelerations. The device is capable of being altered in design to accommodate integrated accelerations from a minimum of 3 g-sec to a maximum of 140 g-sec.

Production of the Acceleration Integrators

Department 1210 has negotiated an engineering order with Diehl Mfg. Co. to build forty XMC-492 (HONEST JOHN) and two XMC-499 (TALOS) integrators. The manufacturability of the device is reflected by the price of $190.00 each quoted by such a manufacturing company as Diehl.

Test Equipment

Concurrently with the development of the acceleration integrator, Department 1210 asked Division 1341 to develop a tester for these devices. Plate 6 shows the breadboard model of this tester, details of which are given in Appendix B. The accuracy is compatible with the field requirements of 5% over-all error for the integrator. The test equipment design may be used without regard to the effect of the earth's gravitational field on the integrator since the device is not for a static weight type of test, but instead is one which transmits a test torque through an electromagnetic clutch to the integrator test shaft.

The unit is adjustable in its input setting within the required accuracy of ± 1% over the range 57.5 gram-cm to 290 gram-cm. The range of these torques is sufficient to test any integrator within a total velocity range of 3 g-sec to 140 g-sec.

K. E. Pope - 5321-1

Case No. 435.02
February 7, 1955

APPENDIX A

DETAILS OF ACCELERATION INTEGRATOR CONSTRUCTION
Condensed from Patent Application

As shown in Figs. 1 and 2, the accelerometer comprises a housing (1) carrying on walls (4) and (5) bearings (2) and (3) that support pivots (7) and (8) which carry a casing or a stator element (10) which rotates to a limited extent about a longitudinal axis through (7) and (8). The stator, of some nonmagnetic, lightweight material such as aluminum or strong synthetic plastic, has an enlarged flywheel-encircling portion (11) which carries a weight (13) at a distance from the longitudinal axis through (7) and (8). When the device is subjected to acceleration in a direction not coincident with a plane passing through both the axis and the offset weight (13), (in the direction of arrow A in Fig. 1 or up out of the paper in Fig. 2) inertia of the weight (13) causes it to rotate the stator (10) (clockwise as viewed from the left end of Fig. 1).

The stator turns a commutator (15), fixed by a set screw to the shaft (8), so that a conducting segment (16) embedded in the plastic material of the commutator moves into contact with a stationary contact (17) carried by a nonconducting brush block (18) which is secured to the housing (1).

The brush (17) is connected with a power supply, for example, a battery (not shown), which energizes, through conductors (24) and (25) (Figs. 2, 5 and 6), the rotor coil (22) of an electric motor; the motor stator (20) is secured by screws (21) to the stator element (10) and the projecting rotor shaft (27) carries a stabilizing flywheel (23). This energization causes the motor rotor (22) and flywheel (23) also to rotate or accelerate in clockwise direction as viewed from the left end of Fig. 1. The resulting reaction on the stator, which is composed of both the motor stator permanent magnets (20) and portion (10), causes it to turn in an opposite direction (counterclockwise as viewed from the left end of Fig. 1), and commutator (15) interrupts the rotor circuit. The stator and offset weight are then "freed" so that the weight may again turn the stator (10) clockwise and re-establish the circuit. This energization and de-energization continues as long as acceleration is present. The rotating torque gives a series of energy pulses proportional to the linear acceleration impulse applied to the entire device; that is, rotary acceleration of the motor system is proportional to the applied linear acceleration, which will, of course, be the linear acceleration of the vehicle carrying the accelerometer.

A centrifugal switch or "governor" (26) is integral with the rotor (22) and when the rotor has reached a predetermined rotational speed as a result of the series of energy pulses, switch (26) interrupts the circuit, which in turn picks up the signal-out relay at a preset linear velocity.

In some instances it may be desired to obtain a circuit-opening or circuit-closing signal when the vehicle has traveled a predetermined distance. This may be achieved by substituting for the centrifugal switch (26) a suitable revolution or pulse counting device (not shown).

Excellent results are obtainable by use of a commercial 26-volt, direct current, permanent magnet motor with integral centrifugal switch or governor. The governor spring (28) may be selected so as to open the circuit at any desired rotor speed.

Where it is desired to counteract the effect of the offset weight until attainment of some particular acceleration, opposing yieldable means such as a spiral torsion spring (33) may be employed, with one end secured to a hub (34) of stator (10) and its other end looped around a combined support and guide roller (35) that is fastened to support (1) (See Fig. 3).

The pivot (8) is affixed to a pivot block (37) screwed to the end of the stator. Recesses (38) protect the wiring of the motor, centrifugal switch, and commutator against jarring. A stop pin (42) affixed to the support wall (5) cooperates with a stator shoulder (43) to maintain the weight at an angle to an acceleration upward through the longitudinal axis. Efficiencies are enhanced by closing the flywheel enclosure (11) with an end plate (44).

Circuitry is shown in Figs. 5 and 6.

The invention provides a new and improved accelerometer of simple, compact construction which is highly sensitive to acceleration forces and highly accurate. In one size the length is about 5½ inches, width little more than 3 inches, and height less than 4½ inches. Another size is even smaller. The device does not depend upon a yieldable bellows or diaphragm to force fluid through one or more orifices and is therefore free of difficulties due to aging of bellows or diaphragm, variation of fluid viscosity due to temperature, differences in fluid flow due to nonuniformity of orifices, etc. It is of rugged construction, well adapted to withstand rapid accelerations and all normal usage to which it may be subjected.

APPENDIX B

PRELIMINARY REPORT - XT-238

Prepared by Section 1341-1
17 December 1954

The XT-238 is the preliminary design of a field tester for the MC-491A, the MC-492 and the MC-499. The design requirements for this tester are that a specified constant torque be applied to the test shaft of the MC units, and that the operating time of the MC unit be obtained with an over-all tester accuracy of about ± 2% for the MC-492.

The XT-238 prototype in use in November and December of 1954 was designed and built merely to test out components and testing methods. It is designed to test only the MC-492, since this unit has the first anticipated use. Several modifications will have to be made in order to test the other MC units with the present prototype.

There are two designs for the XT-238 that offer promise. One method is to use a hysteresis clutch to deliver the constant torque to the MC unit test shaft. The present XT-238 prototype is designed on this principle.

The hysteresis clutch torque output is proportional to the current through the clutch field; therefore, a ± 1% variable current regulated power supply is incorporated in the tester. In the present prototype a ½% ammeter is used to determine the current. The torque requirement for either of the three MC units can be obtained merely by setting the current (with a potentiometer) to a specific value corresponding to the torque required.

The torque output of the hysteresis clutch is essentially independent of the speed at which it is driven; however, tests show that 3600 rpm is in the optimum speed range to drive the clutch. A small 3600 rpm AC synchronous motor is used for this.

The MC-492 is connected electrically to a timer. At the moment the torque is applied to the test shaft of the MC unit the timer starts. When the MC unit operates the timer stops, thus the operating time is measured.

Test data taken on this prototype indicate that this system of testing is possible for a field tester. Any series of data taken falls within a range of about ± 2%, (this is tester plus MC-492 error) provided sufficient time is allowed between tests to keep the MC-492 from getting hot. From day to day these series of data shift slightly. There are several possible

causes of this shift, and it is not considered to be too serious a problem to solve. No tests have been made to determine the effects hot and cold temperature will have on the torque output for a specific current. A short warm-up period will probably be required to stabilize the torque output.

The second possibility for the XT-238 is use of a "Negator" spring to supply the constant torque to the MC unit test shaft. These springs have been tested on the present XT-238 prototype. Under controlled testing conditions the "Negator" springs were slightly more consistent than the hysteresis clutch. The springs tested were not temperature compensating. Two new springs made of a temperature compensating alloy are on hand, but have not been tested. There is a definite hysteresis effect of the springs, which is undesirable.

Since each "Negator" spring can deliver only one specific torque, three different springs will be required to test the three MC units.

Of the two possibilities investigated for the XT-238 the hysteresis clutch appears to be the most promising. Present information seems to show that the clutch principle will be more reliable under most conditions and will be easier and quicker to operate. Much more development will have to be done before either is developed into a good field tester.

APPENDIX C

COMMERCIAL ITEMS USED IN THE INTEGRATORS

The XMC-492 and 499 use a SA-141 permanent magnet DC motor, which is a commercial product of Globe Industries, Dayton, Ohio. The XMC-491A uses in its integrating element the SA-160 motor manufactured by Globe Industries, Dayton, Ohio. All of the integrators use the SA-89 relay manufactured by GE for their output signal relay.

Other commercial items contained in the design consist of a Mallory tantalum capacitor, Dalohm resistors and a GE 1N92 Diode in the arc suppression circuitry. The pivot bearing is a standard bearing manufactured by Miniature Precision Ball Bearing Co., Keene, N. H.

The counterbalancing spring is a standard part manufactured by Hunter Spring Co., Lansdale, Penn., under the trade name "Negator".

[redacted]

UNCLASSIFIED

Plate 1. -- Acceleration Integrator XMC-499 for TALOS (Interior).
(The original design will be miniaturized by incorporation of the integrating element shown in Plate 4)

UNCLASSIFIED

[redacted]

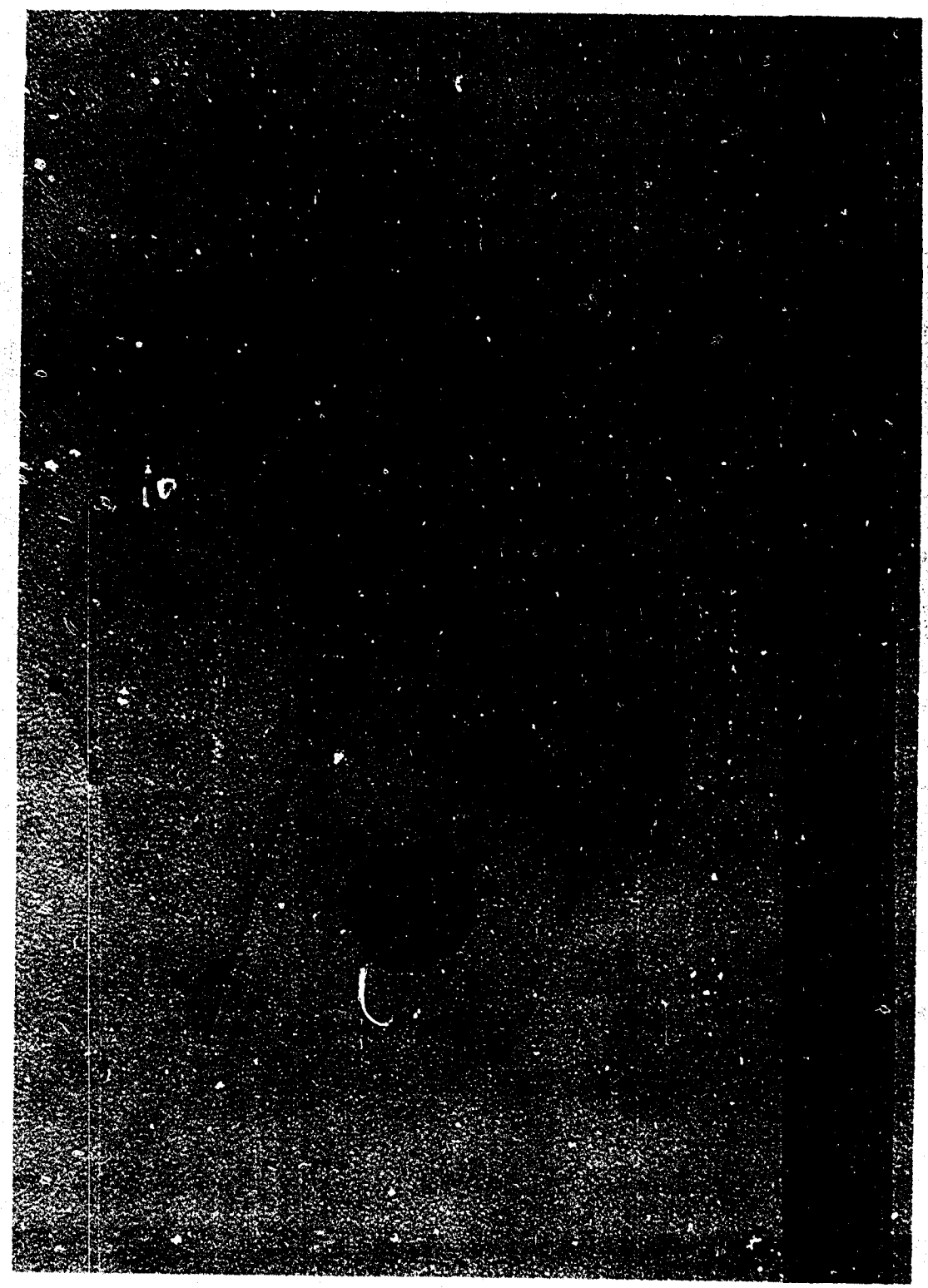

Plate 2. -- Acceleration Integrator XMC-492.
(Original design for HONEST JOHN)

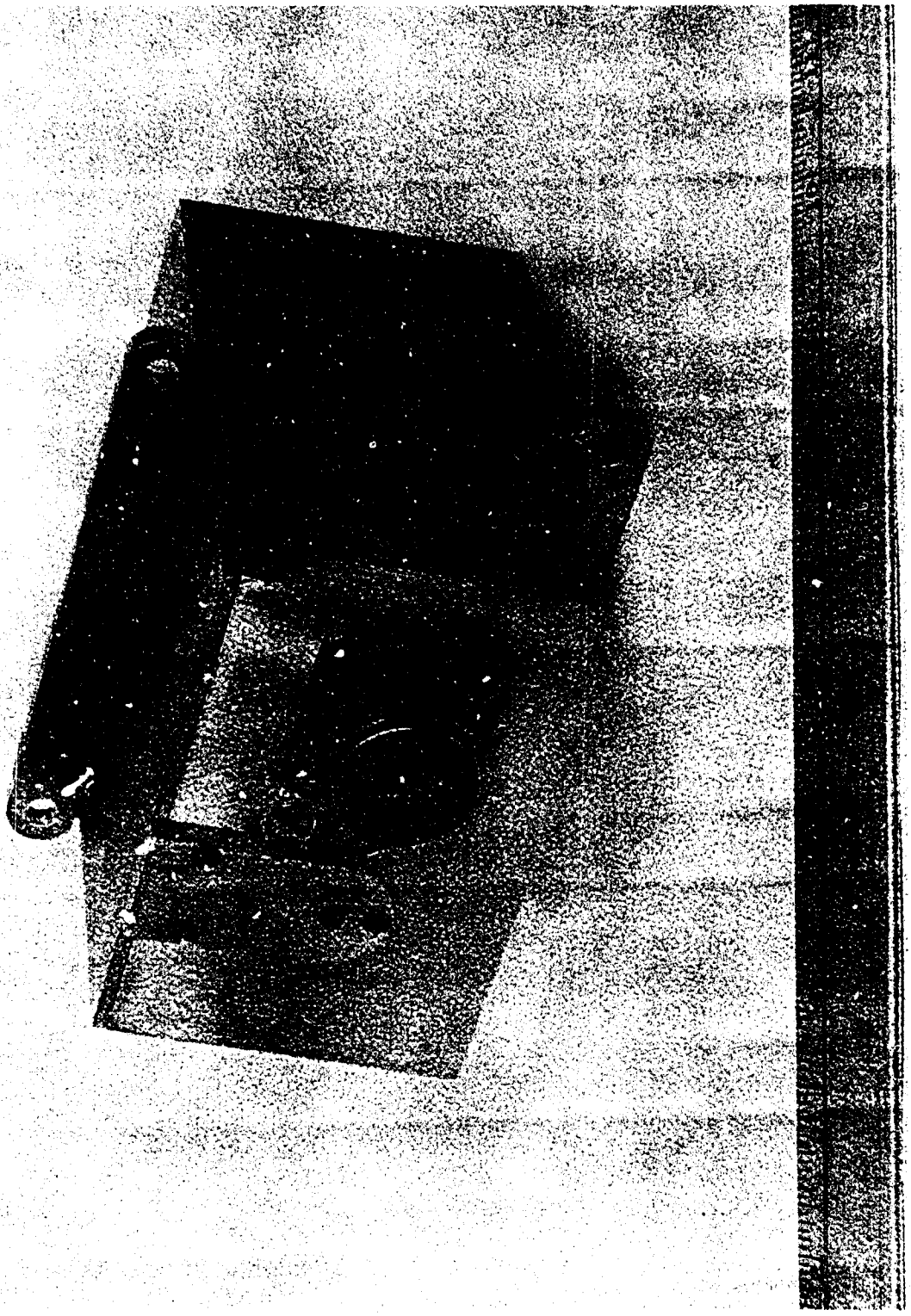

Plate 3. -- Acceleration Integrator XMC-492 for DEMIJOHN.
(A variable mass setting velocity system allows this unit to integrate impulses from 49.6 g-sec to 70 g-sec in three finite settings)

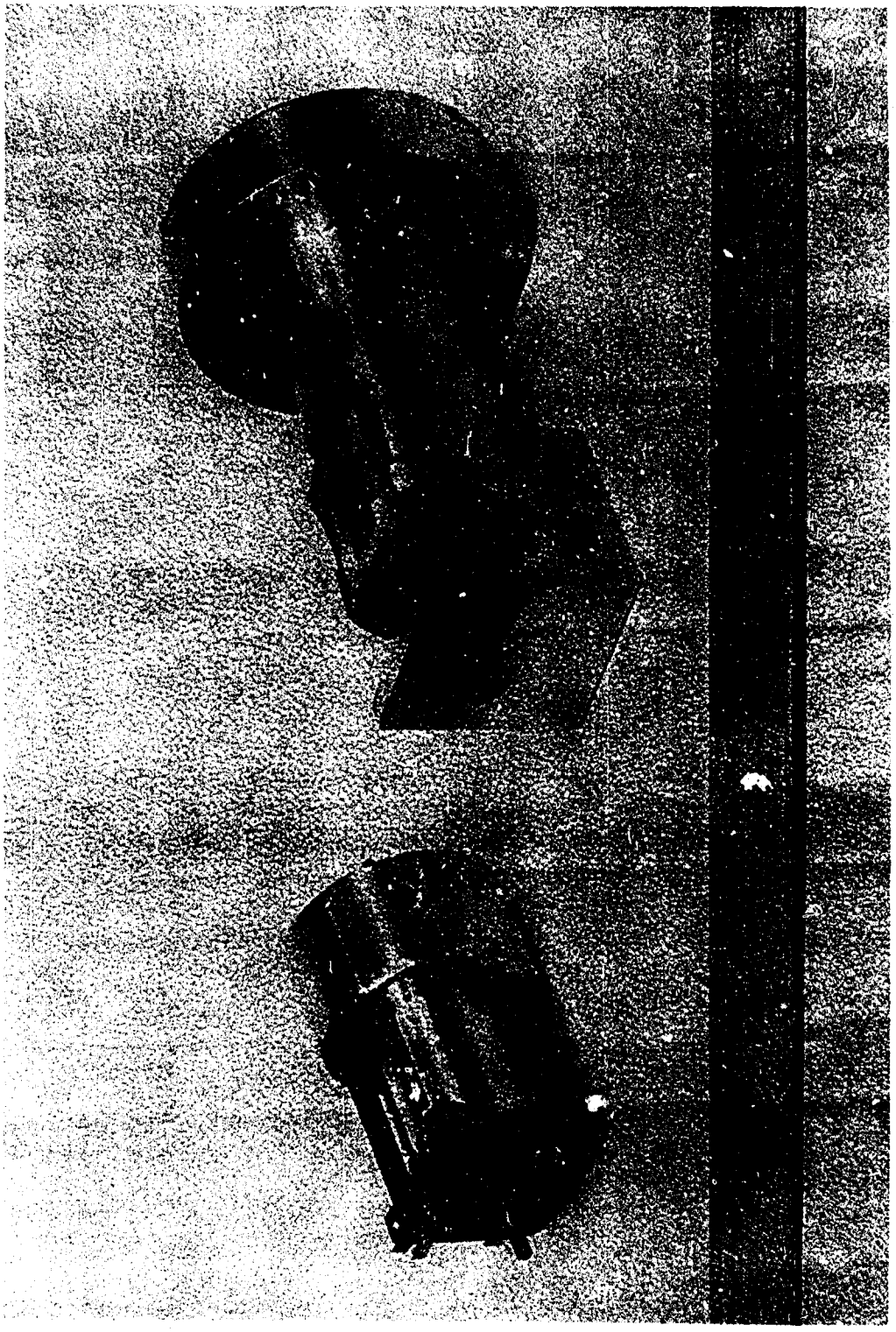

Plate 4. -- Integrating element for miniaturization of XMC-499 (left) together with the original element.

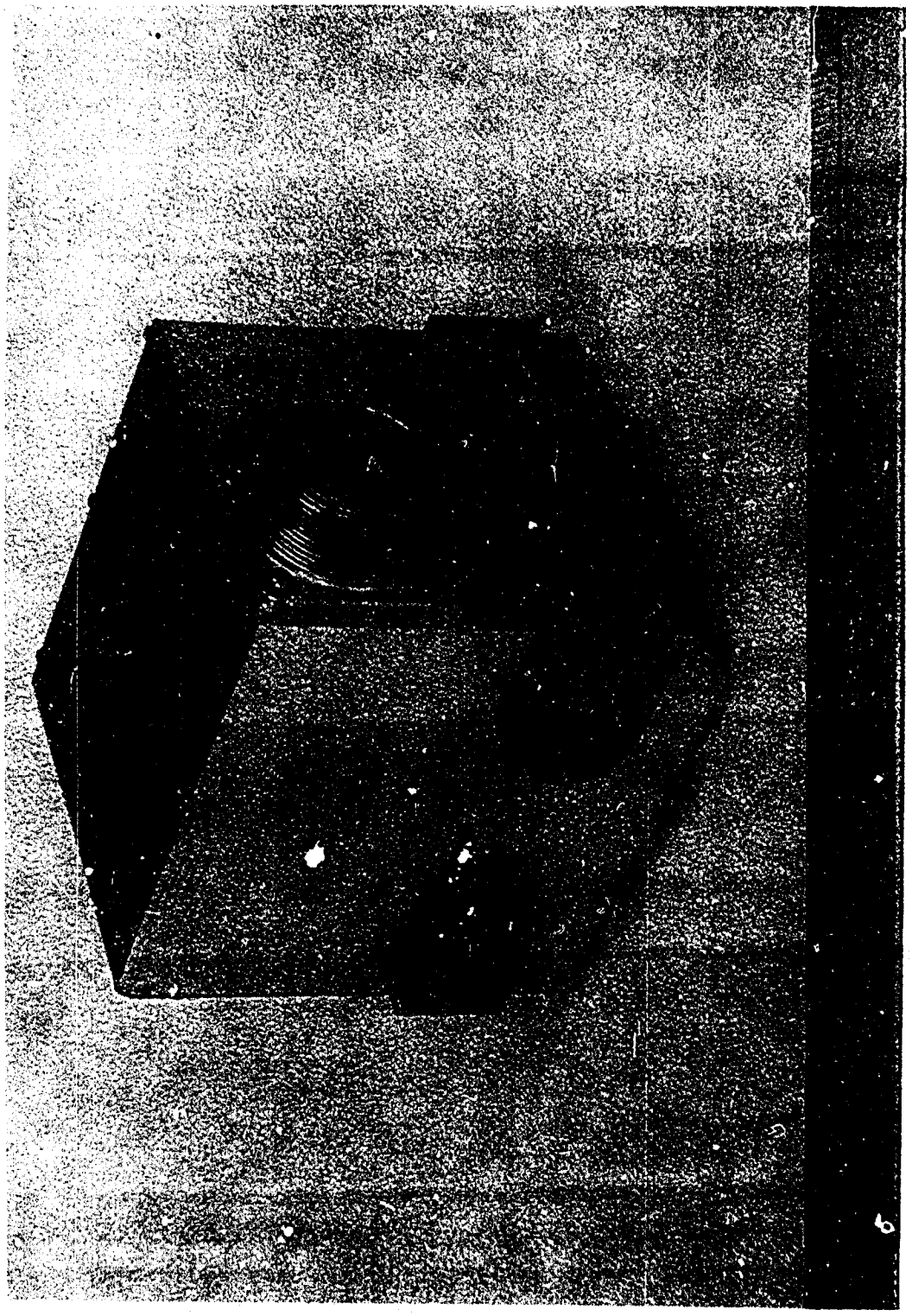

Plate 5. -- Acceleration Integrator XMC-491A.
(Two integrating elements shown in Plate 4 give dual channel integrating within the same cubage as XMC-492 and XMC-497)

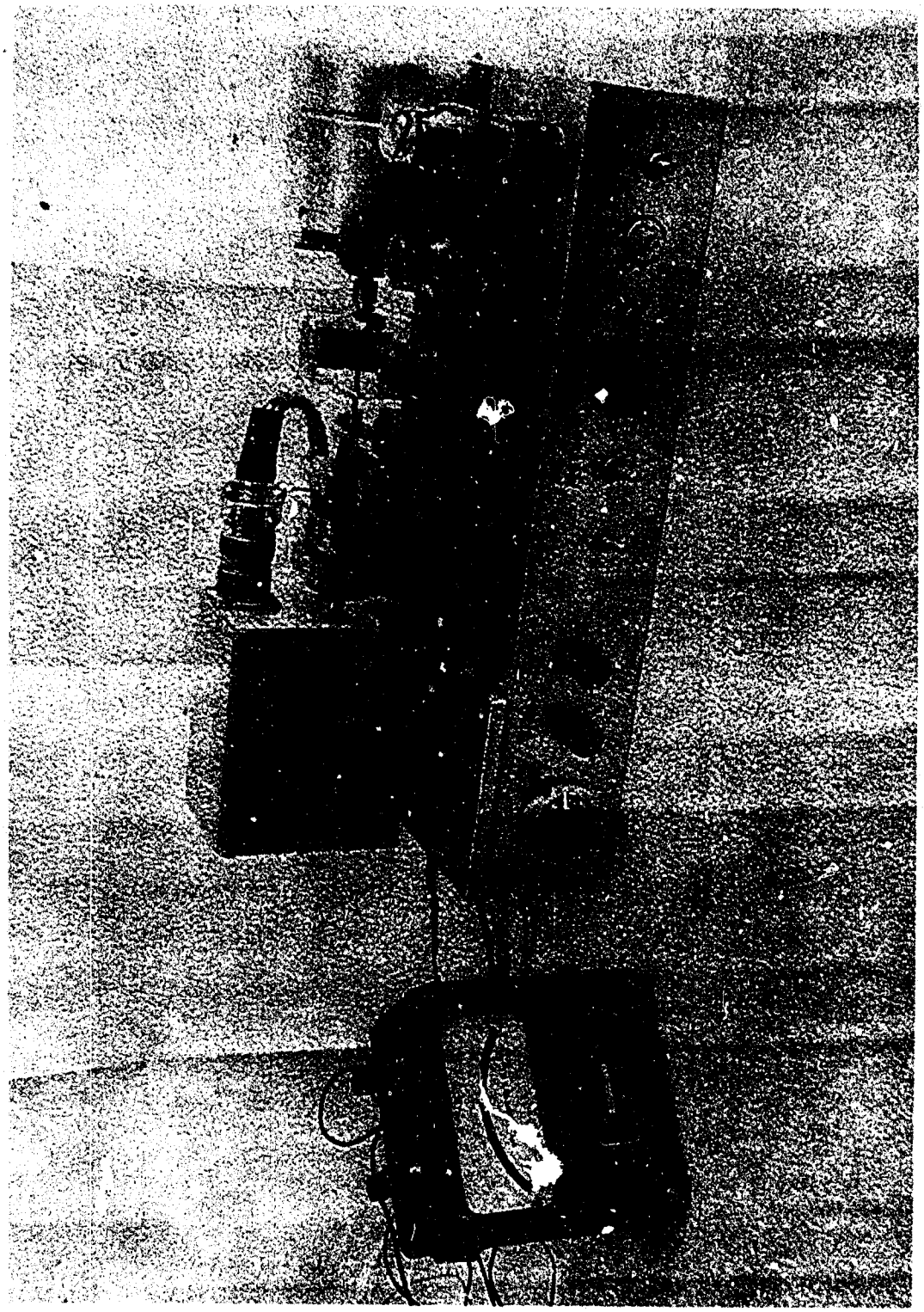

Plate 6. -- Breadboard Model of Tester XT-238

Ref. Sym 1923 (219)

UNCLASSIFIED

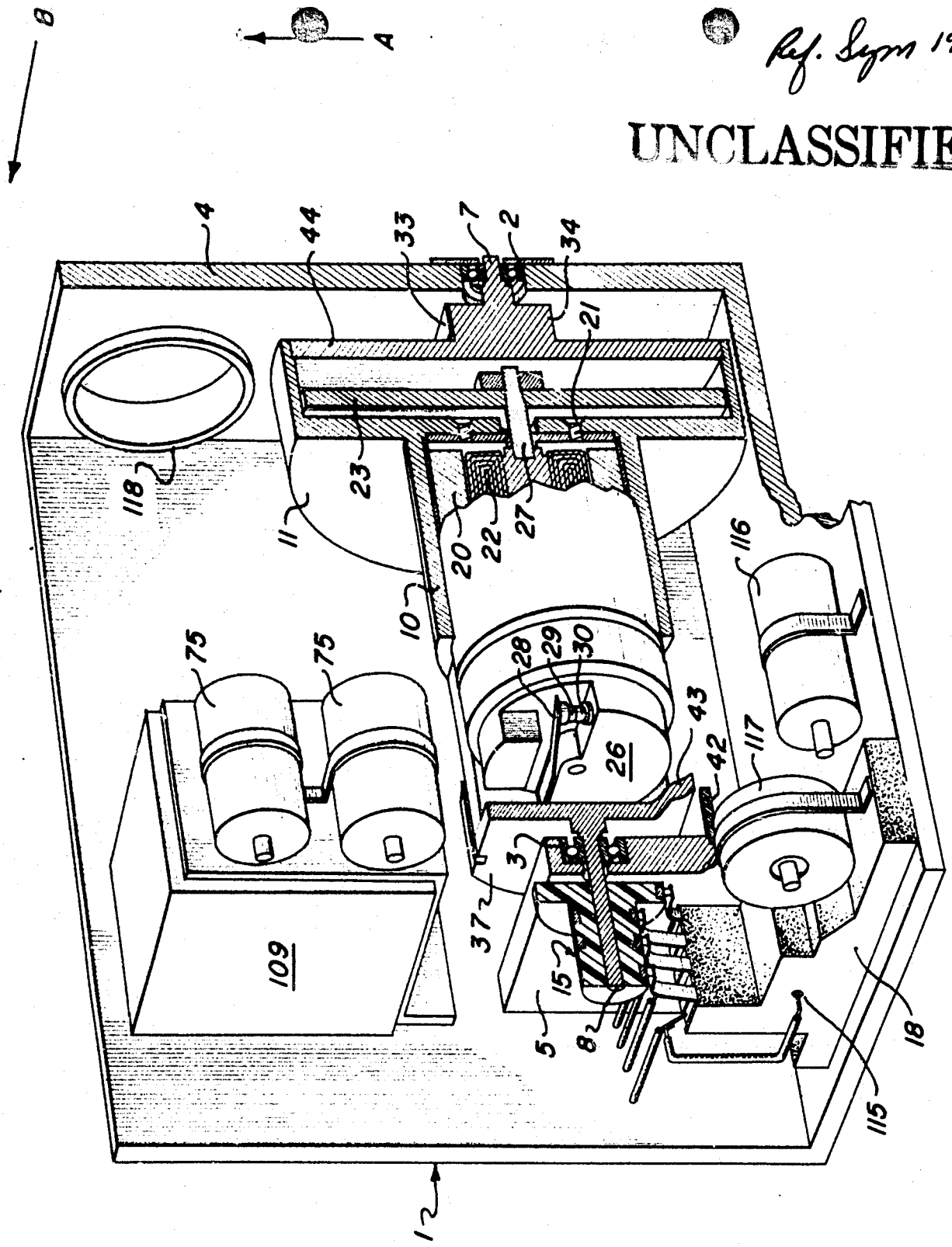

Fig. 1

UNCLASSIFIED

UNCLASSIFIED

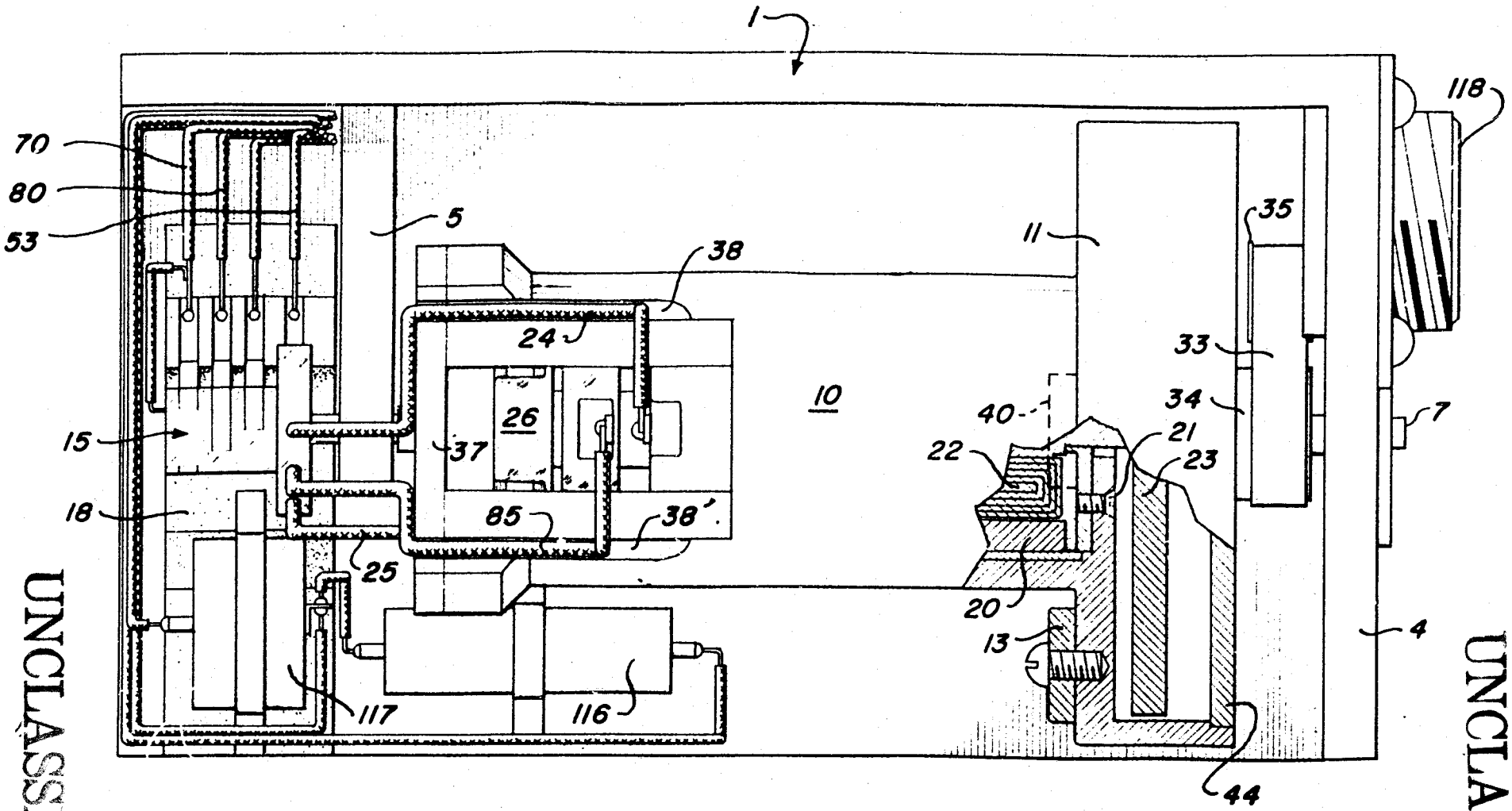

Fig. 2

UNCLASSIFIED

Ref bgm 1923 (2/7)

20

Ref Sym 1923(219)

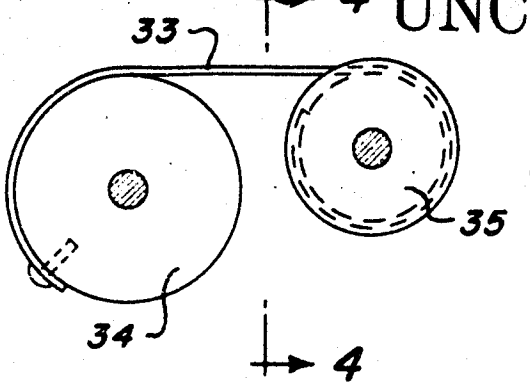

Fig. 3

Fig. 4

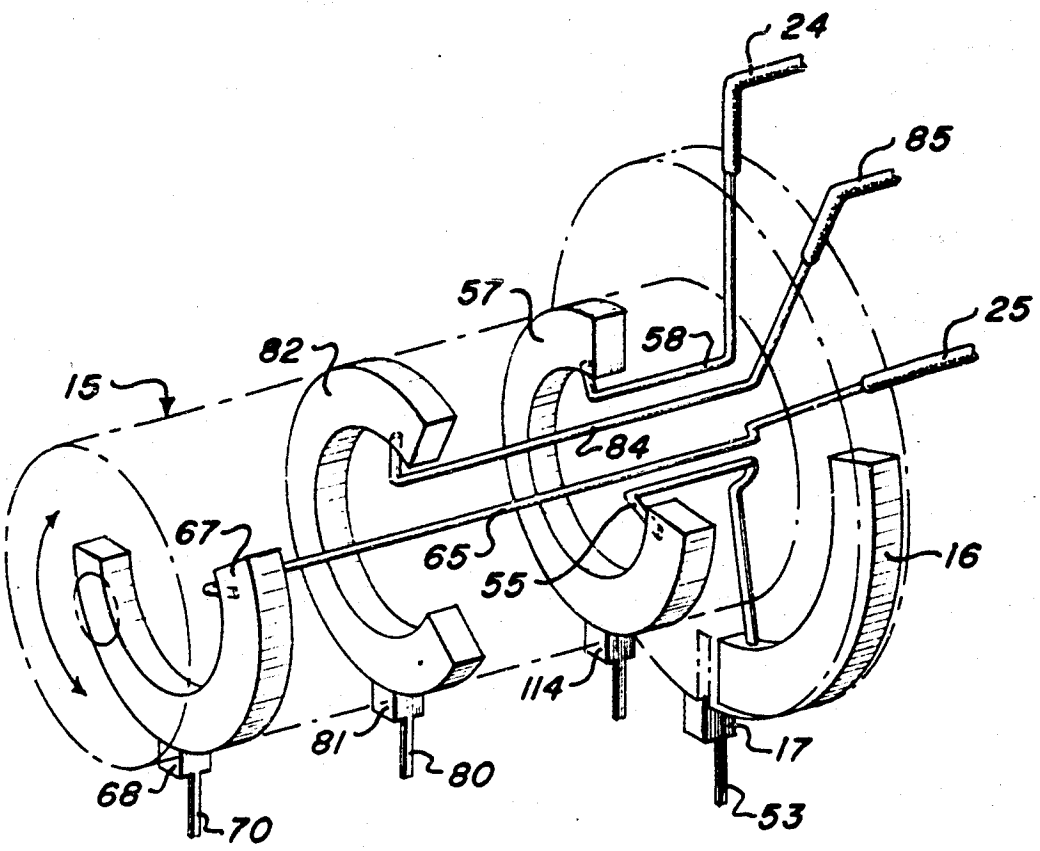

Fig. 5

Ref Sym 1923(219)

UNCLASSIFIED

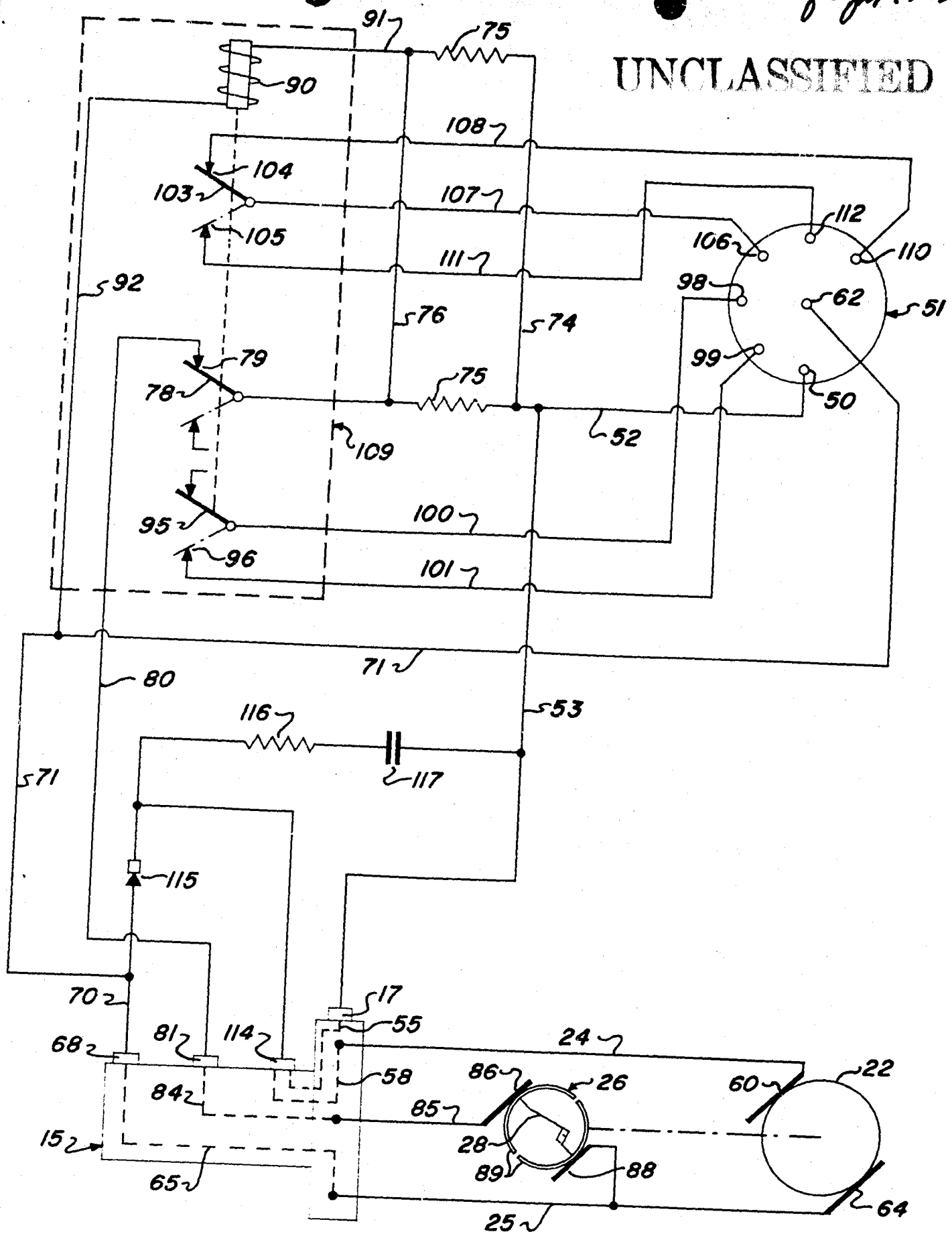

UNCLASSIFIED

Fig. 6