[redacted]

UNCLASSIFIED

Technical Memorandum

[redacted]

1st Review Date: 11-13-81 Authority: ☐ ADC ☒ ADD CCRP-RR Name:	Determination (Circle Numbers): 1 Classification Retained 2 Classification Changed to: U 3 Contains No DOE Classified Information 4 Coordinate With: 5 Contains UCAI? 6 Comments:
2nd Review Date: 4-29-97 Authority: ADD Name: W. Layne	

156-56-14

THE EDDY CURRENT VELOCIMETER

An Inertially Operated Speed Measuring Device

R. G. Rickey

1451-3

SANDIA SYSTEMATIC DECLASSIFICATION REVIEW DOWNGRADING OR DECLASSIFICATION STAMP	
CLASSIFICATION CHANGED TO: U Emelda Selph 5/5/97 PERSON CHANGING MARKING & DATE Carmela M Gallegos 5/5/97 PERSON VERIFYING MARKING & DATE	AUTHORITY: W. C. Layne RECORD ID: 97SN1677 DATED: 4-29-97

ABSTRACT

This report presents the results of an investigation of an inertially operated speed measuring device which employs eddy current damping. Theoretical considerations are given to design, operation, and errors. The description and test results of a prototype design are included.

[redacted]

Case No. 435.01

UNCLASSIFIED

August 8, 1958

[redacted]

[redacted]

UNCLASSIFIED

DISTRIBUTION:
R. W. Henderson, 1200
L. A. Hopkins, 1400
J. R. Townsend, 1600
W. C. Scrivner, 1210
J. P. Cody, 1220
L. E. Hollingsworth, 1240
W. J. Howard, 1250
L. D. Smith, 1260
C. H. DeSelm, 1280
J. H. Findlay, 1450
J. I. Hegge, Jr., 1470
W. E. Treibel, 1246
R. P. Stromberg, 1473
A. E. Winblad, 1473-1
R. K. Smeltzer, 7222-2
A. D. Pepmueller, 7223 (6) [redacted]

UNCLASSIFIED

[redacted]

TABLE OF CONTENTS

	Page
INTRODUCTION	4
OPERATION	4
Physical Description	5
Accuracy	5
Advantages	7
DESIGN CONSIDERATIONS OF THE VELOCIMETER	7
Temperature Error	10
Friction Error	11
Inertia Error	13
Error Calibration	15
PROTOTYPE VELOCIMETER	16
SUMMARY	22
APPENDIX - The Derivation of the Operating Principle of the Eddy Current Velocimeter	24
A. Operating Equation	24
B. Determination of the Eddy Current Damping Constant	28

[redacted]

UNCLASSIFIED

THE EDDY CURRENT VELOCIMETER

An Inertially Operated Speed Measuring Device

INTRODUCTION

The eddy current velocimeter is a self-contained inertial device that provides a switch closure upon reaching a preset speed. It requires no external information or power for operation. Strictly speaking, the velocimeter is sensitive to accelerations along one of its axes and measures the acceleration impulse in the direction of the sensitive axis. When properly attached to an accelerated vehicle, the device can be used to measure vehicle speed.

This report describes in mathematical and physical terms the operation of the velocimeter, the inherent errors associated with it, and methods of controlling these errors. One velocimeter unit has been constructed and tested. The description of the unit and significant test results are included to demonstrate the actual feasibility of the device.

OPERATION

The velocimeter operates on the principle that the displacement of a viscously restrained mass is proportional to the product of the displacing force and the time during which the force is acting. If the displacing force results from an acceleration of a vehicle, it follows that the displacement of the mass would be proportional to the product of acceleration and time, which is velocity.

The viscous restraint used in the velocimeter is produced by eddy currents. The displacing force causes a conducting cup to rotate in the field of a permanent magnet. The eddy currents induced in the cup set up a magnetic field in opposition to the field of the magnet. The opposing force between the two fields is proportioned to the velocity of the rotating cup. This type of restraint is used in domestic watt-hour meters. Basically, the velocimeter and watt-hour meter differ only in the manner by which the driving force is obtained. In the former, the driving force results from an acceleration, while in the latter the driving force is produced by the action of an induction motor.

UNCLASSIFIED

[redacted]

UNCLASSIFIED

Physical Description

The eddy current velocimeter, shown schematically in Fig. 1, consists of a mass geared to an eddy current drag cup such that a linear motion of the mass imparts a rotary motion to the cup. A step-up gear ratio between the mass and drag cup increases the mass damping, permitting a shorter mass travel. This makes possible a device with a smaller volume than would be possible without the use of gears. In each of its extreme positions, the mass operates a switch. One switch indicates the device is set in the preoperated, or safe position, and the other provides an arming or fuzing signal after the vehicle has reached a certain speed. As a safety feature, the mass must experience a minimum acceleration before it is unlatched from its preoperated position.

In use, the velocimeter is attached to the vehicle so that the axis along which the mass travels is parallel to the longitudinal axis of the vehicle with the preoperated position of the mass being forward in the velocimeter. When the vehicle begins to travel with the minimum acceleration necessary to unlatch the mass, the mass, due to its inertia, begins traveling toward the rear of the device. As long as the vehicle experiences acceleration, the mass continues traveling until it closes the switch indicating that a particular speed has been reached.

Accuracy

As to be shown in the following development, the accuracy in speed measurement by the velocimeter is degraded by the effects of temperature variation, friction, and inertia. The magnitude of the error resulting from these effects is also dependent upon the characteristics of the vehicle system. Thus, a vehicle system would have to be specified before a statement of accuracy could have precise meaning.

A prototype model of the velocimeter has been constructed. If applied to a vehicle which has accelerations of 10 to 30 g, the device will measure a speed of 1600 ft/sec accurately within 10.2 per cent if operated at any temperature between -65° and +165°F. A two-channel model having the same accuracy and g range would occupy a volume of approximately 60 cu in.

UNCLASSIFIED

UNCLASSIFIED

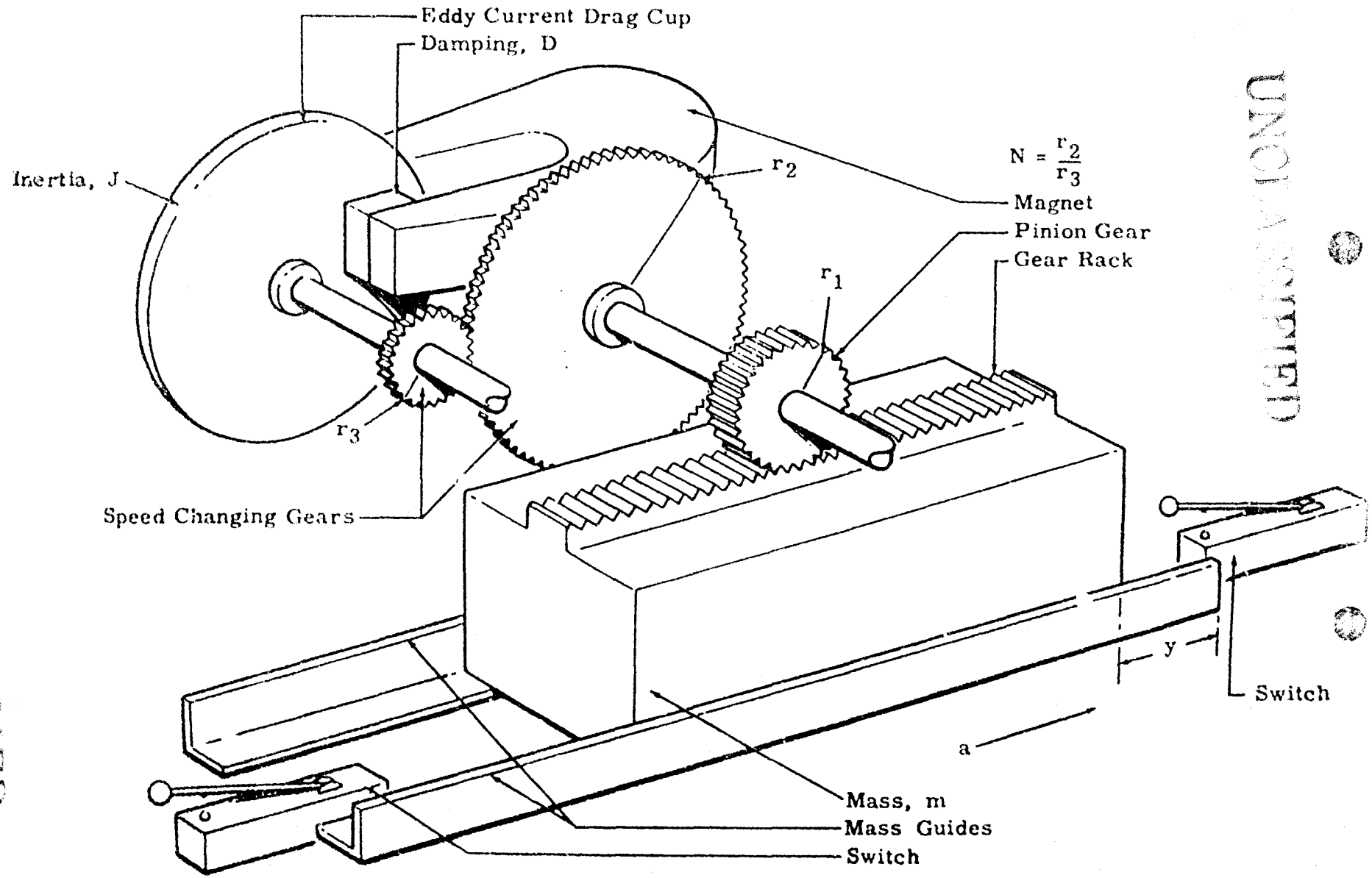

SCHEMATIC DIAGRAM OF EDDY CURRENT VELOCIMETER
Figure 1

UNCLASSIFIED

For many vehicle systems, the temperature error will be a large part of the total error. If temperature compensation had been employed, the prototype velocimeter would have been accurate within approximately five per cent for the system specified. If greater accuracy were required, friction compensation could be employed, and the inertia error could be designed to be smaller. It appears that the lower limit on errors is approximately 1-2 per cent. Without temperature or friction compensation, a device accurate within ten per cent in many vehicle systems is readily obtainable.

Advantages

The eddy velocimeter has the following advantages:

1. Requires no electrical power for operation.

2. Higher accuracies than most devices of the same complexity and size.

3. Low probability of premature operation because of its mechanical configuration and the fact that the operation is completely inertial and not dependent upon the electrical system of the vehicle.

4. Small size. The prototype unit has a volume of 50 cu in. Because of the mechanical configuration, a dual-channel version of the prototype could be packaged in essentially the same volume.

5. Reliability. Due to the simple mechanical configuration of the device, its operation is very reliable.

DESIGN CONSIDERATIONS OF THE VELOCIMETER

The design of a velocimeter having the general configuration of Fig. 1 requires a knowledge of the application in which the design will be used. In general, the design problem is one of minimizing errors to an acceptable value while keeping the volume of the unit sufficiently small. The following discussion shows how the effects of temperature, friction, and inertia contribute to the error of the device and how the design of the velocimeter for a particular application is governed by accuracy requirements.

The equation expressing the motion of the mass in the system in Fig. 1 for a constant vehicle acceleration and the condition $ma > F_F$* is:

$$y = \frac{m}{\frac{N^2}{r_1^2} D} v_m - \frac{F_F}{\frac{N^2}{r_1^2} D} t - \frac{\left(ma - F_F\right)\left(m + \frac{N^2}{r_1^2} J\right)}{\left(\frac{N^2}{r_1^2} D\right)^2} \left[1 - e^{-\frac{D}{J + \frac{r_1^2}{N^2} m} t}\right] \qquad (1)$$

In this equation, D is the eddy current damping and is the ratio of restraining torque to angular velocity of the eddy current drag cup. Its value is expressed by the equation+:

$$D = \frac{B^2 A r_4^2 c}{k_\rho} \qquad (2)$$

where the symbols of Equations 1 and 2 have the following meanings:

y = displacement of the mass with respect to its housing,

m = mass,

N = gear ratio, $\frac{r_2}{r_3}$,

r_1 = radius of pinion gear engaging the mass,

v_m = vehicle velocity,

F_F = effective force acting on the mass due to friction of all the bearings and gears,

t = time,

a = vehicle acceleration,

J = moment of inertia of the eddy current drag cup and its shaft,

B = flux density of the magnet gap,

A = total effective gap area,

---

* The condition, $ma > F_F$, is imposed upon Equation 1 because it is necessary for the force acting on the mass due to vehicle accleration to be larger than the effective friction force before the velocimeter can be set into motion.

+ For the derivation of these equations refer to the appendix.

UNCLASSIFIED

r_4 = radius of the eddy current drag cup,

c = thickness of the eddy current drag cup,

k = a constant accounting for the resistance of the return eddy current path,

ρ = electrical resistivity of the eddy current drag cup material, and

e = the Napierian base.

Ideally the mass displacement, y, would be proportional to and dependent only upon vehicle velocity. Under this ideal condition, the right side of Equation 1 would contain only the first term, and further, all quantities in the first term would be constants except, of course, the vehicle velocity, v_m. However, due to friction and inertia, the second and third terms, respectively, appear in the equation, and due to temperature variations, the quantities which multiply v_m are not all constants. Thus, the design of a velocimeter for a particular application must be such that the total error resulting from friction, inertia, and variations in temperature is made sufficiently small to satisfy the accuracy requirements of the application.

Neglecting the second and third terms which must be made small for accuracy reasons, some design information can be obtained by considering only the first term. Usually the maximum mass travel, y, will be determined by the permissible length of the velocimeter package. The known vehicle velocity, v_m and y, determine the ratio of mass, m, to mass damping, $\frac{N^2}{r_i^2} D$. The volume of the unit increases with m and D. It might seem then that the design would be completed by choosing the mass and mass damping small for minimum volume and in the proper ratio to give the desired mass displacement for a given vehicle velocity. However, as shown in the error analysis below, the friction and inertia errors have an inverse relationship to m and D. Therefore, the ratio of mass-to-mass damping must be chosen to satisfy length requirements, and the magnitude of m and D must be chosen to satisfy accuracy requirements.

The error effects will now be considered to demonstrate how the parameters are determined by accuracy requirements.

UNCLASSIFIED

Temperature Error

An error in velocity measurement occurs because the damping D is not constant with temperature. In Equation 2, all quantities which determine the value of D except the resistivity of the drag cup material, ρ, may be considered constants over the temperature range -65° to $+165^{\circ}$F. Because the damping D is inversely proportional to the resistivity, it is desirable to choose a drag cup material having a low resistivity to obtain high damping. Also, to make the variation of D with temperature small, it is desirable to choose a drag cup material having a low-temperature coefficient of resistivity. Both of these desirable characteristics cannot be satisfied because materials having low resistivities also have high-temperature coefficients of resistivity. For example, if copper or aluminum were chosen for the drag cup material because of their low resistivity, it would be found that their resistivities at $+165^{\circ}$F would be approximately 50 per cent greater than at -65°F. Thus, though the damping would be high with copper or aluminum, the change in resistivity with temperature would be large and would cause a correspondingly large error in speed measurement. If calibrated to operate at the midrange temperature, a velocimeter using a copper or aluminum drag cup would indicate a speed 25 per cent too high if operated at $+165^{\circ}$F and 25 per cent too low if operated at -65°F. For a reasonably small temperature error then, it is necessary to select a compromise material or, as an alternative, select a low-resistivity material and apply temperature compensation to the velocimeter.

There are some alloys which provide a reasonable compromise between resistivity and temperature coefficient of resistivity for many applications. One such alloy having the composition beryllium, 1.80-2.05 per cent, cobalt, 0.18-0.30 per cent, copper-balance,* was chosen for the drag cup material in the prototype unit constructed. The theoretical maximum velocity measurement error due to the temperature change of this material is approximately ± 5.75 per cent. The damping obtained with this material is approximately one-quarter of that obtainable with pure copper. As a result, the size of the magnet required for a given value of

* This material has the trade name Berylco 25 and is produced by the Beryllium Corporation, Reading, Pennsylvania.

damping is approximately four times as great as would be required for a similar drag cup made of copper. In most designs, this would necessitate a greater velocimeter volume.

As an alternative to selecting a compromise material for the drag cup, the velocimeter can be compensated for the temperature effect. This involves controlling some other quantity in the equation of operation with temperature in a manner to offset the effect of a corresponding change in resistivity. By using a bimetallic metal, the magnet gap length and thus the flux density may be caused to vary with temperature. In a similar manner, the effective drag cup radius at which the gap appears may be controlled. Probably the simplest method to temperature-compensate the velocimeter is to control the distance the mass must travel to operate the switch. This can be accomplished by mounting the switch or the switch actuator on a bimetallic strip of metal. If the temperature increased, the mass would have to move further to operate the switch, offsetting the effect of the decreased damping due to the temperature increase.

The requirement imposed upon the bimetallic strip to do its compensating job would be that its deflection-temperature characteristic match nearly the resistivity-temperature characteristic of the drag cup material. This does not appear to be a difficult requirement to meet because both relationships are approximately linear. The reduction of temperature error resulting from compensating the mass travel would be approximately tenfold. Using a drag cup made of aluminum or copper, the velocity measurement temperature error would then be approximately $\pm 2\text{-}1/2$ per cent over the temperature range. Temperature compensation would not significantly increase the volume of the velocimeter.

Friction Error

The term $\frac{F_F}{N^2/r_1^2 D} t$ in Equation 1 represents the error in mass displacement due to the effective friction force acting on the mass. To make the friction error small, it is necessary to make this term small compared to the first term, which represents the ideal relationship for the mass displacement. Expressed as a fraction of the first term the friction error, E_F, is:

UNCLASSIFIED

$$E_F = \frac{-\dfrac{F_F}{\dfrac{N^2}{r_1^2} D} t}{\dfrac{ma}{\dfrac{N^2}{r_1^2} D} t} = -\frac{F_F}{ma}$$

where $at = v_m$.

It can be seen that to make the friction term small compared to the first term, it is necessary to make the force F_F small compared to the force ma. The first step to accomplish this would be to make F_F small by selecting precision-made gears and bearings having low-friction characteristics. A mass value would then be chosen for the particular acceleration application such that the value of the second term compared to the first would be small enough to make the friction error acceptable.

It should be noted that increasing the mass has the disadvantage of increasing the mass displacement, thus the volume of the unit, for a given vehicle velocity, v_m, and damping, D. Of course, it would be possible to offset the increased displacement by increasing the damping but this would require a larger magnet and thus also increase the volume of the unit. Thus, if minimum volume is desirable, the mass should be chosen just large enough to reduce the friction error to an acceptable value.

The friction error may also be decreased by applying a compensating force to the mass having approximately the same value as the friction force and acting in opposition to it. If F_c is the compensating force, the friction error term would then take the form

$$-\frac{F_F - F_c}{\dfrac{N^2}{r_1^2} D} t$$

and would be reduced considerably, depending on how nearly F_c equals F_F. If the spring force were 90 per cent as great as the friction force, the compensated friction error would be 10 per cent as great as the error without compensation.

UNCLASSIFIED

The compensating force could be supplied by a suitable spring attached between the mass and the case of the velocimeter. The requirement imposed upon the spring would be that its force be nearly equal to the friction force and be constant with displacement. Such springs are commercially available in large variety.*

This type of compensation would probably be useful only in applications where the vehicle acceleration is in only one direction, at least until the velocity switch is closed. If the device were required to integrate acceleration in two directions, the unidirectional compensating force would produce a detrimental effect by adding to the friction force in one or another of the directions. However, many vehicle systems are of such a nature that a compensating spring could be employed to advantage.

Inertia Error

The third term in Equation 1 represents the error in mass displacement due to the inertia of the system. To make the inertia error small, it is necessary to make the third term small compared to the first term which expresses the ideal relationship for the mass displacement. Expressed as a fraction of the first term the inertia error, E_J, is

$$E_J = - \frac{\dfrac{\left(ma - F_F\right)\left(m + \dfrac{N^2}{r_1^2} J\right)}{\left(\dfrac{N^2}{r_1^2} D\right)^2} \left[1 - e^{-\dfrac{D}{J + \dfrac{r_1^2}{N^2} m} t}\right]}{\dfrac{ma}{\dfrac{N^2}{r_1^2} D} t} .$$

A more useful expression for the inertia error results if the following assumptions are made:

* One firm producing constant force springs with the trade name "Neg'ator" is the Hunter Spring Company, Lansdale, Pennsylvania.

1. The time of operation, t, will always be long compared to the time constant $\frac{J + r_1^2/N^2\, m}{D}$ of the system. (This reduces the bracketed term to unity.)
2. The friction force, F_F, is small compared to the force ma. (This is necessary for friction error reasons.)
3. The mass m is small compared to $\frac{N^2}{r_1^2} J$. (This will be generally true due to the large gear ratio N.)

Making these assumptions, an approximate expression for the inertia error is:

$$E_J = - \frac{\dfrac{ma \dfrac{N^2}{r_1^2} J}{\left(\dfrac{N^2}{r_1^2} D\right)^2}}{\dfrac{ma}{\dfrac{N^2}{r_1^2} D} t} = - \frac{J}{Dt} \quad .$$

The ratio, $\frac{J}{D}$, is recognized as the mechanical time constant of the eddy current drag cup. The maximum permissible value of $\frac{J}{D}$ is determined by the allowable inertia error and the minimum time of operation required of the device. Once the value has been determined, it is necessary to choose J and D such that the permissible value is not exceeded.

It would appear that the time constant of a drag cup of a given material could be made small by making the cup's thickness and radius, and thus inertia, small. However, both the damping and inertia are proportional to the cup's thickness and to the square of the cup's radius so that decreasing the inertia of the cup by decreasing its dimensions also decreases the damping by the same proportion. Thus, the time constant of the drag cup is independent of the drag cup dimensions.

It might also seem that the inertia of the cup, and thus the time constant, would be made small by making the cup of a low-density material. However, the resistivity of the material also affects the damping so that the time constant may or may not be made small by the choice

of a low-density material. It happens that the resistivity and density of aluminum compared to copper, for example, are such that the time constant of an aluminum cup would be smaller than a copper cup of the same configuration. Considering the inertia error alone then, aluminum would make a better drag cup than would copper.

It should be noted that the friction force, F_F, appears in the inertia error term. Its presence can be explained by a consideration of energy. The work done on the mass is equal to the product of the force ma acting on the mass multiplied by the distance the mass is displaced. Ideally, this energy would be dissipated in the heating of the drag cup by the eddy currents. However, some of the energy is taken to overcome the friction force, and some is stored as kinetic energy in the rotating drag cup. The fractional inertia error could have been expressed as the ratio of the kinetic energy stored to the work done on the mass. The effect of the friction force is to cause the angular velocity of the cup, and thus its kinetic energy, to be less than it would be if the friction force were not present. Thus, the inertia error is partially determined by the effective friction.

Further, considering the operation of the velocimeter from an energy standpoint, it is obvious that if the device were subjected to a constant acceleration until the drag cup reached its steady-state velocity and then the acceleration suddenly cut off, the cup would continue to rotate until its kinetic energy had been absorbed by the eddy current damping and friction. If the kinetic energy is allowed time to so dissipate, the ratio of kinetic energy to the work done on the mass reduces to zero. Thus, the inertia error, as represented by the energy ratio, will reduce to zero if given enough time after acceleration ceases. In other words, the inertia error may be considered as time lag error in measurement, and if it is not important to provide a speed indication at the exact instant the speed occurs, the time lag would not be considered an error at all.

Error Calibration

If the friction and inertia error terms in Equation 1 were constants, it would only be necessary to correct the mass displacement by an amount equal to the sum of the error terms

to have the switch close at the required vehicle speed. However, these terms are not constants, the friction error varies with time, and the inertia error varies with acceleration and time. Thus, the value of applying a calibration for friction and inertia errors is dependent upon how well the acceleration-time relationship of the vehicle is known.

Calibration of the device would include a correction to the mass displacement for friction and inertia errors. A constant acceleration would be applied to the mass and the mass travel adjusted to close the switch after the acceleration had been applied for the proper time interval to simulate the required speed. Thus, if operated at this one acceleration, the switch will close at the correct speed. If operated at any other acceleration, the error terms assume values different from those calibrated for, and as a result the switch will not close at exactly the correct speed. Small variations in acceleration and time cause small variations in the error terms, resulting in second order errors in the speed measurement by the velocimeter. Furthermore, because the time required to reach a given velocity is inversely proportional to the acceleration, it can be seen from Equation 1 that the variations in the error terms, resulting from variations in acceleration and time, tend to cancel.

PROTOTYPE VELOCIMETER

The prototype velocimeter, shown in the photographs of Fig. 2 and Fig. 3, is 5 inches long, 2-3/4 inches wide, and 3-1/2 inches high which gives it a volume of approximately 50 cu in. The switches and mass latching mechanism, located below the mass, are not visible in the photographs. If required, a two-channel version of the prototype unit could be packaged in a volume of approximately 60 cu in. The unit was constructed to test the actual feasibility of the device and not to meet requirements of a particular program.

The prototype unit was tested statically at temperatures of -65°, 0°, +72°, and +165°F to observe the effect temperature has on the operating speed. The curves of Fig. 4 were obtained from the test data and show the relationship between the applied acceleration and the speed required to operate the device for each of the operating temperatures. The plot of

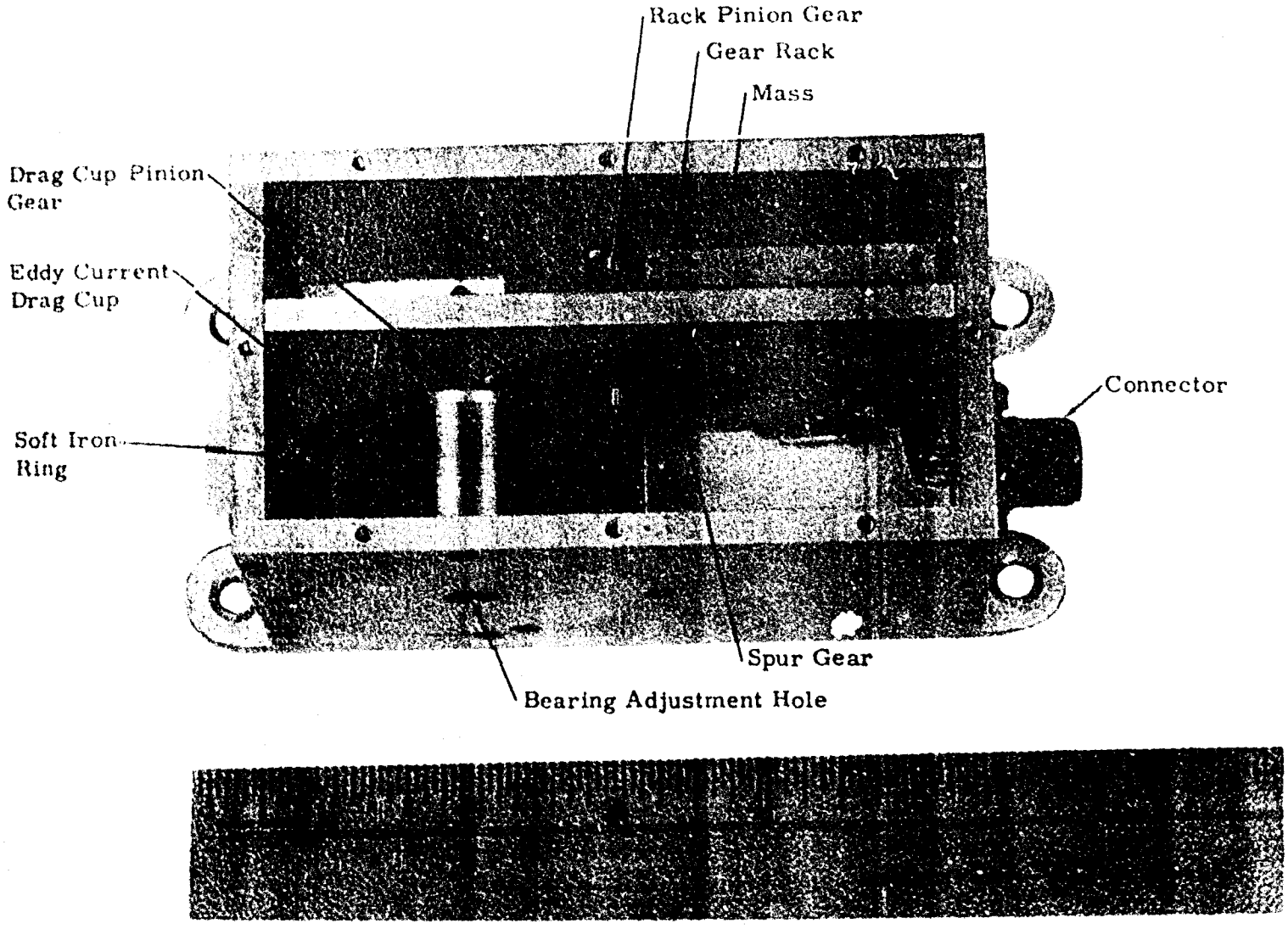

EDDY CURRENT VELOCIMETER

With Top Cover Removed

Figure 2

UNCLASSIFIED

UNCLASSIFIED

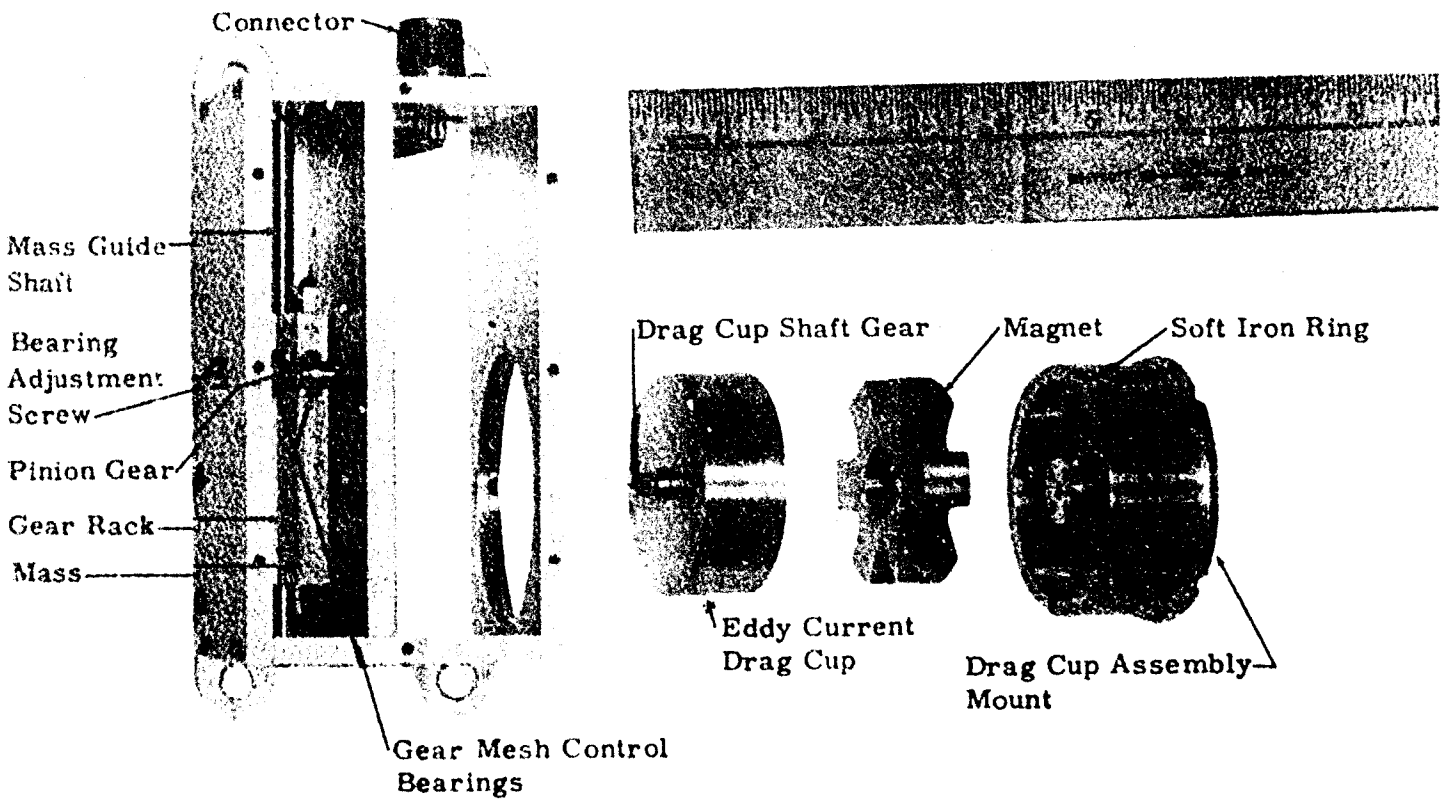

EDDY CURRENT VELOCIMETER
Shown With Top Cover Removed
And Drag Cup Assembly Exploded

Figure 3

UNCLASSIFIED

UNCLASSIFIED

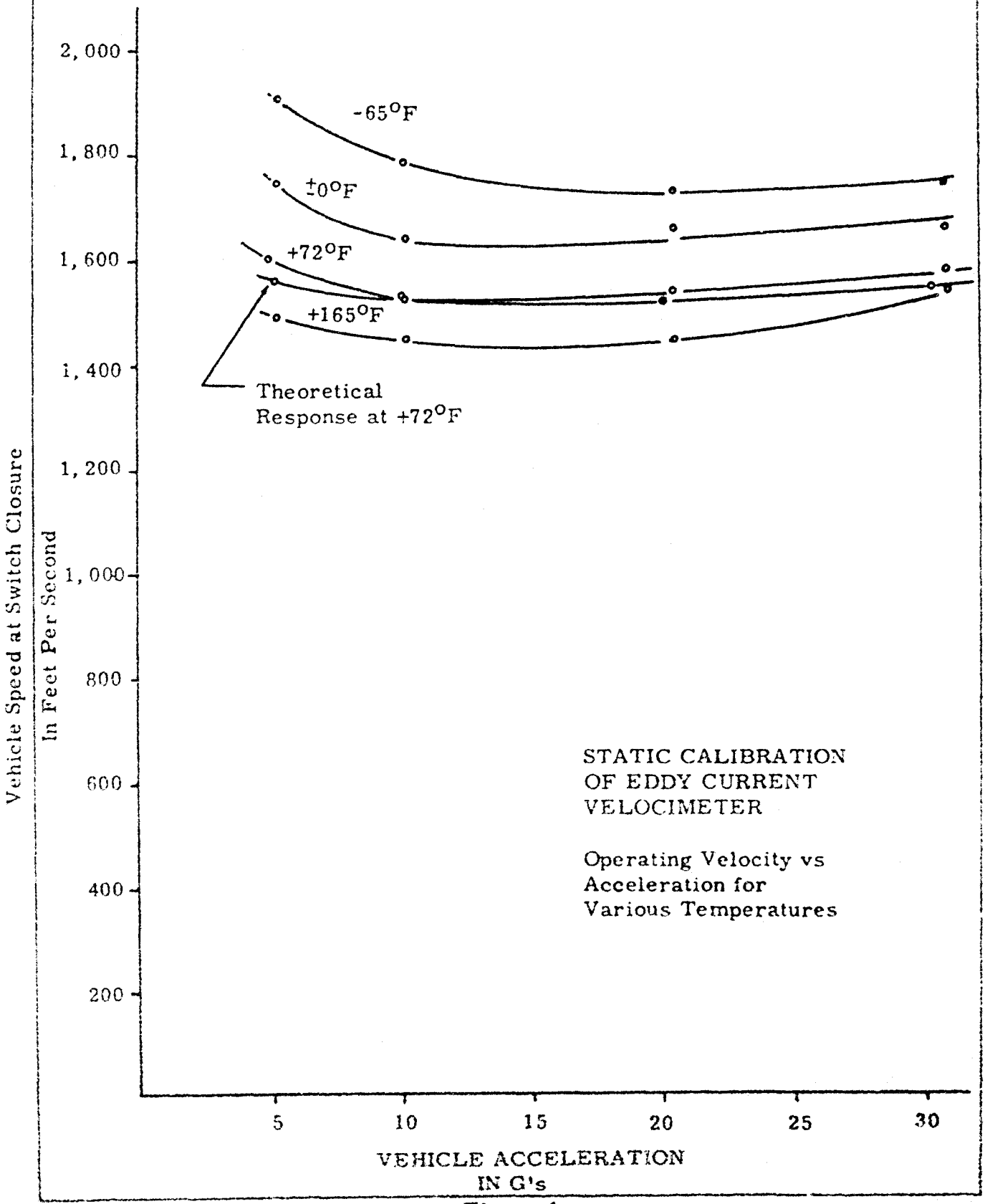

Figure 4

UNCLASSIFIED

an additional curve, which shows the predicted operation of the device at +72°F, also appears in Fig. 4. The points on this theoretical curve were obtained by assuming values of acceleration and solving Equation 1 for the time required to produce a fixed mass displacement. The time so obtained was then multiplied by the assumed acceleration to find the vehicle speed required to operate the device. The validity of Equation 1 is indicated by the similarity between the curve of expected operation and the curves obtained from test data. The parameters used to obtain the expected operation were:

$y = 4.15$ cm

$m = 88$ grams

$n = 0.67$

$r_1 = 0.3175$ cm

$D = 990 \frac{\text{dyne-cm}}{\text{rad/sec}}$

$F_F = 43 \times 10^3$ dynes

$J = 95$ gm - cm^2

It is noticed from the curves of Fig. 4 that the vehicle speed required to operate the device is greater at either low or high accelerations than it is at midrange accelerations. At low accelerations, the time required to reach the operating speed is long, and the friction error, which increases with time, becomes large. To overcome the friction error, a greater vehicle speed is required to produce a fixed mass displacement.

At the higher accelerations, the inertia error increases and causes the mass displacement for a given vehicle speed to be less than it would be for the midrange accelerations. Thus, a greater vehicle speed is required to produce a fixed mass displacement.

Some useful information may be obtained by examination of the curves. The nonlinearity of the curves increases with lower temperatures and is especially noticeable at lower accelerations. This indicates that the effective friction force increases as the temperature is lowered. This is due partly to a tightening of the bearing adjustment due to the difference in coefficients of thermal expansion between the aluminum case and steel shafts and also to condensation upon bearings and gears. Future models would be designed to eliminate the bearing tightening effect and would include hermetic sealing in a dry atmosphere.

It is also noticed that the spacing between curves becomes larger as the temperature is lowered. This indicates that the resistivity of the drag cup material changes more rapidly with temperature as the temperature is lowered. If this is true, the assumption that the temperature coefficient of resistivity is constant can lead to an erroneous estimation of expected temperature error. Because the temperature coefficients of metals are not generally available at the lower temperatures, it would be desirable to experimentally determine the resistivity-temperature characteristics of materials considered for use in the drag cup before a future model is constructed.

At an acceleration of 20 g, the friction and inertia errors are relatively small, and the spacing between curves can be used to obtain the approximate value of the temperature error. At 20 g, the device operates at a speed of 1727 ft/sec at -65°F and 1496 ft/sec at +165°F. If calibrated to operate at midrange speed, the temperature error is ±7.2 per cent in velocity measurement over the temperature range. If a constant temperature coefficient of resistivity is assumed, the theoretically expected error would be ±5.75 per cent.

If applied to a vehicle having an acceleration range of 10 to 30 g, the tests show that the device will operate at some speed between 1451 ft/sec and 1781 ft/sec if operated at any temperature within the range -65° to +165°F. If calibrated to operate at the midvelocity range, 1616 ft/sec, the maximum possible error is ±10.2 per cent.

The prototype unit has successfully passed SCS-7 temperature and vibration tests. The results of dynamic tests on the centrifuge agree with static tests. Thus, simple static tests would be sufficient for calibration and field testing.

The unit is not compensated for friction or temperature variations. Because the temperature error is a large part of the total, it would be expected that temperature compensation would significantly reduce the total error. Temperature compensation should reduce the errors of the prototype unit, for the application specified, to approximately 5 per cent. If compensated for friction and designed to have a smaller inertia error, it is reasonable to expect that the total error in speed measurement, for the system specified, may be made as low as 1-2 per cent.

[redacted]

UNCLASSIFIED

SUMMARY

Speed measurement of an accelerated vehicle is accomplished in the eddy current velocimeter by gearing a rack mass to an eddy current drag cup. Within its accuracy, the displacement of the mass with respect to the vehicle is directly proportional to vehicle speed. It requires no electrical power for operation, has high accuracy for its size and complexity, and has a low premature probability.

The accuracy of the velocimeter is degraded by the effects of temperature variations, friction, and inertia. The error due to temperature results primarily from the change in resistivity of the drag cup material with temperature. Its effect can be made small by selecting a drag cup material having a low-temperature coefficient of resistivity, or by applying temperature compensation. A disadvantage exists in using a material having a low-temperature coefficient of resistivity because such materials have high resistivities and thus produce less damping in a given drag cup assembly. Increasing the magnet size to offset the higher resistivity usually requires a larger velocimeter volume. On the other hand, applying temperature compensation has the advantage of permitting the use of a low-resistivity material, and at the same time yields a lower temperature error than could be expected from the use of a suitable compromise material.

The friction error increases with the time of operation of the velocimeter and can be made small by making the friction forces small compared to the driving force resulting from vehicle acceleration and by supplying a constant force spring to counteract the friction force. Making the driving force large by increasing the mass of the velocimeter is a disadvantage because the volume is necessarily increased also. In applications where volume is a limitation and the vehicle acceleration is unidirectional until the velocity to be measured is reached, the use of a compensating spring is advantageous.

The inertia error increases with acceleration and can be made small by making the damping large compared to the inertia of the drag cup. Making the damping large requires a large magnet and thus had the disadvantage of increasing the volume of the velocimeter. If it

[redacted]

UNCLASSIFIED

is not required of the velocimeter to indicate a particular velocity at the instant the velocity occurs, the inertia error can be considered as a time lag in measurement instead of an error.

A prototype unit has been constructed and tested. Without the refinements of temperature and friction compensation, the prototype has been found to possess a maximum error in speed measurement of approximately ±10 per cent for a hypothetical, though realistic, vehicle requirement. Because the temperature error is by far the largest error in the prototype design, it is reasonable to expect that a similar design utilizing temperature and friction compensation could be made with errors as small as 1-2 per cent for the same vehicle requirements.

R. G. RICKEY - 1451-3

Case No. 435.01
August 3, 1956

APPENDIX

The Derivation of the Operating Principle of the Eddy Current Velocimeter

A. Operating Equation

The equation describing the operation of the velocimeter will be obtained by first considering the various forces acting upon the mass and then equating all these forces and solving for the mass displacement.

Consider the system shown schematically in Fig. 5. A mass, m, supported by a guide is gear-coupled to a shaft and, through a pair of gears, to the eddy current drag cup. The drag cup is represented by an inertia, J, subject to a damping torque, T_{D2}, proportional to its angular velocity, $(\dot{\theta}_2)$.* The forces which act upon the mass resulting in its acceleration with respect to inertial space+ result from, (1) friction, (2) the damping as it appears reflected through the gear train, and (3) the inertia of the drag cup, also as it appears reflected through the gear train.

The friction force, F_F, is taken to be the effective force acting on the mass resulting from friction between mass and guides, frictions between gears, and the friction of all bearing supports.

The damping force acting on the mass is obtained as follows:

The damping constant, D, is defined as the ratio of damping torque to drag cup angular velocity or

$$D = \frac{T_{D2}}{\dot{\theta}_2}$$

* Throughout this development, the dot superscript will be used to denote the derivative of a function with respect to time. Thus, $\dot{\theta}_2$ represents an angular velocity. Similary, $\ddot{\theta}_2$ represents angular acceleration.

+ Newton's Law.

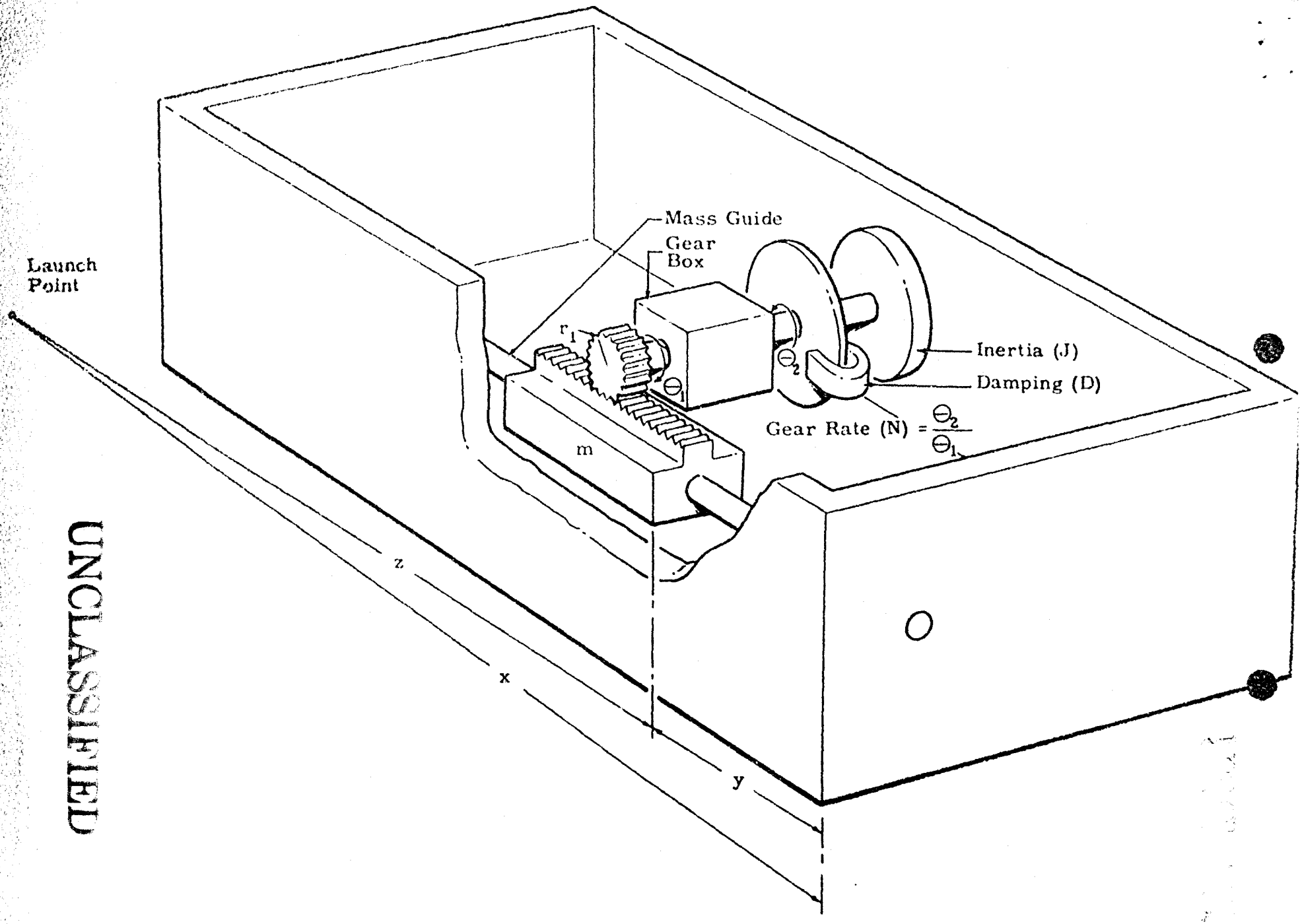

PHYSICAL SYSTEM SCHEMATIC DIAGRAM OF EDDY CURRENT VELOCIMETER
Figure 5

UNCLASSIFIED

where T_{D2} and $\dot{\theta}_2$ are respectively the damping torque and angular velocity associated with shaft 2. This torque reflected to shaft 1 is

$$T_{D1} = N\,T_{D2} = N\,D\dot{\theta}_2$$

where N is the gear ratio $\frac{\theta_2}{\theta_1}$.

Therefore

$$\theta_2 = N\theta_1$$

$$\dot{\theta}_2 = N\dot{\theta}_1$$

so that

$$T_{D1} = N^2 D\,\dot{\theta}_1.$$

This torque, T_{D1}, acts on the mass with a damping force, F_D, of

$$F_D = \frac{T_{D1}}{r_1} = \frac{N}{r_1} D\,\dot{\theta}_1.$$

Furthermore,

$$\theta_1 = \frac{y}{r_1},$$

$$\dot{\theta}_1 = \frac{\dot{y}}{r_1}$$

so that

$$F_D = \frac{N^2}{r_1^2} D\,\dot{y}$$

which gives the damping force on the mass as a function of the velocity of the mass with respect to the case.

The torque, T_{J2}, on shaft 2 due to the inertia, J, of the cup is

$$T_{J2} = J\,\ddot{\theta}_2\,.$$

Following steps similar to the preceding development, the force, F_J, acting on the mass due to this inertia is

$$F_J = \frac{N^2}{r_1^2} J \ddot{y}.$$

It is now possible to equate all the forces acting on the mass

$$m\ddot{z} = F_F + F_D + F_J$$

where $\ddot{z}$ is the acceleration of the mass with respect to inertial space. Noting the relationship $z = x - y$, where z is the displacement of the mass with respect to inertial space, x is the displacement of the case with respect to inertial space, and y is the displacement of the mass with respect to the case, and substituting the expressions obtained in the preceding development the equation becomes

$$m\ddot{x} = \left(M + \frac{N^2}{r_1^2} J\right) \ddot{y} + \frac{N^2}{r_1^2} D \dot{y} + F_F$$

for the condition $m\ddot{x} > F_F$.

To solve this equation for the mass displacement, y, it is assumed that the vehicle acceleration is constant, or $\ddot{x} = a$. The Laplace transform of the equation is

$$\frac{ma - F_F}{s} = \left(m + \frac{N^2}{r_1^2} J\right)\left[s^2 Y - sy(0+) - \dot{y}(0+)\right] + \frac{N^2}{r_1^2} D\left[sY - y(0+)\right].$$

For the physical conditions, $y(0+) = \dot{y}(0+) = 0$, this equation becomes

$$Y = \frac{ma - F_F}{m + \frac{N^2}{r_1^2} J} \frac{1}{s^2\left[s - \frac{D}{\frac{r_1^2}{N^2} m + J}\right]}$$

and has the inverse transform

$$y = \frac{m}{\frac{N^2}{r_1^2} D} v_m - \frac{F_F}{\frac{N^2}{r_1^2} D} t - \frac{\left(ma - F_F\right)\left(m + \frac{N^2}{r_1^2} J\right)}{\left(\frac{N^2}{r_1^2} D\right)^2}\left[1 - e^{-\frac{D}{J + \frac{r_1^2}{N^2} m} t}\right]$$

UNCLASSIFIED

where, of course, t represents time and v_m is the vehicle velocity, $v_m = at$. The above equation described completely the displacement of the mass with respect to the case, and thus the vehicle, as a function of vehicle acceleration and time for the condition of a constant vehicle acceleration, a, such that $ma > F_F$.

B. Determination of the Eddy Current Damping Constant

The damping constant, D, was defined above as the ratio of damping torque to angular velocity of the eddy current drag cup. How this damping occurs and what parameter governs its magnitude will now be shown.

Refer to the schematic diagram of the eddy current drag cup assembly in Fig. 6. A rotation of the cup about the magnet causes a voltage E to be induced across the conductor length ℓ of

$$E = B\ell v$$

where B is the flux density, and v is the velocity of the cup with respect to the magnetic flux. The resulting eddy current which flows is governed by the magnitude of the induced voltage and the resistance of the eddy current path. The resistance of that portion of the conductor in the magnetic field is directly obtainable from the physical configuration and the known resistivity of the conducting material. The resistance of the return path, external to the gap however, is not so easily obtainable and would be handled most precisely by graphical field mapping. For this development, the resistance of the entire current path will be denoted by the resistance of the conducting material in the gap multiplied by a constant, k. The resistance R of the eddy current circuit is then

$$R = k\rho \frac{\ell}{wc}$$

where w is the gap width and c is the cup thickness. The resulting current (I) that flows is

$$I = \frac{E}{R} = \frac{B\ell v}{k\rho \frac{\ell}{wc}} = \frac{B\,vwc}{k\rho} \quad .$$

Because of the existence of this current, a force, F_E, is exerted on the conductor by the magnetic field as shown. The magnitude of this force is:

UNCLASSIFIED

UNCLASSIFIED

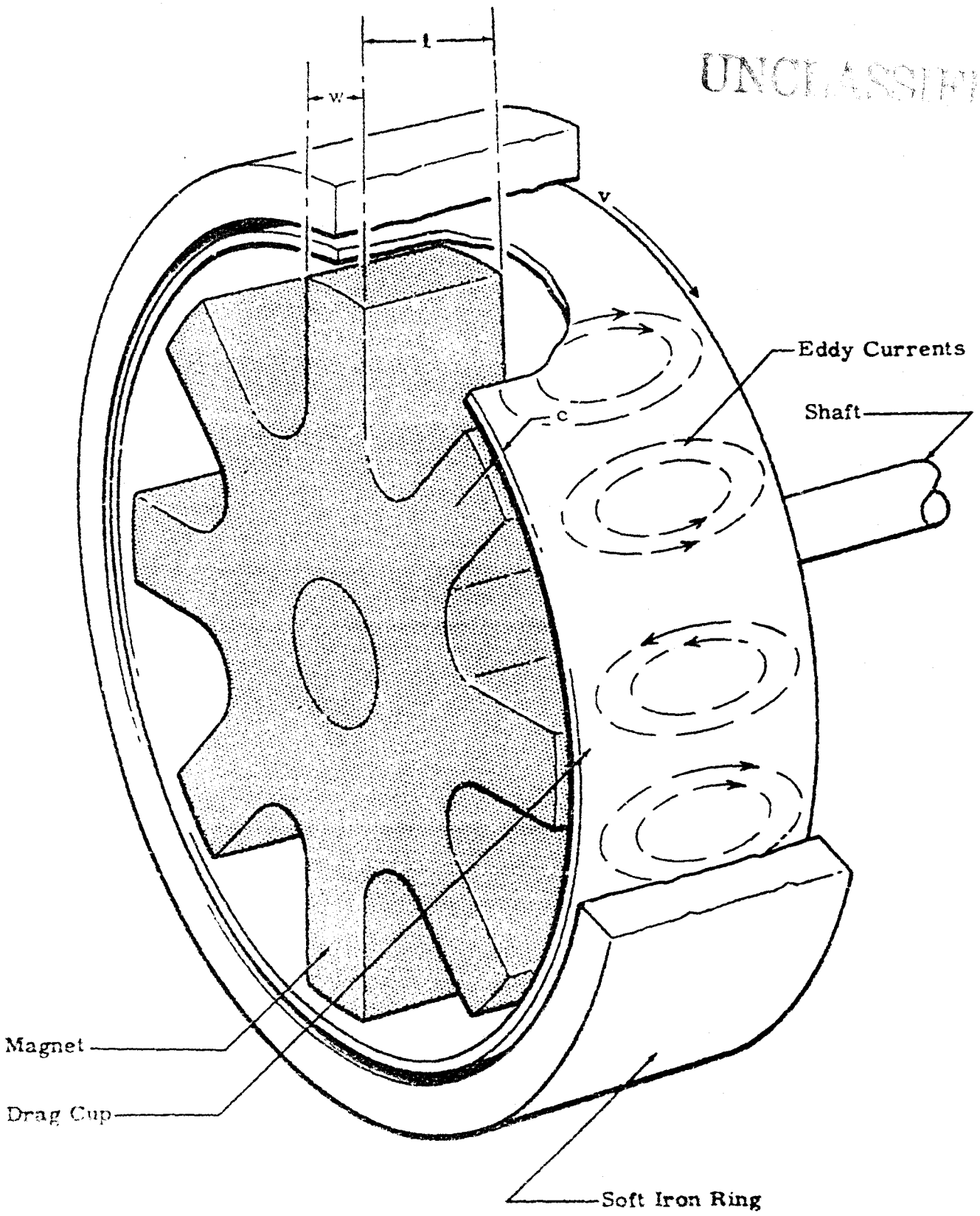

EDDY CURRENT DRAG CUP ASSEMBLY

Figure 6

UNCLASSIFIED

UNCLASSIFIED

$$F_E = BI\ell = \frac{B^2 \ell v w c}{k \rho} .$$

The conductor velocity, v, is equal to the angular velocity, $\dot{\theta}_2$, of the cup multiplied by its radius, r_4, and the damping force at each pole can be expressed as

$$F_E = \frac{B^2 \ell r_4 \dot{\theta}_2 w c}{k \rho} .$$

For an assembly with n number of magnet poles, the torque, T, on the cup shaft is obtained by multiplying the force, F_E, by the cup radius, r_4, and the number of poles, n.

$$T = n F_E r_4 = \frac{n B^2 \ell r_4^2 \dot{\theta}_2 w c}{k \rho} .$$

Denoting the total magnetic gap area, $A = n\ell w$, an expression for the damping constant is

$$D = \frac{T}{\dot{\theta}_2} = \frac{B^2 A r_4^2 c}{k \rho} .$$

UNCLASSIFIED