UNCLASSIFIED 613 SLMS-141

[redacted]

SANDIA LAB~~ORATORY~~

~~Branch of~~

LOS ALAMOS SCIENTIFIC LAB~~ORATORY~~

~~UNIVERSITY OF CALIFORNIA~~

SANDIA SYSTEMATIC DECLASSIFICATION REVIEW
1st Review Date: 10-29-81
Authority: ☐ADC ☒ADD CCRP-RR
Name:
2nd Review Date: 3-10-97
Authority: ADD W. Layne
Name:
Classification Changed to: U
Conditions Withdrawn
Conditions UCAIP
Comments: unclassified

EFFECT OF AERODYNAMIC TIME LAGS ON THE DYNAMIC STABILITY OF AN IDEALIZED CONFIGURATION

Dana Young, SLA-4
Millard V. Barton, SLA-4

September 9, 1949

Report No. SLMS-141

~~This document is the property of Sandia Laboratory and is only loaned to the recipient. It must be returned to the Sandia Laboratory Document Room upon request or when no longer needed by the recipient.~~

SANDIA SYSTEMATIC DECLASSIFICATION REVIEW DOWNGRADING OR DECLASSIFICATION STAMP	
CLASSIFICATION CHANGED TO U	AUTHORITY W. C. Layne
Emelda Selph 3/11/97 PERSON CHANGING MARKING & DATE	RECORD ID: 97SN857
Carmela M Gallegos 3/11/97 PERSON VERIFYING MARKING & DATE	DATED: 3-10-97

[redacted]

[redacted]

21P

[redacted]

UNCLASSIFIED

DISTRIBUTION:

1/30A	G. E. Hansche
2/30A	E. F. Cox
3/30A	R. P. Peterser
4/30A	R. A. Bice
5/30A	C. E. Runyan
6/30A	W. C. Scrivner
7/30A	R. W. Henderson
8/30A	John K. Northrop
9/30A	William B. Oswald
10/30A	George S. Schairer
11/30A	L. E. Root
12/30A	Dr. L. T. E. Thompson
13/30A	R. H. Kent Attn: C. L. Poor, A. C. Charters
14/30A	E. J. Horkey
15/30A	Col. Jack Gibbs
16/30A	Ira H. Abbott
17/30A	M. V. Barton
18/30A	Dana Young
19-20/30A	Keirn Zebb, Attn: Dr. Clark Millikan
21-30/30A	Sandia Laboratory Document Room

CONTENTS

		Page
(I).	INTRODUCTION	7
(II).	STABILITY OF AN AIRFOIL OSCILLATING ABOUT A FIXED POINT	9
	(A). Application to Complete Unit	10
	(B). Discussion	12
	(C). Recommendations for Dynamic Stability Test	13
(III).	IDEALIZED CONFIGURATION WITH TWO DEGREES OF FREEDOM	15
	(A). Introduction	15
	(B). Stability and Motion	16
(IV).	COMPARISON OF THE TWO SYSTEMS	19
(V).	LIST OF REFERENCES	21

LIST OF ILLUSTRATIONS

Fig. 1. -- Idealized Systems	5
Fig. 2. -- Stability Limits	6
Fig. 3. -- Fin Planforms	14
Fig. 4. -- Position of Center of Gravity for Neutral Dynamic Stability	20

INVESTIGATION OF EFFECT OF AERODYNAMIC TIME LAGS ON THE DYNAMIC STABILITY OF AN IDEALIZED CONFIGURATION

Summary. -- A theoretical analysis is made of the effect of aerodynamic time lags on the dynamic stability of an oscillating airfoil. Two special cases are examined (see Fig. 1). For the first case the airfoil is assumed to be rotating harmonically about a fixed point. The second case considers two degrees of freedom consisting of rotation about a point coupled with the transverse oscillation of that point. The magnitudes and phase lags of the aerodynamic forces in the low subsonic and supersonic regions are taken from known solutions. Since there is no adequate theory for the corresponding information in the transonic region, the aerodynamic parameters in this range were approximated by fairing-in curves between the known subsonic and supersonic values.

For the case of rotation about a fixed point it is found that the motion is unstable for a definite range of values of the parameter $\mu = l/c$ where l is the distance from the leading edge of the airfoil to the point of rotation and c is the chord of the airfoil. The range of values of μ for instability varies with Mach number and with the "reduced frequency," as shown in Fig. 2.

For the two-degree-of-freedom case essentially the same qualitative results are obtained. However, the calculations for one particular numerical example indicate that the unstable range is smaller than for the corresponding single-degree-of-freedom case. This implies that if the motion is stable for rotation about a given fixed point, it will also be stable if that point has a transverse oscillation provided the transverse motion has the same amplitude and phase relative to rotation that was found in the example.

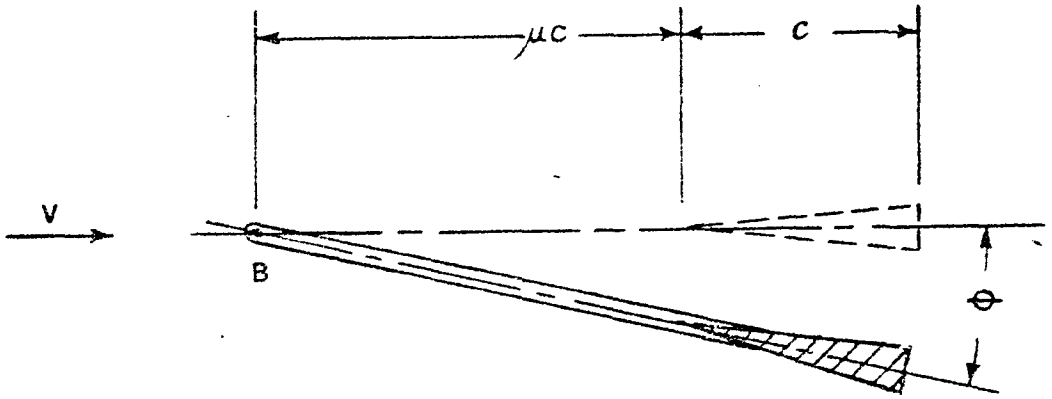

FIG. 1a

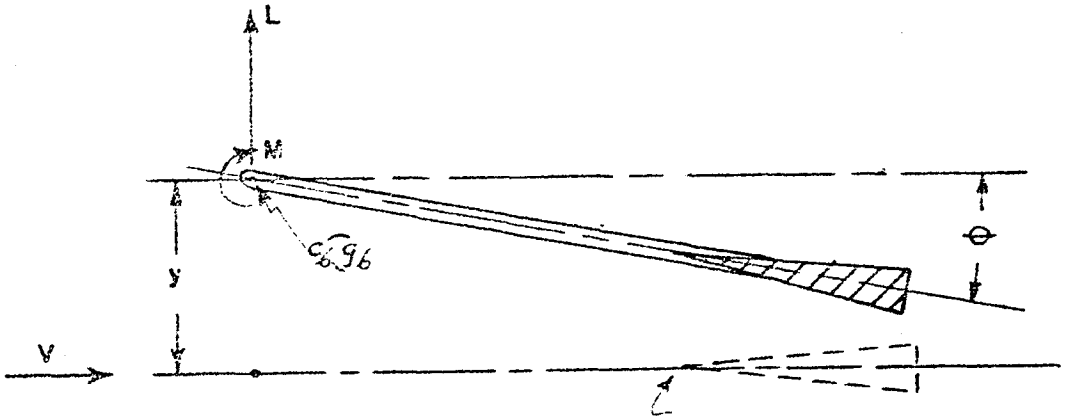

REFERENCE POSITION

FIG. 1b

IDEALIZED SYSTEMS

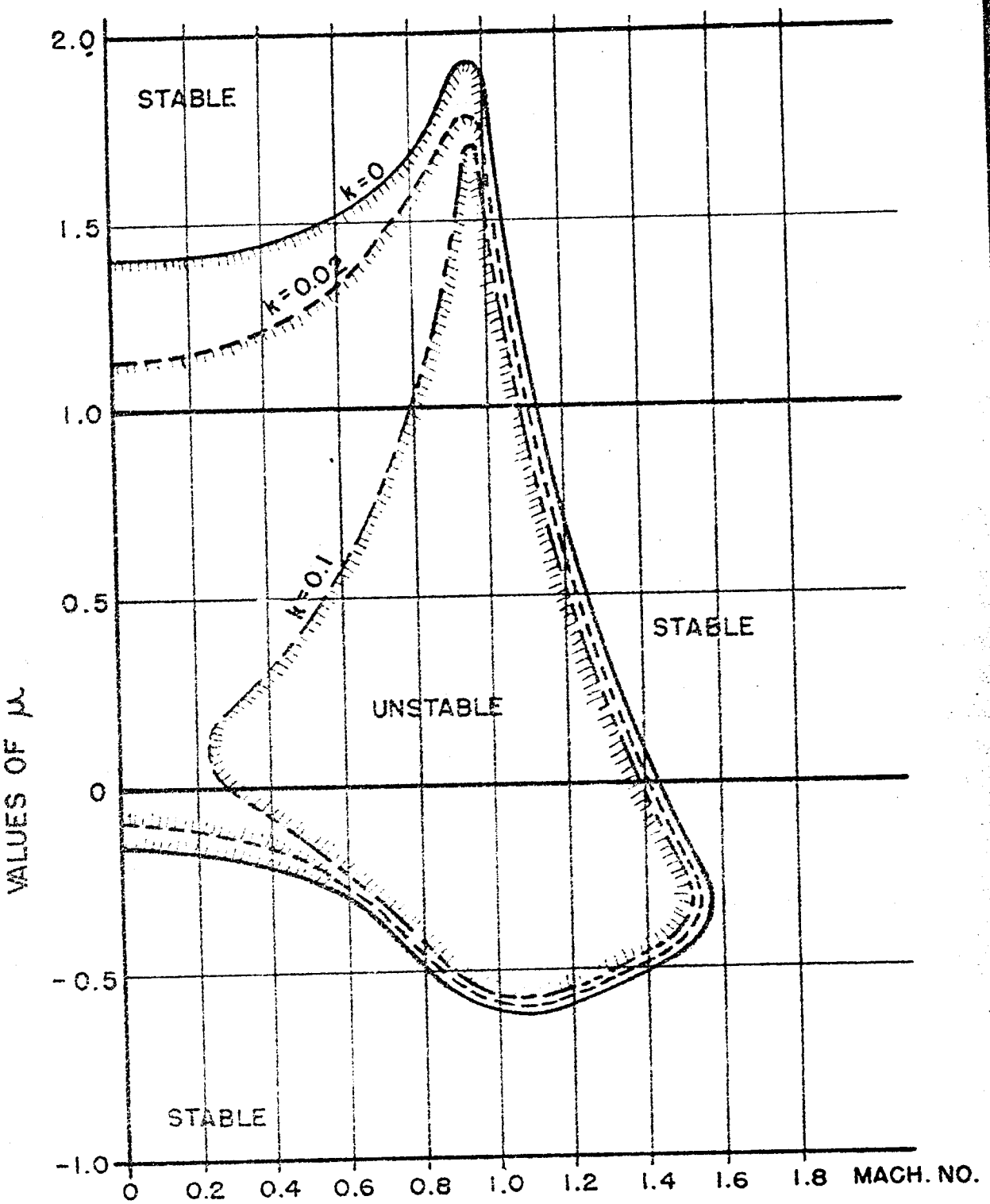

SHADED SIDE OF EACH CURVE IS IN UNSTABLE REGION

FIG. 2 STABILITY LIMITS

The analysis given herein may possibly be considered as approximating the behavior of a falling body with tail fins if it is assumed that the aerodynamic effects of the body do not significantly change the conditions upon which the analysis is based. The fins then act as oscillating airfoils with the point of rotation at the center of gravity of the unit.

The application of this analysis to the Mk IV bomb is discussed on this basis. It is found that the principal means of increasing the dynamic stability is to increase the parameter μ. This change in μ can be obtained either by moving the center of gravity forward or by reducing the airfoil chord, provided that static stability is maintained. Due to the many assumptions made both in the analysis and in its application to a specific unit, it is evident that the quantitative results must be unreliable. However, it is possible that the theory may be useful in indicating general trends. A wind-tunnel program is recommended to test the theory.

(I). INTRODUCTION

There are many possible causes for the instability of a falling body. For example, static instability may occur because of unfavorable variations of the aerodynamic forces and moments with angle of attack or Mach number, and dynamic instability may result from various causes such as buffeting or time lags in the buildup of the aerodynamic forces. In addition, other factors such as nonlinear variations in the aerodynamic forces, or coupling between roll, yaw, and pitch may also contribute to instability. In any one case the instability may be due to a combination of several of these causes.

As a step in attempting to understand the different possible mechanisms which can lead to instability, it was thought desirable to investigate the effects of aerodynamic time lags on the dynamic stability of an oscillating airfoil.

Time lags arise from nonstationary flow conditions which may be of two radically different types. The first type is associated with a smooth flow pattern corresponding

to potential flow theory in the subsonic region and to linearized flow theory in the supersonic region. The second type, which is more difficult to treat analytically, involves separated flows, periodic breakaway and reattachment of flow, shocks, and various hysteresis effects between the flow pattern and motion.

Intuitively, it seems natural to expect more trouble, at least in the transonic region, from the second type of flow conditions. However, there is no adequate theory for the time lags involved in flows of the second type, and it was therefore necessary to base the analysis upon the available theories for flows of the first type. Consequently, this analysis is strictly applicable only to smooth airflows of the first type. In addition, the analysis is restricted to a consideration of an idealized configuration consisting of an oscillating airfoil alone. Two special cases are discussed. The first case, see Fig 1a, is an airfoil which is constrained to rotate about a fixed point. The second case, see Fig. 1b, considers two degrees of freedom consisting of rotation about a point coupled with a transverse displacement of that point.

The magnitude and phase lag of the aerodynamic forces acting on an harmonically oscillating airfoil are known for subsonic potential flow[1] and for supersonic linearized flow.[2] There is no known solution for the corresponding information in the transonic region. In order to obtain the aerodynamic parameters for the transonic region, the procedure was adopted of fairing-in curves between the known subsonic and supersonic values. Although a certain amount of physical intuition was used in plotting the faired curves, there is no rational basis for this procedure, and it must be regarded as an unproved practical expedient.

Because of the many assumptions made in the analysis, it is evident that the particular numerical results obtained are quantitatively unreliable. However, it is believed that qualitatively the results may indicate the general trend of factors affecting instability and may serve as a guide in planning and interpreting tests with a wind-tunnel model.

The solution for the case of an airfoil rotating about a fixed point is discussed in the section immediately following. The analysis for the two-degree-of-freedom case is presented later on in the report.

(II). STABILITY OF AN AIRFOIL OSCILLATING ABOUT A FIXED POINT

Consider an airfoil which is oscillating harmonically in rotation about a fixed point B as shown in Fig. 1a. Let

c = chord of the airfoil

μc = distance from point of rotation to leading edge of airfoil

ω = circular frequency of oscillation

$i = \sqrt{-1}$

$\theta = \theta_o e^{i\omega t}$ = angular displacement of the airfoil

V = velocity of air stream

ρ = air density

S = area of airfoil

$a = dC_L/d\alpha$ = slope of lift coefficient of airfoil

$k = \frac{\omega c}{V}$ = reduced frequency

The moment of the aerodynamic forces about the fixed point B can be expressed in the following form:

$$M = a(1/2)\rho V^2 Sc\ [\overline{M}_e + i M_e^*]\ \theta$$

where

$$\overline{M}_e = -\overline{q}_1 + kq_2^* - \mu(\overline{r}_2 - 2kr_2^* - kq_1^*) + kr_1^*\ \mu^2$$

$$M_e^* = -q_1^* - k\overline{q}_2 - \mu(r_1^* + 2k\overline{r}_2 + k\overline{q}_1) - k\overline{r}_1\ \mu^2$$

In the equations above the eight parameters $\bar{r}_1$, r_1^*, $\bar{r}_2$, r_2^*, $\bar{q}_1$, q_1^*, $\bar{q}_2$, and q_2^* can be calculated for subsonic and supersonic velocities from equations given in the above-mentioned references by Theodorsen and Borbely. Each parameter is a function of both the reduced frequency and Mach number. Values of these parameters in the transonic range were roughly estimated by fairing-in curves between their subsonic and supersonic values and making due allowance for an abrupt peak near a Mach number of unity.

The stability of the oscillating system can be determined by calculating the energy input per cycle. This procedure leads to the simple relation that the motion is stable if M_e^* is less than zero and unstable if M_e^* is greater than zero.[3] Examination of the expression for M_e^* shows that for a given set of aerodynamic parameters (that is, for a given reduced frequency and given Mach number) there will be a range of values of μ for which the system is unstable.*

The calculated values of μ at the boundary between stability and instability are shown in Fig. 2. These limiting values of μ are plotted as a function of Mach number for each of several values of the reduced frequency $k = \omega c/V$. For example, for $k = 0.02$ and Mach number $= 0.8$, the system is unstable for any μ between 1.57 and -0.46, that is, for points of rotation from 1.57 chord lengths ahead of the leading edge of the airfoil to 0.46 chord length behind. It is stable for points outside of this range.

(A). Application to Complete Unit

In order to apply this theory to a falling body with tail fins, it is necessary to make the additional assumption that the aerodynamic effect of the body is negligible. This is obviously not correct since there are aerodynamic forces acting on the body and since, due to the shock waves and other body interference effects, the flow over the fins will

---

*For Mach numbers greater than 1.58, the system is stable for all values of μ

not be the same as that assumed in the analysis above. However, until a more complete theory is available, it seems worthwhile to study the implications of this simplified analysis with the hope that the general trends may still be qualitatively applicable.

As an example, assume that for a unit similar to the Mk IV we have the following data: $\omega = 2\pi$ radians per second; $c = 3$ ft; and $V = 900$ fps. Then $k = 2\pi \times 3/900 = 0.02$. Consider the center of gravity as the point of rotation and assume that it is 1.6 chord lengths ahead of the leading edge of the fins. From Fig. 2 it is seen that when $k = 0.02$ and $\mu = 1.6$ the motion is unstable between Mach numbers 0.82 and 1.01.

Thus it is seen that the general trend of the stability curves is to indicate a range of Mach numbers within which the motion is unstable. It is to be emphasized that the specific numerical results obtained from Fig. 2 are very doubtful because of the numerous assumptions made in the theory and its application. It is only the general trend of the curves that has possible significance.

If this theory is valid, one possible remedy for instability is to make μ sufficiently large so that it will be outside the instability range for all Mach numbers. This can be accomplished either by moving the center of gravity forward or by reducing the chordwise dimension of the fin, provided that static stability is maintained.

The effect of changes in other parameters is represented by the corresponding change in the reduced frequency $k = \omega c/V$. For example, if the moment of inertia of the unit is decreased, the frequency would increase, and hence k would be increased. According to Fig. 2, if k is increased, the region of instability becomes narrower. Similarly, increasing either $dC_L/d\alpha$ or the density, ρ, would increase the frequency and hence also narrow the region of instability.

It should perhaps be noted that the frequency of the unit can be calculated with sufficient accuracy from static test data by the usual formula

$$\omega = \sqrt{\frac{dC_M}{d\alpha} \cdot \frac{\rho V^2 Sc}{I}}$$

That is, the time lags do not appreciably change the frequency within the range of parameters that is likely to occur.

(B). Discussion

It is not to be expected that the theory above for time lags is complete. In the transonic region the effect of shocks and separation has been neglected because of inadequate knowledge. There may be some appreciable variation with Reynolds number as well as Mach number in this range. When applied to the prototype unit, the aerodynamic effects of the body were neglected as well as the fact that in an actual drop the Mach number is changing rapidly with time.

Other mechanisms besides time lags can also cause instability. In any given case the instability may be due to a combination of different causes. Brief comments on some of these other possible causes of instability follow:

(1). Static Instability. -- If $dC_M/d\alpha$ is always positive, or $dC_T/d\alpha$ is always negative, the unit would be statically unstable and would diverge from its proper flight path without oscillating. There is no evidence of this type of instability in any of the units. Another type of static instability can occur if the curve of restoring moment vs angle of attack is positive over a limited range of angles and then becomes negative. In such a case, the unit could build up oscillations or it might trim at some nonzero angle of attack. The wind-tunnel tests show that the moment curves at certain Mach numbers for some configurations have this character. The worse cases are the lenticular fin, the thin-fin shroud, and the dorsal fin. The single-wedge fin at a Mach number of 0.93 also exhibits a slight reversal in the moment curve. The wind-tunnel tests also indicate that, when artificial roughness is added to the body, a reversal in the moment curve can sometimes be produced even when there is no indication of such a reversal for the smooth configuration. Such is the case of the extended large-plan wedge at Mach number = 0.93 with a transition wire. This points to the desirability of a smooth contour for the unit and its parts.

(2). Variation of Restoring Moment With Time. -- If, during flight, the restoring moment decreases continuously with respect to time, it is possible for oscillations to build up. For such a decrease in moment the requirement is that the quantity $\frac{dC_M}{d\alpha} \rho V^2$ decrease with time. In flight, ρ and V generally increase continuously with respect to time, while $dC_M/d\alpha$ may decrease with respect to time over rather short intervals because of its variation with Mach number as shown by wind-tunnel tests. The net effect is that there are only short intervals in the flight during which the restoring moment decreases with time. These intervals are not well correlated with the occurrence of oscillations.

(3). Buffeting. -- Semiperiodic impulses on the fins can be produced by the turbulent air within a separated boundary layer behind a strong shock wave. The rather meager data available from airplane tests indicate that the frequency of such impulses is probably so much higher than the frequency of the unit that this cause is not significant.

(4). Nonlinearity and Coupling. -- Nonlinear variations in the aerodynamic forces and coupling between roll, yaw, and pitch are additional factors which may contribute to or cause instability. There are not sufficient data at the present time to assess the importance of these factors.

(C). Recommendations for Dynamic Stability Test

As a partial check of the validity of the time-lag theory, it is recommended that a one-degree-of-freedom oscillatory dynamic stability test in a wind tunnel be made with each of the three fin planforms A, B, and C shown in Fig. 3. The values of μ for each of these planforms are shown in this figure. From Fig. 2 it is estimated that,

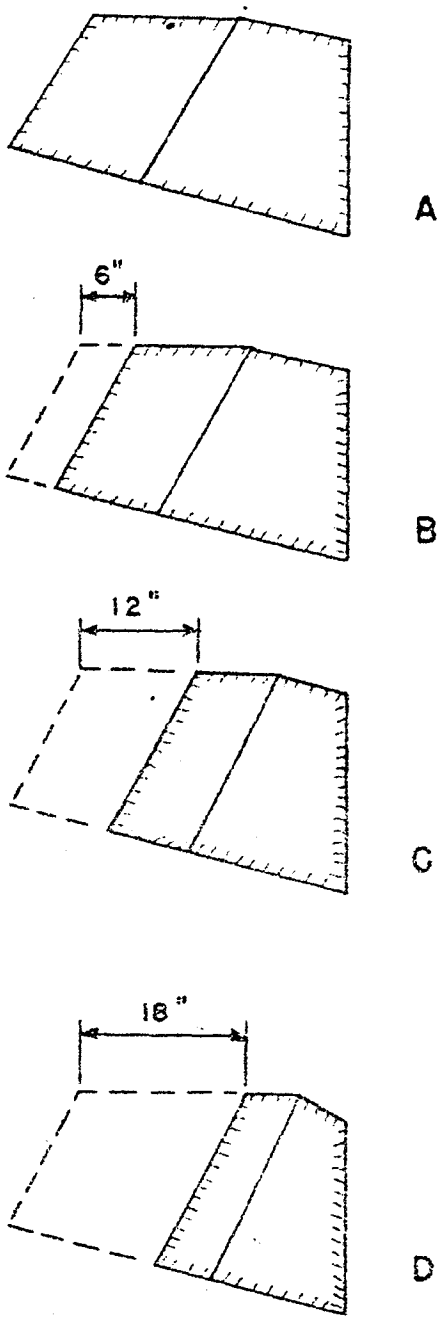

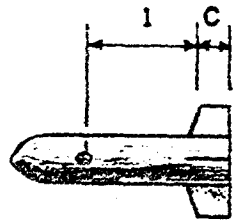

FIN	$\mu = l/c$
A	1.63
B	2.17
C	3.00
D	4.42

VALUES OF μ BASED ON c $\bar{g}$ POSITION 44" AFT OF NOSE.

NOTE: FIN D IS PROBABLY STATICALLY UNSTABLE.

SAME WEDGE ANGLES USED IN ALL PLATFORMS.

FIG. 3 FIN PLATFORMS

with these values of μ, planform A is probably dynamically unstable for high Mach numbers, planform B is about neutrally stable, whereas planform C should be dynamically stable.

It is important that the reduced frequency in the model test be the same as for the prototype. The similarity condition for equal k in prototype and model requires that

$$\frac{I_2}{I_1} = \frac{l_2^5}{l_1^5} \cdot \frac{\rho_2}{\rho_1}$$

where I is the moment of inertia, l is any characteristic length, and ρ is the air density; the subscript 1 refers to the prototype; the subscript 2 refers to the model.

(III). IDEALIZED CONFIGURATION WITH TWO DEGREES OF FREEDOM

(A). Introduction

In the first part of this report an idealized configuration of one degree of freedom, consisting of an airfoil oscillating about a fixed point, has been investigated. The question that may be asked is whether a coupling of two or more motions can produce more critical conditions than that of pitching only. As a first step in answering this question, the effect of time lags has been determined for an airfoil oscillating about a point which is oscillating transversely to the airflow direction. This may represent, in an approximate manner, the motion of the unit pitching about its center of gravity with the center of gravity moving transversely to the mean flight path for which only the aerodynamic forces on the fins are considered. The aerodynamic forces on the body and the interaction between the body and fins are completely neglected.

In the study of the two-degree-of-freedom system, it is necessary to introduce such factors as the mass and moment of inertia of the unit. However, because of the many approximations made, the results of the analysis should be used only to indicate qualitative trends, and in no case should they be interpreted as quantitative values that apply directly to the unit.

(B). Stability and Motion

Referring to Fig. 1b, the equations of motions are

$$\begin{aligned} m\ddot{y} &= L \\ I\ddot{\theta} &= M \end{aligned} \tag{1}$$

If we assume an oscillation with angular frequency ω such that

$$\begin{aligned} \theta &= \theta_o e^{i\omega t} \\ y &= y_o e^{i(\omega t + \phi)} \end{aligned} \tag{2}$$

on substituting the expressions for the aerodynamic lift and moment of the airfoil, the equations of motion become

$$\begin{aligned} &\left[\frac{mk^2}{Ac} + (\overline{P}_y + iP_y^*)\right]\frac{y}{c} + (\overline{P}_\theta + iP_\theta^*)\,\theta = 0 \\ &(\overline{M}_y + iM_y^*)\,\frac{y}{c} + \left[\frac{Ik^2}{Ac^3} + (\overline{M}_\theta + iM_\theta^*)\right]\theta = 0 \end{aligned} \tag{3}$$

for which the characteristic equation is

$$\begin{aligned} &k^4 + A\left[\frac{c^3}{I}\overline{M}_\theta + \frac{c}{m}\overline{P}_y + i\left(\frac{c^3}{I}M_\theta^* + \frac{c}{m}P_y^*\right)\right]k^2 \\ &+ \frac{A^2c^4}{Im}\left[\overline{P}_y\overline{M}_\theta - P_y^*M_\theta^* - \overline{P}_\theta\overline{M}_y + P_\theta^*M_y^* + i(P_y^*\overline{M}_\theta - \overline{P}_\theta M_y^* - P_\theta^*\overline{M}_y + \right. \\ &\left.\overline{P}_y M_\theta^*)\right] = 0 \end{aligned} \tag{4}$$

where

θ = angle of pitch

θ_o = amplitude of pitch

y = transverse displacement of cg

y_o = amplitude of y

c = chord of airfoil

I = moment of inertia of system about cg

m = mass of system

A = $(1/2)\rho aS$

S = area of airfoil

ρ = air density

a = slope of lift curve of airfoil

k = $\frac{c\omega}{V}$ = reduced frequency

V = velocity of flow

ω = angular frequency of oscillation

μ = number of airfoil chord lengths of cg ahead of the leading edge of airfoil

$$i = \sqrt{-1}$$

$$\bar{P}_\theta = \bar{r}_1 - 2r_2^* k - r_1^* k\mu$$

$$P_\theta^* = r_1^* + 2\bar{r}_2 k + \bar{r}_1 k\mu \qquad (5)$$

$$\bar{P}_y = r_1^* k$$

$$P_y^* = -\bar{r}_1 k$$

$$\bar{M}_\theta = -\bar{q}_1 + kq_2^* - (\bar{r}_1 - kq_1^* - 2kr_2^*)\,\mu + r_1^* k\mu^2$$

$$M_\theta^* = -q_1^* - k\bar{q}_2 - (r_1^* + k\bar{q}_1 + 2kr_2)\,\mu - \bar{r}_1 k\mu^2 \qquad (5)$$

$$\bar{M}_y = -q_2^* k - (q_1^* k + 2\,r_2^* k)\,\mu - r_1^* k\mu^2$$

$$M_y^* = \bar{q}_2 k + (\bar{q}_1 k + 2\bar{r}_2 k)\,\mu + \bar{r}_1 k\mu^2$$

The values of the r's and q's have been obtained for Mach numbers near unity by fairing between known subsonic and supersonic values.

For a specific system with known values of mass, moment of inertia, Mach number, and position of the center of gravity, the characteristic equation, Eq 4, can be expressed in terms of the unknown reduced frequency k. The values of k that satisfy the characteristic equation correspond to the condition of oscillation of the system at constant amplitude, which corresponds to neutral dynamic stability. Having the value of k, the relative amplitude and phase between the pitching motion and the transverse motion of the center of gravity may be obtained from the equations of motion, Eq 3. Thus

$$\frac{y_o}{\theta_o c} = \sqrt{\frac{(Ik^2/Ac^3 + \bar{M}_\theta)^2 + (M_\theta^*)^2}{(\bar{M}_y)^2 + (M_y^*)^2}} \qquad (6)$$

$$\phi = \tan^{-1} \frac{M_\theta^* \bar{M}_y - M_y^*(Ik^2/Ac^3 + \bar{M}_\theta)}{M_\theta^* M_y^* + \bar{M}_y(Ik^2/Ac^3 + \bar{M}_\theta)} \qquad (7)$$

In the numerical evaluations which were made to establish qualitative effects, it was found expedient to allow both μ and k to vary so that the characteristic equation was satisfied while holding all other parameters such as mass and moment of inertia constant. Thus for a system with a given mass and moment of inertia, the position of the center of gravity, in terms of μ, and the frequency, in terms of k, are determined for neutral dynamic stability. Allowing the position of the center of gravity to vary while holding all other parameters constant is, of course, an expedient

for showing the variation of stability with the position of the center of gravity. Neutral dynamic stability for an actual system would only occur when the μ thus determined corresponded to the actual position of the center of gravity for the system.

(IV). COMPARISON OF THE TWO SYSTEMS

To compare the relative stabilities of a system with one degree of freedom with a system of two degrees of freedom, an evaluation was made for each, assuming the same physical characteristics and the same aerodynamic parameters for the systems. The physical characteristics are those for the Mk IV Mod 0 FM bomb.

The position of the center of gravity in terms of μ for neutral dynamic stability in each system is shown in Fig. 4. Each point on the curves represents, in terms of μ, the position of the center of gravity for neutral stability for the particular frequency of oscillation that the unit will experience under the given conditions of Mach number and position of the center of gravity. In general, the frequencies for the single-degree-of-freedom system are slightly higher (about 20 per cent) than the two-degree system for the same Mach number. This difference is due rather to the different positions of the centers of gravity for neutral stability with the corresponding change in static stability than to an inherent difference in the two systems.

It is evident that if the position of the center of gravity is far enough forward to prevent instability in a system that is only pitching, this position should also be sufficient to prevent instability due to the combination of pitching and transverse motion for the cases examined. This implies that if the instability can be corrected by varying the μ on a model which is allowed only pitching motion, this correction should be in the right direction to improve the stability of the system that has a combination of pitch and transverse motion, provided the motions fall within the frequency range investigated.

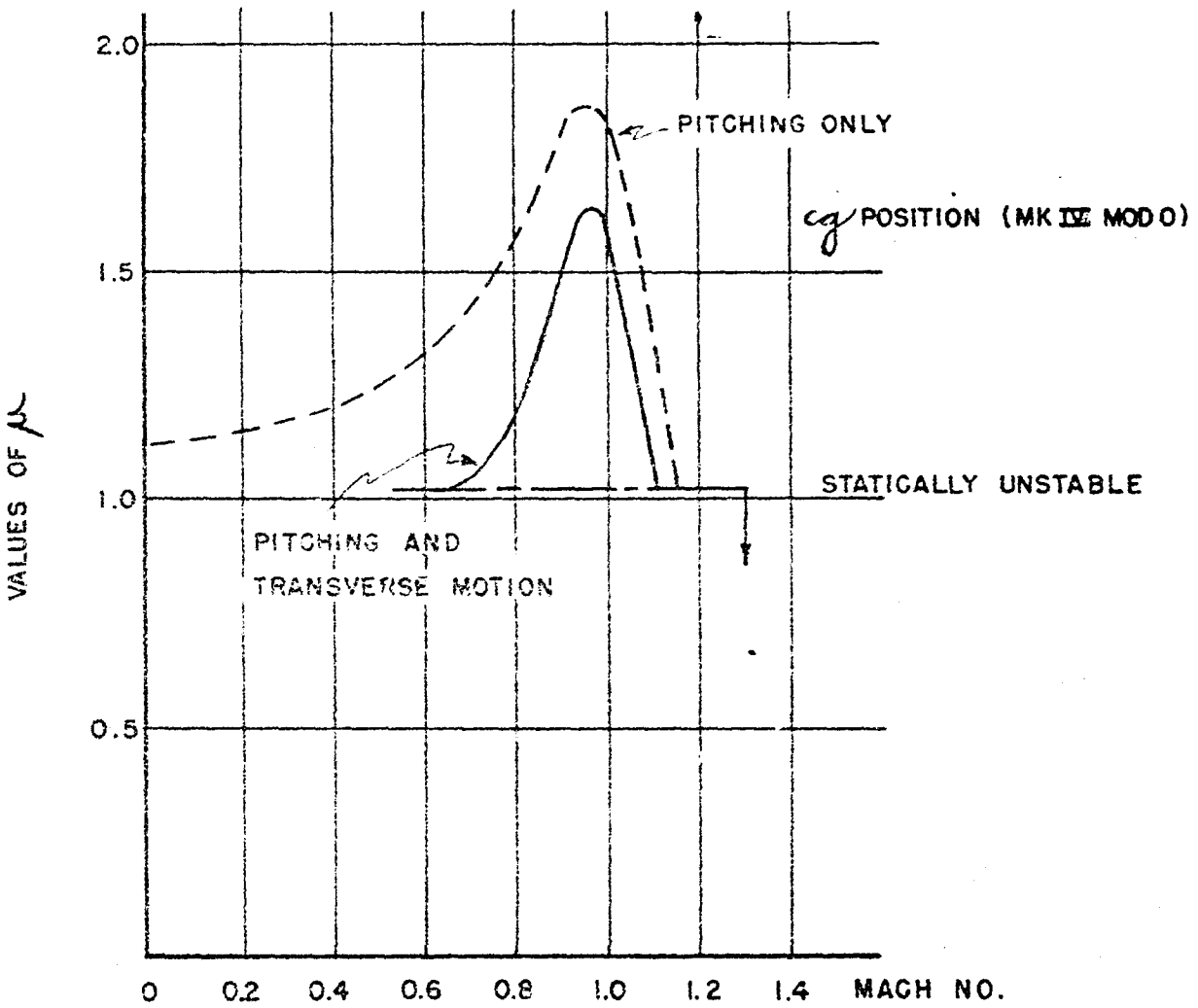

FIG. 4 POSITION OF CENTER OF GRAVITY FOR NEUTRAL DYNAMIC STABILITY

The amplitude ratios and phase angles were evaluated for the two-degree-of-freedom system. It was found that $y_o/\theta_o c$ was of the order of unity, so that for the unit the transverse motion of the center of gravity would be very small compared with the pitching motion. The phase angle between transverse motion and pitch is about 3 degrees.

(V). LIST OF REFERENCES

[1]NACA Report No. 496, General Theory of Aerodynamic Instability and the Mechanism of Flutter, by T. Theodorsen, 1935.

[2]Von Borbely, S., "Aerodynamic Forces on a Harmonically Oscillating Wing at Supersonic Velocity," Zeit Angew Math Mech, XX No. 4 (August 1937).

[3]Barton, M. V., "Stability of an Oscillating Airfoil in a Supersonic Airflow," Jour Aero Sci, XV No. 6 (June 1948).