1174

SC-2289(Tr)

COPY 80 A

UNCLASSIFIED

[redacted]

[redacted]

SANDIA SYSTEMATIC DECLASSIFICATION REVIEW
DOWNGRADING OR DECLASSIFICATION STAMP

CLASSIFICATION CHANGED TO: U	AUTHORITY: Bruce Green
Emelda Selph 3/6/97	RECORD ID: 97SN257
PERSON CHANGING MARKING: 3/11/97	
Carmela M Dallaya	DATED: 2-20-97
PERSON VERIFYING MARKING & DATE	

ENGINEERING REPORT ON THE PRIMER TESTER (T-30)

W. K English, 5431

April 16, 1952

SANDIA SYSTEMATIC DECLASSIFICATION REVIEW

1st Review Date: 1-13-97	Classification Changed: U
Authority: ☐ ADC ☒ ADD	Classification Changed to:
Name: W. Layne	Contains Unclassified Information
2nd Review Date: 2/20/97	Contains UCAI
Authority: ADD	Comments
Name: B. D. Green	

[redacted]

[redacted]

[redacted]

[redacted]

SANDIA CORPORATION

UNCLASSIFIED

[redacted]

CONTENTS

	Page
Summary	4
Design History	4
Theory, Controls, and Components	9
Appendix A	19
Appendix B	20

LIST OF ILLUSTRATIONS

	Page
Fig. 1. -- T-30, case, lid, and cables	5
Fig. 2. -- Front panel	6
Fig. 3. -- Top view chassis	7
Fig. 4. -- Bottom view chassis	8
Fig. 5. -- T-30 schematic	10
Fig. 6. -- Bridge circuit	11
Fig. 7. -- Calibration plug	12
Fig. 8. -- Ground check	14
Fig. 9. -- Magnetic amplifier connections	15
Fig. 10. -- Power supply selection	17
Fig. 11. -- Bridge power supply	18

UNCLASSIFIED

ENGINEERING REPORT ON THE PRIMER TESTER (T-30)

Summary. -- The primer tester (T-30) (Figs. 1-4) is used to perform electrical tests on the fuzes for the Mk 8 weapon. It determines whether the resistance of the fuze is within the specified range of 0.9 to 1.3 ohms and whether the proper wire in the fuze cable is grounded to the fuze shell.

Power required for the T-30 is either 115±10 volts 60-cycle at 0.2 amp or 26±4 volts d-c at 1.0 amp. One CT-101 cable (d-c power) and one CT-102 cable (a-c power) are supplied with the T-30.

The T-30 consists of a 9 x 17 inch panel on which are mounted all the controls, the indicator and connectors, and a chassis; all other components are mounted on the chassis. The panel mounts by Airloc fasteners in a type A, class I (small) case. Cable storage is provided by a compartment in the case cover. The T-30, including its cables and case, weighs 58 pounds.

Design History

Design was started on the T-30 in December 1950. A circuit such as that used in the detonator circuit ohmmeter for the Mk 6 weapon was investigated and a circuit somewhat like this was actually used for the 38M program in February 1950. Because of the time limitations on this program, three detonator circuit ohmmeters were modified and proved satisfactory for this application. This circuit, however, employs a highly sensitive millivoltmeter. Since there was more time allowed for the development of the T-30, it was decided that a more rugged instrument should be built, and design was started on amplifying circuits which could use a ruggedized and less sensitive meter. At first, vacuum tube amplifiers were tried, but these proved unstable, and components were not as rugged as desired. In March the Vickers Electric Division of St. Louis was contacted with the idea of finding a magnetic amplifier which could be used. One of their standard units was recommended. This unit was found to be satisfactory and the T-30 circuit was designed around it. It was hoped at first that the T-30 could be self-contained, using some form of hand-crank generator for a power source. Several generators were investigated,

UNCLASSIFIED

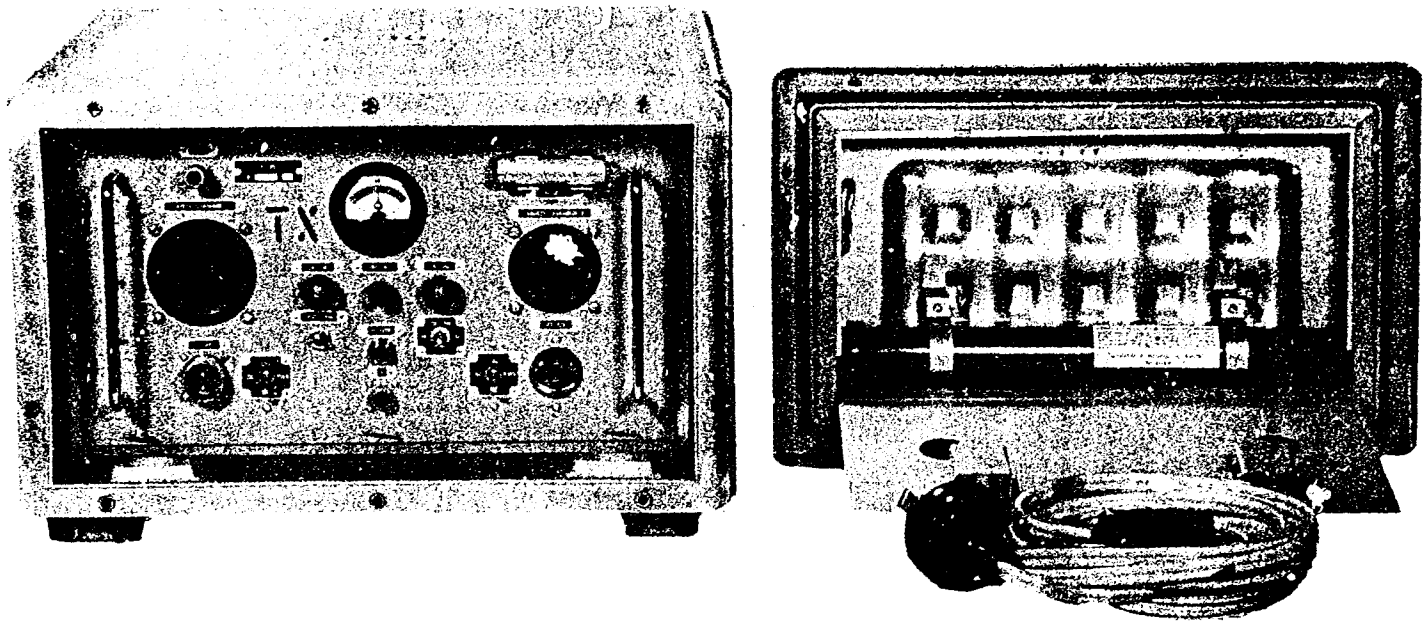

Fig. 1. -- T-30, case, lid, and cables

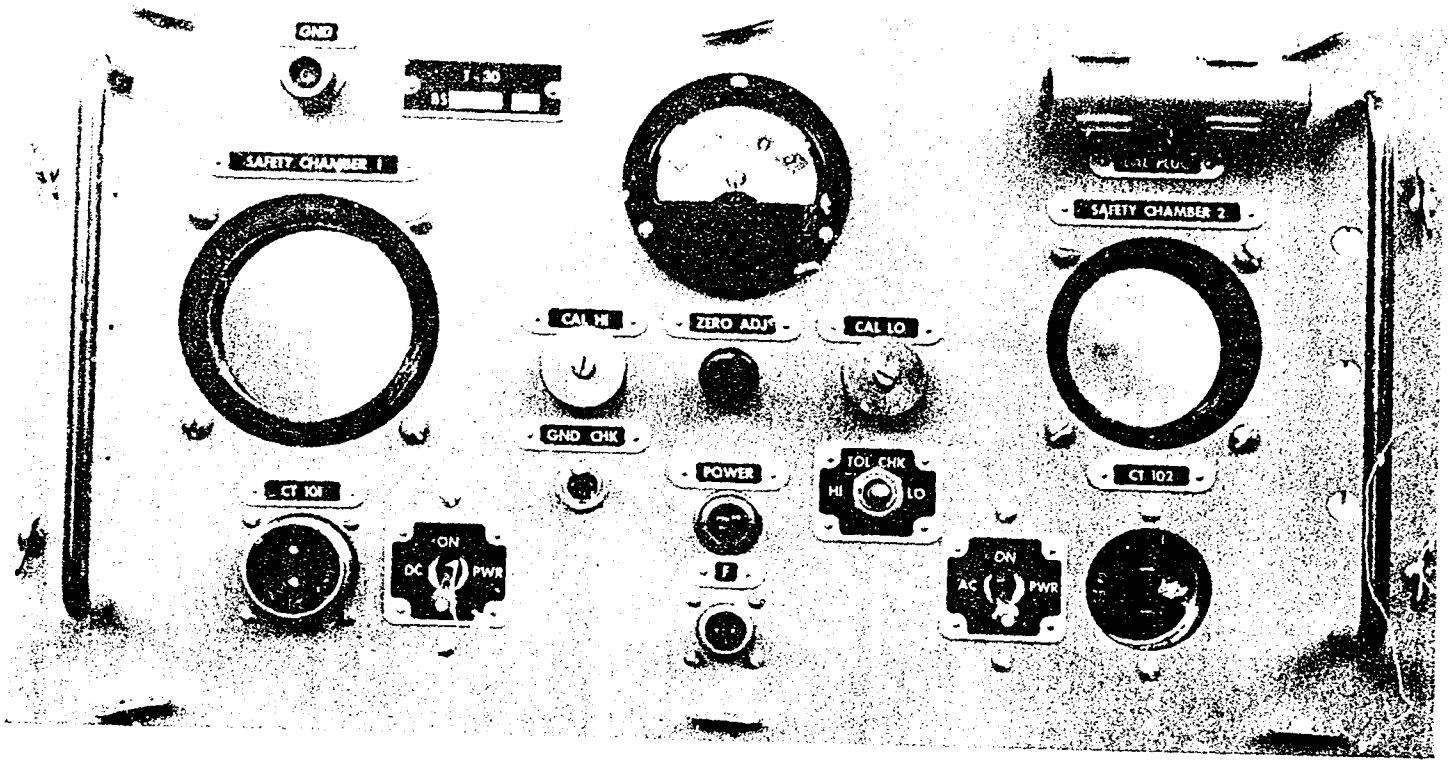

Fig. 2. -- Front panel

1173

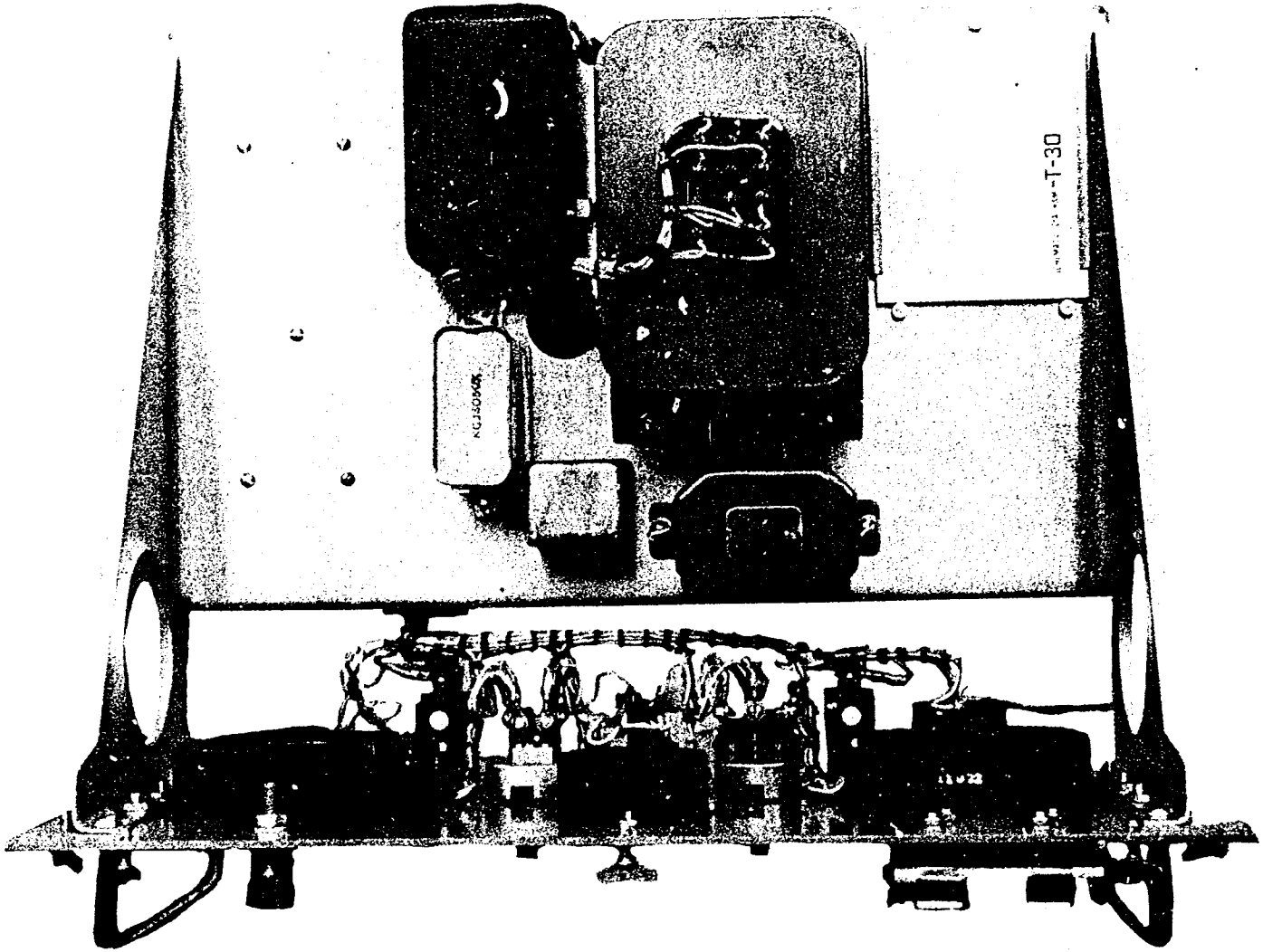

Fig. 3. -- Top view chassis

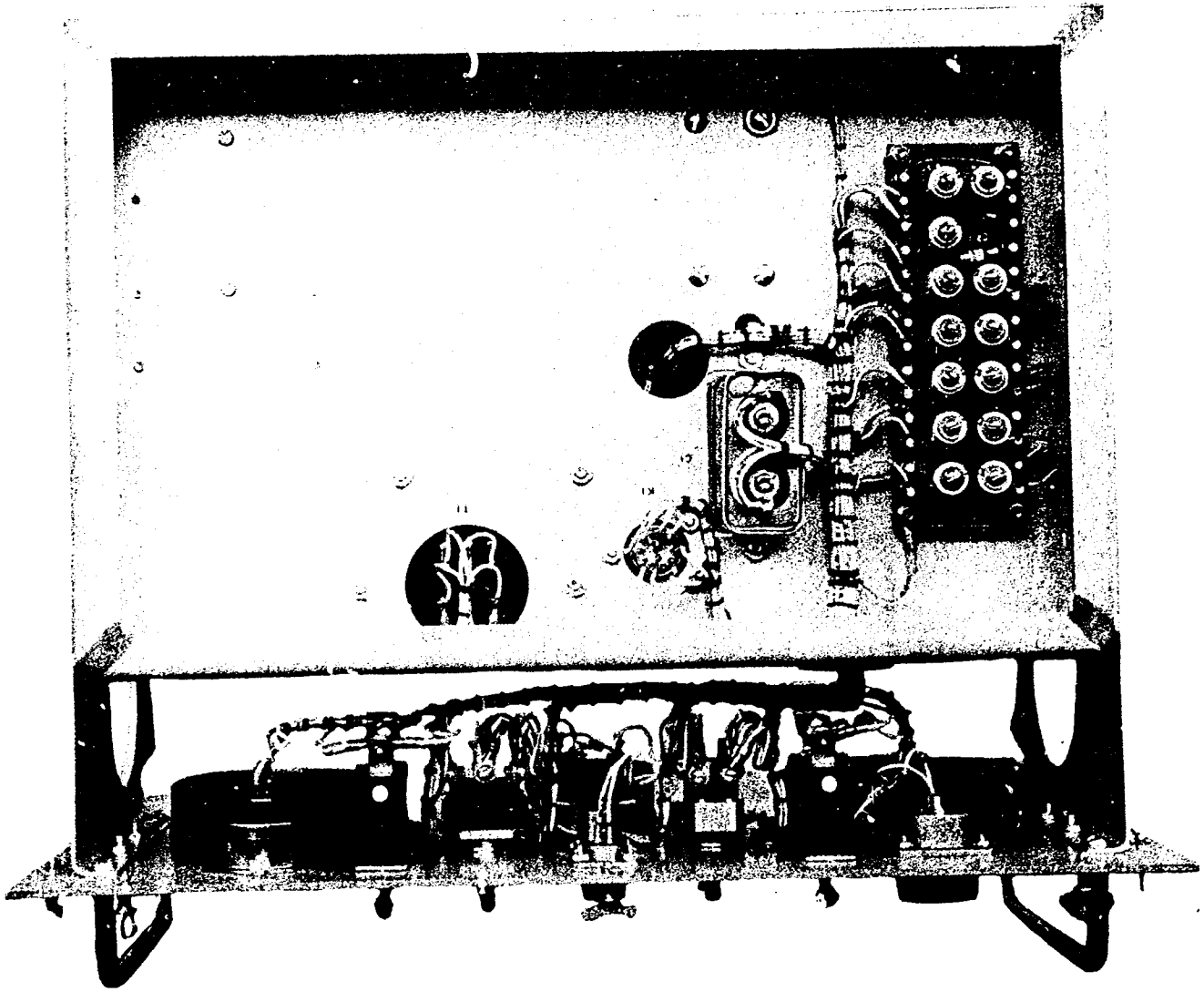

Fig. 4. -- Bottom view chassis

1181

and this system appeared to be feasible. However, because of the time limitation, the dual power system now used was adopted over the generator system.

Sketches and preliminary specifications for the T-30 were completed about the first of April 1951, and a fabrication order was written on April 5, 1951. Century Engineers of Burbank, California, were awarded the contract. On June 15, 1951, a complete design release was written. On October 2, 1951, the first hand-built sample was received from Century Engineers and was approved.

Theory, Controls, and Components

The T-30 does not indicate the actual resistance of the fuze under test but gives a GOOD-BAD indication, which shows whether or not the fuze resistance is within the range of 0.9 to 1.3 ohms.

When switch S-1 is held in the HI position a GOOD indication on M-1 means that the fuze resistance is less than 1.3 ohms. When S-1 is held in the LO position a GOOD indication on M-1 means that the fuze resistance is greater than 0.9 ohm.

Potentiometer R-15 is used to adjust the meter to zero center before performing the test. Potentiometers R-13 and R-14 in conjunction with the calibration plug are used to adjust the resistance range which contains two resistor standards of 0.9 and 1.3 ohms.

The ground check switch, S-2, is depressed to determine whether the proper wire in the fuze cable is connected to the fuze shell. Two safety chambers are provided in the front panel to hold the fuzes while under test. These chambers also provide electrical connection to the fuze shell for the ground check. The cable of the fuze under test connects to J-1.

J-2 connects through cable CT-101 to a d-c power source. J-3 connects through cable CT-102 to an a-c power source. CB-1 and CB-2 are the power switches.

Figure 5 is the complete schematic of the T-30. Figure 6 is the schematic of the bridge circuit. Actually the voltage output from the bridge is amplified by the magnetic amplifier before it goes to to the meter, but in this schematic the amplifier is left out for simplification. The operation of this circuit is as follows:

> The 1.3-ohm end of the calibration plug (Fig. 7) is inserted in J-1, and switch S-1 is thrown to the HI position, applying a voltage of polarity as indicated to the bridge. R-13 is then adjusted for balance or zero deflection on M-1.

UNCLASSIFIED

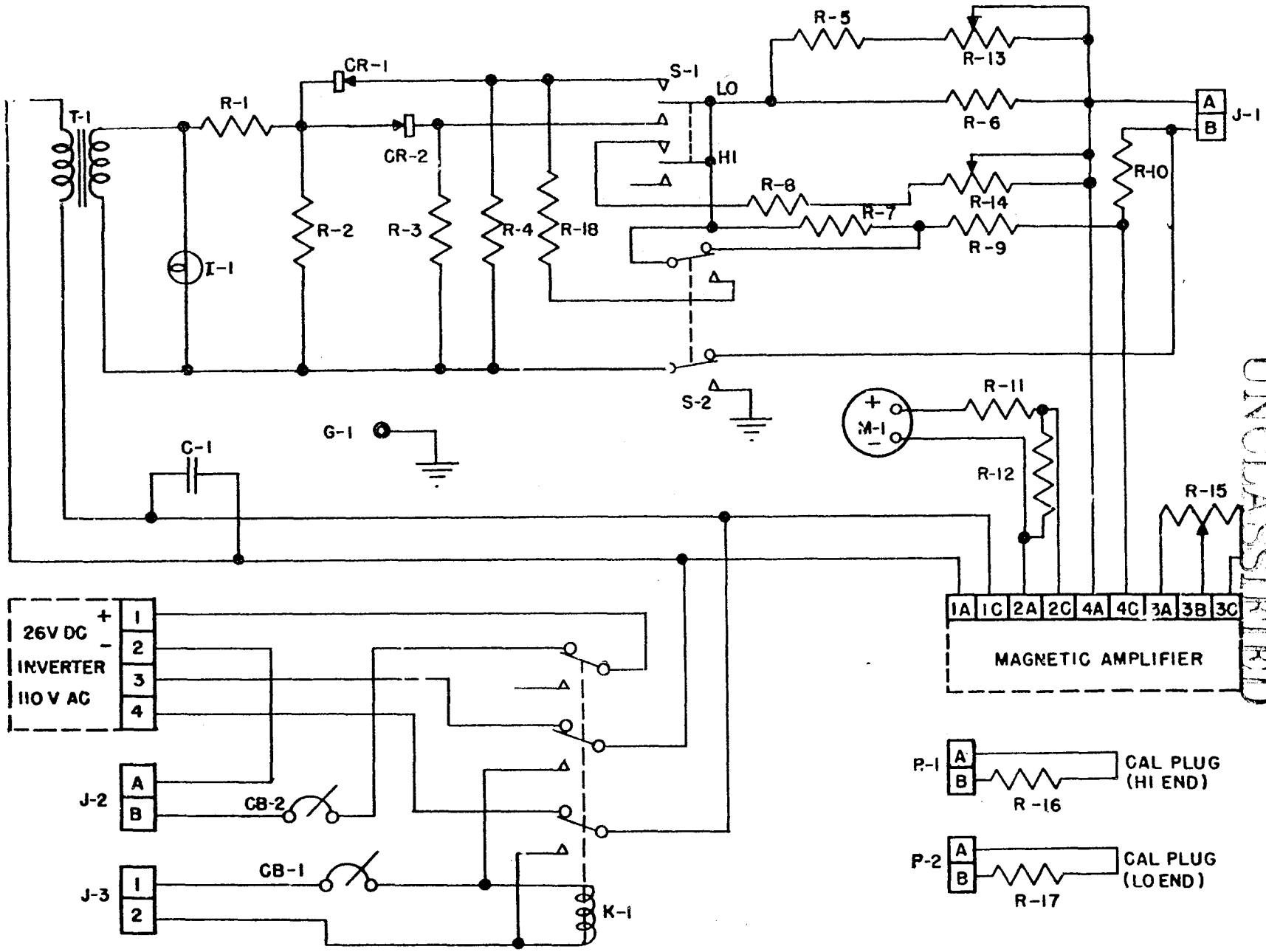

Fig. 5. -- T-30 schematic

UNCLASSIFIED

[redacted]
UNCLASSIFIED

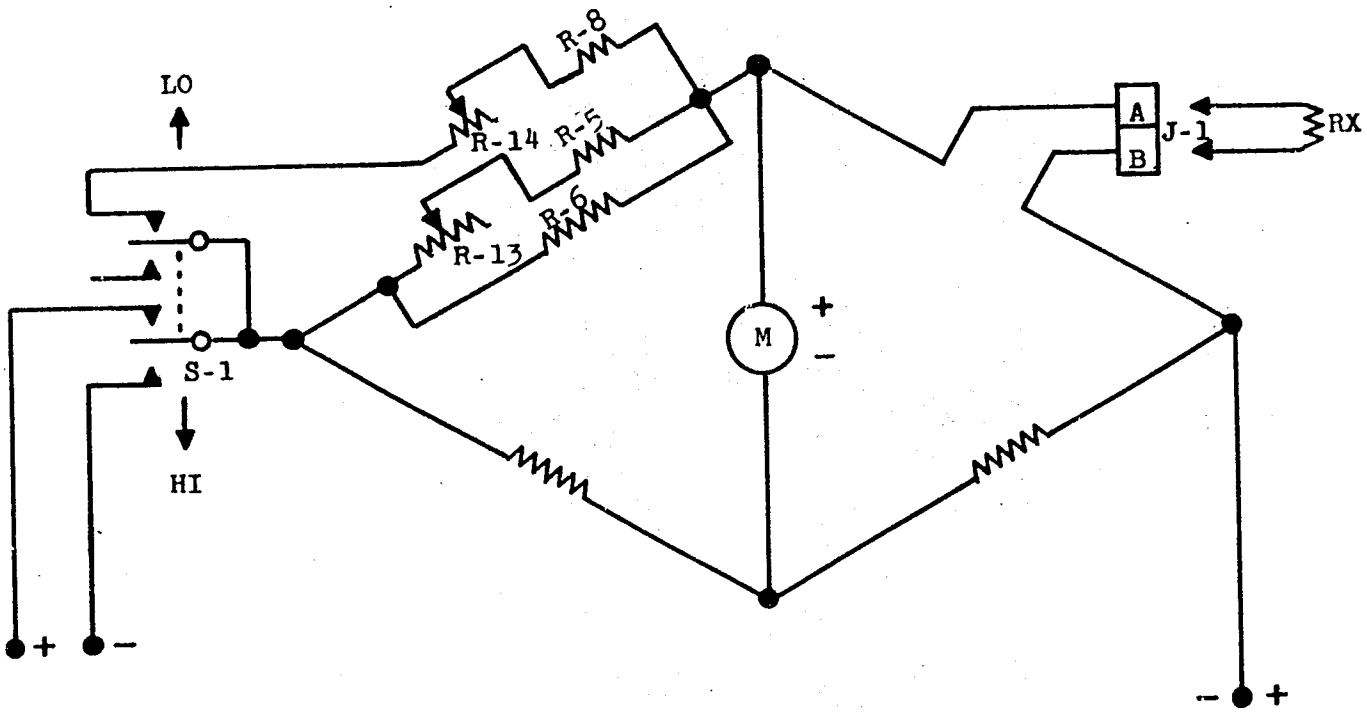

Fig. 6. -- Bridge circuit

[redacted]
UNCLASSIFIED

1184

UNCLASSIFIED

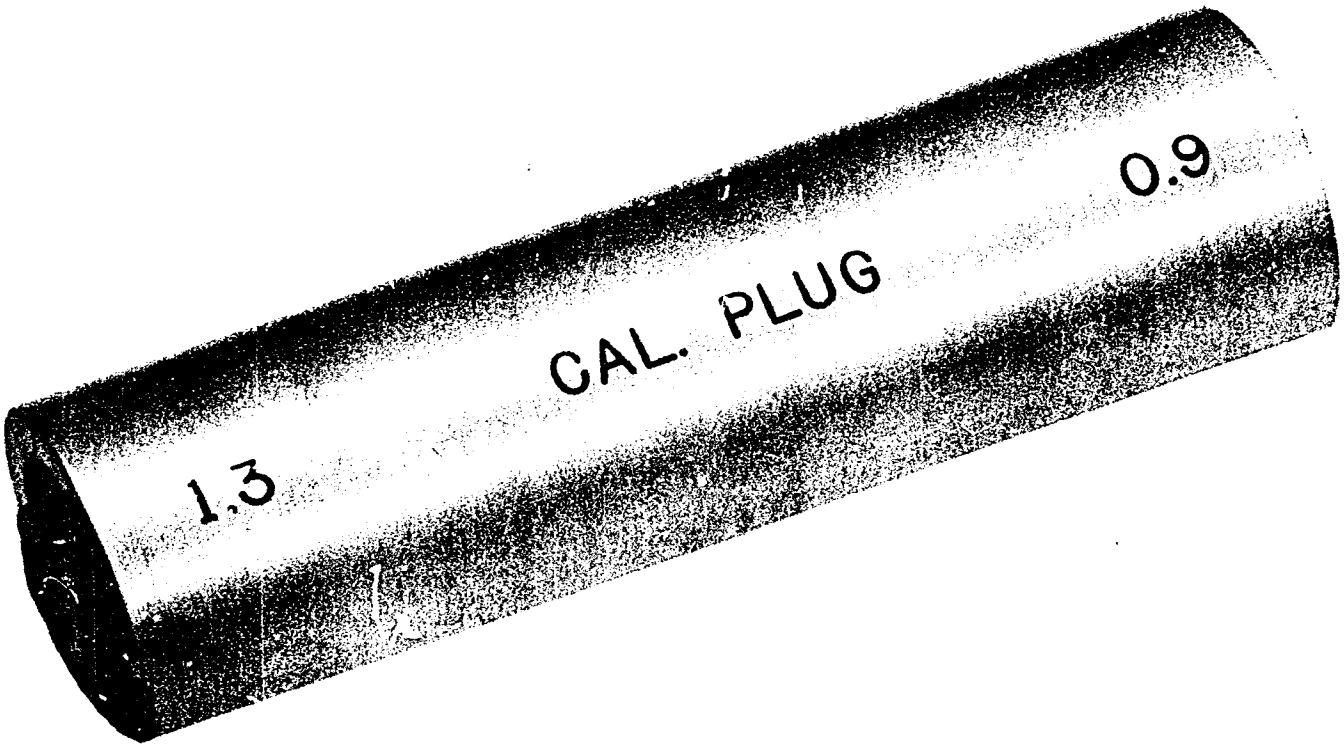

Fig. 7. -- Calibration plug

UNCLASSIFIED

1185

The 0.9-ohm standard resistor is then inserted in J-1. S-1 is held in the LO position, and R-14, which is now in the circuit, is adjusted for balance. The bridge will now balance at either the upper or lower limit of the resistance range, 1.3 to 0.9 ohms, depending on the position of S-1.

The resistance to be tested, RX, is now connected to J-1. S-1 is held in the HI position. If RX is any value less than that required for balance (1.3 ohms) current will flow through the meter causing a deflection in the positive direction. If, however, RX is any value greater than 1.3 ohms, the meter current will be in the opposite direction causing a negative deflection. On the meter scale the region of positive deflection is marked GOOD and that of negative deflection BAD. Therefore a GOOD indication means that RX is less than 1.3 ohms. S-1 is then held in the LO position, applying a potential of opposite polarity to the bridge, and, by adding R-14 to the circuit, reducing the balance point of the bridge to 0.9 ohm. If RX is greater than the balance value, the meter will deflect in the positive or GOOD region, and if RX is less than 0.9 ohm, the deflection will be negative or BAD. If the meter deflects in the positive region for both the HI and LO positions of S-1, the resistance being tested must be between 1.3 and 0.9 ohms.

Figure 8 is the schematic of the bridge circuit for the ground check. The consideration for this phase of the design is that the meter must indicate whether or not the proper wire in the fuze cable is grounded to the shell. When S-2 is depressed, the potential applied to the bridge is connected directly to the fuze shell instead of to pin B of J-1. Since part of the fuze resistance is accounted for in the cable, the effective resistance of the fuze is reduced, and the balance point of the bridge must be changed. This is accomplished by inserting R-7 into the circuit when S-2 is thrown. The bridge will then balance at approximately 0.6 ohm. If the fuze resistance is greater than 0.6 ohm, the meter will indicate GOOD. However, if the fuze resistance is less than the balance value, as would be the case if the wrong wire in the fuze cable were connected to the shell, the meter would indicate BAD.

One ground check, R-18, is in series with the potential applied to the bridge to prevent excessive meter deflection.

Figure 9 shows the connection to the magnetic amplifier. Because of the required current limitation through the fuze, any unbalance in the bridge circuit produces a very small signal, which must be amplified to obtain an indication on a ruggedized meter.

The magnetic amplifier is composed of a system of rectifiers and saturable reactors operating from an a-c source. A d-c control

UNCLASSIFIED

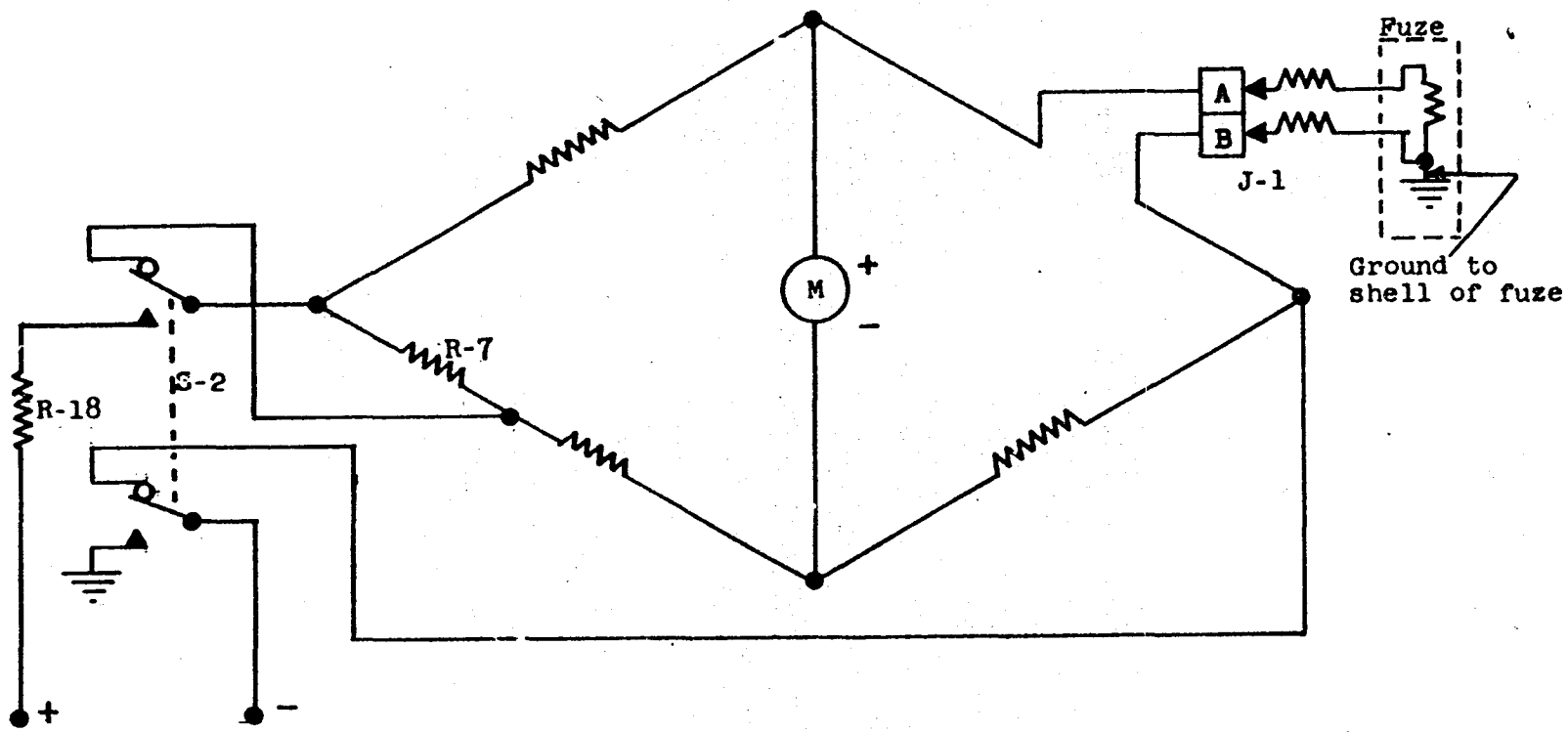

Fig. 8. -- Ground check

UNCLASSIFIED

[redacted]
UNCLASSIFIED

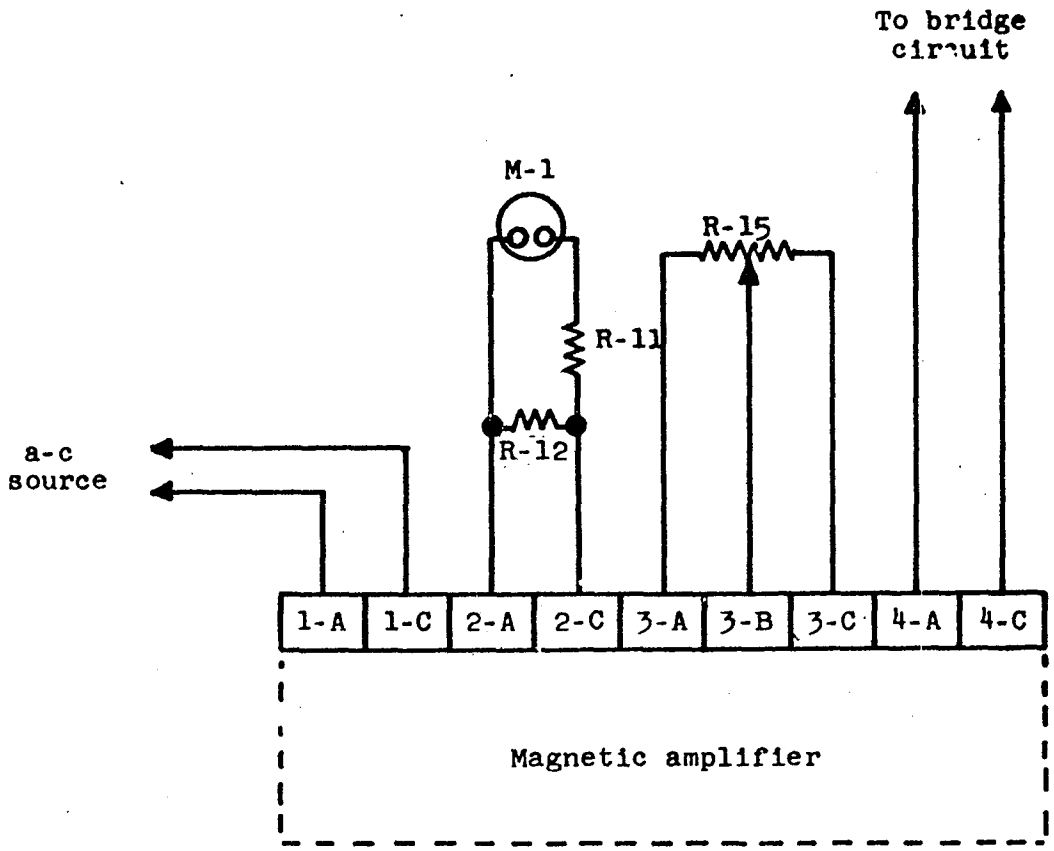

Fig. 9. -- Magnetic amplifier connections

UNCLASSIFIED
[redacted]

1188

winding, supplied by the signal from the bridge, varies the output to the meter. R-12 is a load resistor specified by the manufacturer for optimum operation of the amplifier. R-11 is in series with the meter to limit meter deflection. Potentiometer R-15 is used to adjust the amplifier for zero output when the bridge is balanced, or when there is no power supplied to the bridge.

Figure 10 shows the power source selection circuit. The T-30 will operate from either a d-c supply or an a-c supply. Since the magnetic amplifier requires an a-c source, an inverter is necessary when the T-30 is operating on direct current.

When the T-30 is properly connected to both power sources through cables CT-101 and CT-102 and CB-1 is thrown (CB-2 being OFF), the d-c power is applied to the inverter, which in turn supplies a-c power to the circuit. When CB-2 is thrown, regardless of the position of CB-1, Ry-1 operates, disconnecting the inverter and applying alternating current directly to the circuit.

Because of the inductive load presented by the magnetic amplifier and the transformer, C-1 is necessary for power factor correction.

Figure 11 is a schematic of the bridge power supply. Because of the current limitation of the fuzes (20 ma max) a low d-c voltage must be applied to the bridge. This is accomplished through T-1, CR-1, CR-2, and the voltage dividing network, as shown.

With 110 volts a-c supplied to the primary of T-1, the output of T-1 is approximately 6 volts a-c, and power is supplied to I-1 and also to CR-1 and CR-2 through the voltage dividing network, R-1 and R-2. Rectifiers CR-1 and CR-2 supply voltages of opposite polarity to the bridge. Rectifiers of opposite polarity were used in the T-30 to provide a reversal of meter deflection between the HI and LO tests, thus eliminating the necessity of a more complicated reversing switch for the meter.

UNCLASSIFIED

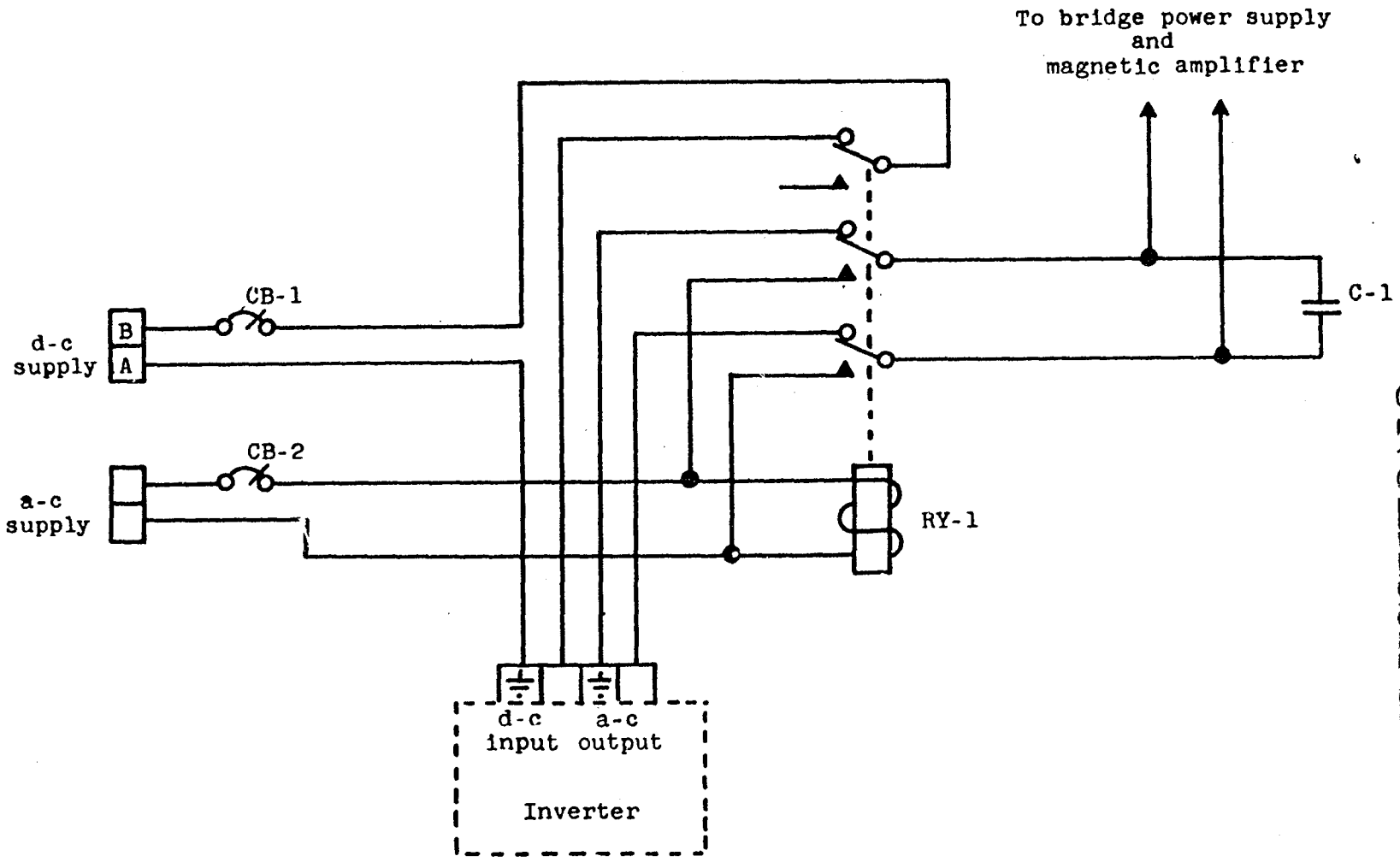

Fig. 10. -- Power supply selection

UNCLASSIFIED

1190

UNCLASSIFIED

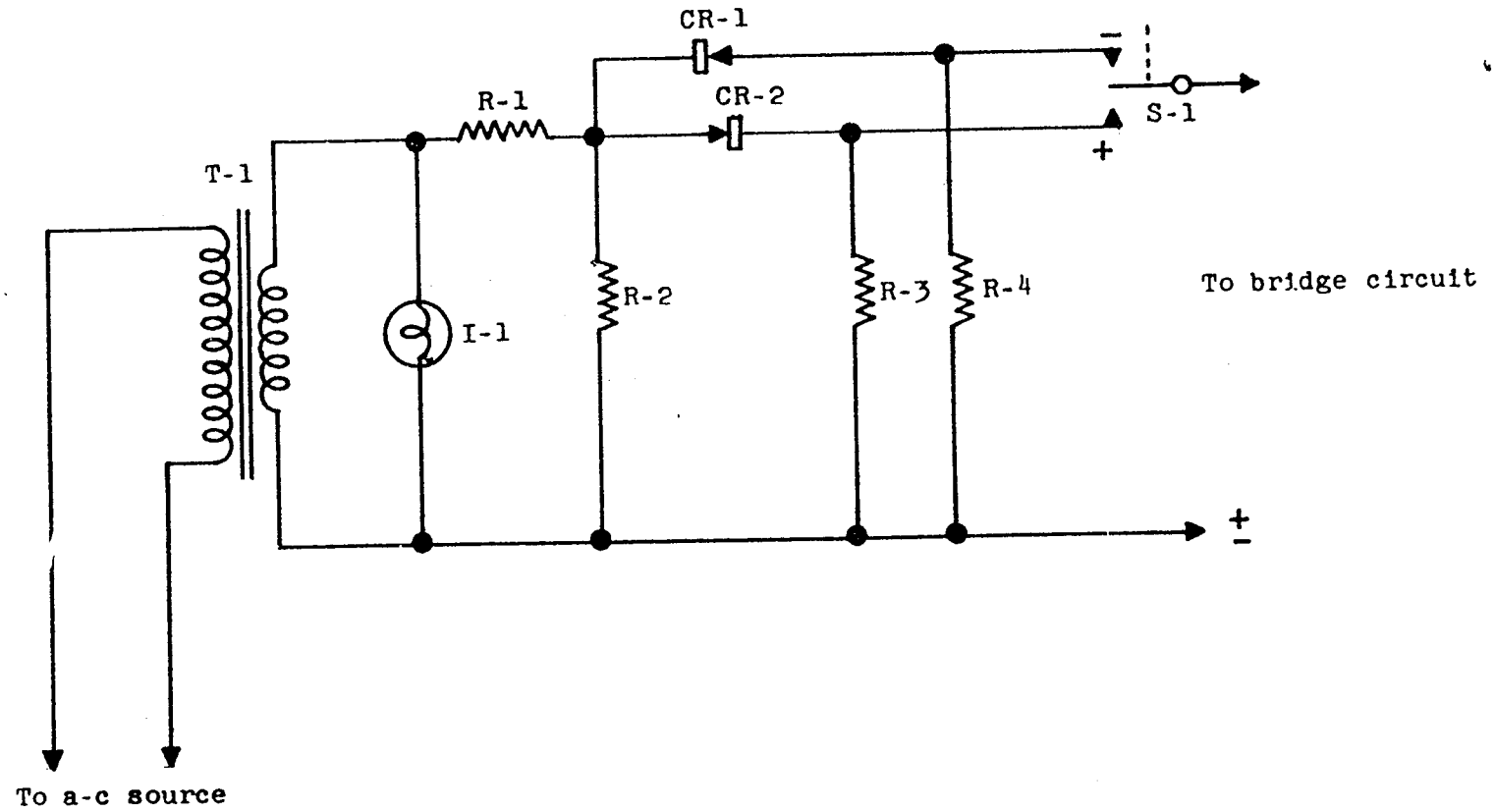

Fig. 11. -- Bridge power supply

UNCLASSIFIED

1191

Appendix A to:
Engineering Report on the Primer Tester (T-30)

Specification: T-30 Preliminary Development Specification, PDS-107.

Drawings and Sketches:

SK(1282)6306	Chassis Assembly
SK(1282)6305	Chassis
SK(1282)6304A	Bracket, Right
SK(1282)6303A	Bracket, Left
SK(1282)6244A	Panel, Front
SK(1282)6737A	Plate, Marker Detail
SK(1282)6736A	Plate, Identification
SK(1282)6263A	Receiver, Safety Chamber 1
SK(1282)6267A	Receiver, Safety Chamber 2
SK(1282)6734C	Schematic
SK(1282)6735C	Parts List

Production drawings are as listed on NX-111050.

Appendix B to:
Engineering Report on the Primer Tester (T-30)

Environmental Test Results

A preproduction T-30 was tested at Sandia Base in accordance with the environmental conditions listed below, which were contained in a memo from Mr. W. H. Lawrence, 1221, to Mr. E. L. Deeter, 5431 (formerly 1282), on the functional operability of test equipment under various environmental conditions.

It should be pointed out for the sake of an equitable evaluation of the T-30 program in its entirety that the comparatively rigid test requirements outlined were imposed after the T-30 was designed and fabricated. To be considered, then, is the fact that some of these belatedly imposed conditions were not considered in the original design outline.

At the end of the first day of operation in accordance with paragraph IIIa, the vibrator failed to operate. Subsequent operational tests were continued utilizing the a-c supply although further checks were continued to determine the status of the vibrator. These checks confirmed the failure of the vibrator.

When the tests were completed the vibrator was inspected, and the cause of failure was attributed to an accumulation of corrosive deposits between the vibrator points and to a loose filter choke connection. After the connection was soldered and the points cleaned, the vibrator became operative under ambient room conditions. For the future it is strongly recommended that the choke be mounted to resist vibrational failure and that the vibrator be hermetically sealed.

During the salt spray test (paragraph IV) no meter indications were obtained for the "Hi" and "Lo" checks. Subsequent to this, functional operation ceased entirely because switch CB-2 failed.

A post-test check revealed that the lack of indication was due to the introduction of high impedance by switch S-2. Examination of switches CB-2 and S-2 revealed deposits on the contacts.

Final physical examination revealed extensive corrosion on the condenser (C-1) can, potentiometer (R-13, 14, 15) cases, and some hardware. But as a unit the T-30 met the condition of paragraph IV, section a.1.

COPY COPY

ENVIRONMENTAL TESTS FOR T-30

I Vibration

Each piece of test equipment shall operate satisfactorily at the completion of the following test.

a. Packaged

Frequency Range cps	Constant Amplitude	Limiting g.	Duration of each 3 planes
10-30	.1	5g	25 min.
30-60	.06	10g	25 min.

II Shock

Each piece of test equipment shall operate satisfactorily at the completion of the following test:

b. Packaged
25 drops from 4 inches
12 drops from 12 inches

III Temperature and Humidity

Each piece of test equipment shall operate satisfactorily at the completion of the following test times, and while still under specified conditions.

a. Tropic sequence - moisture absorption test:

After a pre-conditioning exposure of 24 hours at 130°F and 15% relative humidity, expose the equipment to 5 cycles of the following test at 90-95% RH throughout the cycle.

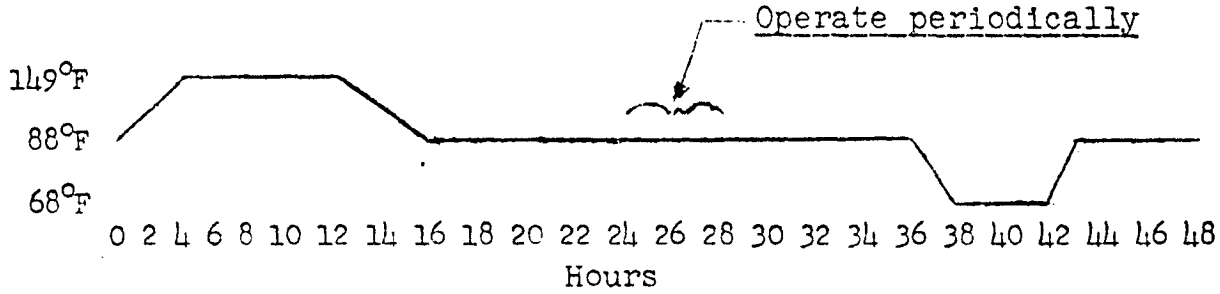

b. Desert Sequence-
Subject the equipment to 160°F at 5% RH for 50 hours and while still in the chamber the equipment shall be operated as required in its detailed specification. T-30 to be run at 130°F for 8 hours first.

c. Arctic Sequence-
Subject the equipment to -65°F for 72 hours and while still in the chamber the equipment shall be operated as required in its detailed specification.

V Salt Spray Test

a. Each item of equipment shall be exposed for 100 hours to a salt spray test as specified in MIL-E-5272, section 4.6.1. Exposure shall be with the equipment in its carrying case ready for use, i.e. with the cover removed. The criteria for acceptance are:

(1) Less than one per cent of total surface area shows corrosion after being washed in clear water to remove deposits of salt, and;

(2) Functional operation shall be unimpaired.

INITIAL DISTRIBUTION

1/80A	Brig. Gen. James F. McCormack, DMA
2/80A	C. L. Tyler, SFOO
3/80A	D. F. Worth, AEC
4/80A	R. C. Smith, Los Alamos
5-54/80A	AFSWP, R D
55/80A	R. W. Henderson, 1200
56/80A	L. G. Abraham, 5400
57/80A	C. E. Runyan, 1220
58/80A	K. O. Thorp, 1230
59/80A	A. F. Cone, 1510
60/80A	G. H. Roth, 1520
61/80A	L. J. Biskner, 2530
62/80A	W. O. McCord, 5310
63/80A	P. F. Meigs, 1714
64/80A	H. E. Viney, 1521
65/80A	R. J. Dill, 2542
66/80A	E. L. Deeter, 5431
67-80/80A	Document Room