[redacted]

R-149

Prepared by Dept 2320, Sandia Corp

UNCLASSIFIED

SM PT1143-2

AF195421-004

Classification cancelled (or changed to _____ (Insert appropriate classification)

by authority of _____ (Person authorizing change in classification)

by _____ (Signature of person making the change)

PRODUCT TEST EQUIPMENT SERIES

Operation and Maintenance Instructions

PT1143

SANDIA SYSTEMATIC DECLASSIFICATION REVIEW
DOWNGRADING OR DECLASSIFICATION STAMP

CLASSIFICATION CHANGED TO: U	AUTHORITY: R B Crane
PERSON CHANGING MARKING & DATE: Emelda Selph 12/2/96	RECORD ID: 97SN1109
PERSON VERIFYING MARKING & DATE: Carmela Gallegos 1/1/97	DATED: 12/2/96

SANDIA CORPORATION

Contractor for U. S. Atomic Energy Commission

ALBUQUERQUE, NEW MEXICO

Change Notice: Latest revised pages supersede the same pages previously issued. Insert revised pages into present publication. Dispose of superseded pages in accordance with applicable regulations.

THE BASIC ISSUE OF THIS PUBLICATION DATED 14 FEBRUARY 1964 SUPERSEDED SM PT1143-2 DATED 30 SEPTEMBER 1963.

SANDIA SYSTEMATIC DECLASSIFICATION REVIEW

1st Review Date: 11-12-96	Determination (Circle Numbers):
Authority: ☐ ADC ☒ ADD	1. Classification Retained
Name: W. Loyd	2. Classification Changed to: U
2nd Review Date: 12/2/96	3. Contains No DOE Classified Information
Authority: ADC	4. Coordinate With:
Name: R B Crane	5. Contains UCNI:
	6. Comments: Of for Opinion

UNCLASSIFIED

AEC - Sandia Corp, Albuquerque

14 FEBRUARY 1964

Change 2 - 22 May 1964

[redacted]

UNCLASSIFIED

LIST OF EFFECTIVE PAGES

Insert latest revised pages, dispose of superseded pages in accordance with applicable regulations.

NOTE: On a revised page, the portion of the text affected by the latest change is indicated by a vertical line in the outer margin of the page.

TOTAL NUMBER OF PAGES IN THIS MANUAL IS 37, CONSISTING OF THE FOLLOWING:

Page No.	Latest Change No.
Title	2
A	2
i & ii	2
1 thru 3	Original
4 thru 14	2
14A & 14B	2
15 thru 17	Original
18	2
19 thru 31	Original

UNCLASSIFIED

TABLE OF CONTENTS

Section		Page
1	INTRODUCTION	1
	1-1 Purpose	1
	1-2 Scope	1
2	DESCRIPTION	1
	2-1 Capability	1
	2-2 Physical Description	1
	2-3 Functional Description	1
	2-4 Modifications	1
3	PREPARATION FOR USE	4
	3-1 Facilities Necessary	4
	3-2 Assembly and Connections	4
	3-3 Calibration	4
4	OPERATING INSTRUCTIONS	5
	4-1 General	5
	4-2 MC1414/1414A Tests	5
	4-3 MC1833(WR) Tests	7
	4-4 MC1853(WR) Tests	8
	4-5 MC1833-TRA/1853-TRA Tests	13
5	MAINTENANCE	15
	5-1 Periodic Inspection	15
	5-2 Corrective Maintenance	15
6	CALIBRATION	17
	6-1 General	17
	6-2 Procedure	17
7	STORAGE AND SHIPMENT	19
	7-1 Preparation for Storage	19
	7-2 Storage Inspection	19
	7-3 Packaging for Shipment	19
8	SCHEMATICS	21
	8-1 Apparatus List	21
	8-2 Schematic Diagrams	21

UNCLASSIFIED

LIST OF ILLUSTRATIONS

Figure		Page
2-1	PT1143-P1 and -P2 Panel Assemblies	2
2-2	Simplified Schematic of Continuity Test Circuit	3
2-3	Simplified Schematic of Isolation Test Circuit	3
8-1	Schematic of PT1143 Power Supply (PT1143-P1)	25
8-2	Schematic of PT1143 Continuity Test Circuit (Part of PT1143-P2), Issue E of Schematic Dwg No. CK176748	27
8-3	Schematic of PT1143 Continuity Test Circuit (Part of PT1143-P2), Issue G of Schematic Dwg No. CK176748	29
8-4	Schematic of PT1143 Isolation Test Circuit (Part of PT1143-P2), Issue E of Schematic Dwg No. CK176748	30
8-5	Schematic of PT1143 Isolation Test Circuit (Part of PT1143-P2), Issue G of Schematic Dwg No. CK176748	31

LIST OF TABLES

Table		Page
2-1	PT Capability	4
4-1	Switch Positions Versus Meter Readings, MC1414/1414A Tests	6
4-2	Switch Positions Versus Meter Readings, MC1833(WR) Tests	9
4-3	Switch Positions Versus Meter Readings, MC1853(WR) Tests	12
4-4	Switch Positions Versus Meter Readings, MC1833-TRA/1853-TRA Tests	14
6-1	Calibration Equipment	17
8-1	Apparatus List	21
8-2	Switch Position Versus Continuity Loop Terminations	28
8-3	PT1143-C1 Point-to-Point Wiring	29

[redacted]

[redacted] UNCLASSIFIED

SECTION 1

INTRODUCTION

1-1 PURPOSE.

This manual has been prepared for the use of persons responsible for the operation and maintenance of the PT1143.

1-2 SCOPE.

1-2.1 This manual contains operation and maintenance information for the PT1143.

1-2.2 Subsequent versions of the tester (identified by suffix number) will be incorporated in this manual and will be differentiated as necessary from the original version of the tester.

1-2.3 Changes to the test set will be reflected in this manual only when they involve changes to capability, operating procedures, calibrating procedures and/or schematics.

SECTION 2

DESCRIPTION

2-1 CAPABILITY.

2-1.1 PT1143 is defined by drawing 176708 and is designed to perform isolation and continuity tests on the units identified in table 2-1. Table 2-1 provides the capability of each part number version of the tester. Changes to the table will be made only if the tester change or product change affects procedures or schematics.

2-1.2 Approximately 4 to 12 units may be tested with the PT1143 per 8-hr day.

2-2 PHYSICAL DESCRIPTION.

The PT1143 test set consists of the PT1143-P1 power supply and PT1143-P2 switching panel assemblies (figure 2-1), and the PT1143-C1 multiwire cable which interconnects the PT1143-P2 and the unit under test.

2-3 FUNCTIONAL DESCRIPTION.

Refer to the simplified schematic of the continuity test circuit (figure 2-2) and isolation test circuit (figure 2-3). PT1143 provides dc voltage and meter circuits for testing the continuity or isolation of circuits in the component under test.

2-4 MODIFICATIONS.

2-4.1 Modification of PT1143 from P/N 176708-000 model No. 1 to P/N 176708-002 model No. 3 include the following changes to panel PT1143-P2.

2-4.1.1 The change of S217 from a 4-pole to an 8-pole switch and circuitry added to the continuity test circuit to enable the PT to test MC1833 and MC1853 units.

2-4.1.2 The addition of resistors R233 thru R243 and associated circuitry between the ISOLATION B switch and connectors J201 and J202 to provide five additional isolation test switch positions to the PT for testing MC1833 and MC1853 units.

2-4.2 Modification of PT1143 from P/N 176708-002 model No. 3 to P/N 176708-004 model No. 5 include the following changes to panel PT1143-P2.

2-4.2.1 Additional circuitry was added between the ISOLATION A switch and connector J201 to provide 1 additional isolation test to the PT for testing MC1833 and MC1853 units.

2-4.2.2 The removal of K1 and K2 relay and the addition of three additional switch sections and associated circuitry to TEST SELECT switch to improve reliability.

[redacted]

UNCLASSIFIED

[redacted]

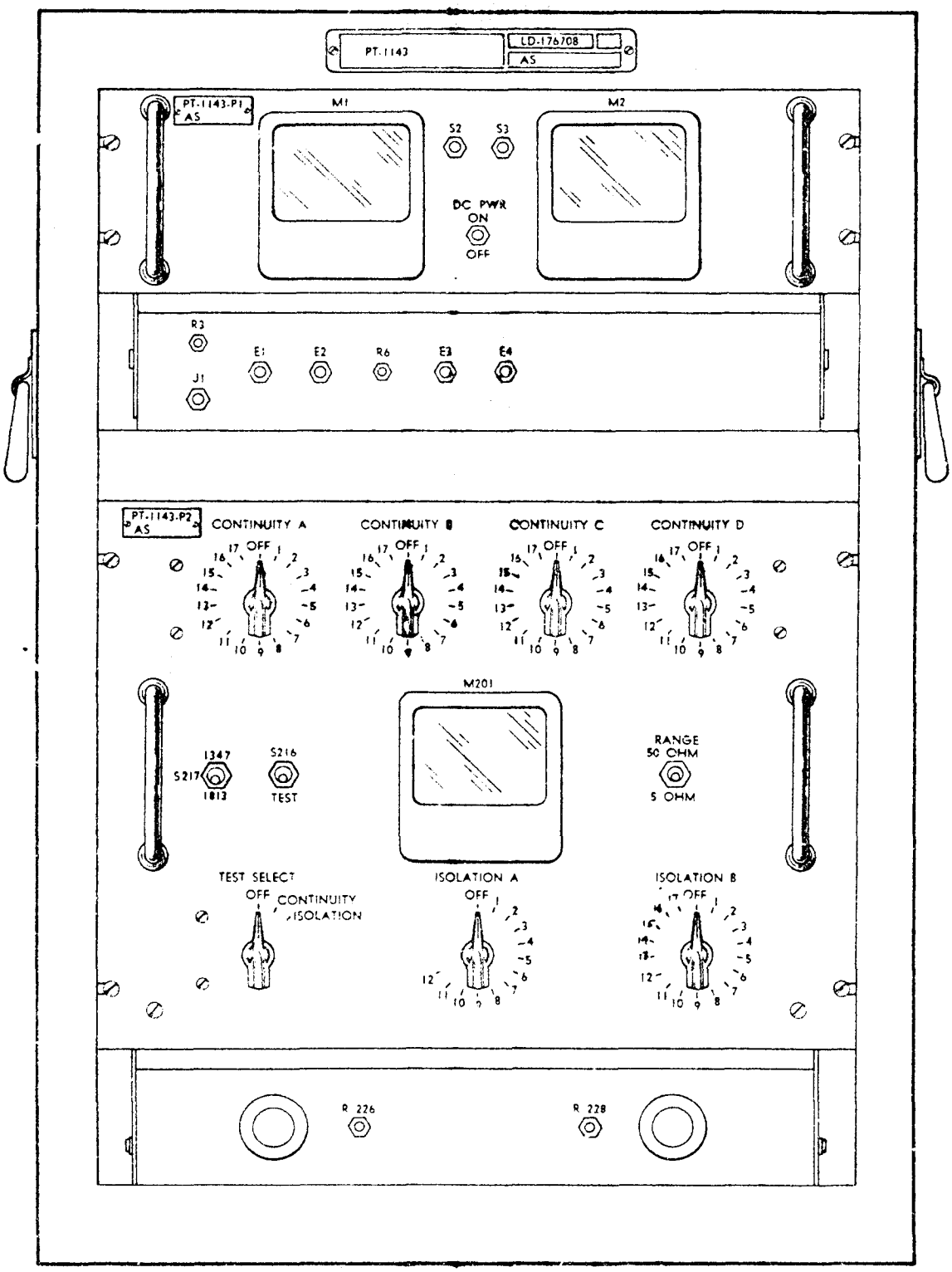

Figure 2-1 PT1143-P1 and -P2 Panel Assemblies

[redacted]

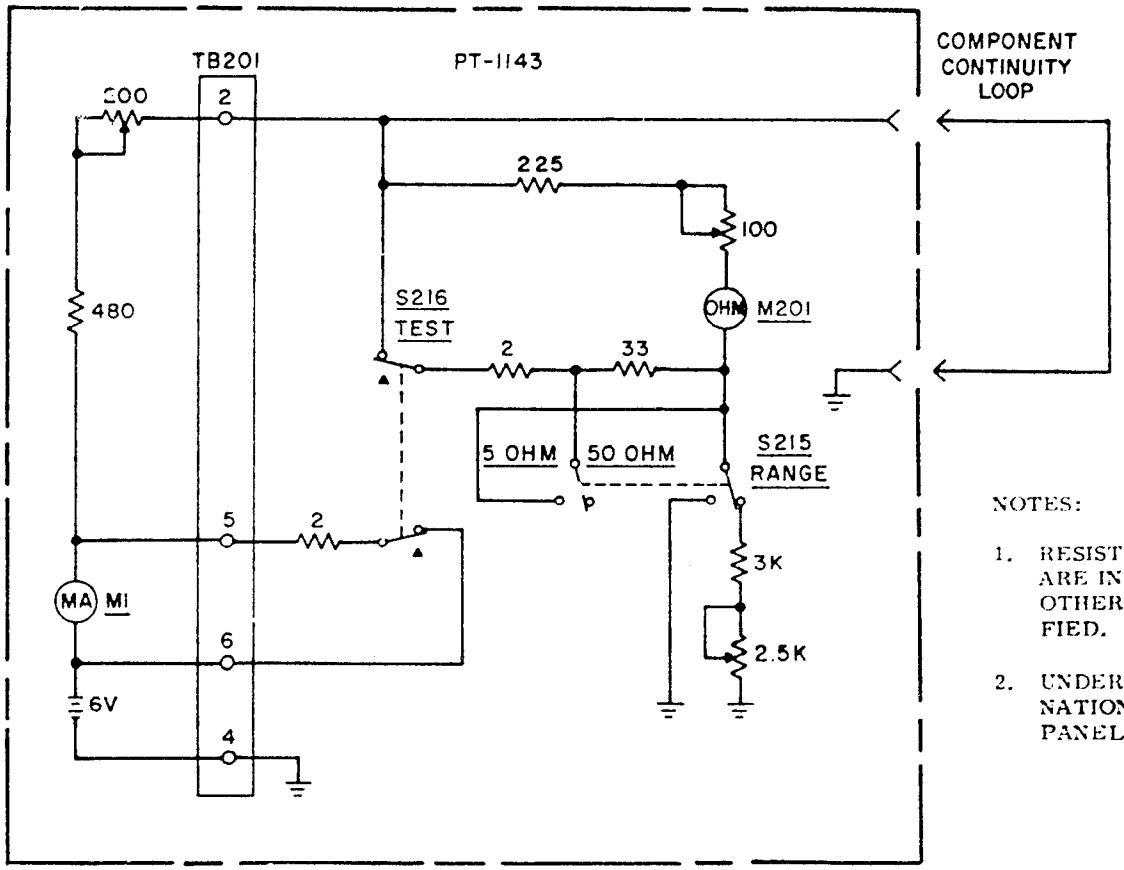

NOTES:

1. RESISTANCE VALUES ARE IN OHMS UNLESS OTHERWISE SPECIFIED.
2. UNDERLINED DESIGNATIONS INDICATE PANEL MARKINGS.

Figure 2-2 Simplified Schematic of Continuity Test Circuit

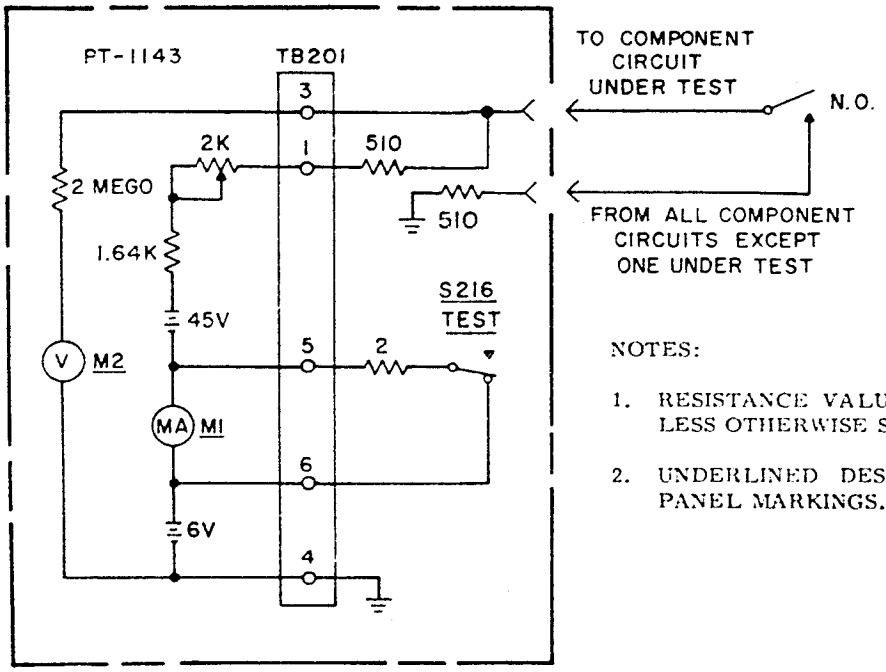

NOTES:

1. RESISTANCE VALUES ARE IN OHMS UNLESS OTHERWISE SPECIFIED.
2. UNDERLINED DESIGNATIONS INDICATE PANEL MARKINGS.

Figure 2-3 Simplified Schematic of Isolation Test Circuit

TABLE 2-1

PT CAPABILITY

PT PART NUMBER	PART NUMBER OF COMPONENTS TESTED			
	MC1414 Preflight Selection Bomb Subassembly	MC1414A Preflight Selection Bomb Subassembly	MC1833 Preflight Selection Bomb Subassembly	MC1853 Preflight Selection Bomb Subassembly
176708-000	311219-00	311632-00	-	-
176708-002	311219-00	311632-00	311782-00	311804-00

SECTION 3

PREPARATION FOR USE

3-1 FACILITIES NECESSARY.

3-1.1 POWER. Power required for the PT1143 is supplied by batteries in the test set.

3-1.2 SPACE. PT1143 requires a space approximately 2 ft wide by 3 ft high by 1-1/2 ft deep.

3-2 ASSEMBLY AND CONNECTIONS.

Unpackage and assemble the PT1143. Install, as required, all components that were removed and packaged separately for storage; connect batteries as shown in figure 8-1. Check to see that J1 of PT-1143-P2 is connected to J2 of PT1143-P1, and that TB201 of PT1143-P2 is connected pin-to-pin to TB1 of PT1143-P1.

3-3 CALIBRATION.

Inspect the PT1143 according to procedures in paragraphs 5-1.2 and 5-1.3, and calibrate in accordance with procedures in Section 6.

SECTION 4

OPERATING INSTRUCTIONS

4-1 GENERAL.

This section contains operating instructions for testing the MC1414/1414A, MC1833, and MC1853 with the PT1143. Only test sets modified to P/N 176708-002 are capable of testing MC1833 and MC1853 units.

4-2 MC1414/1414A TESTS.

4-2.1 PREPARATION FOR TESTS. In addition to the PT1143, the H1119 if available, otherwise the H666 Electrical Wrench is required to test the MC-1414/1414A.

4-2.1.1 On PT1143-P2 operate RANGE switch to 5 OHM position, S217 switch to 1347 position, and verify that all other switches are in OFF position. On PT1143-P1, verify that DC PWR switch is in OFF position.

4-2.1.2 Perform following check at beginning of each day that PT1143 is used to test components.

4-2.1.2.1 Operate DC PWR switch to ON. Operate and hold S2 switch to on position and S216 switch to TEST position. Meter M1 on PT1143-P1 reads 9.8 ma or more. Release S2 and S216.

4-2.1.2.2 Operate and hold S3 switch to on position and S216 to TEST. M1 reads 4.4 - 4.8 ma. Release S3 and S216, and operate DC PWR switch to OFF.

4-2.1.2.3 If M1 fails to read as specified in paragraph 4-2.1.2.1 or 4-2.1.2.2, notify the agency responsible for calibrating and maintaining the PT.

4-2.1.3 Disconnect P213 from P203 of PT1143-C1 and disconnect pin protectors from P201, P202, P204, and P205.

4-2.1.4 Verify that P211, P212, and P223 of PT1143-C1 are connected to J201, J202, and J203, respectively, on rear of PT1143-P2.

4-2.1.5 Connect P201 of PT1143-C1 to J2 of MC1414/1414A, located under access door. Connect P203, P204, and P205 of the cable to P1, P2, and J1, respectively, of MC1347 Interconnecting Box.

4-2.1.6 Connect alligator clip E206 of the cable to a MC1411 Breakaway Pulse Connector Assembly mounting screw.

4-2.1.7 Insert electrical wrench into center hole of J1 of MC1411 and rotate electrical wrench 13-1/2 to 14-1/2 turns ccw. Remove electrical wrench from MC1411.

4-2.1.8 Connect P202 of PT1143-C1 to J1 of MC-1411.

4-2.1.9 Operate DC PWR switch to ON. On MC1349 Strike Selector Switch Pack, operate OPTIONS switches to RE and LO and BURST HT. switch to LO. These switches are located behind access door of weapon.

4-2.1.10 On PT1143, rotate TEST SELECT switch to CONTINUITY position.

4-2.2 CONTINUITY TESTS. Operate switches to each position in the sequence specified in table 4-1. After a rotary switch (CONTINUITY A, B, C, or D) is moved to each new position, verify that M201 reads 1.5 ohms or less (without operating S216 switch) and verify that M1 reads more than 9.5 ma with S216 switch in TEST position unless otherwise specified in table. Then verify that M201 reads within the limits specified in the table (with S216 switch operated) and perform any final procedures that may be specified in the table. Except when verifying that M201 reads 1.5 ohms or less as the first step after moving a rotary switch to each new position, be sure to operate S216 switch to read M201. In these procedures, ignore meter readings which are not specified.

4-2.3 ISOLATION TEST PRELIMINARY CHECK. On PT1143, rotate TEST SELECT switch to ISOLATION position. Rotate ISOLATION A switch to position 1. M1 reads 5 ma or less. Operate and hold S216 to TEST. M1 reads 4.3 - 4.9 ma. Release S216. If M1 fails to read as specified, notify the agency responsible for calibrating and maintaining the PT.

4-2.4 ISOLATION TESTS.

4-2.4.1 Route ISOLATION A switch to position 2. M1 reads 5 ma or less. Operate and hold S216 to TEST. M1 reads less than 1.0 ma and M2 reads more than 22.5 v. Release S216.

4-2.4.2 Repeat procedures in paragraph 4-2.4.1 with ISOLATION A switch in positions 3 through 12 in that order.

4-2.4.3 Rotate ISOLATION A switch to OFF.

TABLE 4-1

SWITCH POSITIONS VERSUS METER READINGS, MC1414/1414A TESTS

SEQUENCE	RANGE SWITCH POSITION	ROTARY SWITCH	ROTARY SWITCH POSITIONS	M201 LIMITS (Ohms)	FINAL PROCEDURE
1	5 OHM	CONTINUITY A	1	0.8 - 1.2*	-
2	50 OHM	CONTINUITY A	2	2.2 or less	-
3 thru 6	5 OHM	CONTINUITY A	3 thru 6	0.25 or less	If M201 reads more than 1 ohm with CONTINUITY A switch in position 3, 4, 5, or 6, disconnect P202 of PT1143-C1 from J1 of MC1411. Insert H666 into center hole of J1 of MC1411 and rotate H666 a maximum of 1-1/2 additional turns ccw. Remove H666 from MC1411 and reconnect P202 of PT1143-C1 to J1 of MC1411. Repeat the test.
7	5 OHM	CONTINUITY A	-	-	After completing tests with CONTINUITY A switch in position 6, disconnect P202 of PT1143-C1 from J1 of MC1411. Insert H666 into center hole of J1 and rotate H666 cw as far as it will go. Remove H666 from MC1411 and reconnect P202 to J1.
8 thru 17	5 OHM	CONTINUITY A	7 thru 16	0.25 or less	-
18	5 OHM	CONTINUITY A	OFF	-	-
19	5 OHM	CONTINUITY B	1	0.8 - 1.2*	-
20 thru 26	5 OHM	CONTINUITY B	2 thru 8	0.25 or less	-
27, 28	5 OHM	CONTINUITY B	9, 10	1.9 - 2.6 for MC1414 tests; 3.5 - 5.5 for MC1414A tests	- If M201 reads more than 5.0, operate RANGE switch to 50 OHM position. Before operating S216 to TEST, verify that M201 reads 0.70 ohm or less. M1 reads more than 9 ma with S216 operated.
29 thru 32	5 OHM	CONTINUITY B	11 thru 14	1.9 - 2.6	-
33, 34	5 OHM	CONTINUITY B	15, 16	0.5 - 1.5	-
35	5 OHM	CONTINUITY B	OFF	-	-
36	5 OHM	CONTINUITY C	1	0.8 - 1.2*	-
37	50 OHM	CONTINUITY C	2	3.5 - 4.5	Check to see that RANGE switch is in 50-OHM position. Before operating S216 to TEST, verify that M201 reads 0.70 ohm or less. M1 reads more than 9 ma with S216 operated.

(Continued on next page; see footnote at end of table)

TABLE 4-1
(Continued)

SEQUENCE	RANGE SWITCH POSITION	ROTARY SWITCH	ROTARY SWITCH POSITIONS	M201 LIMITS (Ohms)	FINAL PROCEDURE
38	5 OHM	CONTINUITY C	-	-	Operate OPTIONS switches to FF and ME and verify that BURST HT. switch is in LO.
39 thru 49	5 OHM	CONTINUITY C	3 thru 13	0.25 or less	-
50	5 OHM	CONTINUITY C	OFF	-	-
51	5 OHM	CONTINUITY D	1	0.8 - 1.2*	When tests are complete with CONTINUITY D switch in position 1, operate OPTIONS switches on MC1349 to FF and ME. Operate BURST HT. switch to HI.
52	5 OHM	CONTINUITY D	2	0.25 or less	When tests are complete with CONTINUITY D switch in position 2, operate OPTIONS switches on MC1349 to DB and HI. Operate BURST HT. switch to LO.
53 thru 61	5 OHM	CONTINUITY D	3 thru 11	0.25 or less	-
62	5 OHM	CONTINUITY D	OFF	-	-
63	5 OHM	-	-	-	On MC1349, operate OPTIONS switches to RE and LO. Verify that BURST HT. switch is in LO. Proceed to para 4-2.3.

*If M201 reads outside limits, troubleshoot tester (paragraph 5-2.2)

4-2.4.4 Repeat procedure in paragraph 4-2.3 with ISOLATION B switch in position 1.

4-2.4.5 Repeat procedure in paragraph 4-2.4.1 with ISOLATION B switch in positions 2 through 11.

4-2.4.5A Operate OPTIONS switches to DB and ME. Repeat procedure in paragraph 4-2.4.1 with ISOLATION B switch in positions 14 through 17.

4-2.4.5B Operate OPTIONS switches to RE and LO.

4-2.4.6 Rotate ISOLATION B switch to OFF and TEST SELECT switch to CONTINUITY.

4-2.5 CONTINUITY CHECK.

4-2.5.1 Rotate CONTINUITY A switch to position 2 and operate RANGE switch to 50 OHM. M201 reads 1.5 ohms or less. Operate and hold S216 to TEST. M1 reads more than 9.5 ma. M201 reads 2.2 ohms or less. Release S216, rotate CONTINUITY A switch to OFF and operate DC PWR switch to OFF. Rotate TEST SELECT switch to OFF.

4-2.5.2 Disconnect all PT1143-C1 to component connections. Inspect component and PT cable connectors for bent pins and punctured inserts. Connect P213 to P203 of PT1143-C1 and install protector caps on all other loose connectors.

4-3 MC1833 TESTS.

4-3.1 PREPARATION FOR TESTS. In addition to the PT1143, the H1119 Electrical Connector Wrench is required to test the MC1833.

4-3.1.1 On PT1143-P2, operate RANGE switch to 5 OHM position, S217 switch to 1813 position and verify that all other switches are in OFF position. On PT1143-P1, verify that DC PWR switch is in OFF position.

4-3.1.2 Perform following check at beginning of each day that PT1143 is used to test components.

4-3.1.2.1 Operate DC PWR switch to ON. Operate and hold S2 switch to on position and S216 switch to TEST position. Meter M1 on PT1143-P1 reads 9.8 ma or more. Release S2 and S216.

4-3.1.2.2 Operate and hold S3 switch to on position and S216 to TEST. M1 reads 4.4 - 4.8 ma. Release S3 and S216, and operate DC PWR switch to OFF.

4-3.1.2.3 If M1 fails to read as specified in paragraph 4-3.1.2.1 or 4-3.1.2.2 notify the agency responsible for calibrating and maintaining the PT.

4-3.1.3 Disconnect P213 from P203 of PT1143-C1 and disconnect pin protectors from P221, P222, P204, and P205.

4-3.1.4 Verify that P211, P212, and P223 of PT1143-C1 are connected to J201, J202, and J203 respectively, on rear of PT1143-P2.

4-3.1.5 Connect P221 of PT1143-C1 to J2 of MC1833, located under access door. Connect P203, P204, and P205 of the cable to P21, P22, and J1, respectively, of MC1813 Interconnecting Box.

4-3.1.6 Connect alligator clip E206 of the cable to a MC1766 Breakaway Pulse Connector Assembly mounting screw.

4-3.1.7 Insert the H1119 into center hole of J1 of MC1833 and rotate H1119 13-1/2 to 14-1/2 turns ccw. Remove H1119 from MC1833.

4-3.1.8 Connect P222 of PT1143-C1 to J1 of MC1833.

4-3.1.9 Operate DC PWR switch to ON. On MC1349 Strike Selector Switch Pack, operate OPTIONS switches to RE and LO and BURST HT. switch to LO. These switches are located behind access door of weapon.

4-3.1.10 On PT1143, rotate TEST SELECT switch to CONTINUITY position.

4-3.2 CONTINUITY TESTS. Operate switches to each position in the sequence specified in table 4-2. After a rotary switch (CONTINUITY A, B, C, or D) is moved to each new position, verify that M201 reads 1.5 ohms or less (without operating S216 switch) and verify that M1 reads more than 9.5 ma with S216 switch in TEST position unless otherwise specified in table. Then verify that M201 reads within the limits specified in the table (with S216 switch operated) and perform any final procedures that may be specified in the table. Except when verifying that M201 reads 1.5 ohms or less as the first step after moving a rotary switch to each new position, be sure to operate S216 switch to read M201. In these procedures, ignore meter readings which are not specified.

4-3.3 ISOLATION TEST PRELIMINARY CHECK. On PT1143, rotate TEST SELECT switch to ISOLATION position. Rotate ISOLATION A switch to position 1. M1 reads 5 ma or less. Operate and hold S216 to TEST. M1 reads 4.3 - 4.9 ma. Release S216. If M1 fails to read as specified, notify the agency responsible for calibrating and maintaining the PT.

4-3.4 ISOLATION TESTS.

4-3.4.1 Rotate ISOLATION A switch to position 2. M1 reads 5 ma or less. Operate and hold S216 to TEST. M1 reads less than 1.0 ma and M2 reads more than 22.5 v. Release S216.

4-3.4.2 Repeat procedures in paragraph 4-3.4.1 with ISOLATION A switch in positions 3 through 12 in that order.

4-3.4.3 Rotate ISOLATION A switch to OFF.

4-3.4.4 Repeat procedure in paragraph 4-3.3 with ISOLATION B switch in position 1.

4-3.4.5 Repeat procedure in paragraph 4-3.4.1 with ISOLATION B switch in positions 2 through 12.

4-3.4.5A Operate OPTIONS switches to DB and ME. Repeat procedure in paragraph 4-3.4.1 with ISOLATION B switch in positions 14 through 17.

4-3.4.5B Operate OPTIONS switches to RE and LO.

4-3.4.6 Rotate ISOLATION B switch to OFF and TEST SELECT switch to CONTINUITY.

4-3.5 CONTINUITY CHECK.

4-3.5.1 Rotate CONTINUITY A switch to position 2. M201 reads 1.5 ohms or less. Operate and hold S216 to TEST. M1 reads more than 9.5 ma. M201 reads 1.5 ohms or less. Release S216, rotate CONTINUITY A switch to OFF and operate DC PWR switch to OFF. Rotate TEST SELECT switch to OFF.

4-3.5.2 Disconnect all PT1143-C1 to component connections. Inspect component and PT cable connectors for bent pins and punctured inserts. Connect P213 to P203 of PT1143-C1 and install protector caps on all other loose connectors.

4-4 MC1853 TESTS.

4-4.1 PREPARATION FOR TESTS. In addition to the PT1143, the H1119 Electrical Connector Wrench is required to test the MC1853.

4-4.1.1 On PT1143-P2, operate RANGE switch to 5 OHM position, S217 switch to 1813 position, and verify that all other switches are in OFF position. On PT1143-P1, verify that DC PWR switch is in OFF position.

TABLE 4-2

SWITCH POSITIONS VERSUS METER READINGS, MC1833(WR) TESTS

SEQUENCE	RANGE SWITCH POSITION	ROTARY SWITCH	ROTARY SWITCH POSITIONS	M201 LIMITS	FINAL PROCEDURE
1	5 OHM	CONTINUITY A	1	0.8 - 1.2*	-
2	5 OHM	CONTINUITY A	17	0.5 or less	-
3	50 OHM	CONTINUITY A	2	2.2 (22 ohms) or less	Before operating S216 to TEST, verify that M201 reads 0.70 or less. M1 reads more than 9 ma with S216 operated. If M201 reads 0.5 (5 ohms) or less, change RANGE switch to 5 OHM position for greater reading accuracy.
4 thru 7	5 OHM	CONTINUITY A	3 thru 6	0.5 or less	If M201 reads more than 1 ohm with CONTINUITY A switch in position 3, 4, 5, or 6, disconnect P222 of PT1143-C1 from J1 of MC1833. Insert H1119 into center hole of J1 of MC1833 and rotate H1119 a maximum of 1-1/2 additional turns ccw. Remove H1119 from MC1833 and reconnect P222 of PT1143-C1 to J1 of MC1833. Repeat the test.
8	5 OHM	CONTINUITY A	-	-	After completing tests with CONTINUITY A switch in position 6, disconnect P222 of PT1143-C1 from J1 of MC1833. Insert H1119 into center hole of J1 and rotate H1119 cw as far as it will go. Remove H1119 from MC1833 and reconnect P222 to J1.
9 thru 14	5 OHM	CONTINUITY A	7 thru 12	0.5 or less	-
15 thru 17	5 OHM	CONTINUITY A	14 thru 16	0.25 or less	-
18	5 OHM	CONTINUITY A	OFF	-	-
19	5 OHM	CONTINUITY B	1	0.8 - 1.2*	-
20 thru 26	5 OHM	CONTINUITY B	2 thru 8	0.25 or less	-
27, 28	5 OHM	CONTINUITY B	9, 10	3.5 - 5.5	If M201 reads more than 5.0, operate RANGE switch to 50 OHM position. Before operating S216 to TEST, verify that M201 reads more than 9 ma with S216 operated.
29 thru 32	5 OHM	CONTINUITY B	11 thru 14	1.9 - 2.6	-
33, 34	5 OHM	CONTINUITY B	15, 16	0.5 - 1.5	-
35	5 OHM	CONTINUITY B	17	0.5 or less	-
36	5 OHM	CONTINUITY B	OFF	-	-
37	5 OHM	CONTINUITY C	1	0.8 - 1.2*	-

(Continued on next page; see footnote at end of table)

TABLE 4-2
(Continued)

SEQUENCE	RANGE SWITCH POSITION	ROTARY SWITCH	ROTARY SWITCH POSITIONS	M201 LIMITS	FINAL PROCEDURE
38	50 OHM	CONTINUITY C	2	3.5 - 4.5 (35-45 ohms)	Check to see that RANGE switch is in 50-OHM position. Before operating S216 to TEST, verify that M201 reads 0.70 ohm or less. M1 reads more than 9 ma with S216 operated.
39	5 OHM	CONTINUITY C	-	-	Operate OPTIONS switches to FF and ME and verify that BURST HT. switch is in LO.
40 thru 50	5 OHM	CONTINUITY C	3 thru 13	0.25 or less	-
51 thru 54	5 OHM	CONTINUITY C	14 thru 17	0.5 or less	-
55	5 OHM	CONTINUITY C	OFF	-	-
56	5 OHM	CONTINUITY D	1	0.8 - 1.2*	When tests are complete with CONTINUITY D switch in position 1, operate OPTIONS switches on MC1349 to FF and ME. Operate BURST HT. switch to HI.
57	5 OHM	CONTINUITY D	2	0.25 or less	When tests are complete with CONTINUITY D switch in position 2, operate OPTIONS switches on MC1349 to DB and HI. Operate BURST HT. switch to LO.
58 thru 66	5 OHM	CONTINUITY D	3 thru 11	0.25 or less	-
67 thru 70	5 OHM	CONTINUITY D	12 thru 15	0.5 or less	-
71	5 OHM	CONTINUITY D	OFF	-	-
72	5 OHM	-	-	-	On MC1349, operate OPTIONS switches to RE and LO. Verify that BURST HT. switch is in LO. Proceed to para 4-3.3.

*If M201 reads outside limits, troubleshoot tester (paragraph 5-2.2)

4-4.1.2 Perform following check at beginning of each day that PT1143 is used to test components.

4-4.1.2.1 Operate DC PWR switch to ON. Operate and hold S2 switch to on position and S216 switch to TEST position. Meter M1 on PT1143-P1 reads 9.8 ma or more. Release S2 and S216.

4-4.1.2.2 Operate and hold S3 switch to on position and S216 to TEST. M1 reads 4.4 - 4.8 ma. Release S3 and S216 and operate DC PWR switch to OFF.

4-4.1.2.3 If M1 fails to read as specified in paragraph 4-4.1.2.1 or 4-4.1.2.2, notify the agency responsible for calibrating and maintaining the PT.

4-4.1.3 Disconnect P213 from P203 of PT1143-C1 and disconnect pin protectors from P221, P202, P204, and P205.

4-4.1.4 Verify that P211, P212, and P223 of PT1143-C1 are connected to J201, J202, and J203, respectively, on rear of PT1143-P2.

4-4.1.5 Connect P221 of PT1143-C1 to J2 of MC1853 located under access door. Connect P203, P204, and P205 of the cable to P21, P22, and J1, respectively, of MC1813 Interconnecting Box.

4-4.1.6 Connect alligator clip E206 of the cable to a MC1818 Breakaway Pulse Connector Assembly mounting screw.

4-4.1.7 Insert the H1119 into center hole of J1 of MC1853 and rotate H1119 13-1/2 to 14-1/2 turns ccw. Remove H1119 from MC1853.

4-4.1.8 Connect P202 of PT1143-C1 to J1 of MC1853.

4-4.1.9 Operate DC PWR switch to ON. On MC1349 Strike Selector Switch Pack, operate OPTIONS switches to RE and LO and BURST HT. switch to LO. These switches are located behind access door of weapon.

4-4.1.10 On PT1143, rotate TEST SELECT switch to CONTINUITY position.

4-4.2 CONTINUITY TESTS. Operate switches to each position in the sequence specified in table 4-3. After a rotary switch (CONTINUITY A, B, C, or D) is moved to each new position, verify that M201 reads 1.5 ohms or less (without operating S216 switch) and verify that M1 reads more than 9.5 ma with S216 switch in TEST position unless otherwise specified in table. Then verify that M201 reads within the limits specified in the table (with S216 switch operated) and perform any final procedures that may be specified in the table. Except when verifying that M201 reads 1.5 ohms or less as the first step after moving a rotary switch to each new position, be sure to operate S216 switch to read M201. In these procedures, ignore meter readings which are not specified.

4-4.3 ISOLATION TEST PRELIMINARY CHECK. On PT1143, rotate TEST SELECT switch to ISOLATION position. Rotate ISOLATION A switch to position 1. M1 reads 5 ma or less. Operate and hold S216 to TEST. M1 reads 4.3 - 4.9 ma. Release S216. If M1 fails to read as specified, notify the agency responsible for calibrating and maintaining the PT.

4-4.4 ISOLATION TESTS.

4-4.4.1 Rotate ISOLATION A switch to position 2. M1 reads 5 ma or less. Operate and hold S216 to TEST. M1 reads less than 1.0 ma and M2 reads more than 22.5 v. Release S216.

4-4.4.2 Repeat procedures in paragraph 4-4.4.1 with ISOLATION A switch in positions 3 through 12 in that order.

4-4.4.3 Rotate ISOLATION A switch to OFF.

4-4.4.4 Repeat procedure in paragraph 4-4.3 with ISOLATION B switch in position 1.

4-4.4.5 Repeat procedure in paragraph 4-4.4.1 with ISOLATION B switch in positions 2 through 12.

4-4.4.5A Operate OPTIONS switches to DB and ME. Repeat procedure in paragraph 4-4.4.1 with ISOLATION B switch in positions 14 through 17.

4-4.4.5B Operate OPTIONS switches to RE and LO.

4-4.4.6 Rotate ISOLATION B switch to OFF and TEST SELECT switch to CONTINUITY.

4-4.5 CONTINUITY CHECK.

4-4.5.1 Rotate CONTINUITY A switch to position 2 and operate RANGE switch to 50 OHM. M201 reads 0.70 or less. Operate and hold S216 to TEST. M1 reads more than 9 ma and M201 reads 2.2 (22 ohms) or less. If M201 reads 0.5 (5 ohms) or less, change RANGE switch to 5 OHM position for greater reading accuracy. Release S216, rotate CONTINUITY A switch to OFF, and operate DC PWR switch to OFF. Rotate TEST SELECT switch to OFF.

4-4.5.2 Disconnect all PT1143-C1 to component connections. Inspect component and PT cable connectors for bent pins and punctured inserts. Connect P213 to P203 of PT1143-C1 and install protector caps on all other loose connectors.

TABLE 4-3

SWITCH POSITIONS VERSUS METER READINGS, MC1853(WR) TESTS

SEQUENCE	RANGE SWITCH POSITION	ROTARY SWITCH	ROTARY SWITCH POSITIONS	M201 LIMITS	FINAL PROCEDURE
1	5 OHM	CONTINUITY A	1	0.8 - 1.2*	-
2	5 OHM	CONTINUITY A	17	0.5 or less	-
3	50 OHM	CONTINUITY A	2	2.2 (22 ohms) or less	Before operating S216 to TEST, verify that M201 reads 0.70 or less. M1 reads more than 9 ma with S216 operated. If M201 reads 0.5 (5 ohms) or less, change RANGE switch to 5 OHM position for greater reading accuracy.
4 thru 7	5 OHM	CONTINUITY A	3 thru 6	0.5 or less	If M201 reads more than 1 ohm with CONTINUITY A switch in position 3, 4, 5, or 6, disconnect P202 of PT1143-C1 from J1 of MC1853. Insert H1119 into center hole of J1 of MC1853 and rotate H1119 a maximum of 1-1/2 additional turns ccw. Remove H1119 from MC1853 and reconnect P202 of PT1143-C1 to J1 of MC1853. Repeat the test.
8	5 OHM	CONTINUITY A	-	-	After completing tests with CONTINUITY A switch in position 6, disconnect P202 of PT1143-C1 from J1 of MC1853. Insert H1119 into center hole of J1 and rotate H1119 cw as far as it will go. Remove H1119 from MC1853 and reconnect P202 to J1.
9 thru 14	5 OHM	CONTINUITY A	7 thru 12	0.5 or less	-
15 thru 17	5 OHM	CONTINUITY A	14 thru 16	0.25 or less	-
18	5 OHM	CONTINUITY A	OFF	-	-
19	5 OHM	CONTINUITY B	1	0.8 - 1.2*	-
20 thru 26	5 OHM	CONTINUITY B	2 thru 8	0.25 or less	-
27, 28	5 OHM	CONTINUITY B	9, 10	3.5 - 5.5	If M201 reads more than 5.0, operate RANGE switch to 50 OHM position. Before operating S216 to TEST, verify that M201 reads 0.70 ohm or less. M1 reads more than 9 ma with S216 operated.
29 thru 32	5 OHM	CONTINUITY B	11 thru 14	1.9 - 2.6	-
33, 34	5 OHM	CONTINUITY B	15, 16	0.5 - 1.5	-
35	5 OHM	CONTINUITY B	17	0.5 or less	-
36	5 OHM	CONTINUITY B	OFF	-	-
37	5 OHM	CONTINUITY C	1	0.8 - 1.2*	-

(Continued on next page; see footnote at end of table)

TABLE 4-3
(Continued)

SEQUENCE	RANGE SWITCH POSITION	ROTARY SWITCH	ROTARY SWITCH POSITIONS	M201 LIMITS	FINAL PROCEDURE
38	50 OHM	CONTINUITY C	2	3.5 - 4.5 (35-45 ohms)	Check to see that RANGE switch is in 50-OHM position. Before operating S216 to TEST, verify that M201 reads 0.70 ohm or less. M1 reads more than 9 ma with S216 operated.
39	5 OHM	CONTINUITY C	-	-	Operate OPTIONS switches to FF and ME and verify that BURST HT. switch is in LO.
40 thru 50	5 OHM	CONTINUITY C	3 thru 13	0.25 or less	-
51	5 OHM	CONTINUITY C	14	0.5 or less	-
52	5 OHM	CONTINUITY C	OFF	-	-
53	5 OHM	CONTINUITY D	1	0.8 - 1.2*	When tests are complete with CONTINUITY D switch in position 1, operate OPTIONS switches on MC1349 to FF and ME. Operate BURST HT. switch to HI.
54	5 OHM	CONTINUITY D	2	0.25 or less	When tests are complete with CONTINUITY D switch in position 2, operate OPTIONS switches on MC1349 to DB and HI. Operate BURST HT. switch to LO.
55 thru 63	5 OHM	CONTINUITY D	3 thru 11	0.25 or less	-
64, 65	5 OHM	CONTINUITY D	12, 13	0.5 or less	-
66	5 OHM	CONTINUITY D	OFF	-	-
67	5 OHM	-	-	-	On MC1349, operate OPTIONS switches to RE and LO. Verify that BURST HT. switch is in LO. Proceed to para 4-4.3.

*If M201 reads outside limits, troubleshoot tester (paragraph 5-2.2)

4-5 MC1833-TRA/1853-TRA TESTS.

4-5.1 PREPARATION FOR TESTS.

4-5.1.1 In preparation for testing MC1833-TRA units, perform procedures in paragraphs 4-3.1.1 through 4-3.1.4. In preparation for testing MC1853-TRA units, perform procedures in paragraphs 4-4.1.1 through 4-4.1.4.

4-5.1.2 Connect P221 of PT1143-C1 to J2 of MC1833 or MC1853, as applicable, located under access door. Connect P203 and P204 of the cable to P21 and P22, respectively, of MC1813 Interconnecting Box.

4-5.1.3 In preparation for testing MC1833-TRA units, connect P222 of PT1143-C1 to J1 of MC1833. In preparation for testing MC1853-TRA units, connect P202 of PT1143-C1 to J1 of MC1853.

4-5.1.4 Operate DC PWR switch to ON. On MC1349, operate OPTIONS switches to RE and HI and BURST HT. switch to HI. These switches are located behind access door of weapon.

4-5.1.5 On PT1143, rotate TEST SELECT switch to CONTINUITY.

4-5.2 CONTINUITY TESTS. Operate switches to each position in the sequence specified in table 4-4. After a rotary switch (CONTINUITY A, B, C, or D) is moved to each new position, verify that M201 reads 1.5 ohms or less (without operating S216 switch) and verify that M1 reads more than 9.5 ma with S216 switch in TEST position unless otherwise specified in table. Then verify that M201 reads within the limits specified in the table (with S216 switch operated) and perform any final procedures that may be specified in the table. Except when verifying that M201 reads 1.5 ohms or less as the first step after moving a rotary switch to each new position, be sure to operate S216 switch to read M201. In these procedures, ignore meter readings which are not specified.

TABLE 4-4

SWITCH POSITIONS VERSUS METER READINGS, MC1833-TRA/1853-TRA TESTS

SEQUENCE	RANGE SWITCH POSITION	ROTARY SWITCH	ROTARY SWITCH POSITIONS	M201 LIMITS	FINAL PROCEDURES
1	5 OHM	CONTINUITY A	1	0.8 - 1.2*	-
2	50 OHM	CONTINUITY A	2	2.2 (22 ohms) or less	Before operating S216 to TEST, verify that M201 reads 0.70 or less. M1 reads more than 9 ma with S216 operated. If M201 reads 0.5 (5 ohms) or less, change RANGE switch to 5 OHM position for greater reading accuracy.
3 thru 9	5 OHM	CONTINUITY A	7 thru 11, 14, 15	1 or less	-
10	5 OHM	CONTINUITY A	OFF	-	-
11	5 OHM	CONTINUITY B	1	0.8 - 1.2*	-
12, 13	5 OHM	CONTINUITY B	2, 17	1 or less	-
14	5 OHM	CONTINUITY B	OFF	-	-
15	5 OHM	CONTINUITY C	1	0.8 - 1.2*	-
16	50 OHM	CONTINUITY C	2	3.5 - 4.5 (35-45 ohms)	Before operating S216 to TEST, verify that M201 reads 0.70 or less. M1 reads more than 9 ma with S216 operated.
17	5 OHM	-	-	-	Operate OPTIONS switch to FF and HI.
18, 19	5 OHM	CONTINUITY C	7, 14	1 or less	-
20	5 OHM	CONTINUITY C	15	1 or less	This test applies only to MC1833 units.
21	5 OHM	CONTINUITY C	OFF	-	-
22	5 OHM	-	-	-	Operate OPTIONS switches to DB and HI.
23	5 OHM	CONTINUITY D	1	0.8 - 1.2*	-

(Continued on next page; see foc note at end of table)

SECTION 5

MAINTENANCE

This section provides those periodic inspection (preventive maintenance) procedures and those recommended corrective maintenance procedures which are to be performed as required to locate and correct troubles which cause malfunction of the test set (troubleshooting, and repair or replacement of parts).

5-1 PERIODIC INSPECTION.

5-1.1 INTERVALS. It is recommended that the test set be inspected in conjunction with and prior to calibration. Also inspect the test set when there has been abnormal handling or when any other condition causes doubt as to the operability or accuracy of the test set.

5-1.2 GENERAL PROCEDURES. Inspect for items such as the following: Bent connector pins, burned or damaged insulation or components, and faulty electrical contacts. Check indicators on meters for zero position. Ascertain that all operating controls and other accessible mechanisms are in good condition by putting them through their cycle of operation two or three times. When defects are found, repair or replace components and wiring, as applicable. Calibrate test set in accordance with procedures in Section 6, as applicable, after repairs are complete.

5-1.3 BATTERIES. Inspect batteries for general condition and expiration date (if any). Replace any battery which is damaged or outdated. Calibrate test set in accordance with procedures in Section 6 after replacing a battery.

5-2 CORRECTIVE MAINTENANCE.

5-2.1 GENERAL.

5-2.1.1 If repair is required, refer to SM 6-1 for identification of expendable materials and for recommended corrective maintenance practices. If no recommended practice is provided covering a specific problem, use standard shop practice.

5-2.1.2 For general cleaning information, refer to SM 6-1.

5-2.1.3 If it is necessary to forward PT1143 to another activity for repair, include all pertinent information regarding the malfunction.

5-2.2 TROUBLESHOOTING PROCEDURE.

5-2.2.1 When a malfunction is observed, connect the unit under test to another tester and repeat the test to isolate the trouble.

5-2.2.2 If the test set is defective, attempt to eliminate the trouble without making extensive checks or dismantling the equipment. For example, examine all battery and cable connections; or clean switch contact points by operating or rotating switch controls rapidly several times with the DC PWR switch OFF.

5-2.2.3 If these procedures do not isolate the trouble, replace the batteries in the test set. If trouble still exists, look for a defective resistor, switch, or meter. The sequence of troubleshooting is left to the discretion of the experienced technician.

5-2.3 REPLACEMENT OF PARTS.

5-2.3.1 Before replacing a part, make sure the replacement is suitable. When a defective part is identified by reference designation, refer to the Apparatus List in Section 8 for identification.

5-2.3.2 Before removing an electrical part, sketch or note the location and routing of connecting wires.

5-2.3.3 If an element of a calibrated circuit is replaced during repair, recalibrate in accordance with Section 6.

(This page intentionally left blank)

UNCLASSIFIED

[redacted]

SECTION 6

CALIBRATION

6-1 GENERAL.

6-1.1 SCOPE. This section covers the calibration criteria and procedures which are used to maintain the required degree of accuracy of measurement in the PT1143.

6-1.2 INTERVAL. The tester must have been calibrated at some time during the 2-week period preceding use.

6-1.3 INVALIDATION. Calibration is invalidated by shipment, removal from use and subsequent storage, expiration of the prescribed calibration interval, and by replacement of batteries or any component in a calibrated circuit. It is the responsibility of the using activity to request recalibration any time abnormal handling, poor records, or any other condition causes doubt as to the accuracy of the PT1143.

6-1.4 SEQUENCE. All calibration procedures (paragraphs 6-2.1 through 6-2.32) must be performed in paragraph sequence.

6-1.5 EQUIPMENT REQUIRED. For calibration of PT1143, equipment specified in table 6-1 is needed. Before connecting the equipment, examine it for signs of physical damage. If defects are found, repair the equipment and calibrate, if applicable.

6-1.6 GENERAL PROCEDURES. The procedures in this section are based on the assumption that the standard meter is on the proper range to make the measurements specified.

6-2 PROCEDURE.

6-2.1 On PT1143-P1, verify that DC PWR switch is OFF. On PT1143-P2, verify that CONTINUITY A, B, C, and D, ISOLATION A and B, and TEST SELECT switches are OFF. Operate RANGE switch to 5 OHM position.

6-2.2 Remove calibration panel covers on front of PT1143-P1 and PT1143-P2. Unlock and adjust R3, R6, R226, and R228 fully counterclockwise. Mechanically adjust M1, M2, and M201 meters.

TABLE 6-1

CALIBRATION EQUIPMENT

SPECIFICATION	SUGGESTED TYPE
Milliammeter, capable of measuring 0 - 10 ma dc with an accuracy of 0.25%*	Sensitive-Research WVA, Polyranger, or Model C, or Calibration Standards VA-100A
Voltmeter, capable of measuring 0 - 48 v dc with an accuracy of 0.25%*	Calibration Standards VA-100A, or John Fluke 601 or 803
Resistor, decade, with 1-ohm increments and capable of measuring 0 - 8,000 ohms with an accuracy of 2%*	General Radio 1432M, N, or J
Phone Plug	-

*If the equipment listed under the SUGGESTED TYPE column is not available, alternate equipment must be approved by the responsible integrated contractor's Standards Laboratory

UNCLASSIFIED

[redacted]

UNCLASSIFIED

6-2.3 Connect the standard voltmeter positive and negative terminals to E1 and E3, respectively, on PT1143-P1 calibration panel.

6-2.4 Operate DC PWR switch to ON. Standard voltmeter reads 6.0 - 6.5 v. Operate DC PWR switch to OFF.

6-2.5 Disconnect standard voltmeter from E1 and E3 and connect meter between E2 (+) and E1 (-).

6-2.6 Operate DC PWR switch to ON. Standard voltmeter reads 45 - 49 v. Operate DC PWR switch to OFF and disconnect standard voltmeter.

6-2.7 Connect a shorting cable between E3 and E4. Connect the standard milliammeter through a phone plug to J1. Operate DC PWR switch to ON.

6-2.8 On PT1143-P2, operate and hold switch S216 to TEST. Adjust R3 on PT1143-P1 calibration panel for a reading of 10 ma on M1 meter of PT1143-P1. Standard milliammeter reads 9.9 - 10.1 ma. Release S216 and disconnect milliammeter.

6-2.9 Operate and hold S216 to TEST and readjust R3 as necessary to obtain a reading of 10 ma on M1. Release S216. Lock R3 and disconnect shorting cable.

6-2.10 Connect P211 of PT1143-C1 cable to J201 on rear of PT1143-P2.

6-2.11 On decade resistor, rotate 1-k-per-step decade to position 8 and all other decades to 0. Connect decade resistor between P213-F and P213-a of PT1143-C1.

6-2.12 Rotate TEST SELECT switch to ISOLATION position and ISOLATION A switch to position 2. M1 reads less than 4 ma and M2 reads more than 17 v.

6-2.13 Operate and hold S216 to TEST. Adjust R6 on PT1143-P1 calibration panel for a reading of 4.6 ma on M1. M2 reads 18 - 21 v. Release S216. Lock R6 and rotate ISOLATION A switch to OFF.

6-2.14 Operate and hold S216 to TEST and S3 switch on PT1143-P1 to on position. M1 reads 4.5 - 4.7 ma. Release both switches and operate DC PWR switch to OFF.

6-2.15 Rotate TEST SELECT switch to CONTINUITY position. On decade resistor, rotate 1-ohm-per-step decade to position 2 and all other decades to 0.

6-2.16 Disconnect decade resistor from P213-F and P213-a and connect between P213-H and P213-K. Rotate CONTINUITY A switch to position 16.

6-2.17 Operate DC PWR switch to ON. M201 meter on PT1143-P2 reads less than 1.5 ohms.

6-2.18 Operate and hold S216 to TEST. Unlock and adjust R226 on PT1143-P2 calibration panel for a reading of 2 ohms on M201. Release S216 and lock R226. M201 reads less than 1.5 ohms.

6-2.19 On decade resistor, rotate 1-ohm-per-step decade to position 5. Operate and hold S216 to TEST. M201 reads 4.8 - 5.2 ohms.

6-2.20 Rotate 1-ohm-per-step decade to position 4. M201 reads 3.8 - 4.2 ohms.

6-2.21 Rotate 1-ohm-per-step decade to position 3. M201 reads 2.9 - 3.1 ohms.

6-2.22 Rotate 1-ohm-per-step decade to position 1. M201 reads 0.95 - 1.05 ohms.

6-2.23 Rotate 1-ohm-per-step decade to position 0. M201 reads 0.1 ohm or less. Release S216.

6-2.24 Operate RANGE switch to 50 OHM position. On decade resistor, rotate 10-ohm-per-step decade to position 3. M201 reads less than 0.7 ohm.

6-2.25 Operate and hold S216 to TEST. Unlock and adjust R228 on PT1143-P2 calibration panel for a reading of 3 ohms on M201. Release S216.

6-2.26 Rotate 10-ohm-per-step decade to position 5. M201 reads less than 0.7 ohm. Operate and hold S216 to TEST. M201 reads 4.8 - 5.2 ohms.

6-2.27 Rotate 10-ohm-per-step decade to position 4. M201 reads 3.8 - 4.2 ohms.

6-2.28 Rotate 10-ohm-per-step decade to position 2. M201 reads 1.9 - 2.1 ohms.

6-2.29 Rotate 10-ohm-per-step decade to position 1. M201 reads 0.95 - 1.05 ohms.

6-2.30 Rotate 10-ohm-per-step decade to position 0. M201 reads 0.1 ohm or less. Release S216 and operate DC PWR switch to OFF.

6-2.31 Disconnect decade resistor, rotate TEST SELECT and CONTINUITY A switches to OFF, and operate RANGE switch to 5 OHM position.

6-2.32 Install calibration panel covers on PT1143-P1 and -P2. Fill out a calibration sticker and place it next to the serial number of the tester on the front of the cabinet.

UNCLASSIFIED

SECTION 7

STORAGE AND SHIPMENT

7-1 PREPARATION FOR STORAGE.

7-1.1 Remove the batteries from the tester and place in a 200 psi fiberboard box, using sufficient cushioning material to prevent damage to batteries during storage handling.

7-1.2 Cover the PT1143-C1 connectors as follows:

CAUTION

Damage to the cable insulation may result if the tape contacts the cable.

Place a plastic bag (appropriate size) over each cable connector and secure the bag in place, using several turns of suitable pressure-sensitive tape; or, wrap each cable connector in noncorrosive paper barrier material (crepe) (if this material is not available, use flexible greaseproof barrier material (grade A, medium duty)) and gather the ends of the barrier material firmly against the cable and secure in place using several turns of a suitable pressure-sensitive adhesive tape. Coil cable to a diameter not less than 10 times the diameter of the cable. Avoid sharp kinks and angle bends. Place the cable in a 200 psi fiberboard box.

7-1.3 Make a packing list for each container and attach one internal and one external packing list for each container in accordance with procedures in SM 6-1. Use masking tape to secure the flaps of each container and store the containers with the PT.

7-2 STORAGE INSPECTION.

Inspect PT at intervals not to exceed 6 mos. Inspect in accordance with procedures in paragraphs 5-1.2 and 5-1.3.

7-3 PACKAGING FOR SHIPMENT.

7-3.1 GENERAL. Use of the procedures in this section is optional. If used, they will provide adequate protection for shipment by common carrier.

7-3.2 PACKAGING MATERIALS.

7-3.2.1 Use packaging materials as specified in this section and in SM 6-1, except that other materials may be used if the protection to the PT is not impaired. Use sufficient material to insure adequate packaging.

7-3.2.2 Refer to SM 6-1 for part number and unit of issue information of packaging materials.

7-3.3 PACKING LISTS.

7-3.3.1 The packing list may be made up in either of two ways:

a. It may list all containers and contents on one list.

b. It may list each container and its contents on a separate list.

7-3.3.2 Inventory items to be packed against the packing list.

7-3.3.3 Attach one internal and one external packing list for each package in accordance with procedures in SM 6-1.

7-3.4 PACKAGING PROCEDURES.

7-3.4.1 All workmanship shall conform to the highest packaging standards associated with this type of equipment.

7-3.4.2 Packaging procedures specified or referenced herein are shown to provide adequate protection during normal shipping and handling, and are preferred. Minor deviations may be made if the protection to the PT is not impaired.

7-3.4.3 Package PT1143-C1 in accordance with procedures in paragraph 7-1.2. Place spare parts in plastic bags or in noncorrosive barrier material (crepe), whichever is more suitable, and place in the cable container, using sufficient cushioning material to prevent damage during shipment. Secure the flaps of the box with masking tape. Place the 200-psi fiberboard box in a 400-psi fiberboard box lined with a minimum of 1 in. of bound hair wadding. Use gummed tape to secure the flaps of the outer box.

7-3.4.4 Secure all loose parts on the tester to prevent movement which may damage the part or scratch

[redacted]

surfaces during shipment. Use pressure-sensitive tape to secure doors, latches, and handles, as required. Place the tester in an upright position in an open front wood box lined with a minimum of 2 in. of bound hair wadding. Secure the box for shipment with 5/8-in. wide flat steel strapping.

7-3.5 SHIPPING CONTAINER MARKING. Add markings to the exterior of each container in accordance with procedures in SM 6-1 and the following paragraphs.

7-3.5.1 Nomenclature: PT1143.

7-3.5.2 Part No.: (6-digit number on identification plate)

7-3.5.3 Omit QUANTITY heading and information.

7-3.5.4 On the line above name and address or receiving agency, add SHIP TO:.

7-3.5.5 In upper right corner of side and top of container, add FROM: and name and address of shipping agency.

7-3.5.6 Add UP arrows and KEEP DRY markings.

7-3.5.7 Add DELICATE INSTRUMENT - HANDLE WITH CARE.

7-3.5.8 Stencil PACKING LIST INSIDE on the container.

[redacted]

SECTION 8

SCHEMATICS

8-1 APPARATUS LIST.

Table 8-1 provides description and identification of components of PT1143 with reference designators. The table lists all components which are identified by a reference designator. It is emphasized that although various commercial manufacturers' identifications are provided, they are furnished primarily as guides. Any item which is the equivalent of the commercial part listed may be substituted, the only criteria being that the item shall perform the required function acceptably and meet all physical requirements such as size. Unless otherwise specified, all resistors are ±5 percent and/or 1 w fixed composition type. Type RC resistors conform to military specification MIL-R-11 and type RN resistors conform to MIL-R-10509. Parts marked with a † are spare parts supplied with the test set.

8-2 SCHEMATIC DIAGRAMS.

The schematics and tables described below are provided as aids in systematic troubleshooting of the equipment in the event of malfunction.

8-2.1 A schematic of the PT1143 power supply (PT1143-P1) is shown in figure 8-1.

8-2.2 A schematic of the PT1143 continuity test circuit (part of PT1143-P2), issue K of schematic drawing No. CK176748, is shown in figure 8-2. Terminals of TB201 are connected to corresponding terminals of TB1 (figure 8-1).

8-2.3 A schematic of the PT1143 continuity test circuit (part of PT1143-P2), issue G of schematic drawing No. CK176748, is shown in figure 8-3. Terminals of TB201 are connected to corresponding terminals of TB1 (figure 8-1). Table 8-2 lists the selector switch position versus continuity loop termination for P/N 176748-002 test sets.

8-2.4 A schematic of the PT1143 isolation test circuit (part of PT1143-P2), issue K of schematic drawing No. CK176748, is shown in figure 8-4. Terminals of TB201 are connected to corresponding terminals of TB1 (figure 8-1). TEST SELECT switch is shown in OFF position.

8-2.5 A schematic of the PT1143 isolation test circuit (part of PT1143-P2), issue G of schematic drawing No. CK176748, is shown in figure 8-5. Terminals of TB201 are connected to corresponding terminals of TB1 (figure 8-1). TEST SELECT switch is shown in OFF position. Table 8-3 shows the PT1143-C1 point-to-point wiring for all connector terminals in the cable.

TABLE 8-1
APPARATUS LIST

REF DESIGN.	PART DESCRIPTION	MANUFACTURER'S IDENTIFICATION
BT1	Battery, 6 v	Burgess, F4BP
BT2	Battery, 45 v	Burgess, Z30NX
E1, E2	Binding Post, 5-way, red (PT1143-P1)	Superior Electric, DF30RC
E1, E2	Terminal Stud (PT1143-P2)	Winchester, 773
E3, E4	Binding Post, 5-way, black	Superior Electric, DF30BC
†E206	Clip, alligator	Mueller, 60HS

(Continued on next page; see footnotes at end of table)

UNCLASSIFIED

TABLE 8-1
(Continued)

REF DESIGN.	PART DESCRIPTION	MANUFACTURER'S IDENTIFICATION
F1, F2	Fuse, 1/32 amp	Littelfuse, AGX
J1	Jack, phone, midget, closed circuit (PT1143-P1)	Mallory, A-2A
J1	Jack, tip, nylon, red (PT1143-P2)	E.F. Johnson, 105802
J2	Jack, tip, nylon, red (PT1143-P1)	E.F. Johnson, 105802
J201, J203	Connector, receptacle	Winchester Electronics, MRAC-75S-J6 with 75 No. 100-1018S removable contacts (†), No. XMRE75-2A000 shell, and No. XMRE75-0010 mounting plate
J202	Connector, receptacle	Same as J201 except shell is No. XMRE75-2B000
M1	Meter, 0 - 10 ma scale, accuracy 1%	Weston, 741
M2	Meter, 0 - 50 v dc scale, 50 ua movement, accuracy 1%	Weston, 741
M201	Meter, 0 - 5 scale, 100 ua dc movement, accuracy 1%, 300-ohm internal resistance	Weston, 741
P211, P223	Connector, plug	Winchester Electronics, MRAC-75P-JTC6-H with 75 No. 100-1018P removable contacts (†), and No. XMRE75-1A000 shell
P212	Connector, plug	Same as P211 except shell is No. XMRE75-1B000
P201	Connector, plug	Bendix, PT06P-10-98P
P202	Connector, plug, SA812	Sandia Corp, Dwg No. 352956
P203	Connector, plug	Bendix, PT01P-18-30S
P204	Connector, plug	Bendix, PT01P-18-32S
P205	Connector, plug	Bendix, PT06P-16-26P
P213	Connector, plug	Bendix PT06A-18-30P
P221	Connector, plug	Bendix, PT06A-18-11P
P222	Connector, plug, SA1322	Sandia Corp, Dwg No. 356654
R1, R2	Resistor, 240 ohms, Type RC32GF241J	-

(Continued on next page)

UNCLASSIFIED

[redacted]

AF195421

TABLE 8-1
(Continued)

REF DESIGN.	PART DESCRIPTION	MANUFACTURER'S IDENTIFICATION
†R3	Resistor, variable, 200 ohms, 2 w	International Resistor, WP200
R4, R5	Resistor, 820 ohms, Type RC32GF821J	-
R6	Resistor, variable, 2 k, 2 w	Allen Bradley, Type J
R7, R8	Resistor, fixed, film, 4 k ±1%, 1 w	Dale Products, DC-1
R9, R10	Resistor, fixed, film, 1 meg ±1%, 1/2 w, Type RN70B1004F	-
R11	Resistor, fixed, film, 1 k ±1%, 1/2 w, Type RN75B1001F	-
R201, R223	Resistor, 9.1 k, Type RC32GF912J	-
†R202 thru R222	Resistor, 510 ohms, Type RC32GF511J	-
R224	Resistor, fixed, film, 1 ohm ±1%, 1 w	Dale Products, DC-1
R225	Resistor, 150 ohms, Type RC32GF151J	-
R226	Resistor, variable, linear, 100 ohms, 2 w	Allen Bradley, Type J
R227	Resistor, 3 k ±5%, 1/2 w, Type RC20GF302J	-
†R228	Resistor, variable, linear, 2.5 k, 2 w	Allen Bradley, Type J
R229, R230	Resistor, fixed, film, 2 ohms ±1%, 1 w	Dale Products, DC-1
R231	Resistor, 330 ohms ±5%, 1/2 w, Type RC20GF330J	-
R232	Resistor, 510 ohms ±5%, 1/2 w, Type RC33GF511J	-
R233 thru R243*	Resistor, 510 ohms ±5%, 1/2 w, Type RC33GF511J	-
S208 ***	Switch, rotary, with 11 JVN-9 sections and 1 LG index JV-7	Centralab
†S209, S210	Switch, rotary, with 2 JVN-8 sections, 1 JVN-18 section, and 1 JV-7 index	Centralab
S211 thru S214	Switch, rotary, with 4 JVN-8 sections and 1 JV-7 index	Centralab
S1	Switch, toggle, JAN ST50K	-
S2, S3	Switch, toggle, JAN ST40C	-
S215	Switch, toggle, JAN ST50N	-

(Continued on next page; see footnotes at end of table)

TABLE 8-1
(Continued)

REF DESIGN.	PART DESCRIPTION	MANUFACTURER'S IDENTIFICATION
S216	Switch, toggle, JAN ST50L	-
S217**	Switch, toggle, MS25068-23	-
TB1, TB201	Terminal Board, 6 terminal	Cinch-Jones, 6-141-Y
XK1, XK2	Tube Socket, miniature, 9 pin	Cinch-Jones, 121-19-12-034

† Spare part supplied with test set

* Added to tester modified to issue G of schematic Dwg No. CK176748

** On modified testers, S217 is a 8-pdt Micro Switch Type 22AT2-T

*** On testers prior to issue H of schematic Dwg No. CK176748, S208 switch has 8 sections

UNCLASSIFIED

NOTES

1. UNLESS OTHERWISE SPECIFIED, RESISTANCE VALUES ARE IN OHMS.
2. UNDERLINED DESIGNATIONS INDICATE FRONT PANEL MARKINGS.
3. OVERLINED DESIGNATIONS INDICATE CALIBRATION CHASSIS MARKINGS.
4. ⊘ INDICATES A SCREW DRIVER CONTROL.
5. DOUBLE OVERLINED DESIGNATIONS INDICATE REAR CHASSIS MARKINGS.

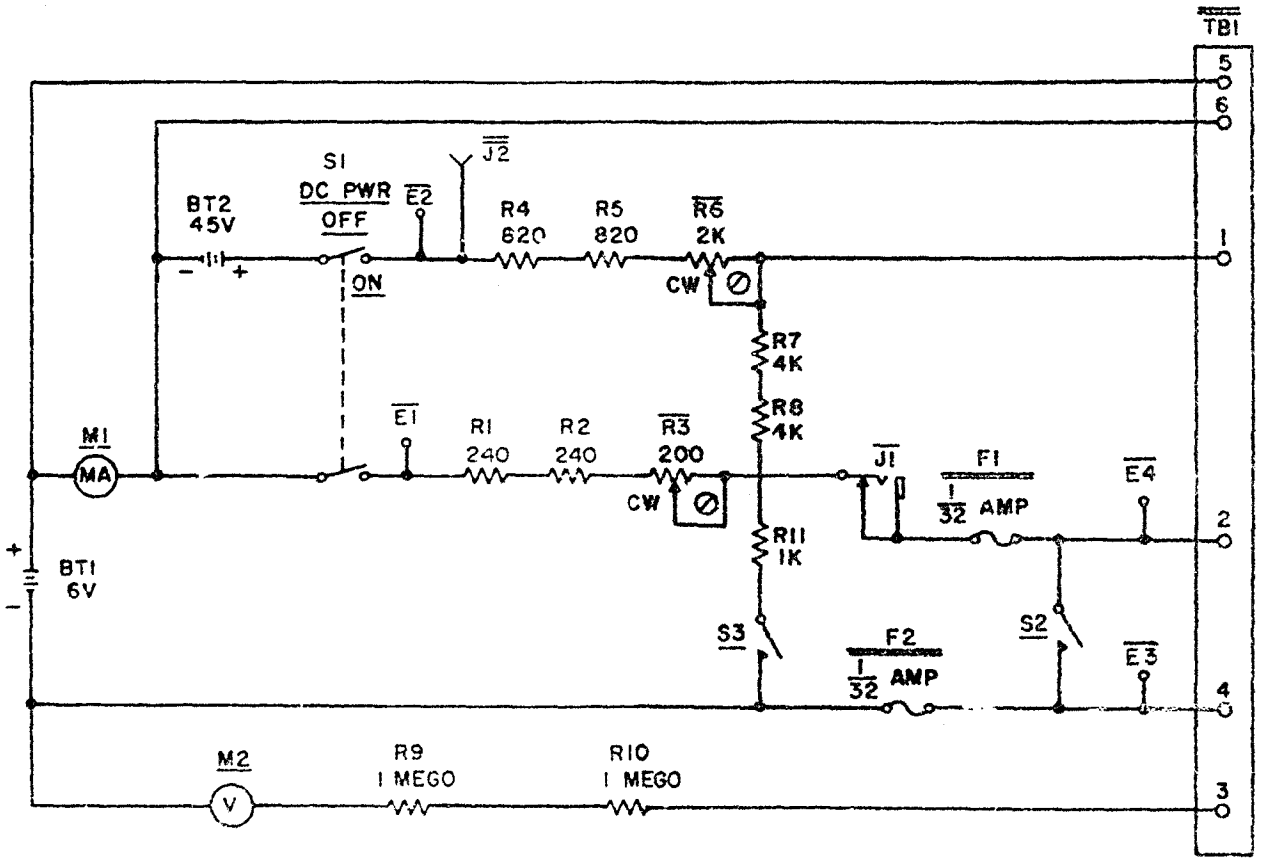

Figure 8-1 Schematic of PT1143 Power Supply (PT1143-P1)

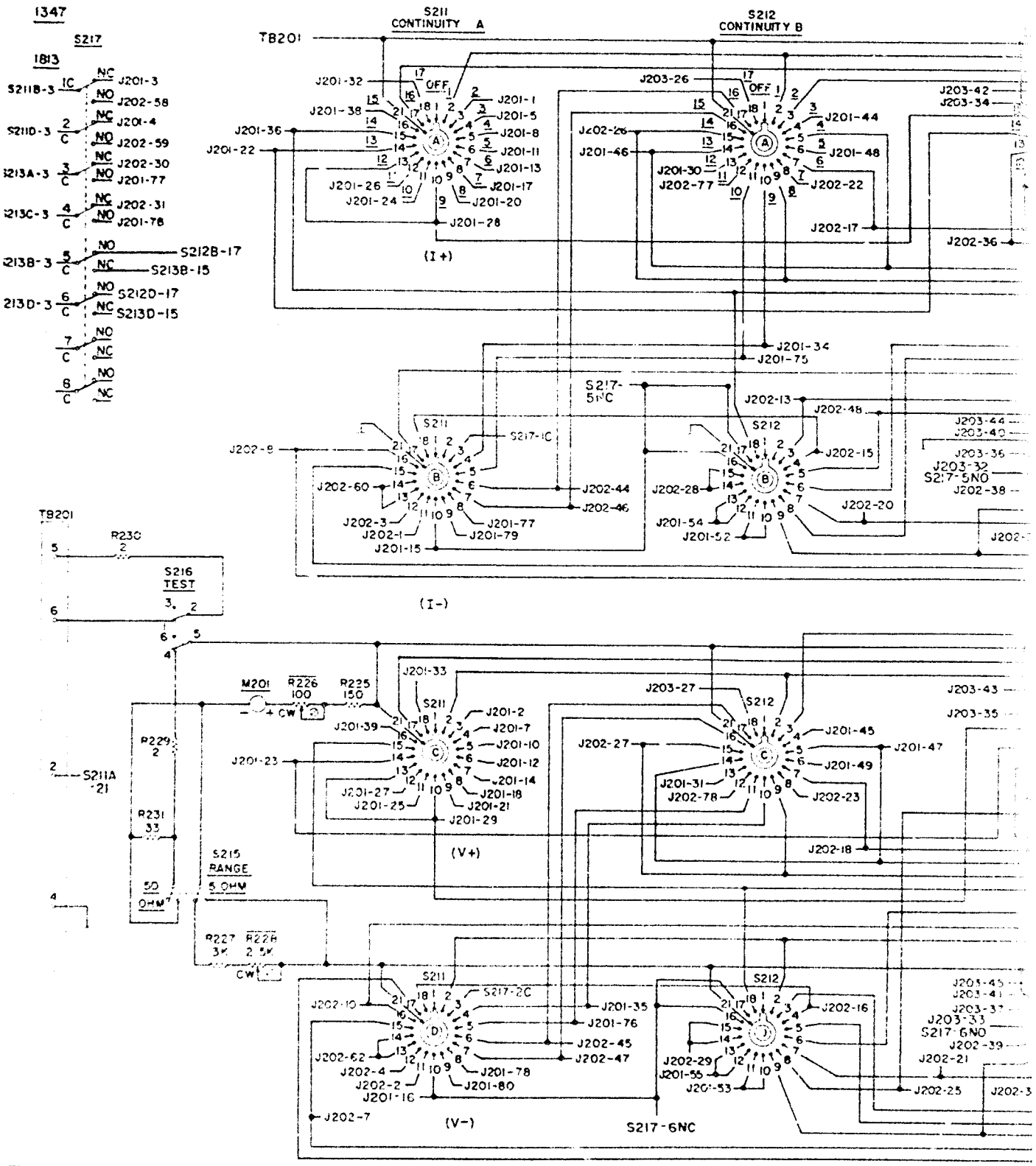

Figure 8-2 Schematic of PT1143 Continuity Test Circuit (Part of PT1143-P2), Issue K of Schematic Dwg No. CK176748

UNCLASSIFIED

[redacted]

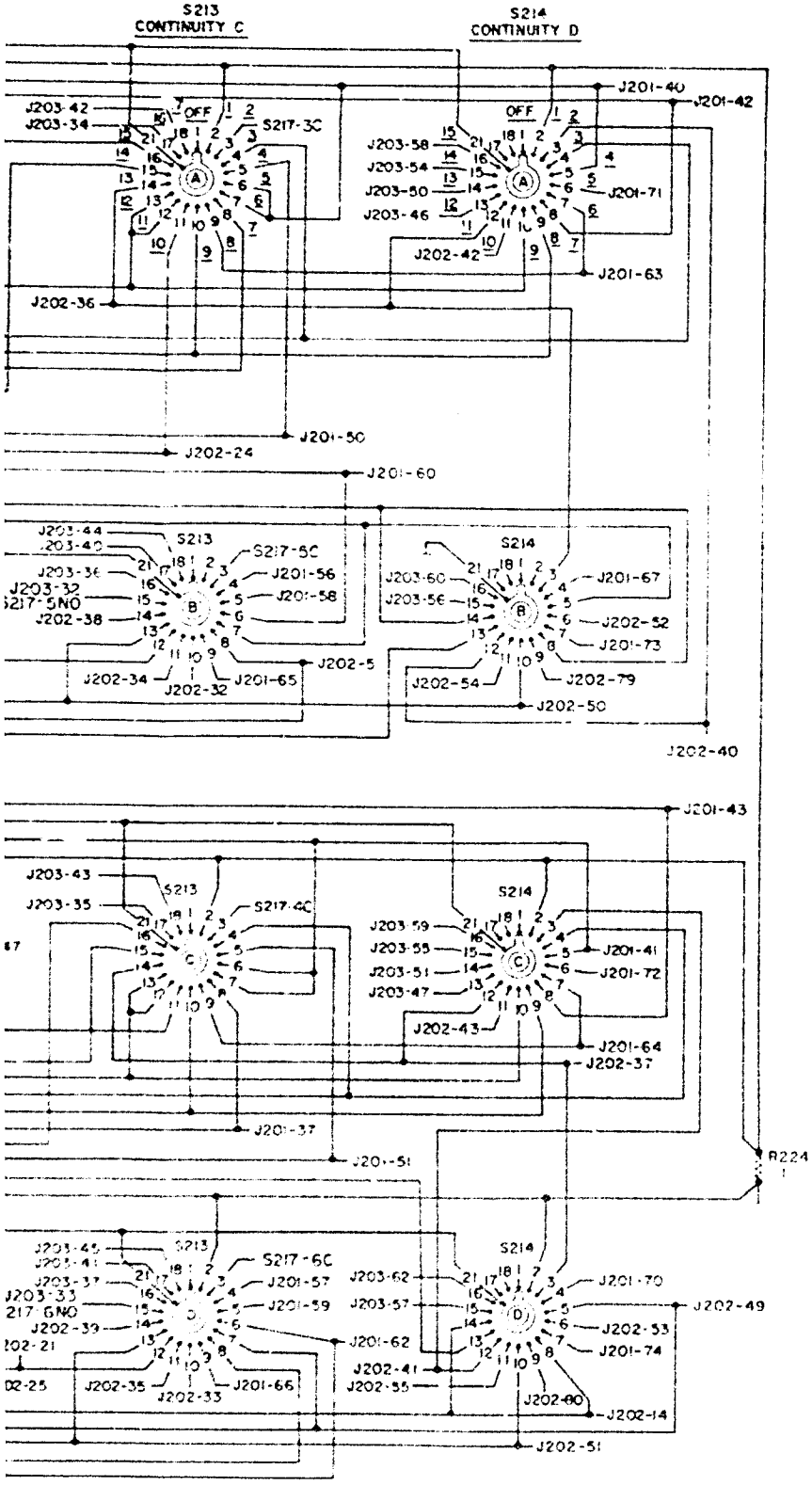

NOTES

1. LEADS SO INDICATED SHALL BE INDIVIDUAL WIRES CONNECTED DIRECTLY TO COMPONENT SHOWN.
2. RESISTANCE VALUES ARE IN OHMS UNLESS OTHERWISE SPECIFIED.
3. UNDERLINED DESIGNATIONS INDICATE FRONT PANEL AND CONNECTOR MARKINGS. OVERLINED MARKINGS INDICATE CALIBRATION CHASSIS MARKINGS.
4. ⊘ INDICATES SCREWDRIVER CONTROL.

J202

S211B-11 — 1
S211D-11 — 2
S211B-12 — 3
S211D-12 — 4
S213B-8 — 5
S211D-15 — 7
S211B-16 — 8
S211D-16 — 10
S212B-3 — 13
S214D-8 — 14
S212B-4 — 15
S212D-4 — 16
S212A-7 — 17
S212C-7 — 18
S212B-7 — 20
S213D-12 — 21
S212A-8 — 22
S212C-8 — 23
S213A-11 — 24
S212D-8 — 25
S212A-15 — 26
S212C-15 — 27
S212B-14 — 28
S212D-14 — 29
S217-3NC — 30
S217-4NC — 31
S213B-10 — 32
S213D-10 — 33
S213B-11 — 34
S213D-11 — 35
S213A-14 — 36
S214D-3 — 37
S213B-14 — 38
S213D-14 — 39
S214B-12 — 40
S214D-12 — 41
S214A-11 — 42
S214C-11 — 43
S211B-6 — 44
S211D-6 — 45
S211B-7 — 46
S211D-7 — 47
S212B-5 — 48
S214D-5 — 49
S214B-10 — 50
S214D-10 — 51
S214B-6 — 52
S214D-6 — 53
S214B-11 — 54
S214D-11 — 55
S211B-14 — 60
S211D-13 — 62
S212A-12 — 77
S212C-12 — 78
S214B-9 — 79
S214D-9 — 80
S217-2NO — 59
S217-1NO — 58

J201

J203-11, S211A-6 — 11
J203-3, S211A-3 — 1
J203-4, S211C-3 — 2
S217-1NC — 3
S217-2NC — 4
J203-5, S211A-4 — 5
J203-7, S211C-4 — 7
J203-8, S211A-5 — 8
J203-10, S211C-5 — 10
J203-12, S211C-6 — 12
J203-13, S211A-7 — 13
J203-14, S211C-7 — 14
S211B-10 — 15
S211D-10 — 16
J203-15, S211A-8 — 17
J203-16, S211C-8 — 18
J203-17, S211A-9 — 20
J203-18, S211C-9 — 21
J203-30, S211A-14 — 22
J203-31, S211C-14 — 23
J203-22, S211A-11 — 24
J203-23, S211C-11 — 25
J203-24, S211A-12 — 26
J203-25, S211C-12 — 27
J203-20, S213A-16 — 28
J203-21, S211C-10 — 29
S212A-13 — 30
S212C-13 — 31
S212A-10 — 34
S211D-4 — 35
S211A-15 — 36
S213C-8 — 37
S211A-16 — 38
S211C-16 — 39
S214A-5 — 40
S214C-5 — 41
S214A-8 — 42
S214C-8 — 43
S212A-4 — 44
S212C-4 — 45
S212A-14 — 46
S212C-5 — 47
S212A-6 — 48
S212C-6 — 49
S213A-5 — 50
S213C-5 — 51
S212B-11 — 52
S212D-11 — 53
S212B-12 — 54
S212D-12 — 55
S213B-4 — 56
S213D-4 — 57
S213B-5 — 58
S213D-5 — 59
S213B-6 — 60
S213D-6 — 62
S214A-7 — 63
S214C-7 — 64
S213B-9 — 65
S213D-9 — 66
S214B-4 — 67
S214D-4 — 70
S214A-6 — 71
S214C-6 — 72
S214B-7 — 73
S214D-7 — 74
S212A-11 — 75
S211D-5 — 76
S217-3NO, S211B-8 — 77
S217-4NO, S211D-8 — 78
S211B-9 — 79
S211D-9 — 80
J203-1, S211A-18 — 32
J203-2, S211C-18 — 33

J203

J201-32 — 1
J201-33 — 2
J201-1 — 3
J201-2 — 4
J201-5 — 5
J201-7 — 7
J201-8 — 8
J201-10 — 10
J201-11 — 11
J201-12 — 12
J201-13 — 13
J201-14 — 14
J201-17 — 15
J201-18 — 16
J201-20 — 17
J201-21 — 18
J201-28 — 20
J201-29 — 21
J201-24 — 22
J201-25 — 23
J201-26 — 24
J201-27 — 25
S212A-18 — 26, 28
S212C-18 — 27, 29
J201-22 — 30
J201-23 — 31
S213B-15 — 32
S213D-15 — 33
S213A-17 — 34
S213C-17 — 35
S213B-16 — 36
S213D-16 — 37
S213B-17 — 40
S213D-17 — 41
S213A-18 — 42
S213C-18 — 43
S213B-18 — 44
S213D-18 — 45
S214A-13 — 46, 48
S214C-13 — 47, 49
S214A-14 — 50, 52
S214C-14 — 51, 53
S214A-15 — 54
S214C-15 — 55
S214B-15 — 56
S214D-15 — 57
S214A-16 — 58
S214C-16 — 59
S214B-16 — 60
S214D-16 — 62

[redacted]

AF195421

[redacted]

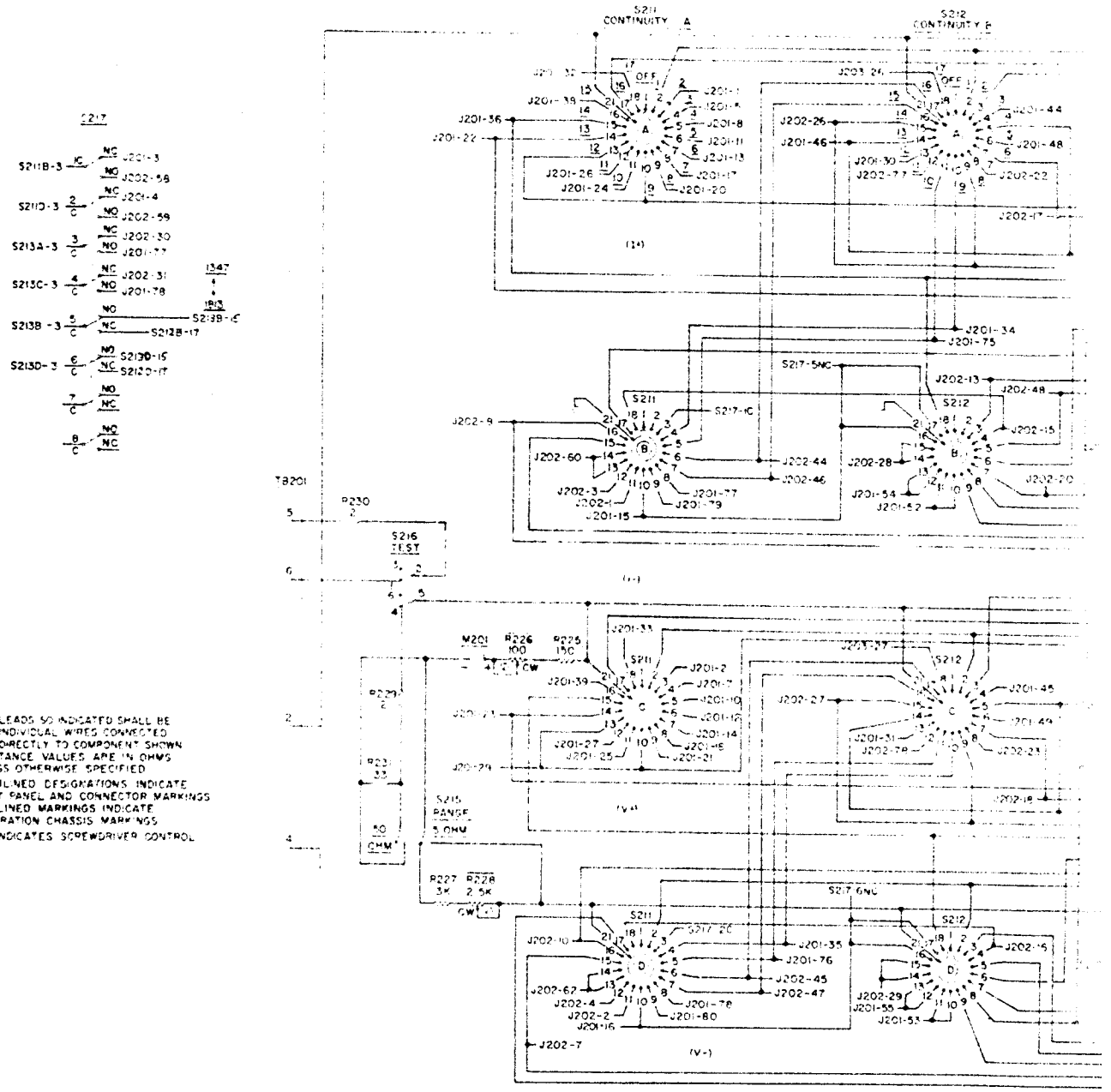

NOTES

1. LEADS SO INDICATED SHALL BE INDIVIDUAL WIRES CONNECTED DIRECTLY TO COMPONENT SHOWN
2. RESISTANCE VALUES ARE IN OHMS UNLESS OTHERWISE SPECIFIED
3. UNDERLINED DESIGNATIONS INDICATE FRONT PANEL AND CONNECTOR MARKINGS OVERLINED MARKINGS INDICATE CALIBRATION CHASSIS MARKINGS
4. ⊥ INDICATES SCREWDRIVER CONTROL

AFI95421

[redacted]

UNCLASSIFIED

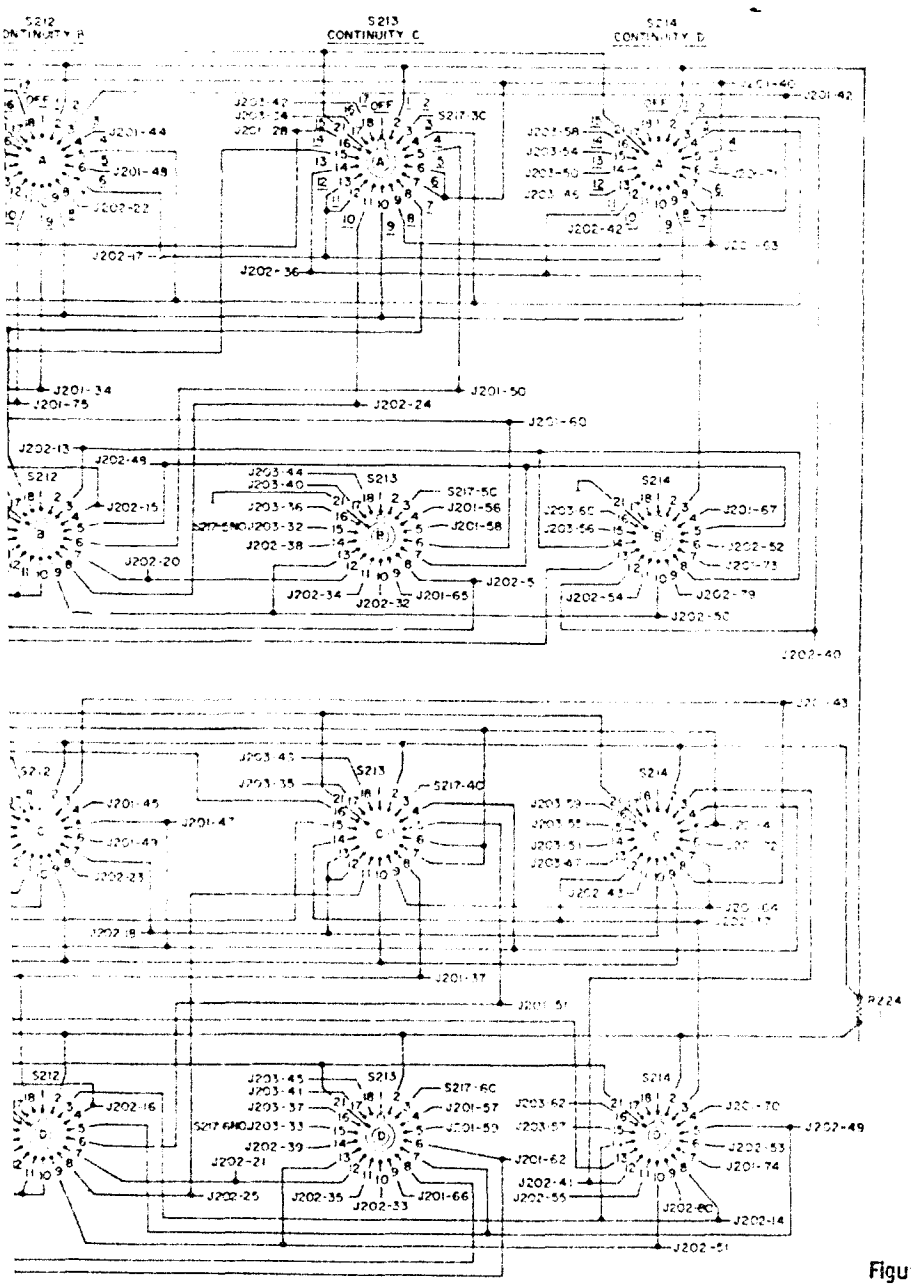

J202

S211B-7 — 1
S211C-11 — 2
S211B-12 — 3
S211D-12 — 4
S211B-8 — 5
S211D-15 — 7
S211B-16 — 8
S211D-6 — 10
S212B-3 — 13
S212C-9 — 14
S212B-4 — 15
S212C-4 — 16
S212A-7 — 17
S212C-7 — 18
S212B-7 — 19
S213D-12 — 20
S212A-8 — 22
S212C-8 — 23
S213A-11 — 24
S212D-8 — 25
S212A-15 — 26
S212C-15 — 27
S212B-14 — 28
S212D-14 — 29
S217-3NC — 30
S217-4NC — 31
S213B-10 — 32
S213C-10 — 33
S213B-11 — 34
S213D-11 — 35
S213A-14 — 36
S214D-3 — 37
S213B-14 — 38
S213D-14 — 39
S214B-12 — 40
S214D-12 — 41
S214A-11 — 42
S214C-11 — 43
S211B-6 — 44
S211D-6 — 45
S211B-7 — 46
S211D-7 — 47
S212B-5 — 48
S214D-5 — 49
S214B-10 — 50
S214D-10 — 51
S214B-6 — 52
S214D-6 — 53
S214B-11 — 54
S214D-11 — 55
S214B-3 — 60
S211D-13 — 62
S212A-12 — 77
S212C-12 — 78
S214B-9 — 79
S214D-9 — 80
S217-2NO — 59
S217-1NC — 58

J201

J203-1, S211A-6 — 11
J203-3, S211A-3 — 1
J203-4, S211C-3 — 2
S217-1NC — 3
S217-2NC — 4
J203-5, S211A-4 — 5
J203-7, S211C-4 — 7
J203-8, S211A-5 — 8
J203-10, S211C-5 — 10
J203-12, S211C-6 — 12
J203-13, S211A-7 — 13
J203-14, S211C-7 — 14
S211B-10 — 15
S211D-10 — 16
J203-15, S211A-8 — 17
J203-16, S211C-8 — 18
J203-17, S211A-9 — 20
J203-18, S211C-9 — 21
J203-30, S211A-14 — 22
J203-31, S211C-14 — 23
J203-22, S211A-11 — 24
J203-23, S211C-11 — 25
J203-24, S211A-12 — 26
J203-25, S211C-12 — 27
J203-20, S213A-16 — 28
J203-21, S211C-10 — 29
S212A-13 — 30
S212C-13 — 31
S212A-10 — 34
S211D-4 — 35
S211A-15 — 36
S213C-8 — 37
S211A-16 — 38
S214A-5 — 40
S214C-5 — 41
S214A-8 — 42
S214C-8 — 43
S212A-4 — 44
S212C-4 — 45
S212A-14 — 46
S212C-5 — 47
S212A-6 — 48
S212C-6 — 49
S213A-5 — 50
S213C-5 — 51
S212B-11 — 52
S212D-11 — 53
S212B-12 — 54
S212D-12 — 55
S217B-4 — 56
S213C-4 — 57
S213B-5 — 58
S213D-5 — 59
S213B-6 — 60
S213D-6 — 62
S214A-7 — 63
S214C-7 — 64
S213B-9 — 65
S213D-9 — 66
S214B-4 — 67
S214D-4 — 70
S214A-6 — 71
S214C-6 — 72
S214B-7 — 73
S214D-7 — 74
S212A-11 — 75
S211D-5 — 76
S217-3NO, S211B-8 — 77
S217-4NO, S211D-8 — 78
S211B-9 — 79
S211D-9 — 80
J203-1, S211A-18 — 32
J203-2, S211C-18 — 33

J201

J201-32 —
J201-33 —
J201-1 — 1
J201-2 — 4
J201-5 — 5
J201-7 — 7
J201-8 — 8
J201-10 — 9
J201-11 — 11
J201-12 — 12
J201-13 — 13
J201-14 — 14
J201-17 — 15
J201-18 — 16
J201-20 — 17
J201-21 — 18
J201-28 — 20
J201-29 — 21
J201-24 — 22
J201-25 — 23
J201-26 — 24
J201-27 — 25
S212A-18 — 26
— 28
S212C-18 — 27
— 29
J201-22 — 30
J201-23 — 31
S213B-15 — 32
S213D-15 — 33
S213A-17 — 34
S213C-17 — 35
S213B-16 — 36
S213D-16 — 37
S213B-17 — 40
S213D-17 — 41
S213A-18 — 42
S213C-18 — 43
S213B-18 — 44
S213D-18 — 45
S214A-13 — 46
— 48
S214C-13 — 47
— 49
S214A-14 — 52
— 54
S214C-14 — 53
— 55
S214A-15 — 54
S214C-15 — 55
S214B-15 — 56
S214D-15 — 57
S214A-16 — 58
S214C-16 — 59
S214B-16 — 60
S214D-16 — 62

Figure 8-3 Schematic of PT1143 Continuity Test Circuit (Part of PT1143-P2) Issue G of Schematic Dwg No. CK176748

UNCLASSIFIED

UNCLASSIFIED

TABLE 8-2

SWITCH POSITION VERSUS CONTINUITY LOOP TERMINATIONS

SWITCH POSITION	CONTINUITY LOOP TERMINATIONS (+) (-)
CONTINUITY A-2	J201-1, -2 and J201-3, -4
	J203-3, -4 and J202-58, -59
A-3	J201-5, -7 and J201-34, -35
	J203-5, -7 and J201-34, -35
A-4	J201-8, -10 and J201-75, -76
	J203-8, -10 and J201-75, -76
A-5	J201-11, -12 and J202-44, -45
	J203-11, -12 and J202-44, -45
A-6	J201-13, -14 and J202-46, -47
	J203-13, -14 and J202-46, -47
A-7	J201-17, -18 and J201-77, -78
	J203-15, -16 and J201-77, -78
A-8	J201-20, -21 and J201-79, -80
	J203-17, -18 and J201-79, -80
A-9	J201-28, -29 and J201-15, -16
	J203-20, -21 and J201-15, -16
A-10	J201-24, -25 and J202-1, -2
	J203-22, -23 and J202-1, -2
A-11	J201-26, -27 and J202-3, -4
	J203-24, -25 and J202-3, -4
A-12	J201-28, -29 and J202-60, -62
	J203-20, -21 and J202-60, -62
A-13	J201-22, -23 and J202-60, -62
	J203-30, -31 and J202-60, -62
A-14	J201-36, -37 and J202-5, -7
A-15	J201-38, -39 and J202-8, -10
A-16	J201-40, -41 and J201-60, -62
A-17	J201-32, -33 and J202-15, -16
	J203-1, -2 and J202-15, -16
CONTINUITY B-2	J201-42, -43 and J202-13, -14
B-3	J201-44, -45 and J202-15, -16
B-4	J201-46, -47 and J202-48, -49
B-5	J201-48, -49 and J201-50, -51
B-6	J202-17, -18 and J202-20, -21
B-7	J202-22, -23 and J202-24, -25
B-8	J202-26, -27 and J202-50, -51
B-9	J201-34, -35 and J201-52, -53
B-10	J201-75, -76 and J201-52, -53
B-11	J202-77, -78 and J201-54, -55
B-12	J201-30, -31 and J201-54, -55

SWITCH POSITION	CONTINUITY LOOP TERMINATIONS (+) (-)
CONTINUITY B-13	J201-46, -47 and J202-28, -29
B-14	J202-26, -27 and J202-28, -29
B-15	J202-46, -47 and J201-15, -16
B-16	J202-44, -45 and J201-15, -16
B-17	J203-26, -27 and J201-36, -37
	J203-28, -29 and J201-36, -37
CONTINUITY C-2	J202-30, -31 and J201-15, -16
	J201-77, -78 and J203-32, -33
C-3	J201-46, -47 and J201-56, -57
C-4	J201-50, -51 and J201-58, -59
C-5	[illegible], -41 and J201-60-62
C-6	J201-40, -41 and J202-48, -49
C-7	J201-36, -37 and J202-5, -7
C-8	J201-63, -64 and J201-65, -66
C-9	J202-26, -27 and J202-32, -33
C-10	J202-24, -25 and J202-34, -35
C-11	J202-17, -18 and J202-20, -21
C-12	J202-17, -18 and J202-50, -51
C-13	J202-36, -37 and J202-38, -39
C-14	J201-22, -23 and J203-[illegible]
	J201-22, -23 and J203-[illegible]
C-15	J203-20, -21 and J203-36, -37
C-16	J203-34, -35 and J203-40, -41
C-17	J203-42, -43 and J203-44, -45
D-2	J202-40, -41 and J202-36, -37
D-3	J201-46, -47 and J201-67, -70
D-4	J201-40, -41 and J202-48, -49
D-5	J201-71, -72 and J202-52, -53
D-6	J201-63, -64 and J201-75, -74
D-7	J201-42, -43 and J202-13, -14
D-8	J202-26, -27 and J202-79, -80
D-9	J202-17, -18 and J202-50, -51
D-10	J202-42, -43 and J202-54, -55
D-11	J202-36, -37 and J202-40, -41
D-12	J203-46, -47 and J202-8, -10
	J203-48, -49 and J202-8, -10
D-13	J203-50, -51 and J202-13, -14
	J203-52, -53 and J202-13, -14
D-14	J203-54, -55 and J203-56, -57
D-15	J203-58, -59 and J203-60, -62

UNCLASSIFIED

TABLE 8-3

PT1143-C1 POINT-TO-POINT WIRING

TERMINAL	CONNECTS TO TERMINAL	TERMINAL	CONNECTS TO TERMINAL	TERMINAL	CONNECTS TO TERMINAL
P211-1, -2	P201-B	P211-79, -80	P204-W	P212-71	P205-X
P211-3, -4	P201-C	P212-1, -2	P204-V	P212-72	P205-N
P211-5, -7	P202-J	P212-3, -4	P204-g	P212-73	P205-c
P211-8, -10	P202-A	P212-5, -7	P204-D	P212-74	P205-P
P211-11, -12	P202-C	P212-8, -10	P204-A	P212-75	P205-W
P211-13, -14	P202-E	P212-13, -14	P204-C	P212-77, -78	P205-H
P211-15, -16	P204-B	P212-15, -16	P204-G	P212-79, -80	P204-b
P211-17, -18	P202-L	P212-17, -18	P204-H	P223-1, -2	P222-G
P211-20, -21	P202-K	P212-20, -21	P204-K	P223-3, -4	P221-J
P211-22, -23	P202-F	P212-22, -23	P204-d	P223-5, -7	P222-A
P211-24, -25	P202-P	P212-24, -25	P204-e	P223-8, -10	P222-N
P211-26, -27	P202-M	P212-26, -27	P204-a	P223-11, -12	P222-D
P211-28, -29	P202-H	P212-28, -29	P204-E	P223-13, -14	P222-K
P211-30, -31	P205-G	P212-30, -31	P204-j	P223-15, -16	P222-E
P211-32, -33	P202-G	P212-32, -33	P204-Z	P223-17, -18	P222-J
P211-34, -35	P203-F	P212-34, -35	P204-c	P223-20, -21	P222-H
P211-36, -37	P203-D	P212-36, -37	P204-S	P223-22, -23	P222-X
P211-38, -39	P203-A	P212-38, -39	P204-T	P223-24, -25	P222-M
P211-40, -41	P203-H	P212-40, -41	P204-U	P223-26, -27	P202-N
P211-42, -43	P203-C	P212-42, -43	P204-R	P223-28, -29	P222-C
P211-44, -45	P203-G	P212-44, -45	P205-C	P223-30, -31	P222-F
P211-46, -47	P203-a	P212-46, -47	P205-D	P223-32, -33	P204-Y
P211-48, -49	P203-d	P212-48, -49	P205-V	P223-34, -35	P222-P
P211-50, -51	P203-e	P212-50, -51	P205-U	P223-36, -37	P204-J
P211-52, -53	P203-B	P212-52, -53	P205-M	P223-38, -39	P222-R
P211-54, -55	P203-E	P212-54, -55	P205-R	P223-40, -41	P203-L
P211-56, -57	P203-Z	P212-56	P203-P	P223-42, -43	P222-S
P211-58, -59	P203-c	P212-57	P204-P	P223-44, -45	P203-J
P211-60, -62	P203-K	P212-58, -59	P204-f	P223-46, -47	P202-D
P211-63, -64	P203-S	P212-60, -62	E206	P223-48, -49	P222-L
P211-65, -66	P203-T	P212-63	P203-X	P223-50, -51	P202-B
P211-67, -70	P203-b	P212-64	P203-N	P223-52, -53	P222-B
P211-71, -72	P203-R	P212-65	P203-M	P223-54, -55	P222-T
P211-73, -74	P203-U	P212-66	P204-N	P223-56, -57	P203-W
P211-75, -76	P204-F	P212-67	P204-M	P223-58, -59	P222-U
P211-77, -78	P204-h	P212-70	P204-X	P223-60, -62	P204-L

UNCLASSIFIED

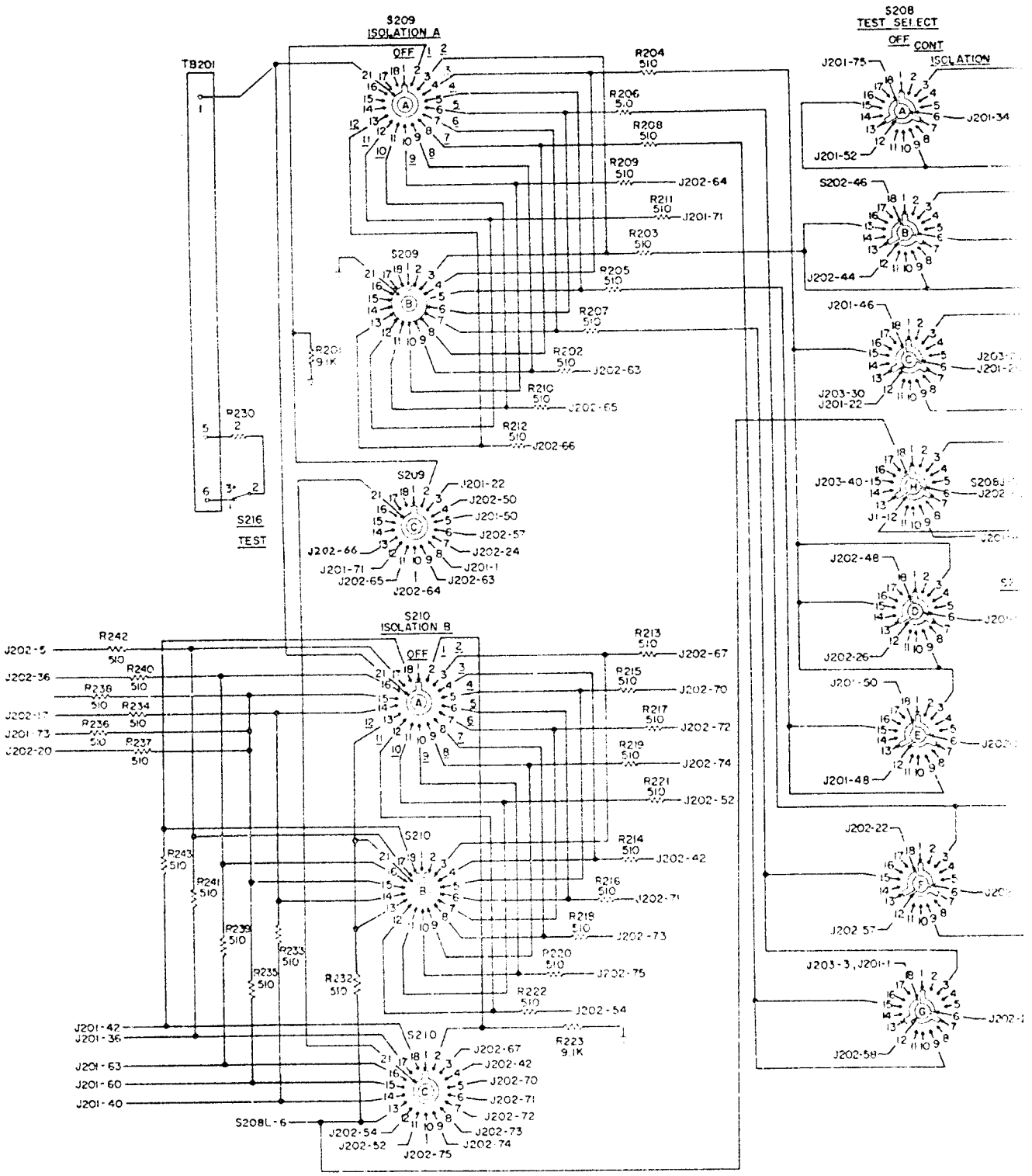

GSA KANSAS CITY 65 0931W

[redacted]

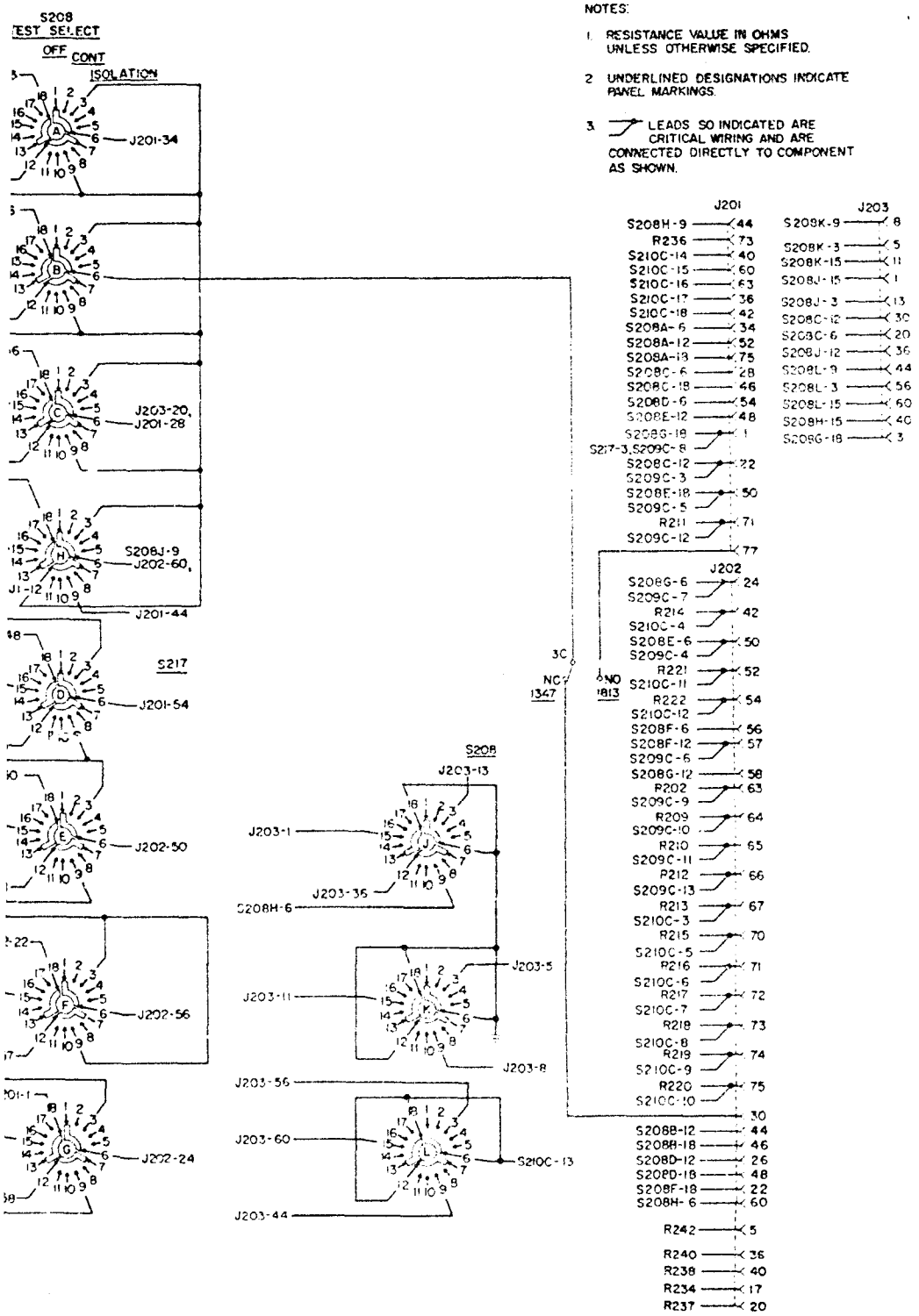

NOTES:

1. RESISTANCE VALUE IN OHMS UNLESS OTHERWISE SPECIFIED.
2. UNDERLINED DESIGNATIONS INDICATE PANEL MARKINGS.
3. LEADS SO INDICATED ARE CRITICAL WIRING AND ARE CONNECTED DIRECTLY TO COMPONENT AS SHOWN.

Figure 8-4 Schematic of PT1143 Isolation Test Circuit (Part of PT1143-P2) Issue K of Schematic Dwg No. CK176748

[redacted]

AF195421

[redacted]

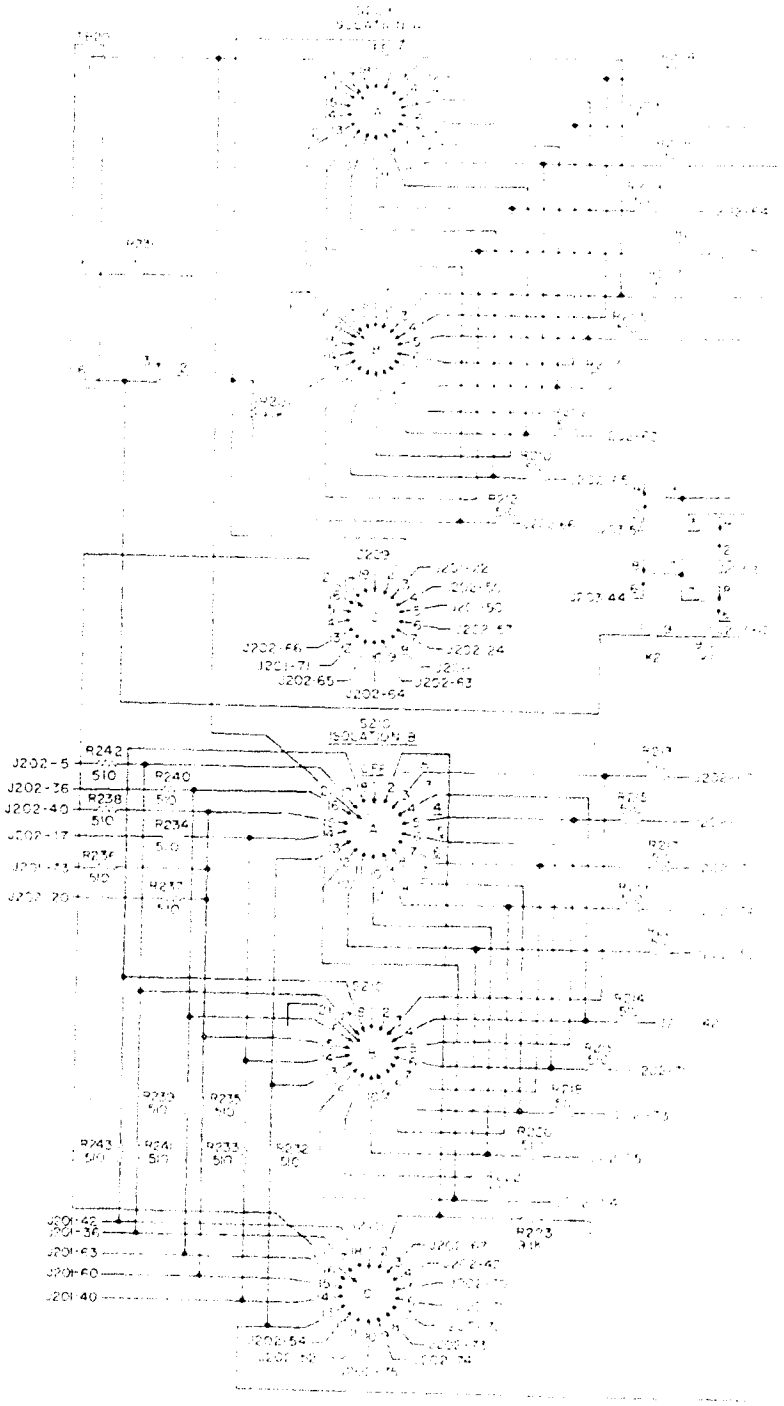

AF195421

[redacted]

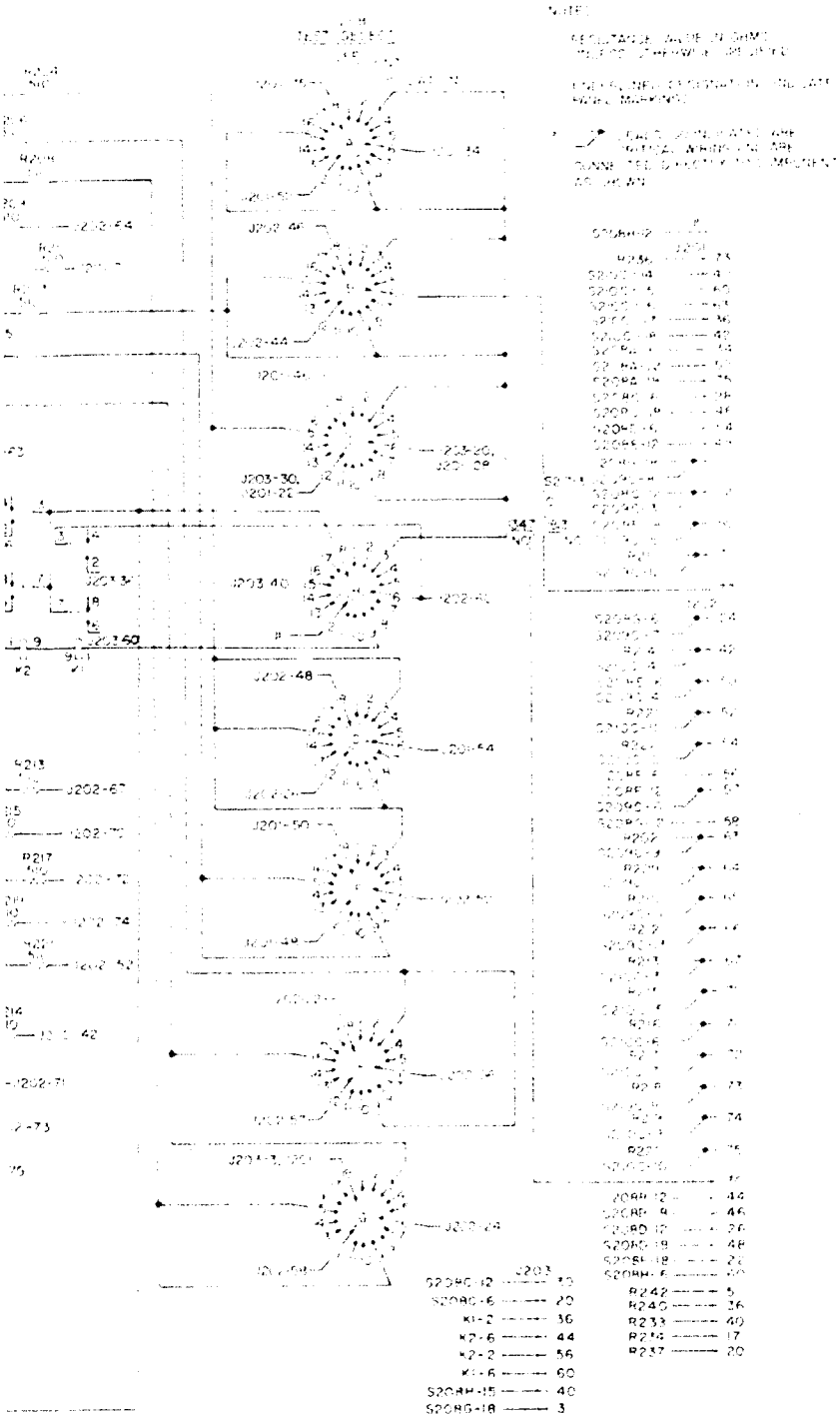

Figure 8-5 Schematic of PT1143 Isolation Test Circuit (Part of PT1143-P2) Issue G of Schematic Dwg No. CK175748

UNCLASSIFIED

UNCLASSIFIED

ENGINEERING CHANGE NOTICE

KCD-139C (8/63)

THE Bendix CORPORATION KANSAS CITY DIVISION

REL. DATE 5-26-65			ECN NO. AF7108857
ADVANCE ECN	ADVANCE ECN WAS ISSUED	FINAL ECN	SHEET 5 OF 7
~~X~~	X	X	DWG. NO. AF 195421
EQUIP. MC1833, MC1853	TITLE OPERATION AND MAINTENANCE INSTRUCTIONS PT1143 R1		ISSUE Change 5 TO Change 6 15 May'65 7 June'65
EQUIP. P/N 311782-101,102,103,104 311804-101,102,103,104	AFFECTED GAGES, PT'S, AND INSPECTION PROCEDURES		REV. 1 DATE 6-9-65 APPROVED JHF ORG. 841-1
E. P. NO. 41038-00	RELATED ECN'S		
CHARGE NO. 800-87420	SOURCE OF CHANGE Engineer*		

CHANGE REASON:
To permit the use of lesser quality SA826 switches until such time as the SA826 quality can be improved.

CHANGE DESCRIPTION: R1 ~~THIS CHANGE APPLIES TO CHANGE 5 OR LATER~~

1. Table 4-2: Changed to:

	Sequence	Range Switch Position	Rotary Switch	Rotary Switch Position	M201 Limits	Final Procedure
	40 thru 44	5 ohm	C	3 thru 7	0.25 or less	
	45	5 ohm	C	8	See Note 1	
	46 thru 49	5 ohm	C	9 thru 12	0.25 or less	
	50	5 ohm	C	13	See Note 1	
was:	40 thru 50	5 ohm	C	3 thru 13	0.25 or less	

2. Table 4-2, Sequence 57, M201 Limits: Deleted "0.25 or less; Added "See Note 1

3. Table 4-2: Changed to:

	Sequence	Range Switch Position	Rotary Switch	Rotary Switch Position	M201 Limits
	58 thru 60	5 ohm	D	3 thru 5	0.25 or less
	61	5 ohm	D	6	See Note 1
	62 thru 65	5 ohm	D	7 thru 10	0.25 or less
	66	5 ohm	D	11	See Note 1
was:	58 thru 66	5 ohm	D	3 thru 11	0.25 or less

4. Table 4-2, Sequence 72, M201 Limits: Deleted "0.25 or less;" Added "See Note 1

CLASSIFYING OFFICIAL

PREPARED	ORG.	APPROVED	ORG.
		J. H. Ferguson	841-1

DIST: B. C. Kester, D/821; M. M. Plugge, 1512; F. D. Kelly, D/844

UNCLASSIFIED

ASSIFIED

UNCLASSIFIED

ENGINEERING CHANGE NOTICE

KCD-139C (8/63)

THE Bendix CORPORATION KANSAS CITY DIVISION

REL. DATE 5-26-65			ECN NO. AE 7108857
ADVANCE ECN	ADVANCE ECN WAS ISSUED	FINAL ECN	SHEET 6 OF 7
~~X~~ R1	X	X	
EQUIP. MC1833, MC1853	TITLE OPERATION AND MAINTENANCE INSTRUCTIONS PT1143 R1		DWG. NO. AF195421
			ISSUE Change 5 TO Change 6 15 May '65 7 June '65
EQUIP. P/N 311782-101,102,103,104 311804-101,102,103,104	AFFECTED GAGES, PT'S, AND INSPECTION PROCEDURES		REV. DATE APPROVED ORG. 1 6-9-65 JHF 841-1
E. P. NO. 41038-00	RELATED ECN'S		
CHARGE NO. 800-87420	SOURCE OF CHANGE Engineer*		

CHANGE REASON:

To permit the use of lesser quality SA826 switches until such time as the SA826 quality can be improved.

CHANGE DESCRIPTION: R1 ~~THIS CHANGE APPLIES TO CHANGE 5 OR LATER~~

5. Added: Note 1: If this reading is less than 0.25 the unit is acceptable. If this reading is greater than 1.00 the unit shall be rejected. If the Burst Ht. reading is between 0.25 and 1.00 proceed as follows. Actuate the ~~S101~~ switch of the MC1833 6 cycles. Observe the resistance reading each cycle (while ~~S101~~ Burst Ht. is in the specified test position). If any reading exceeds 1.00 the unit shall be rejected. After the 6th cycle if the resistance reading is less than 0.25 the unit is acceptable. During this test do not disturb any other portion of the electrical circuitry in the unit or the tester. R1

6. Table 4-3:

Changed to:	Sequence	Range Switch Position	Rotary Switch	Rotary Switch Position	M201 Limits
	40 thru 44	5 ohm	C	3 thru 7	0.25 or less
	45	5 ohm	C	8	See Note 1
	46 thru 49	5 ohm	C	9 thru 12	0.25 or less
	50	5 ohm	C	13	See Note 1
was:	40 thru 50	5 ohm	C	3 thru 13	0.25 or less

7. Table 4-3 Sequence 54, M201 Limits: Deleted "0.25 or less" Added "See Note 1."

8. Table 4-3:

Changed to:	Sequence	Range Switch Position	Rotary Switch	Rotary Switch Position	M201 Limits
	55 thru 57	5 ohm	D	3 thru 5	0.25 or less
	58	5 ohm	D	6	See Note 1
	59 thru 62	5 ohm	D	7 thru 10	0.25 or less
	63	5 ohm	D	11	See Note
was:	55 thru 63	5 ohm	D	3 thru 11	0.25 or less

CLASSIFYING OFFICIAL

PREPARED	ORG.	APPROVED J. H. Ferguson	ORG. 841-1

DIST. R1 B. C. Kester, D/821; F. D. Kelly, D/844; M. H. Plugge, 1510

UNCLASSIFIED

R.J.

UNCLASSIFIED

ENGINEERING CHANGE NOTICE

KCD-139C (8/63)

THE Bendix CORPORATION KANSAS CITY DIVISION

REL. DATE 5-26-65			ECN NO. AE7108857
ADVANCE ECN	ADVANCE ECN WAS ISSUED	FINAL ECN	SHEET 7 OF 7
~~R1~~ X	X	X	
EQUIP. MC1833, MC1853	TITLE OPERATION AND MAINTENANCE INSTRUCTIONS PT1143 R1		DWG. NO. AF195421
			ISSUE Change 5 to Change 6 15 May'65 7 June'65
EQUIP. P/N 311782-101,102,103,104 311804-101,102,103,104	AFFECTED GAGES, PT'S, AND INSPECTION PROCEDURES		REV. DATE APPROVED ORG. 1 6-9-65 JHF 841-1
E. P. NO. 41038-00	RELATED ECN'S		
CHARGE NO. 800-87420	SOURCE OF CHANGE Engineer		

CHANGE REASON:

To permit the use of lesser quality SA826 switches until such time as the SA826 quality can be improved.

CHANGE DESCRIPTION: R1 ~~THIS CHANGE AFFECTS ONLY CHANGE 5 OF UNIT~~

9. Added note 1: If this reading is less than 0.25 the unit is acceptable. If this reading is greater than 1.00 the unit shall be rejected. If the Burst Ht. R1 reading is between 0.25 and 1.00 proceed as follows. Actuate the ~~SIDE~~ switch of the MC1853 6 cycles. Observe the resistance reading each cycle (while ~~SIDE~~ Burst Ht is in the specified test position). If any reading exceeds 1.00 the unit shall be rejected. After the 6th cycle if the resistance reading is less than 0.25 the unit is acceptable. During this test do not disturb any other portion of the electrical circuitry in the unit or the tester.

*Ref: Telecon, Ferguson/Folkins, 1512, on 5-24-65.

Calendar Date: None

DOM: Use all MC1833's and MC 1853's that meet this relaxed requirement.

CLASSIFYING OFFICIAL

PREPARED	ORG.	APPROVED	ORG.
		J. H. Ferguson	841-1

DIST. R1 B. C. Kester, D/821; F. D. Kelly, D/844; M. M. Plugge, 1512

UNCLASSIFIED