[redacted] 001408 ~~X-26618~~
~~C.2~~ [redacted]

UNCLASSIFIED

THE WURLITZER COMPAMY

NORTH TONAWANDA DIVISION
NORTH TONAWANDA NEW YORK

SC-DC-65-1110X

REPORT NUMBER 7

FOR PERIOD ENDING FEBRUARY 28, 1959

SANDIA PURCHASE ORDER 15-1536 (Item 2)

MC-818 IMPROVEMENT PROGRAM

1st Review Date 9/10/96	8 Classification U
Authority ☐ADC ☐ DOE	Contains NO DOE Classified Information
Name R. T. Duff	Coordinate Vol.
2nd Review Date 9-10-96	Contains UCNI
Authority: ADC	Comments SEE TCG-3OFF
Name W Sayre	TOP 5212

Report By: William M. Taylor
William M. Taylor
Senior Engineer

Reviewed By: R T Mead
Ralph T. Mead
Chief Engineer
Power Sources
Engineering Department

SANDIA SYSTEMATIC DECLASSIFICATION REVIEW
DOWNGRADING OR DECLASSIFICATION STAMP

U	AUTHORITY R.T. Duff
Emelda Selph 9/12/96	RECORD ID 96SN498
W Sayre 9-12-96	
PERSON VERIFYING MARKING & DATE	DATED 9/10/96

Approved By: A D Arsem
A. D. Arsem
Manager
Engineering & Research

UNCLASSIFIED

[redacted]

[redacted]

UNCLASSIFIED

TABLE OF CONTENTS

INTRODUCTION

SUMMARY

PROCEDURE

TABLE I . . . Destructive Test Data, Lot ST-240 (Item 2).

TABLE II . . . Non-Destructive Test Data, Lot ST-240 (Item 2) and Lot ST-241 (Item 7).

TABLE III . . . Manufacturing Data, Lot ST-240 (Item 2) and Lot ST-241 (Item 7).

TABLE IV . . . Sketch of Header Configuration (Item 7)

UNCLASSIFIED

[redacted]

[redacted]

001410

UNCLASSIFIED

INTRODUCTION

This report covers the experimental work on the MC-818 Battery as authorized under Sandia Purchase Order 15-1536; Item 2, Relative to Substitutes for Asbestos and Item 7, Relative to Header Configuration.

This report covers work completed from February 1, 1959 thru February 28, 1959.

UNCLASSIFIED

[redacted]

UNCLASSIFIED

SUMMARY

The firing results in groups "H" and "I" of Lot ST-240 verified results obtained in Lot ST-239 (Report 6). In comparison with the averages of sixteen standard production units, the test units in Lot ST-240 showed definite increases in voltage and an increase of 20% and better in activated life; activation time compared favorably. In group "J", fired out asbestos wrapper, activated life fell below standard units.

In post mortem of fired units, the silastic liner substitute in both groups "H" and "I" were in excellent condition. There are indications that the wrapper must be made stronger to withstand a test on the centrifuge.

Further tests will be made, using different percentages of components, in an attempt to fabricate a wrapper which can be assembled in an Air Press in the same manner as its asbestos counterpart.

The ten (10) units of Lot ST-241 were shipped to Sandia for firing.

We would conclude that the improvement in performance due to "asbestos substitutes" was solely a result of improved thermal insulation properties rather than the electrical insulation properties.

UNCLASSIFIED

[redacted]

UNCLASSIFIED

PROCEDURE

Item 2: Substitutes for Asbestos

Twelve units were fabricated in three lots of four units each with substitute insulation.

Group H-A - To replace Asbestos Wrapper (#80229) and Negative Lead Insulator (#80315).

Quartz	-	12 gram	
Veegum	-	4 gram	Need .025" thick.
Fiberglass	-	2 gram	

Group H-B - To replace Silastic Liner (#80294).

Quartz	-	25 gram	
Veegum	-	8 gram	Need .060" thick.
Fiberglass	-	4 gram	

Group I-C - To replace Asbestos Wrapper (#80229) and Negative Lead Insulator (#80315).

Fiberfrax	-	10 gram	
Veegum	-	4 gram	Need .025" thick.
Fiberglass	-	1-1/2 gram	

Group I-D - To replace Silastic Liner (#80294).

Fiberfrax	-	25 gram	
Veegum	-	8 gram	Need .060" thick.
Fiberglass	-	4 gram	

Group J - The Asbestos Wrapper was fired out at 800 F for 16 hours. (Part #80229).

The firing results are shown in Table I. The odd number units being fired at +165°F, and the even number units fired at -65°F.

UNCLASSIFIED

[redacted]

Comparison of test units (Lot ST-240 with standard units fired at -65°F.

	Standard Production	Group H	Group I	Group J
Activation Time (In Seconds)	.9675	.96 (.97-.95)	.995 (1.00-.99)	.97 (.97-.97)
Voltage at 4 Seconds	486.5	489.5 (489-490)	488.0 (487-489)	490.0 (490-490)
Peak Voltage	497.6	505.5 (505-506)	505.0 (504-506)	504.0 (505-503)
Activated Life (In Seconds)	161.0	197.0 (200-194)	195.5 (191-200)	158.0 (161-155)

Note: Results of standard production are based on the averages of sixteen consecutive units. Results of test units are based on the averages of two units.

Comparison of test units (Lot ST-240) with standard units fired at +165°F.

	Standard Production	Group H	Group I	Group J
Activation Time (In Seconds)	.570	.595 (.59-.60)	.595 (.60-.59)	.590 (.59-.59)
Voltage at 4 Seconds	464	476.0 (477-475)	474.5 (471-478)	471.5 (471-472)
Peak Voltage	476	489.5 (490-489)	486.0 (483-489)	485.0 (483-487)
Activated Life (In Seconds)	324	390.5 (387-394)	393.0 (398-388)	302.5 (298-307)

Item 7: Header Configuration

Ten MC-818 batteries (Lot ST-241) were assembled with a header configuration as per sketch shown in Table IV.

Manufacturing Data is shown in Table III (Lot ST-241), and Non-Destructive Test Data is shown in Table II (Lot ST-241).

[redacted]

001415

UNCLASSIFIED

TABLE I

Destructive Test Data, Lot ST-240 (Item 2).

UNCLASSIFIED

[redacted]

ORDER NO. _____

TR - ISSUE _____

THE WURLITZER COMPANY

NORTH TONAWANDA, N. Y.

DESTRUCTIVE TEST DATA

MODEL NO. MC-818

LOT NO. ST-240

SERIAL NO.	TEST PARAGRAPH	TEMPERATURE F.	LOAD MICROFARADS	SHUNT RES. MEGOHMS	SQUIB USED	TEST DATE	ACTIVATION TIME SECONDS	VOLTAGE AT 4 SECONDS	PEAK VOLTAGE	ACTIVATED LIFE SECONDS	TESTED BY	REMARKS
MH H-1	2.7.1.3	165	210	.440	TS	2/2/59	.59	477	490	387	E.D.	Quartz, Veegum, Fiberglass
MH H-3	"	"	"	"	BS	"	.60	475	489	394	"	
MH I-1	"	"	"	"	TS	"	.60	471	483	398	"	Fiberfrax, Veegum, Fiberglass
MH I-3	"	"	"	"	BS	"	.59	478	489	388	"	
MH J-1	"	"	"	"	TS	"	.59	471	483	298	"	Asbestos wrapper fired out
MH J-3	"	"	"	"	BS	"	.59	472	487	307	"	at 800 F for 16 hours.
MH												
MH												
MH												
MH												
MH												
MH												
MH												
MH												
MH												
MH												
MH												
MH												
MH												
MH												

[redacted]

UNCLASSIFIED

UNCLASSIFIED

001416

PAGE NO. _____

FORM NO. 211-179

ORDER NO. _____

TR - ISSUE _____

THE WURLITZER COMPANY

NORTH TONAWANDA, N. Y.

DESTRUCTIVE TEST DATA

MODEL NO. MC-818

LOT NO. SF-240

[redacted]

UNCLASSIFIED

SERIAL NO.	TEST PARAGRAPH	TEMPERATURE F.	LOAD MICROFARADS	SHUNT RES. MEGOHMS	SQUIB USED	TEST DATE	ACTIVATION TIME SECONDS	VOLTAGE AT 4 SECONDS	PEAK VOLTAGE	ACTIVATED LIFE SECONDS	TESTED BY	REMARKS
MH H-2	2.7.1.2	-65	210	1.20	TS	2/2/59	.97	489	505	200	E.D.	Quartz, Veegum, Fiberglass
MH H-4	"	"	"	"	BS	"	.95	490	506	194	"	
MH I-2	"	"	"	"	TS	"	1.00	487	504	191	"	Fiberfrax, Veegum, Fiberglass
MH I-4	"	"	"	"	BS	"	.99	489	506	200	"	
MH J-2	"	"	"	"	TS	"	.97	490	505	161	"	Asbestos wrapper fired out
MH J-4	"	"	"	"	BS	"	.97	490	503	155	"	at 800°F for 16 hours.
MH												
MH												
MH												
MH												
MH												
MH												
MH												
MH												
MH												
MH												
MH												
MH												
MH												
MH												

[redacted]

FORM NO. 231-179

UNCLASSIFIED

001417

PAGE NO. _____

[redacted]

001418

UNCLASSIFIED

TABLE II

Non-Destructive Test Data, Lot ST-240 (Item 2)
and Lot ST-241 (Item 7).

[redacted]

THE WURLITZER COMPANY
NORTH TONAWANDA DIVISION

NON-DESTRUCTIVE TEST DATA

MODEL MC-818 Specials

LOT No. ST-240

SERIAL No.	SERIAL CODE	DATE TESTED	FOUR RESISTANCE SQ. 1 (OHMS)	FOUR RESISTANCE SQ. 2 (OHMS)	LEAKAGE (MICROAMPS) (1) *	(2) SQ. 1	(3) SQ. 2	(10) *	PRESSURE LEAK TEST	POLARITY TEST	INSPECTOR	REMARKS
MH- ST-240	H-1	2/2/59	1.29	1.32	1	1	1	1	A.M.	A.M.	H.B.	
MH- "	H-2	"	1.31	1.33	1	1	1	1	"	"	"	
MH- "	H-3	"	1.30	1.31	1	1	1	1	"	"	"	
MH- "	H-4	"	1.31	1.32	1	1	1	1	"	"	"	
MH- "	I-1	"	1.27	1.38	1	1	1	1	"	"	"	
MH- "	I-2	"	1.30	1.31	1	1	1	1	"	"	"	
MH- "	I-3	"	1.25	1.30	1	1	1	1	"	"	"	
MH- "	I-4	"	1.32	1.33	1	1	1	1	"	"	"	
MH- "	J-1	"	1.26	1.34	1	1	1	1	"	"	"	
MH- "	J-2	"	1.32	1.32	1	1	1	1	"	"	"	
MH- "	J-3	"	1.32	1.29	1	1	1	1	"	"	"	
MH- "	J-4	"	1.33	1.30	1	1	1	1	"	"	"	
MH-												
MH-												
MH-												
MH-												
MH-												
MH-												
MH-												
MH-												

[redacted]

[redacted]

DECLASSIFIED

001419

THE WURLITZER COMPANY
NORTH TONAWANDA DIVISION

MODEL MC-818

NON-DESTRUCTIVE TEST DATA

LOT No. ST-241

SERIAL No.	SERIAL CODE	DATE TESTED	SQUELCH RESISTANCE SQ. 1 (OHMS)	SQUELCH RESISTANCE SQ. 2 (OHMS)	LEAKAGE (MICROAMPS) (1) +	(2) SQ. 1	(3) SQ. 2	(10) −	PRESSURE LEAK TEST	POLARITY TEST	INSPECTOR	REMARKS
MH- ST-241	1	1/30/59	1.27	1.34	1	1	1	1	A.M.	A.M.	D.B.	
MH- "	2	"	1.30	1.32	1	1	1	1	"	"	"	
MH- "	3	"	1.34	1.32	1	1	1	1	"	"	"	
MH- "	4	"	1.28	1.35	1	1	1	1	"	"	"	
MH- "	5	"	1.27	1.37	1	1	1	1	"	"	"	
MH- "	6	"	1.34	1.30	1	1	1	1	"	"	"	
MH- "	7	"	1.35	1.30	1	1	1	1	"	"	"	
MH- "	8	"	1.28	1.30	1	1	1	1	"	"	"	
MH- "	9	"	1.32	1.34	1	1	1	1	"	"	"	
MH- "	10	"	1.30	1.28	1	1	1	1	"	"	"	
MH-												
MH-												
MH-												
MH-												
MH-												
MH-												
MH-												
MH-												
MH-												
MH-												

[redacted]

[redacted]

001420

[redacted]

001421

UNCLASSIFIED

TABLE III

Manufacturing Data, Lot ST-240 (Item 2) and Lot ST-241 (Item 7).

UNCLASSIFIED

[redacted]

THE WURLITZER COMPANY
NORTH TONAWANDA, NEW YORK

MODEL Specials

MANUFACTURING DATA

LOT NO. ST-240

Serial No.	Code No.	Date Mfg.	Metal Foil No.	Electrolyte Lot No.	Stack Pad Lot No.	Weight (Grms) Stack Pads	Weight (Grms) Cell Stack	Stack and Pad Inspector	Final Drying Time	Final Drying Temp.	Final Drying Oven No.	Final Drying Date Removed	Prefusion Peak Voltage	Prefusion Loaded Voltage	Remarks
	1959														
MH H-1	1/30	BQ-792	E242	MPP-914	18.060	81.737	S.	16 hr	138	5	1/31	530	500		[redacted]
MH H-2	"	"	"	"	18.241	81.682	"	"	"	"	"	530	490		
MH H-3	"	"	"	"	18.140	81.916	"	"	"	"	"	530	490		
MH H-4	"	"	"	"	18.094	81.671	"	"	"	"	"	530	490		
MH I-1	"	"	"	"	18.143	82.102	"	"	"	"	"	528	490		
MH I-2	"	"	"	"	18.164	81.762	"	"	"	"	"	530	490		
MH I-3	"	"	"	"	18.088	81.716	"	"	"	"	"	530	499		
MH I-4	"	"	"	"	18.130	81.637	"	"	"	"	"	525	490		
MH J-1	"	"	"	"	18.094	81.909	"	"	"	"	"	530	495		
MH J-2	"	"	"	"	18.174	81.456	"	"	"	"	"	530	490		
MH J-3	"	"	"	"	18.035	81.885	"	"	"	"	"	530	490		
MH J-4	"	"	"	"	18.272	81.814	"	"	"	"	"	530	499		
MH															
MH															
MH															
MH															
MH															
MH															
MH															
MH															
MH															
MH															
MH															

UNCLASSIFIED

UNCLASSIFIED

[redacted]

001422

THE WURLITZER COMPANY
NORTH TONAWANDA, NEW YORK

MODEL MC-818

MANUFACTURING DATA

LOT NO. ST-241

Serial No.	Code No.	Date Mfg. 1959	BiMetal Lot No.	Electrolyte Lot No.	Stack Pad Lot No.	Weight (Grms) Stack Pads	Weight (Grms) Cell Stack	Stack and Pad Inspector	Time	Final Drying Temp.	Final Drying Oven No.	Final Drying Date Removed 1959	Prefusion Peak Voltage	Prefusion Loaded Voltage	Remarks
MH ST-241-1		1/29	BQ-782	E242	MPP-914	18.317	83.138	S.P.	15 hr	145	5	1/30	530	490	
MH -2		"	"	"	"	18.345	82.943	"	"	"	"	"	530	498	
MH -3		"	"	"	"	18.395	83.089	"	"	"	"	"	530	490	
MH -4		"	"	"	"	18.348	83.056	"	"	"	"	"	530	490	
MH -5		"	"	"	"	18.359	82.887	"	"	"	"	"	530	490	
MH -6		"	"	"	"	18.363	83.027	"	"	"	"	"	530	490	
MH -7		"	"	"	"	18.331	82.990	"	"	"	"	"	530	490	
MH -8		"	"	"	"	18.345	82.756	"	"	"	"	"	530	490	
MH -9		"	"	"	"	18.382	82.984	"	"	"	"	"	530	490	
MH -10		"	"	"	"	18.392	83.104	"	"	"	"	"	530	490	
MH															
MH															
MH															
MH															
MH															
MH															
MH															
MH															
MH															
MH															
MH															
MH															
MH															

[redacted]

UNCLASSIFIED

[redacted]

001423

[redacted]

UNCLASSIFIED

TABLE IV

Sketch of Header Configuration (Item 7).

[redacted]

[redacted]

UNCLASSIFIED

HEADER CONFIGURATION

10 MC-818 Batteries

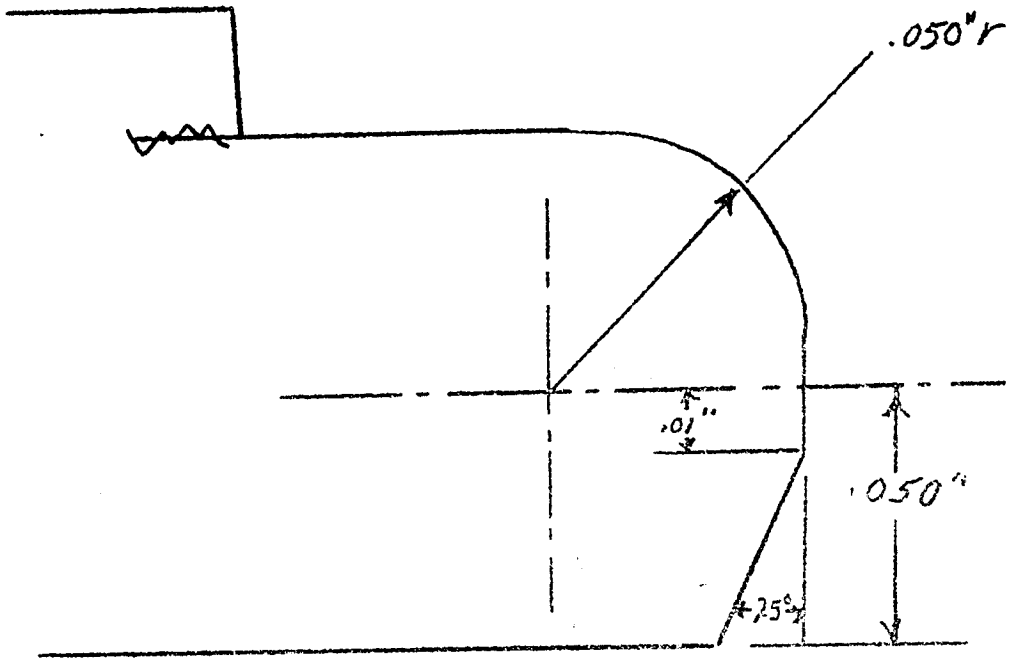

UNCLASSIFIED

[redacted]