[redacted]

UNCLASSIFIED

RS 3150 2390
THIS DOCUMENT CONTAINS
34 PAGES, COPY NO. 50
OF 53 COPIES, SERIES A
FOR ORG 3141

Development Report

RECORD COPY
DO NOT TAKE FROM THIS ROOM

SC-DR-72 0664
RS 3150/2390

ANALYSIS OF AN UNDERWATER ACOUSTIC SOURCE (U)

Robert S. Bernard
Geophysical Fluid Dynamics Division

SANDIA SYSTEMATIC DECLASSIFICATION REVIEW

1st Review Date: 3-11-96 Authority: ☐ADC ☑ADD Name: W C Layne	Determination (Circle Numbers): 1. Classification Retained 2. Classification Changed to: U 3. Contains No DOE Classified Information 4. Coordinate With: 5. Contains UCNI? 6. Comments:
2nd Review Date: 3-22-96 Authority: ADD Name: B. Green	

[redacted]

Classified by James K. Cole
Supv., Geophys. Fl. Dyn. Div. 5644
November 8, 1972

SANDIA SYSTEMATIC DECLASSIFICATION REVIEW
DECLASSIFICATION STAMP

CLASSIFICATION CHANGED TO: U	AUTHORITY: Bruce Green
Emelda Segon 05-21-96 PERSON CHANGING MARKING & DATE	RECORD ID: 96SN208
W. C. Layne 6-13-96 PERSON VERIFYING MARKING & DATE	DATED: 03-22-96

[redacted]

(show effective date or event, if any)

by authority of [redacted]
(Name of authorizing official)

Printed December 1972

UNCLASSIFIED

SANDIA LABORATORIES

OPERATED FOR THE UNITED STATES ATOMIC ENERGY COMMISSION BY SANDIA CORPORATION | ALBUQUERQUE, NEW MEXICO

MICROFICHE

[redacted]

[redacted]

UNCLASSIFIED

Issued by Sandia Laboratories,
a prime contractor to the United States Atomic Energy Commission

---

NOTICE

This report was prepared as an account of work sponsored by the United States Government. Neither the United States nor the United States Atomic Energy Commission, nor any of their employees, nor any of their contractors, subcontractors, or their employees, makes any warranty, express or implied, or assumes any legal liability or responsibility for the accuracy, completeness or usefulness of any information, apparatus, product or process disclosed, or represents that its use would not infringe privately owned rights.

UNCLASSIFIED

[redacted]

[redacted]

UNCLASSIFIED

SC-DR-72 0664

ANALYSIS OF AN UNDERWATER ACOUSTIC SOURCE (U)

RS 3150/2390

Robert S. Bernard
Geophysical Fluid Dynamics Division 5644
Sandia Laboratories, Albuquerque, New Mexico 87115

December 1972

ABSTRACT (U)

An underwater acoustic source, consisting of an internally driven spherical gas bubble, is analyzed for the cases of piston drive and pneumatic mass injection. The linearized radial motion is found, and the effect of nonlinearity is determined. The linear analysis is then applied to a cylindrical source, yielding expressions for natural frequency and power output, and comparison is made with experimental observations.

[redacted]

UNCLASSIFIED

[redacted]

TABLE OF CONTENTS

		Page
I.	Introduction	5
II.	Statement of the Problem	5
III.	Bubble Driving Mechanisms	8
IV.	Analysis of a Cylindrical Acoustic Generator	16
V.	Conclusion	25
	References	26
	Appendix	29

LIST OF ILLUSTRATIONS

Figure 1.	Plot of B_{11}/x_o vs ω/ω_o for Spherical Air Bubbles in Water	13
Figure 2.	Idealized Acoustic Generator	18
Figure 3.	Natural Frequency vs Ambient Pressure for the SEA Piston-Driven Acoustic Generator	23
Figure 4.	Maximum Average Power Output vs Ambient Pressure for the SEA Piston-Driven Acoustic Generator	24

I. Introduction

The acoustic response of gas bubbles has been of interest for a number of years in underwater acoustics.[1] For the most part, attention has been restricted to the behavior of bubbles as acoustic scatterers, and a number of authors, including Spitzer[2] and Zwick,[3] have dealt with the linear acoustic response. The nonlinear acoustic response has been examined by Bernard[4] and by Norwood and Bernard.[5] In response to national interest in the generation of high intensity monochromatic underwater sound, Sandia has developed generators which are, in effect, internally driven cylindrical gas bubbles[6] (as opposed to bubbles driven by an external acoustic field[4,5]). The internal driving mechanisms used are piston drive and pneumatic mass injection. The present work applies the analysis of Ref. 4 to an internally driven spherical bubble and then extends the treatment to a cylindrical bubble.

II. Statement of the Problem

The equation of motion for a spherical underwater gas bubble of negligible mass (originally derived by Herring[7]) is given by Cole[8] as

$$R\ddot{R} + \frac{3}{2}\dot{R}^2 - \frac{1}{Rc}\frac{d}{dt}\left(R^2\dot{R}^2\right) = \frac{R}{\rho_\infty c}\left(1 - \frac{\dot{R}}{c}\right)\dot{\tilde{P}} + \frac{\tilde{P} - P_\infty}{\rho_\infty} \qquad (2.1)$$

where R is the bubble radius, c is the sonic speed in water, t is time, ρ_∞ is the ambient water density ≈ constant, $\tilde{P}$ is the water pressure at R, P_∞ is the ambient water pressure = constant, and differentiation with respect to time is denoted by a dot and also by d/dt. Equation (2.1) is derived from the fluid mechanical equations of continuity and momentum. The terms in 1/c

represent approximately the effect of compressibility (i.e., non-zero divergence of velocity); the term proportional to $\tilde{P}$ represents the acoustic radiation of energy; and the derivation of Eq. (2.1) requires that[8]

$$\left|\frac{\dot{R}}{c}\right| \ll 1 \quad . \tag{2.2}$$

In the limit as $c \to \infty$, the equation for the incompressible case is recovered.[9]

As in Ref. 4, attention is restricted to small but finite variations of R such that

$$\left(\frac{R}{R_o} - 1\right)^2 \ll 1 \tag{2.3}$$

where R_o is the bubble radius at equilibrium. Adopting a procedure analogous to the stationary perturbation theory used in quantum mechanics,[4,10] R(t) is expressed as

$$R(t) = R_o\left[1 + \sum_{n=1}^{\infty} \epsilon^n r_n(t)\right] \tag{2.4}$$

where ϵ is an ordering parameter lying arbitrarily between zero and unity, and the series is required to be uniformly convergent. The parameter ϵ is introduced in order to force the terms on the right-hand side of Eq. (2.4) to be linearly independent. After the governing equations for the functions r_n have been established, ϵ can be set equal to unity without loss of generality. Inserting Eq. (2.4) into Eq. (2.3) produces

$$\varepsilon^2 r_1 \quad (2.5)$$

for uniform convergence.

The water/gas interface is assumed to be a thin elastic membrane so that the pressure in the gas P is related to $\tilde{P}$ by

$$P - P_m(R) = \tilde{P} \quad (2.6)$$

where P_m is the inward normal stress due to the membrane. For small deviations of R from R_o, P_m is given approximately by

$$P_m \approx P_{mo} + P_o \, \alpha \sum_{n=1}^{\infty} \varepsilon^n r_n \quad (2.7)$$

where

$$P_{mo} = P_m(R_o) \quad , \quad (2.8)$$

$$\alpha = \frac{R_o}{P_o} \left(\frac{dP_m}{dR}\right)_{R=R_o} \quad , \quad (2.9)$$

and P_o is the gas pressure at equilibrium.

The expansion and compression of the gas are assumed adiabatic, i.e.,

$$\frac{P}{\rho^\gamma} = \text{constant} \quad (2.10)$$

where ρ and γ are the density and specific heat ratio of the gas, respectively.

III. Bubble Driving Mechanisms

Two internal mechanisms for driving the bubble are considered:

(A) Piston Drive

Suppose that the bubble volume V can be varied by an internal piston such that

$$V(t) = \frac{4\pi}{3}\left[R^3 - R_o^{\,3}\,\epsilon x(t)\right] \tag{3.1}$$

where

$$\epsilon^2 x^2 \ll 1 \quad . \tag{3.2}$$

With regard to Eq. (3.1), Eq. (2.10) becomes

$$\frac{P}{P_o} = \left(\frac{R^3}{R_o^{\,3}} - \epsilon x\right)^{-\gamma} \tag{3.3}$$

Substituting Eqs. (2.4), (2.6), (2.7), and (3.3) into Eq. (2.1), coefficients of equal powers of ϵ must be equal (due to the arbitrariness of ϵ), and an infinite set of equations is generated for the functions r_n:

$$\epsilon^1: \qquad \ddot{r}_1 + \omega_o^{\,2}\frac{R_o}{c}\dot{r}_1 + \omega_o^{\,2} r_1 = K\gamma x + K\gamma\frac{R_o}{c}\dot{x} \tag{3.4}$$

$$\epsilon^2: \quad \ddot{r}_2 + \omega_o^2 \frac{R_o}{c} \dot{r}_2 + \omega_o^2 r_2 = K\left[\frac{\gamma}{2}(\gamma + 1)(3r_1 - x)^2 - 3\gamma r_1^2\right]$$

$$+ K \frac{R_o}{c}\left\{\gamma(\gamma + 1)(3r_1 - x)(3\dot{r}_1 - \dot{x}) - 6\gamma r_1 \dot{r}_1\right.$$

$$\left. - \left(r_1 - \frac{R_o}{c}\dot{r}_1\right)\left[(3\gamma + 1)\dot{r}_1 - \gamma\dot{x}\right]\right\} - \ddot{r}_1 r_1$$

$$- \frac{3}{2}\dot{r}_1^2 + \frac{2R_o}{c}\dot{r}_1\ddot{r}_1 \tag{3.5}$$

$$\vdots$$

$$\epsilon^n: \quad \ddot{r}_n + \omega_o^2 \frac{R_o}{c}\dot{r}_n + \omega_o^2 r_n = KF_n(r_1, \ldots, r_{n-1}) \tag{3.6}$$

where

$$K = \frac{P_o}{\rho_\infty R_o^2} = \frac{P_{mo} + P_\infty}{\rho_\infty R_o^2} \tag{3.7}$$

and ω_o is the natural frequency of oscillation, given by

$$\omega_o^2 = K(3\gamma + \alpha) \tag{3.8}$$

in agreement with other authors.[16]

(B) Pneumatic Drive

Suppose that the gas mass M enclosed by the bubble can be varied by pneumatic mass injection such that

UNCLASSIFIED

$$M = M_o\left[1 + \epsilon x(t)\right] \tag{3.9}$$

where M_o is the gas mass at equilibrium. With regard to Eq. (3.9), Eq. (2.10) becomes

$$\frac{P}{P_o} = (1 + \epsilon x)^{\gamma}\left(\frac{R}{R_o}\right)^{-3\gamma} \tag{3.10}$$

Substituting Eqs. (2.4), (2.6), (2.7), and (3.10) into Eq. (2.1) and equating coefficients of equal powers of ϵ again yields an infinite set of equations for the functions r_n:

$$\epsilon^1: \quad \ddot{r}_1 + \omega_o^2 \frac{R_o}{c}\dot{r}_1 + \omega_o^2 r_1 = K\gamma x + K\gamma \frac{R_o}{c}\dot{x} \tag{3.4}$$

$$\begin{aligned}\epsilon^2: \quad \ddot{r}_2 + \omega_o^2 \frac{R_o}{c}\dot{r}_2 + \omega_o^2 r_2 = {} & K\left[\frac{\gamma}{2}(\gamma - 1)x^2 + \frac{3\gamma}{2}(3\gamma + 1)r_1^2 - 3\gamma^2 r_1 x\right] \\ & + K\frac{R_o}{c}\left\{\left(r_1 - \frac{R_o}{c}\dot{r}_1\right)\left[\gamma\dot{x} - (3\gamma + \alpha)\dot{r}_1\right]\right. \\ & \left. + \gamma(\gamma - 1)\dot{x}x + 3\gamma(\gamma + 1)\dot{r}_1 r_1 - 3\gamma^2(\dot{r}_1 x + \dot{x}r_1)\right\} \\ & - r_1\ddot{r}_1 - \frac{3}{2}\dot{r}_1^2 + \frac{2R_o}{c}\dot{r}_1\ddot{r}_1\end{aligned} \tag{3.11}$$

$$\vdots$$

$$\epsilon^n: \quad \ddot{r}_n + \omega_o^2 \frac{R_o}{c}\dot{r}_n + \omega_o^2 r_n = KG_n(r_1, \ldots, r_{n-1}) \quad . \tag{3.12}$$

UNCLASSIFIED

For cases (A) and (B) the ϵ^1 equations are identical, indicating that the linear response is the same for a given piston drive or pneumatic drive (i.e., when the fractional volume and mass variations $\epsilon x(t)$ are the same). The ϵ^2 equations (3.5) and (3.11) determine the first nonlinear corrections to the motion in cases (A) and (B). From the two sets of equations, (3.4)-(3.6) and (3.11)-(3.12), it is evident that the expansion (2.4) in ϵ generates a systematic iteration scheme for the functions r_n. For $n > 1$, the solutions to the preceding $n - 1$ equations combine with $x(t)$ to form the forcing functions F_n, $G_n = O(r_1^n)$ in the nth equation. The ordering parameter ϵ is now set equal to unity[4,10] and Eqs. (2.4), (3.1), and (3.9) are replaced respectively by

$$R(t) = R_o\left[1 + \sum_{n=1}^{\infty} r_n(t)\right] \tag{3.13}$$

$$V(t) = \frac{4\pi}{3}\left[R^3 - R_o^3\, x(t)\right] \tag{3.14}$$

$$M(t) = M_o\left[1 + x(t)\right] \quad . \tag{3.15}$$

Consider now a forcing function given by

$$x(t) = x_o \cos \omega t \tag{3.16}$$

where $x_o^2 \ll 1$. Positive $\dot{x}$ corresponds to compressive piston stroke (for piston drive) or influx of gas (for pneumatic drive). Subject to Eq. (3.16), Eq. (3.4) becomes

$$\ddot{r}_1 + \omega_o^2 \frac{R_o}{c} \dot{r}_1 + \omega_o^2 r_1 = K\gamma x_o \cos(\omega t + \psi) \tag{3.17}$$

where

$$\psi = \tan^{-1}\left(\frac{\omega R_o}{c}\right) \quad . \tag{3.18}$$

The transient solution to Eq. (3.17) dies out in time due to the acoustic radiation damping term $\omega_o^2 \frac{R_o}{c} \dot{r}_1$, leaving the steady state solution

$$r_1 = B_{11} \cos(\omega t + \varphi_{11}) \tag{3.19}$$

where

$$B_{11} = \frac{\gamma x_o}{3\gamma + \alpha} \left[\left(1 - \frac{\omega^2}{\omega_o^2}\right)^2 + \frac{\omega^2 R_o^2}{c^2}\right]^{-\frac{1}{2}} \tag{3.20}$$

and

$$\varphi_{11} = \psi + \tan^{-1}\left[\frac{\omega R_o}{c\left(1 - \frac{\omega^2}{\omega_o^2}\right)}\right] \quad . \tag{3.21}$$

Figure 1 presents a plot of B_{11}/x_o vs ω/ω_o for the case of a strengthless membrane ($\alpha = 0$, $P_\infty = P_o$) enclosing an air bubble in water ($\gamma = 1.4$, $\rho_\infty = 1.94$ slug/ft^3, $c = 4900$ ft/sec). In this case, the natural frequency $\omega_o = \sqrt{3\gamma P_\infty/\rho_\infty R_o^2}$.

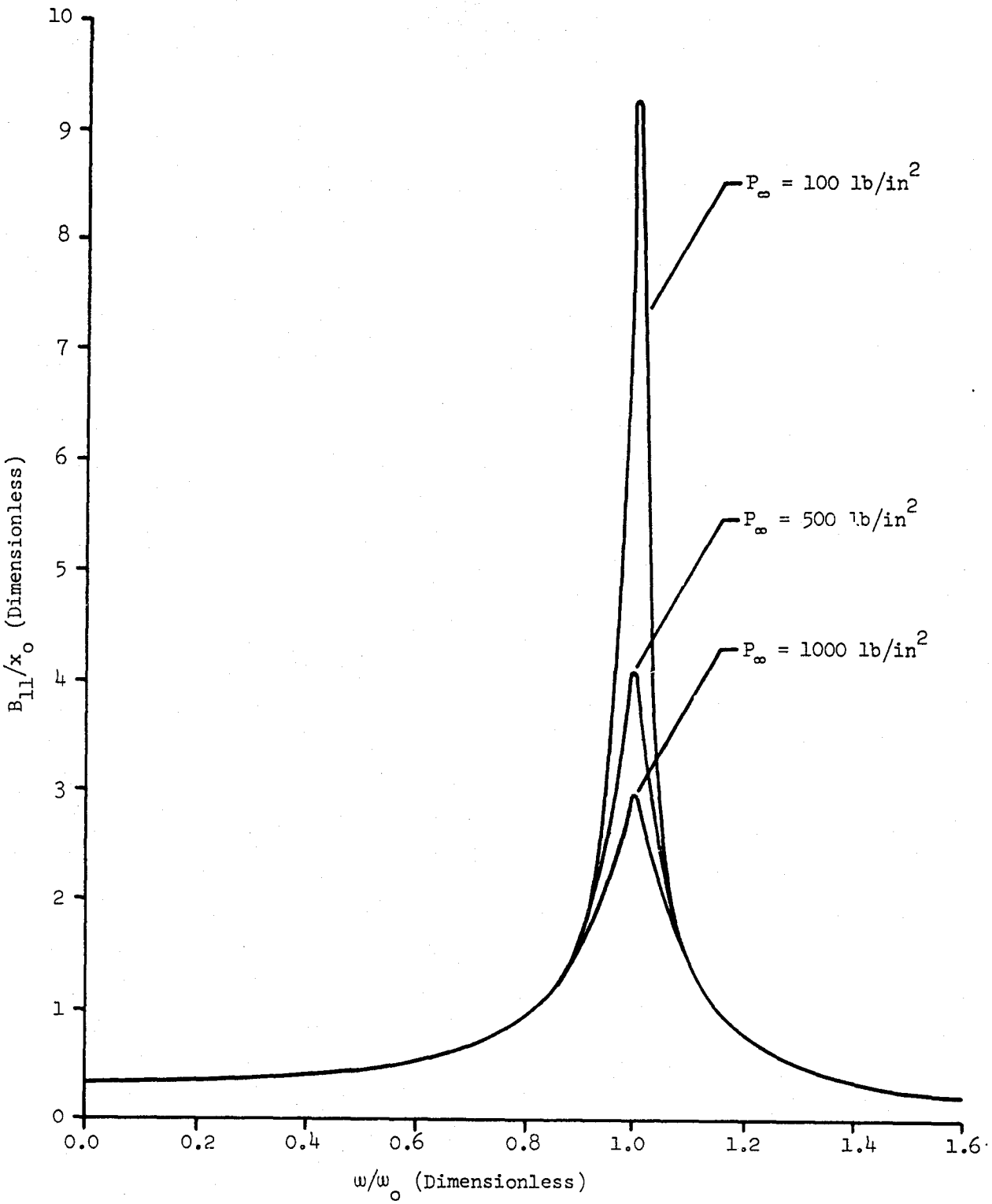

Figure 1. Plot of B_{11}/x_o vs. ω/ω_o for Spherical Air Bubbles in Water.

The solution for r_2 will not be determined explicitly here, but the reader is referred to Ref. 4 where r_2 is determined for the simpler case of a bubble driven by an external acoustic field. Substitution of Eq. (3.19) into Eqs. (3.5) and (3.11) produces equations whose right-hand sides are proportional to $\sin^2(\omega t + \varphi)$, $\cos^2(\omega t + \varphi)$, and $\cos(\omega t + \varphi)\sin(\omega t + \varphi)$. Such equations can be rewritten producing equations of the form

$$\ddot{r}_2 + \omega_o^2 \frac{R_o}{c} \dot{r}_2 + \omega_o^2 r_2 = \omega_o^2 B_{20} + \omega_o^2 b_{22} \cos(2\omega t + \psi_{22}) \tag{3.22}$$

where ψ_{22} is a constant and B_{20} and b_{22} are constants proportional to B_{11}^2. The steady state solution to Eq. (3.22) is

$$r_2 = B_{20} + B_{22} \cos(2\omega t + \varphi_{22}) \tag{3.23}$$

where φ_{22} is a constant and

$$B_{22} = b_{22} \left[\left(1 - \frac{4\omega^2}{\omega_o^2}\right)^2 + \frac{4\omega^2 R_o^2}{c^2} \right]^{-\frac{1}{2}} \tag{3.24}$$

For $n > 2$ the governing equations for the functions $r_n(t)$ have the general form

$$\ddot{r}_n + \omega_o^2 \frac{R_o}{c} \dot{r}_n + \omega_o^2 r_n = \omega_o^2 \sum_{m=0}^{n} b_{nm} \cos(m\omega t + \psi_{nm}) \tag{3.25}$$

where b_{nm} and ψ_{nm} are constants. When n is even, b_{nm} is nonzero only for m even; when n is odd, b_{nm} is nonzero only for m odd. Equation (3.25) leads

to steady state solutions of the form

$$r_n(t) = \sum_{m=0}^{n} B_{nm} \cos (m\omega t + \varphi_{nm}) \tag{3.26}$$

where B_{nm} and φ_{nm} are constants, and

$$B_{nm} = b_{nm} \left[\left(1 - \frac{m^2\omega^2}{\omega_o^2} \right)^2 + \frac{m^2\omega^2 R_o^2}{c^2} \right]^{-\frac{1}{2}} \tag{3.27}$$

It is thus seen from Eqs. (3.22)-(3.27) that the effect of nonlinearity in the steady state is the excitation of harmonics of the driving frequency ω. Resonance occurs in the mth term of r_n whenever $\omega = \omega_o/m$ ($m = 1, 2, \ldots, n$). When $m > 1$, this is known as subharmonic resonance which is a well-known property of nonlinear oscillators.[11] For a sinusoidal forcing function as in Eq. (3.16), the relative nonlinear contribution to the motion is largest at the first subharmonic resonance $\omega = \omega_o/2$, when the ratio B_{22}/B_{11} is maximized. Nonlinear effects can also be significant at the natural resonance $\omega = \omega_o$, when B_{11} is maximized[4] (recalling that $B_{22} \propto B_{11}^2$).

For a non-sinusoidal forcing function $x(t)$, Eq. (3.16) is replaced by a Fourier series

$$x(t) = x_o \sum_{n=1}^{\infty} \alpha_n \cos (n\omega t + \psi_n) \tag{3.28}$$

where α_n and ψ_n are constants. Substitution of Eq. (3.28) into Eq. (3.4) leads to the steady state solution

$$r_1 = \frac{\gamma x_o}{3\gamma + \alpha} \sum_{n=1}^{\infty} \beta_n \cos(n\omega t + \varphi_n) \tag{3.29}$$

where

$$\beta_n = \alpha_n \left[\left(1 - \frac{n^2\omega^2}{\omega_o^2}\right)^2 + \frac{n^2\omega^2 R_o^2}{c^2} \right]^{-\frac{1}{2}} \tag{3.30}$$

and

$$\varphi_n = \tan^{-1} \left[\frac{n\omega R_o}{c\left(1 - \frac{n^2\omega^2}{\omega_o^2}\right)} \right] \tag{3.31}$$

From Eq. (3.30) it is seen that when $\omega = \omega_o$, the leading term in Eq. (3.29) predominates, and r_1 is essentially sinusoidal if $\omega_o^2 R_o^2/c^2 \ll 1$. Hence, to produce a sinusoidal oscillation in the bubble radius it is not necessary to impose a sinusoidal forcing function, so long as the fundamental $\omega \approx \omega_o$ and $\omega_o^2 R_o^2/c^2 \ll 1$. Substitution of Eq. (3.29) into Eqs. (3.5)-(3.6) and (3.11)-(3.12) results in equations which are identical in form to Eq. (3.25) with the summation going from $m = 0$ to $m = \infty$.

IV. Analysis of a Cylindrical Acoustic Generator

The analysis of Chapters II and III is now extended to the case of a cylindrical bubble, in an attempt to model the cylindrical acoustic generators developed by Sandia.[6] Only the linear analysis for sinusoidal forcing functions is presented; however, the conclusions of Chapter III regarding nonlinear effects and non-sinusoidal forcing functions also apply to the cylindrical case.

The idealized generator, shown schematically in Fig. 2, consists of a solid cylinder of radius R_s and height H and a concentric cylindrical membrane of radius $R > R_s$, height H, and negligible thickness. In the actual generator, the inner cylinder contains pistons which vary the enclosed volume (piston drive) or ports through which gas is alternately injected and exhausted (pneumatic drive).[6] A coordinate system is affixed to the generator with the origin located at the center and the z-axis coinciding with the axial line of symmetry, as shown in Fig. 2. For piston drive the gas volume V is given by

$$V = \pi R_o^2 H \left[\frac{R^2}{R_o^2} - \zeta^2 - (1 - \zeta^2) x(t) \right] \tag{4.1}$$

where R_o is the cylindrical membrane radius at equilibrium, x(t) is the fractional variation of the equilibrium volume $V_o = \pi R_o^2 H(1 - \zeta^2)$, and

$$\zeta = \frac{R_s}{R_o} \quad . \tag{4.2}$$

For pneumatic drive V is

$$V = \pi R_o^2 H \left(\frac{R^2}{R_o^2} - \zeta^2 \right) \tag{4.3}$$

and the gas mass M varies according to

$$M = M_o \left[1 + x(t) \right] \tag{4.4}$$

where x(t) is the fractional variation of the equilibrium gas mass M_o.

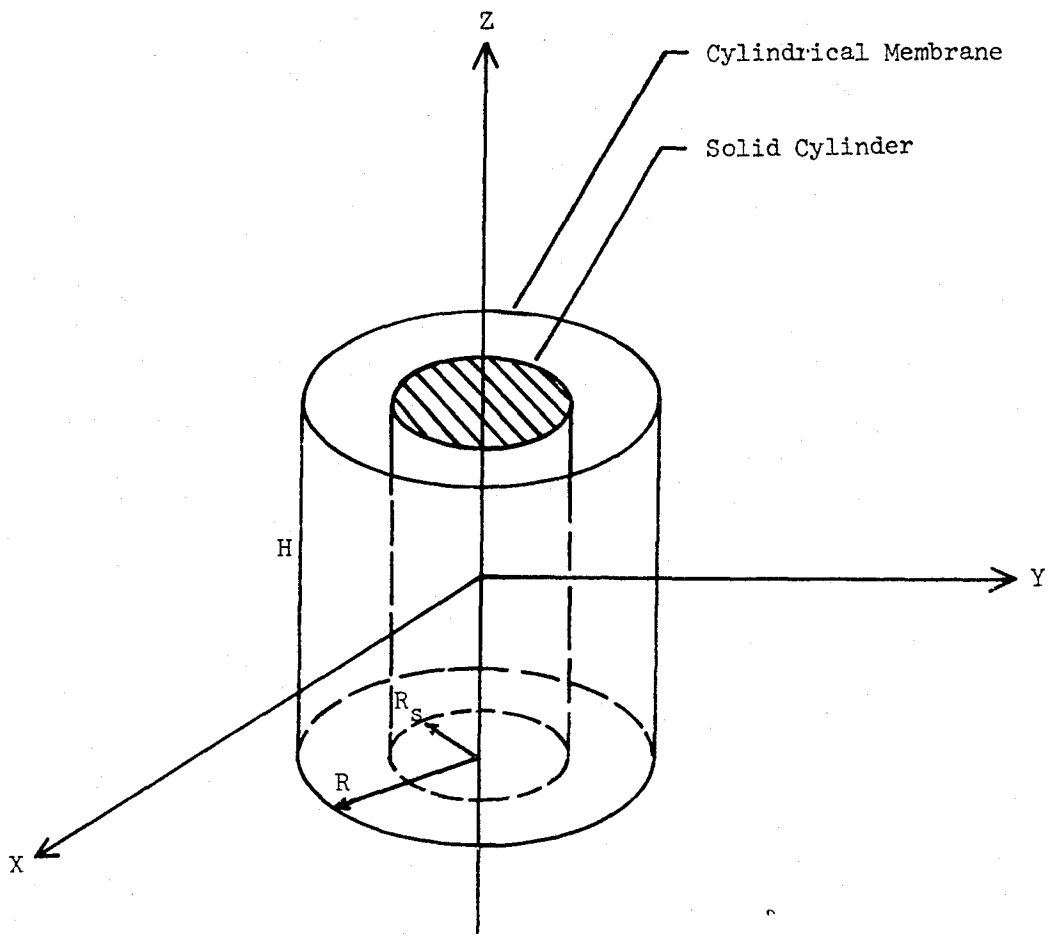

Figure 2. Idealized Acoustic Generator

Equation (2.1) is assumed to be the governing equation for the membrane radius R. However, it must be emphasized that, for a cylindrical bubble of height H, this equation is, in fact, invalidated by the lack of spherical symmetry (see Appendix). Nevertheless, it is conjectured that tangential pressure and velocity gradients may be weak enough that Eq. (2.1) is not an unreasonable approximation for the cylindrical bubble. Writing R(t) as

$$R(t) = R_o\left[1 + r(t)\right] \tag{4.5}$$

and employing Eqs. (2.6), (2.7), (2.10), (4.1), and (4.5) in Eq. (2.1), the linearized governing equation for r(t) is found by disregarding terms of $O(r^2)$:

$$\ddot{r} + \omega_o^2 \frac{R_o}{c}\dot{r} + \omega_o^2 r = K\gamma x + K\gamma \frac{R_o}{c}\dot{x} \tag{4.6}$$

where ω_o is the natural frequency of oscillation given by

$$\omega_o^2 = K(3\tilde{\gamma} + \alpha) \quad , \tag{4.7}$$

and

$$\tilde{\gamma} = \frac{2\gamma}{3(1 - \zeta^2)} \quad . \tag{4.8}$$

The quantities α and K are defined by Eqs. (2.9) and (3.7), respectively. Replacing Eq. (4.1) by Eqs. (4.3) and (4.4) also obtains Eq. (4.6), and Eq. (4.6)

therefore determines r(t) for both piston drive and pneumatic drive. For sinusoidal x(t) given by Eq. (3.16), Eq. (4.6) becomes

$$\ddot{r} + \omega_o^2 \frac{R_o}{c} \dot{r} + \omega_o^2 r = K\gamma x_o \cos(\omega t + \psi) \tag{4.9}$$

where ψ is given by Eq. (3.18). The steady state solution to Eq. (4.9) is

$$r = B \cos(\omega t + \varphi) \tag{4.10}$$

where

$$B = \frac{\gamma x_o}{3\tilde{\gamma} + \alpha} \left[\left(1 - \frac{\omega^2}{\omega_o^2}\right)^2 + \frac{\omega^2 R_o^2}{c^2} \right]^{-\frac{1}{2}} \tag{4.11}$$

and φ is given by Eq. (3.21).

Having determined the linear solution for R(t)

$$R(t) \approx R_o \left[1 + B \cos(\omega t + \varphi)\right] \quad , \tag{4.12}$$

consider the far field pressure variation produced by a cylindrical generator of finite dimensions located at the origin. Assuming that the cylindrical membrane radius can be roughly approximated by Eq. (4.12) over the whole length of the generator, the volumetric flow rate of water away from the generator is

$$Q = \frac{d}{dt}(\pi R^2 H) \approx -2\pi\omega B R_o^2 H \sin(\omega t + \varphi). \tag{4.13}$$

UNCLASSIFIED

Taking R and H to be small relative to the radiated wavelength $\lambda = 2\pi c/\omega$, the generator appears like a monopole source in the far field, and the far field pressure variation p is given by[12]

$$p \approx \frac{\rho_\infty}{4\pi s}\,\dot{Q}\left(t - \frac{s}{c}\right) = -\frac{\omega^2 B \rho_\infty R_o^{\,2} H}{2s}\cos\left(\omega t - \frac{st}{c} + \varphi\right) \tag{4.14}$$

where $s \gg \lambda$ is radial distance from the origin, and $\dot{Q}$ is evaluated at retarded time $(t - s/c)$ due to finite c. The average radiated sound intensity I at s is proportional to $\langle p^2 \rangle$, the mean square of p over one cycle,[13] such that

$$I = \frac{\langle p^2 \rangle}{\rho_\infty c} \approx \frac{\omega^4 B^2 \rho_\infty R_o^{\,4} H^2}{8 s^2 c} \tag{4.15}$$

The average radiated power Π is then given by

$$\Pi = 4\pi s^2 I \approx \frac{\pi \omega^4 B^2 \rho_\infty R_o^{\,4} H^2}{2c} \tag{4.16}$$

Referring to Eqs. (4.7) and (4.11), and using the equilibrium pressure balance

$$P_o = P_\infty + P_{mo} \tag{4.17}$$

which follows from Eq. (2.6), the maximum average radiated power Π_o occurs at $\omega = \omega_o$ and is given by

$$\Pi_o \approx \frac{\pi (P_\infty + P_{mo}) H^2 \gamma^2 x_o^{\,2} c}{2(3\tilde{\gamma} + \alpha)} \quad . \tag{4.18}$$

In the present analysis, two important quantities have been derived: the natural (i.e., resonant) frequency ω_o, given by Eq. (4.7), and the maximum power output Π_o, given by Eq. (4.18). Figure 3 presents a plot of computed and observed values of the natural frequency (in Hz), $\nu_o = \omega_o/2\pi$, vs ambient pressure P_∞ for the SEA piston-driven acoustic generator.[14] Figure 4 compares computed and observed values of Π_o vs P_∞ for the same device. No comparisons are made for the pneumatically driven device since its membrane has not yet been completely characterized.[15] The agreement between computed and observed values of ν_o is quite good. However, agreement between computed and observed values of Π_o is very poor, with observed values falling a factor of six or more below those computed. The primary source of error in Π_o lies in the assumption that the spherical bubble equation (2.1) is valid over the entire length of the cylinder. Other possible sources of error include non-sinusoidal forcing function x(t), end effects and interference in the near field due to non-spherical geometry, excitation of longitudinal and circular modes on the membrane, and dissipative effects in the membrane. At any rate, Eq. (4.7) can be used to determine the natural frequency fairly accurately, while Eq. (4.18) gives at best a qualitative estimate of maximum power output. The difference between the power output given by Eq. (4.18) and the numerical results[6,15] presented in Fig. 4 is due to nonlinear effects which decrease with increasing ambient pressure.[4]

As a final consideration, it is of interest to examine the relation between ω_o and deviations from cylindrical geometry. Restricting attention to axially and longitudinally symmetric deflections of the membrane, R is now defined to be the membrane radius $\tilde{R}(z,t)$ at z = 0, using the coordinate system in Fig. 2. This is expressed by

$$R(t) = \tilde{R}(0,t) \quad . \tag{4.19}$$

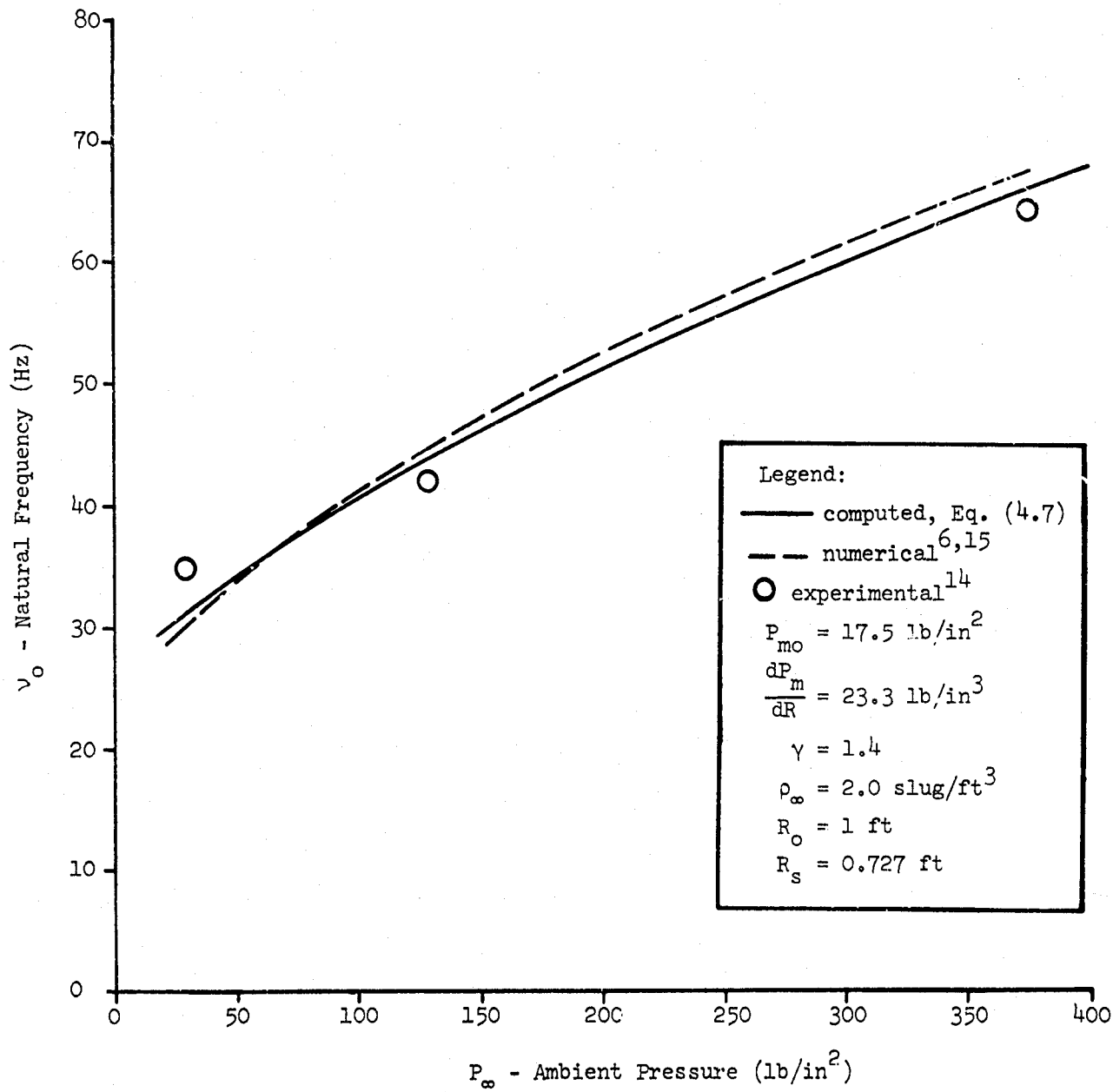

Figure 3. Natural Frequency vs. Ambient Pressure for the SEA Piston-Driven Acoustic Generator.

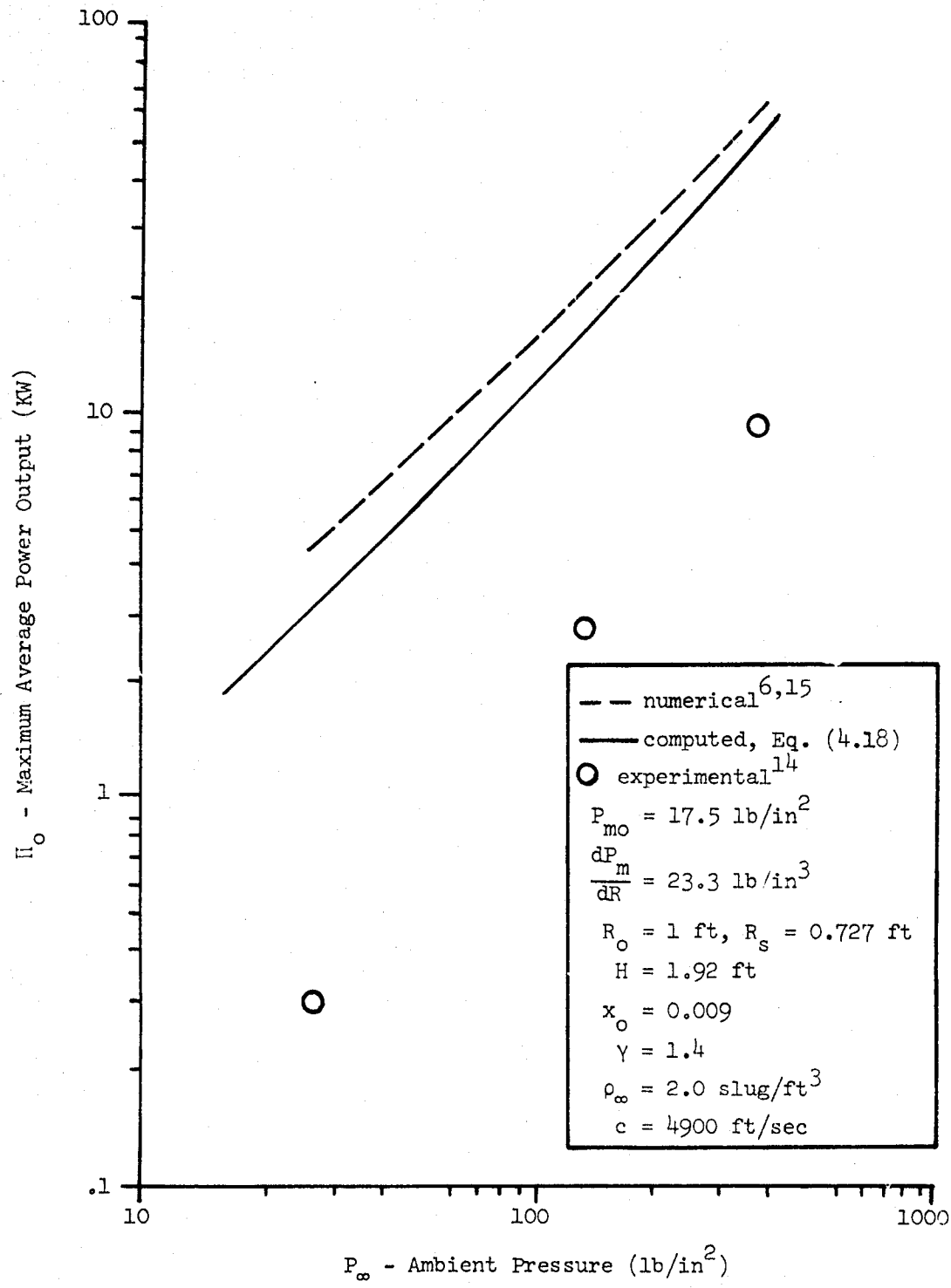

Figure 4. Maximum Average Power Output vs. Ambient Pressure for the SEA Piston-Driven Acoustic Generator.

For piston drive, the gas volume now becomes

$$V(t) = \pi \int_{-H/2}^{H/2} dz\left\{\tilde{R}^2(z,t) - R_s^{\,2} - \left[\tilde{R}_o^{\,2}(z) - R_s^{\,2}\right]x(t)\right\} \tag{4.20}$$

where $\tilde{R}_o(z)$ is $\tilde{R}$ at equilibrium. Expressing R(t) by Eq. (4.5) and applying the linear analysis, the governing equation for r(t) is Eq. (4.6) with ω_o given by

$$\omega_o^{\,2} = \frac{P_\infty + P_{mo}}{\rho_\infty R_o^{\,2}}\left[\frac{R_o\gamma}{V_o}\left(\frac{dV}{dR}\right)_{R=R_o} + \alpha\right] \tag{4.21}$$

where

$$V_o = \pi \int_{-H/2}^{H/2} dz\left[\tilde{R}_o^{\,2}(z) - R_s^{\,2}\right] \tag{4.22}$$

For deflections of the membrane proportional to cos $(\pi z/H)$ and $\cos^2(\pi z/H)$, computed values of ω_o for the SEA piston-driven generator are 15% to 30% lower than those observed experimentally.

V. Conclusion

The forced response of a spherical underwater bubble has been analyzed and extended to a cylindrical acoustic generator for piston drive and pneumatic drive. A method of determining nonlinear response has been outlined and the effect of nonlinearity shown to be the excitation of harmonics of the driving frequency. Furthermore, the relative contribution of nonlinearity is maximized when the driving frequency is half the natural frequency. Maximum acoustic power is radiated when the driving frequency is equal to the natural frequency, and good agreement is obtained between computed and experimentally observed natural

frequencies. On the other hand, experimentally observed radiated powers are less than computed values by at least a factor of six.

REFERENCES

1. Albers, V. M., Underwater Acoustics Handbook, Pensylvania State University Press, Lancaster, Pennsylvania, 1960, pp. 73-88.
2. Spitzer, L., "Acoustic Properties of Gas Bubbles in a Liquid," Report No. 6.1-SR-20-918, National Defense Research Committee, July 1943.
3. Zwick, S. A., "Behavior of Small Permanent Gas Bubbles in a Liquid," Journal of Mathematics and Physics, Vol. 37, 1958, pp. 246-268.
4. Bernard, R. S., "The Acoustic Response of a Spherical Bubble," Report No. SC-RR-72 0643, Sandia Laboratories, Albuquerque, New Mexico, Oct. 1972.
5. Norwood, F. R., and Bernard, R. S., "The Response of a Spherical Bubble to a Plane Pressure Wave," Report No. SC-TM-72 0707, Sandia Laboratories, Albuquerque, New Mexico, Oct. 1972.
6. Marshall, B. W., "Numerical Analysis of an Oscillating Underwater Gas Bubble," Report No. SC-DR-72 0644, Sandia Laboratories, Albuquerque, New Mexico, November 1972. (SNSI)
7. Herring, C., "Theory of the Pulsations of the Gas Bubble Produced by an Underwater Explosion," Report No. C4-sr-20-010, Columbia Division of National Defense Research, Oct. 1941.
8. Cole, R. H., Underwater Explosions, Dover Publications, New York, 1965, pp. 305-307.

9. Lamb, H., Hydrodynamics, Dover Publications, New York, 1945, p. 122.

10. Schiff, L. I., Quantum Mechanics, Third Edition, McGraw-Hill, New York, 1968, p. 245.

11. Minorsky, N., Nonlinear Oscillations, Van Nostrand, Inc., Princeton, New Jersey, 1962, pp. 460-464.

12. Morse, P. M., and Ingard, K. U., Theoretical Acoustics, McGraw-Hill, New York, 1968, pp. 309-312.

13. Urick, R. J., Principles of Underwater Sound for Engineers, McGraw-Hill, New York, 1967, pp. 12-15.

14. Hardee, H. C., et al., "Underwater Acoustic Source Test Report," SC-DR-71 0895, Sandia Laboratories, Albuquerque, New Mexico, to be published. (SNSI)

15. Marshall, B. W., "Results of Experiments with a Pneumatically Driven Acoustic Source,"(U) SC-DR-72 0792, Sandia Laboratories, Albuquerque, New Mexico, to be published. (SNSI)

16. Hardee, H. C., Lee, D. O., and McCoy, D. L., "Low-Frequency Underwater Sound Generation by Membranes with Small-Amplitude Oscillations," (U) SC-RR-70-920, Sandia Laboratories, Albuquerque, New Mexico, March 1971. (SDI)

INTENTIONALLY LEFT BLANK

APPENDIX

INTENTIONALLY LEFT BLANK

Appendix

Cole[8] derives the radial equation of motion for a spherical bubble (2.1) from the spherically symmetric equations of continuity and momentum, given respectively in spherical coordinates (r, θ, φ) by

$$\frac{\partial \rho}{\partial t} + \frac{1}{r^2}\frac{\partial}{\partial r}(\rho r^2 u) = 0 \tag{A.1}$$

$$\frac{\partial u}{\partial t} + u\frac{\partial u}{\partial r} = -\frac{1}{\rho}\frac{\partial P}{\partial r} \tag{A.2}$$

where ρ is fluid density, t is time, u is radial fluid velocity, and P is fluid pressure. Equation (2.1) is obtained by combining an approximate form of Eq. (A.1) with Eq. (A.2) and integrating the result from the bubble surface $r = R(t)$ to $r = \infty$. The important point is that Eq. (2.1) is valid only when Eqs. (A.1) and (A.2) are valid in the surrounding fluid.

Now consider an axially symmetric bubble centered at the origin and symmetric about $\theta = \pi/2$. The bubble surface is given by $R(\theta,t)$ and the flow field of the surrounding fluid must be independent of φ and symmetric about $\theta = \pi/2$. Accordingly, the continuity equation and the r- and θ-components of the momentum equation are given respectively by

$$\frac{\partial \rho}{\partial t} + \frac{1}{r^2}\frac{\partial}{\partial r}(\rho r^2 u) + \frac{1}{r \sin\theta}\frac{\partial}{\partial \theta}(\rho v \sin\theta) = 0 \tag{A.3}$$

$$\frac{\partial u}{\partial t} + u\frac{\partial u}{\partial r} + \frac{v}{r}\frac{\partial u}{\partial \theta} - \frac{v^2}{r} = -\frac{1}{\rho}\frac{\partial P}{\partial r} \tag{A.4}$$

$$\frac{\partial v}{\partial t} + u\frac{\partial v}{\partial r} + \frac{v}{r}\frac{\partial v}{\partial \theta} + \frac{uv}{r} = -\frac{1}{\rho r}\frac{\partial P}{\partial \theta} \tag{A.5}$$

where v is the θ-component of velocity, and the φ-component of velocity w is taken to be zero. From the requirement of symmetry about $\theta = \pi/2$ it follows that

$$v = \frac{\partial u}{\partial \theta} = \frac{\partial \rho}{\partial \theta} = \frac{\partial P}{\partial \theta} = 0 \quad @ \quad \theta = \frac{\pi}{2} \quad . \tag{A.6}$$

But v is anti-symmetric about $\theta = \pi/2$, thus

$$\frac{\partial v}{\partial \theta} \neq 0 \quad @ \quad \theta = \frac{\pi}{2} \quad . \tag{A.7}$$

The lack of spherical symmetry is apparent everywhere, even in the plane of symmetry. In order to obtain an equation analogous to Eq. (2.1) for a cylindrical bubble, one must integrate an appropriate combination of Eqs. (A.3)-(A.5) with respect to r from the bubble surface to $r = \infty$. The resulting equation would necessarily have an explicit dependence on θ everywhere on the bubble surface. However, the θ-dependence in Eqs. (A.3)-(A.5) makes the task extremely complicated if not impossible, and no such attempt is made here.

[redacted]

DISTRIBUTION

1/53A - D. B. Shuster, 1200
2/53A - W. C. Myre, 1210
3/53A - P. F. Jones, 1211
4/53A - E. G. Kadlec, 1211
5/53A - W. A. Gardner, 1500
6/53A - T. B. Lane, 1540
7/53A - B. E. Bader, 1543
8/53A - R. T. Othmer, 1544
9/53A - T. M. Burford, 1700
10/53A - R. G. Clem, 1730
11/53A - W. F. Roherty, 1731
12/53A - A. M. Clogston, 5000
13/53A - A. Narath, 50
14/53A - O. E. Jones, 5100
15/53A - L. C. Hebel, 5200
16/53A - J. E.McDonald, 5300
17/53A - L. E. Hollingsworth, 5400
18/53A - L. M. Berry, 5500
19/53A - A. Y. Pope, 5600
20/53A - R. C. Maydew, 5620
21/53A - K. J. Touryan, 5640
22/53A - R. A. Hill, 5642
23/53A - F. G. Blottner, 5643
24/53A - W. S. Saric, 5643
25/53A - J. K. Cole, 5644
26-28/53A - R. S. Bernard, 5644
29/53A - B. W. Marshall, 5644
30/53A - C. W. Peterson, 5645
31/53A - L. Gutierrez, 8100
32/53A - J. F. Barham, Jr., 8130
33/53A - B. F. Murphey, 8300
34/53A - A. N. Blackwell, 8350
35/53A - SLL Library, 8232-2
36-50/53A - Central Files, 3148-2
51/53A - L. C. Baldwin, 3152
52-53/53A - R. S. Gillespie, 3151

[redacted]

INTENTIONALLY LEFT BLANK