[redacted] UNCLASSIFIED

SANDIA SYSTEMATIC DECLASSIFICATION REVIEW	
1st Review Date: 1-30-96 Authority: ☐ ADC ☒ ADD Name: W Harper 2nd Review Date: 1-31-96 Authority: ADD Name: K. D. Smith	Determination (Circle Numbers): 1. Classification Retained (2.) Classification Changed to: U 3. Contains No DOE Classified Information 4. Coordinate With: 5. Contains UCNI? 6. Comments:

SC-DR-64-1654

TEST PLAN FOR THE TX-61 WEAPON TEST 100-10 (Title Unclassified)

R. D. Lindsey, 1513
Sandia Laboratory, Albuquerque

SANDIA SYSTEMATIC DECLASSIFICATION REVIEW DOWNGRADING OR DECLASSIFICATION STAMP	
CLASSIFICATION CHANGED TO: U Emilda Serpa 05/20/96 PERSON CHANGING MARKING & DATE Carmela Dallas 5/20/96 PERSON VERIFYING MARKING & DATE	AUTHORITY: K. D. Smith RECORD ID: 96SN033 DATED: 01-31-96

November 1964

Approved by: James W. Jones
J. W. Jones, 1510

ABSTRACT (U)

This report presents the proposed test plan for a free-fall test drop in the TX-61 weapon development program. Results of the test will be published as a supplement to this document.

[redacted]

[redacted]

[redacted] UNCLASSIFIED

UNCLASSIFIED

[redacted]

DISTRIBUTION:
Hq. FC/DASA, Sandia Base,
Attn: Adj. Gen., for Lt. Col. R. K. Wright FC/DD-3
J. M. Wiesen, 1440
C. L. Carpenter, 1513 (2)
S. A. Moore, 1540
R. W. Devore, 2110
H. E. Viney, 7210
G. E. Hansche, 7240
A. Y. Pope, 7420
B. R. Allen, 3421
M. G. Randle, 3428-1, Bldg. 836
M. G. Randle, 3428-1, Bldg. 880
E. A. Paxton, 8232-1
W. F. Carstens, 3410, Attn: Div. 3412
R. C. Smelich, 3427-3 (5)

REPRODUCTION PERMISSION

This report is not to be reproduced, in whole or in part, without permission by the manager of the originating department.

[redacted]

UNCLASSIFIED

[redacted]

TABLE OF CONTENTS

	Page
Introduction	4
Test Objectives	4
Description of Test Vehicle	5
Instrumentation	6
Checkout Procedure	7
Data Format	8

[redacted]

[redacted]

TEST PLAN FOR THE TX-61 WEAPON TEST 100-10

Introduction

This test plan covers a free-fall drop in the TX-61 weapon program intended especially to test stability in a unit employing spin rockets and canted fins.

The drop will be made on the dry lake target of the Tonopah Test Range under the following conditions:

Drop No. - 100-10

Carrier - F4C or F4B

Ejection velocity - 8 to 15 fps

Altitude - 57,000 ft MSL (min)

Attitude - level

Speed - Mach 1.8 (min)

A parachute will be deployed approximately 59 seconds after release to permit recovery of the test vehicle.

Test Objectives

The purposes of this test are:

1. To determine the stability and rate of spin of the unit during free fall, with regard especially to aerodynamic coupling when spin rockets are employed and with fins canted 0°45' for clockwise rotation.

2. To determine trajectory.

[redacted]

[redacted]

Description of Test Vehicle

The total length of the unit is 141 inches, and its weight is approximately 600 pounds. The nose is the early two-piece type containing honeycomb.

The center case is the steel ballistic type shown in Figure 1. An additional weight is added at its forward end to simulate proper weight distribution. The telemetry package is mounted in the rear portion of the center case. To the rear of the telemetry package a bulkhead is mounted to provide connector mountings between the telemetry package and the preflight section. An MC982 pullout switch is mounted at Station 32.5 on the vertical centerline.

The preflight section is of the latest design and includes an XMC1951 spin rocket to produce a roll frequency of about 5 revolutions per second.

The afterbody is of the latest design and includes a standard parachute installation, an XMC1835 gas generator, and a pulse initiator. The fins are modified to provide a fin cant of 45 ± 5 minutes.

The electrical system is shown in Figure 2; it includes the components required to fire the spin rocket and to deploy the parachute. A special pulse initiator provides delayed ignition power to the rockets. An MC1356 escapement timer, operated through an MC982 pullout switch, provides delayed power to the XMC1835 gas generator which deploys the parachute. A universal junction box interconnects the firing circuits and the telemetry. The two firing circuits are independent in the sense that the power used to fire the spin rockets comes from the aircraft, while the power used to fire the gas generator for parachute deployment comes from the telemetry.

The following are the explosive components used: (1) an XMC1951 spin rocket containing 150 mg normal lead styphanate, 2.08 gm boron potassium nitrate, and 1.8 pounds of polysulfide-ammonium-perchlorate, and (2) an XMC1835 gas generator containing 335 mg basic lead styphanate, 1.5 g boron potassium nitrate, and 110 g IMR 4350.

[redacted]

[redacted]

Instrumentation

Data will be collected by the customary methods--camera coverage and radio-frequency FM/FM telemetry link with ground stations.

Camera coverage is required to obtain data on:

1. Aircraft separation
2. Trajectory
3. Documentary.

This coverage will be provided by cameras located on the aircraft and on the ground. Continuous optical coverage of the trajectory is required from release to impact or near impact, with the impact point to be surveyed.

A 16-mm print of trajectory and aircraft separation will be delivered to Division 1513 within 5 days of the test. Still photographs of the unit installed on the aircraft, showing the pullout area, clearances with aircraft structure, and any other pertinent details will be sent to Division 1513 within 10 days of the test.

Telemetry information is required on the following characteristics:

1. Roll: continuous. A frequency response of 20 cps is required.
2. Yaw: ±85 degrees. A frequency response of 20 cps is required.
3. Pitch: +45, -115 degrees. A frequency response of 20 cps is required.
4. Ejection velocity: 0-15 fps. A frequency response of 100 cps is required.
5. Fire signals 1 and 2: 0-28 volts. A 28-volt decaying exponential will appear on the telemetry when each of the two fire signals is provided to the rocket ignitor. A frequency response of 100 cps is required.

[redacted]

UNCLASSIFIED

[redacted]

6. Arm monitor: 0-28 volts. This channel monitors the voltage used to fire the spin rocket. A frequency response of 50 cps is required.

7. Longitudinal acceleration: -20, +300 g's. A frequency response of 50 cps is required.

8. Timer operation: 0-28 volts. A 28-volt step will appear on the telemetry about 25 seconds after release. A frequency response of 20 cps is required.

9. Deployment fire signal: 0-28 volts. A 28-volt step will appear on the telemetry about 58 seconds after release. A frequency response of 20 cps is required.

10. Solar cell: 0-5 volts. A solar cell mounted at Station 34.5 will indicate roll rate. A frequency response of 20 cps is required.

Checkout Procedure

A complete electrical check of the unit will be conducted jointly by personnel from Divisions 7213 and 7215 prior to assembly. After assembly, the weight, center of gravity, and moments of inertia will be determined; and a check of the dynamic balance will be made. The telemetry will then be checked and the unit shipped to Area III, Building 6620. The XMC1951 spin rocket and XMC1835 gas generator will be installed in Building 6620 in accordance with approved safety procedures.

Prior to takeoff the telemetry system and the arming-safing portion of the rocket firing and chute deployment system will again be checked. The telemetry will be operated on aircraft power by turning the AMAC system to the SAFE position far enough in advance of drop time to permit a check of the various signals. The telemetry system will then be switched to internal power by turning the AMAC system to the GND position, at which time the various signals will once more be checked. At the same time the AMAC warning light will give an indication that the rocket firing and chute deployment systems are armed. If the telemetry signals or the AMAC indications are not satisfactory, the test will be canceled.

[redacted]

UNCLASSIFIED

[redacted]

Data Format

Optical Data

The following data, with respect to time, are required in tabular form. A frame-by-frame reading is desired. Smoothed data with 3-point velocity computation is desired in these categories:

1. Altitude (ft)
2. Range (ft)
3. Drift (ft)
4. Trajectory angle with respect to air (deg)
5. Total velocity with respect to air (fps)
6. x, y, and z components of velocity with respect to air (fps)
7. Mach number
8. x and y components of wind (fps)
9. Dynamic pressure (lb/ft^2)
10. Speed of sound (fps)
11. Air density (lb/ft^3)
12. Ambient pressure (in. Hg)
13. Calibrated air speed (knots)
14. Drag coefficient
15. Acceleration (g)

Telemetry Data

An annotated oscillograph record is desired of the drop from 10 seconds before release to impact. A record speed of 1 inch per second is desired. The following signals, deflections, and notations are desired:

[redacted]

1. Ejection velocity: maximum deflection. Peak value noted.

2. Fire signals 1 and 2: maximum deflection. Rocket firing time noted.

3. Arm monitor: maximum deflection. Voltage to be noted every 5 seconds to release and at release.

4. Roll: maximum deflection or 2 inches, whichever is less. Peak values noted.

5. Yaw: maximum deflection or 2 inches, whichever is less. Peak values noted.

6. Pitch: maximum deflection or 2 inches, whichever is less. Peak values noted.

7. Longitudinal acceleration: maximum deflection. Peak acceleration noted.

8. Timer operation: maximum deflection. Time of operation noted.

9. Deployment fire signal: maximum deflection. Time of fire signal noted.

10. Solar cell: maximum deflection. Peak values noted.

A preliminary short record of the above is to be delivered to both Divisions 1513 and 7424 within 2 days after the test.

In addition to the annotated oscillograph records, it is requested that graphs of the following be made:

1. C_D versus Mach number

2. Total velocity and dynamic pressure versus time

3. Mach number versus time

4. Altitude versus time and range

5. Vertical velocity versus time from releases (ejection)

6. Roll rate versus time from release

A preliminary test report containing test conditions and preliminary test results is to be delivered to Division 1513 within 10 days of the test.

Units, Scale, and Range

Data Format	SDEP-117 Add. C 5/24/63 Page		Abscissa	Remarks
Drag coefficient	13	Mach No. 0.1/2 cm Mach 1 to 2	CD 0.1/5 cm 0.3 to 0.5	
Total velocity and dynamic pressure versus time	16	a. Dynamic pressure 200 lb/ft^2/cm b. Total velocity 50 ft/sec/cm	Time 2 sec/cm	Double plot
Speed	18	Mach No. 0.1/cm	Time 2 sec/cm	
Trajectory	19	Altitude 2500 ft/cm	a. Time 2 sec/cm b. Range 2500 ft/cm	Double plot
Ejection velocity	-	Vertical velocity 2 fps/cm; 0 to 20	Time from release 0 to 170 10 millisec/cm	
Roll rate	-	0.5 rps/cm 0 to 10 rps	Time from release 2 sec/cm 0 to 70 sec	

UNCLASSIFIED

UNCLASSIFIED

[redacted]

Data Distribution for 100-10

	W. V. Hereford, 7215	W. H. Curry, 7424	D. M. Bruce, 1542	C. L. Carpenter, 1513	APGC (PGWRB) Attn: Chief Bomb Ballistics Division For: Marjorie Field Eglin Air Force Base, Fla.	Naval Weapons Lab. Dahlgren, Va.	Hdqrs FC/DASA: Attn: Adj. Gen. For: Lt. Col. R. K. Wright, FCDD3
Preliminary Test Report	x	x		x			x
Data Reduction Report	x	x	x	x	x	x	
Plots: Roll Rate versus Time	x	x		*			
Mach Number versus Time	x	x		*			
Total Velocity and Dynamic Pressure	x	x		*			
Trajectory	x	x		*			
Ejection Velocity	x	x	x	*	x	x	
Drag Coefficient versus Mach Number	x	x		*			
Annotated Records:							
Gyros	x	x		x	x	x	
Electrical Data	x	x		x			
Ejection Acceleration	x	x		x	x	x	
Roll	x	x		x	x	x	
Longitudinal Accel.	x	x	x	x			
Film: Documentary	x	x		x	x	x	
Aircraft	x	x		x	x	x	
Stills: Documentary	x			x			

*Copy plus reproducible

[redacted]

[redacted]

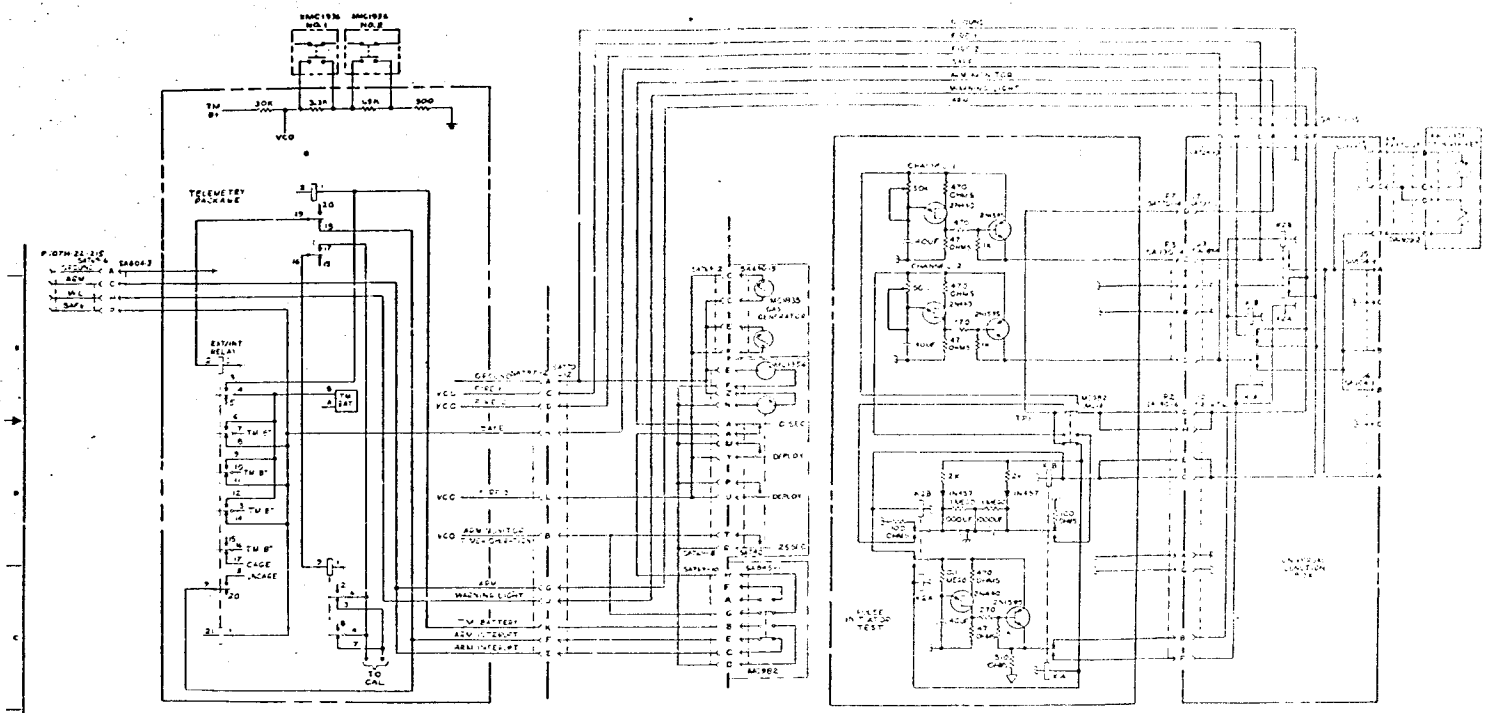

[redacted]

UNCLASSIFIED	SCHEMATIC DIAGRAM	E1
		CKN79752

CKN79752

UNCLASSIFIED

[redacted]

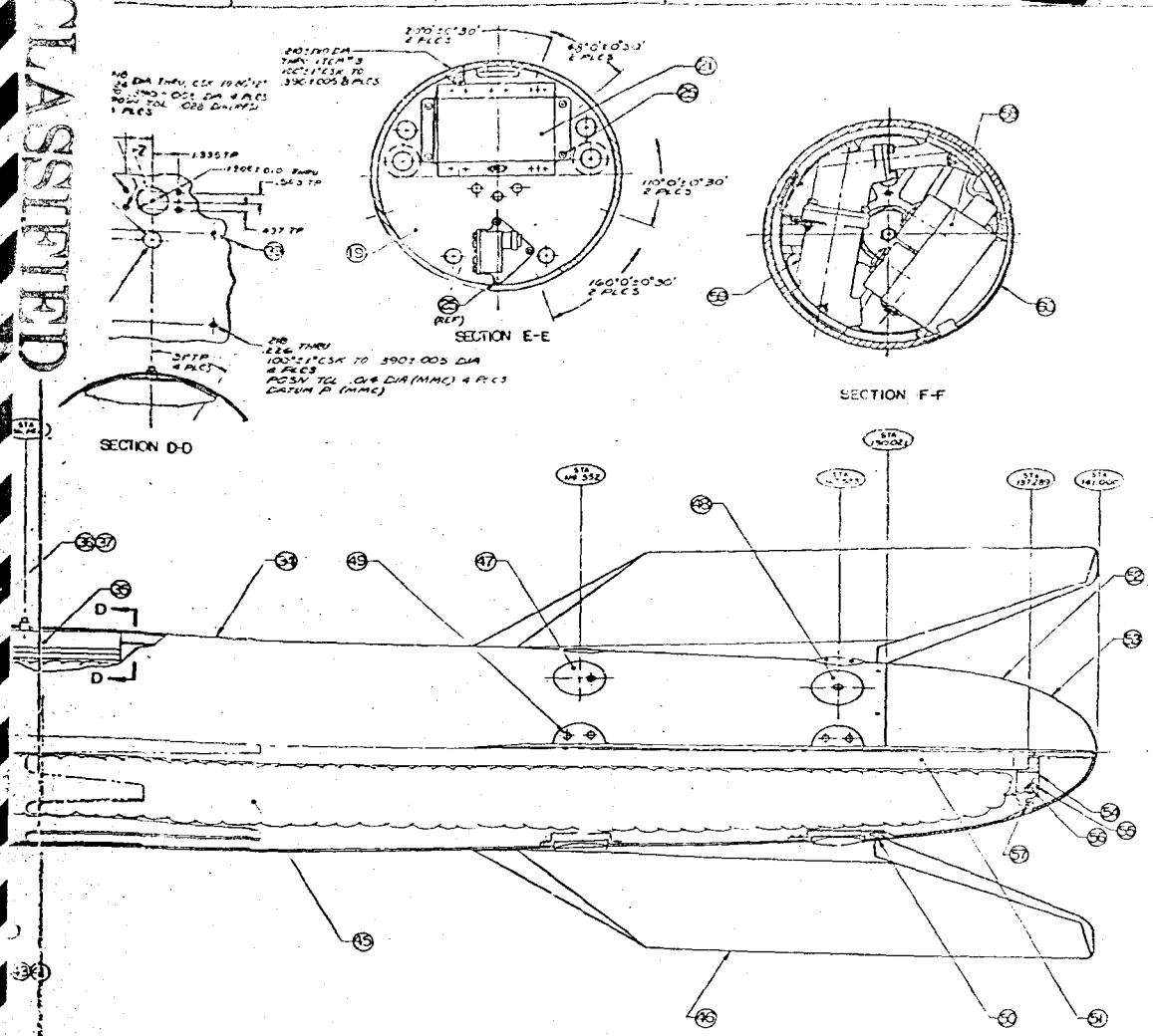

Figure 1

[redacted]

DR. NO. N79512
ISS. 1 SHT. 1
FR. 1 OF 3
CLASS UNC

N79512

FREE FALL GTD
100-9

UNCLASSIFIED

[redacted]

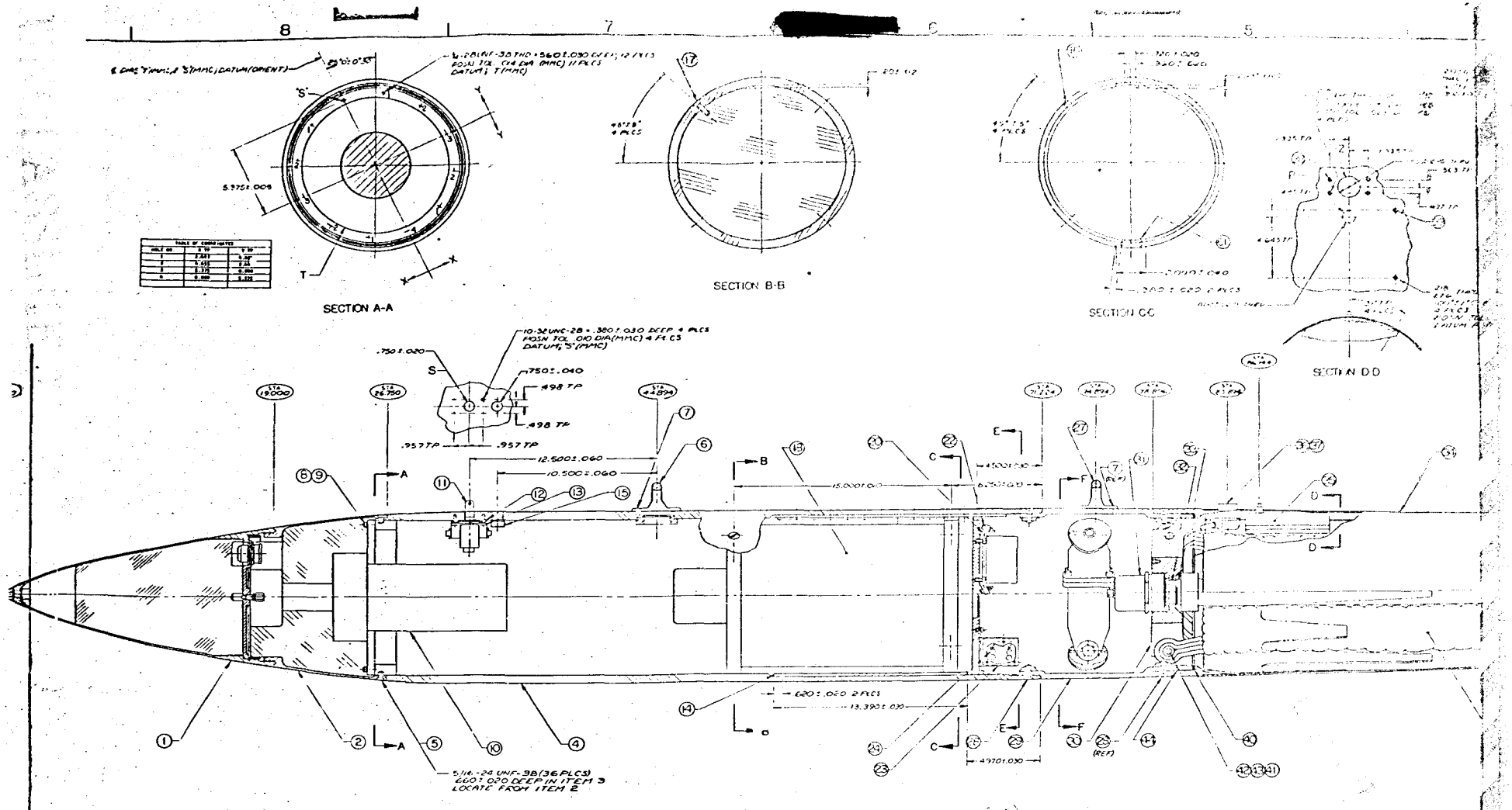

DR. NO. N79512
ISS. 1 SHT. 1
FR. 2 OF 3
CLASS UNC.

[redacted]

[redacted] [redacted]

UNCLASSIFIED

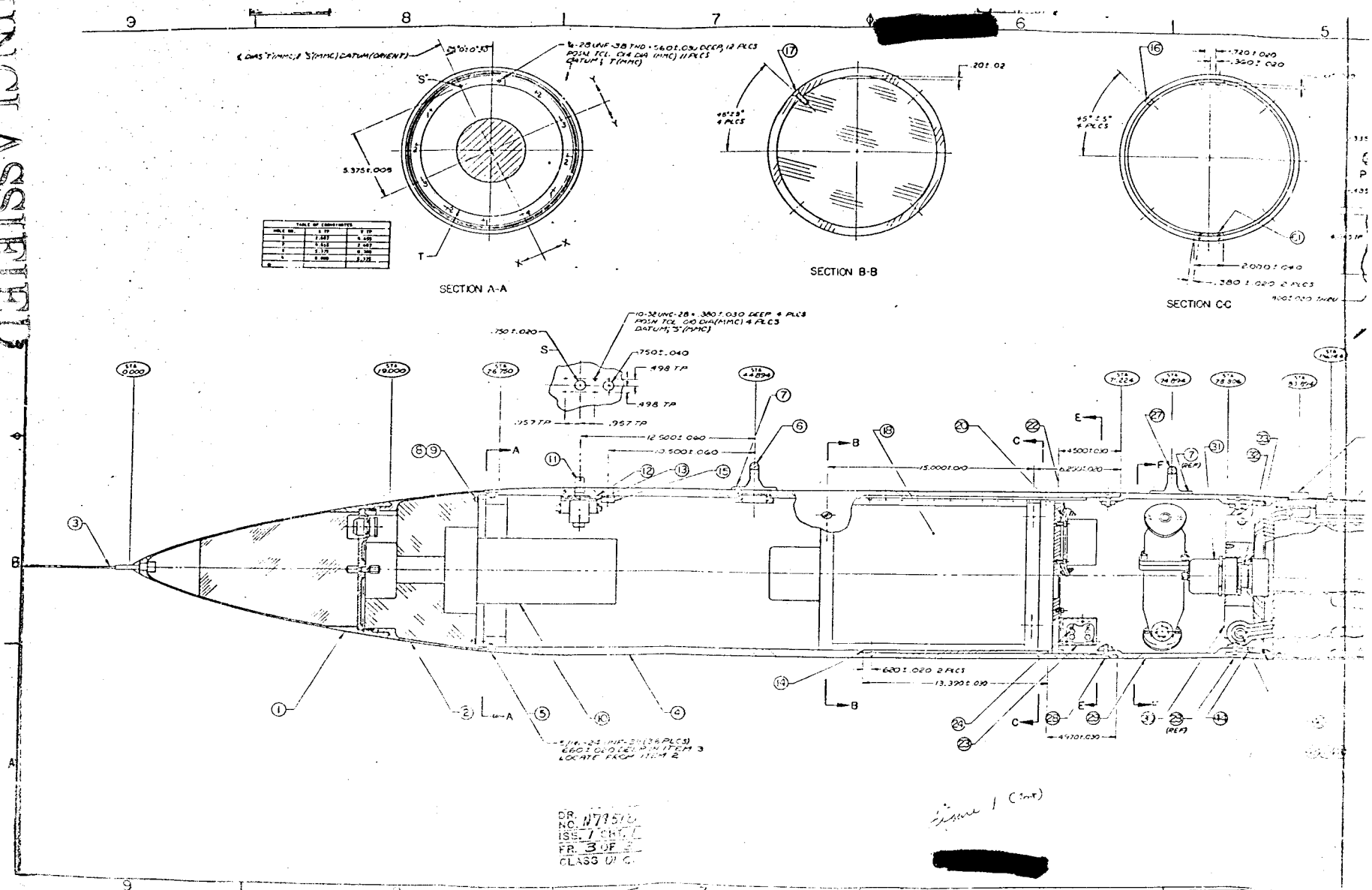

Figure 1 (Cont)

[redacted]