707730

A-00136

Human Subjects Project

Health Physics Pergamon Press 1958. Vol. 1. pp. 276–281. Printed in Northern Ireland

APPLICATIONS OF AN ANALOG COMPUTER TO ANALYSIS OF DISTRIBUTION AND EXCRETION DATA*

B. R. FISH

Health Physics Division, Oak Ridge National Laboratory,†
Oak Ridge, Tennessee

(*Received* 11 *June* 1958)

Abstract—The work of the ORNL Health Physics Division in studying various mathematical models for the distribution and excretion of uranium following intravenous injection has been greatly facilitated by the use of an electronic analog computer. A four compartment linear model appeared to be adequate to explain data obtained from male rats and low-dose level human data. However, to simulate human excretion following injection at higher dose levels, it was necessary to superimpose a saturable excretion pathway upon the linear model. A prime object of the model work has been the derivation of some means whereby field measurements of excretion may be related to internal dose. That object has been realized in the inverse model by comparing the model output with the excretion data to obtain an error function which is used to drive the model.

INTRODUCTION

It is often necessary for the health physicist to design experiments or equipment, to analyze data, or to demonstrate the action of a device. The ease with which one may accomplish those functions through the use of an electronic analog computer has shown that instrument to be a very powerful tool.

There are many types of analog computers. They might be characterized as mechanical, optical, hydraulic, electronic or as is usually the case, a combination of these forms. Examples of mechanical analog computers include the slide rule and the automobile speedometer. The count rate circuits of radiation survey meters are fine examples of electronic analog computers. Since the electronic form appears to be by far the most flexible, these remarks shall be confined to that particular category of analog devices.

Fig. 1 shows schematically some of the basic circuit elements of which an electronic analog computer may be constructed. Voltages are commonly used to represent the variables. In addition to the units shown here there are many circuits which may be used for nonlinear operations such as limiting, sticking, dead space and transport lag.

In the case of many commercially available computers the problem may be wired on a removable patch panel before it is placed on the machine. The necessary computer components are interconnected on the panel by means of special plugs and jumper cords. Any desired change in the wiring may be made as the need becomes apparent.

As for the question of accuracy of an analog computer, one must remember that the components do not have ideal characteristics. In general, it is difficult to give a quantitative estimate of accuracy before running a problem that is at all complicated. However, practical experience has shown that when a problem is set up with due consideration being given to the choice of alternate means of arranging the various operations, it is usually possible to obtain solutions which deviate from the true solutions anywhere from 0.1 to about 10 per cent, depending upon the problem. Detailed means for evaluating the errors involved in a

* Revision of a paper presented at the Health Physics Society Meeting, University of Pittsburgh, Pennsylvania, 17–19 June, 1957.

† Operated for the U.S. Atomic Energy Commission by Union Carbide Corporation.

REPOSITORY Oak Ridge Energy Systems
COLLECTION
BOX No.
FOLDER

1026357

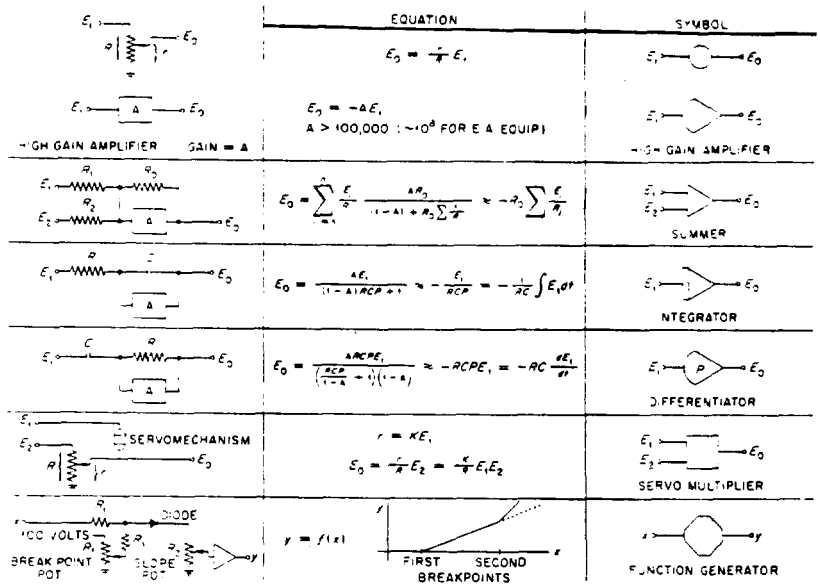

FIG. 1. Basic components of an electronic analog computer.

particular problem are outlined in the general references below. One should first learn where to expect the large sources of error to occur and try to avoid them, of course, but keeping in mind that ultra-accuracy is not the primary objective in the use of analog computers.

Four compartment linear system

The work on a model for the distribution and excretion of hexavalent uranium will serve to illustrate how an analog computer may be applied to a practical problem. Fig. 2 shows the four compartment model that has been discussed in detail by BERNARD.[1] Briefly, an initial injection is made into the blood compartment. The amount, S_1, in the blood is given up at a rate of $\lambda_1 S_1$. A fraction, f, goes to the bone. Of the amount that does not go to the bone the fraction, ϕ_1, is held up in the kidney, and the remainder is transferred directly from the blood to urine via kidney with negligible delay. The performance equations are linear and are not difficult to solve analytically. However, a great deal of speed and flexibility are obtained by simulating the system on the analog computer. For example, this version of the model may be set up on the computer in ten minutes and separate runs need take only 3–5 min.

The S_1 integrator (Fig. 2) starts out with positive 100 V which represents 100 per cent of the injected dose. As the run progresses the output of the first integrator is $-S_1$ and the output of the λ_1 pot is $-\lambda_1 S_1$ which is added along with $+\lambda_2 S_2$ into the S_1 integrator input so that their sum is the time rate of change of S_1 as the first equation prescribes. Of the quantity, $-\lambda_1 S_1$, a fraction, f, goes to the bone.

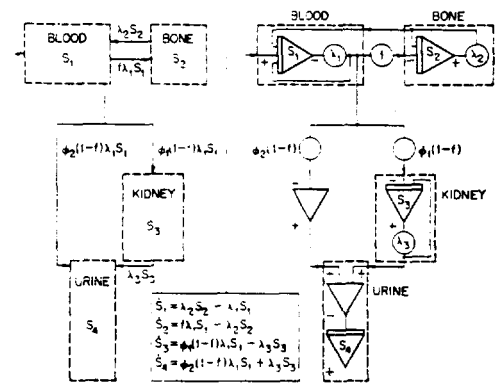

FIG. 2. Three compartment model compared with the related computer analog.

1026358

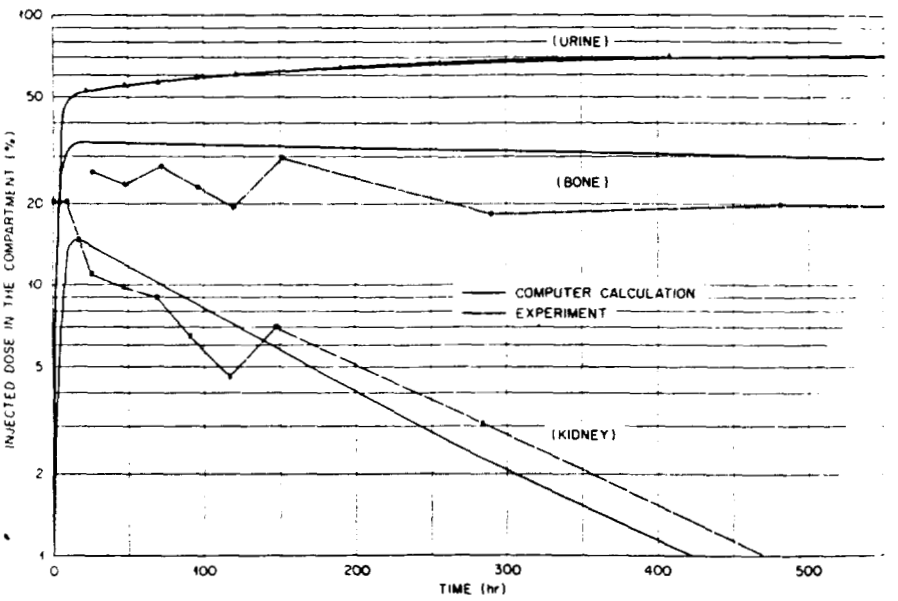

FIG. 3. Three compartment model solution for the male rat data of W. F. NEUMAN.

A similar description applies to the dynamic action of the bone and kidney compartments. If, as is commonly the case, the natural time constant of the basic integrator is 1 sec, setting the λ-pots to the numerical values of the decay constants in terms of hours produces a time scale factor such that one second machine time is equivalent to 1 hr real time. To obtain the dynamic response of any compartment in terms of percent of the injected dose it is only necessary to record the output voltage of that compartment.

Fig. 3 shows the results of applying the four compartment model to the data obtained by NEUMAN[2] in a study of the distribution and excretion of uranium in rats. A time scale relating 1 sec on the machine to 5 hr real time was used, such that the data for Fig. 3 required less than 2 min operating time. It should be emphasized that the decay constants and the distribution percentages used in the computer setup were derived from the urine curve alone. The solid curves represent the compartment contents predicted by the computer results.

Table 1 will serve to compare the parameters, for the four compartment model, derived from the rat data with those obtained from the excretion results of a study made by BASSETT[3] at the University of Rochester using low dose level intravenous injections of hexavalent uranium in six human subjects. It may be seen that except for a longer kidney half-life the rat parameters are little different from those of the human subjects.

Table 1. Calculated values of the model parameters

	λ_1 (hr^{-1})	λ_2 (hr^{-1})	λ_3 (hr^{-1})	$-f$	$\phi_1(1-f)$	ϕ_2 [illegible]
Rats	0.221	0.00037	0.0045	0.315	0.095	[illegible]
Rochester patients	0.407	0.00028	0.084	0.225	0.145	[illegible]

1026359

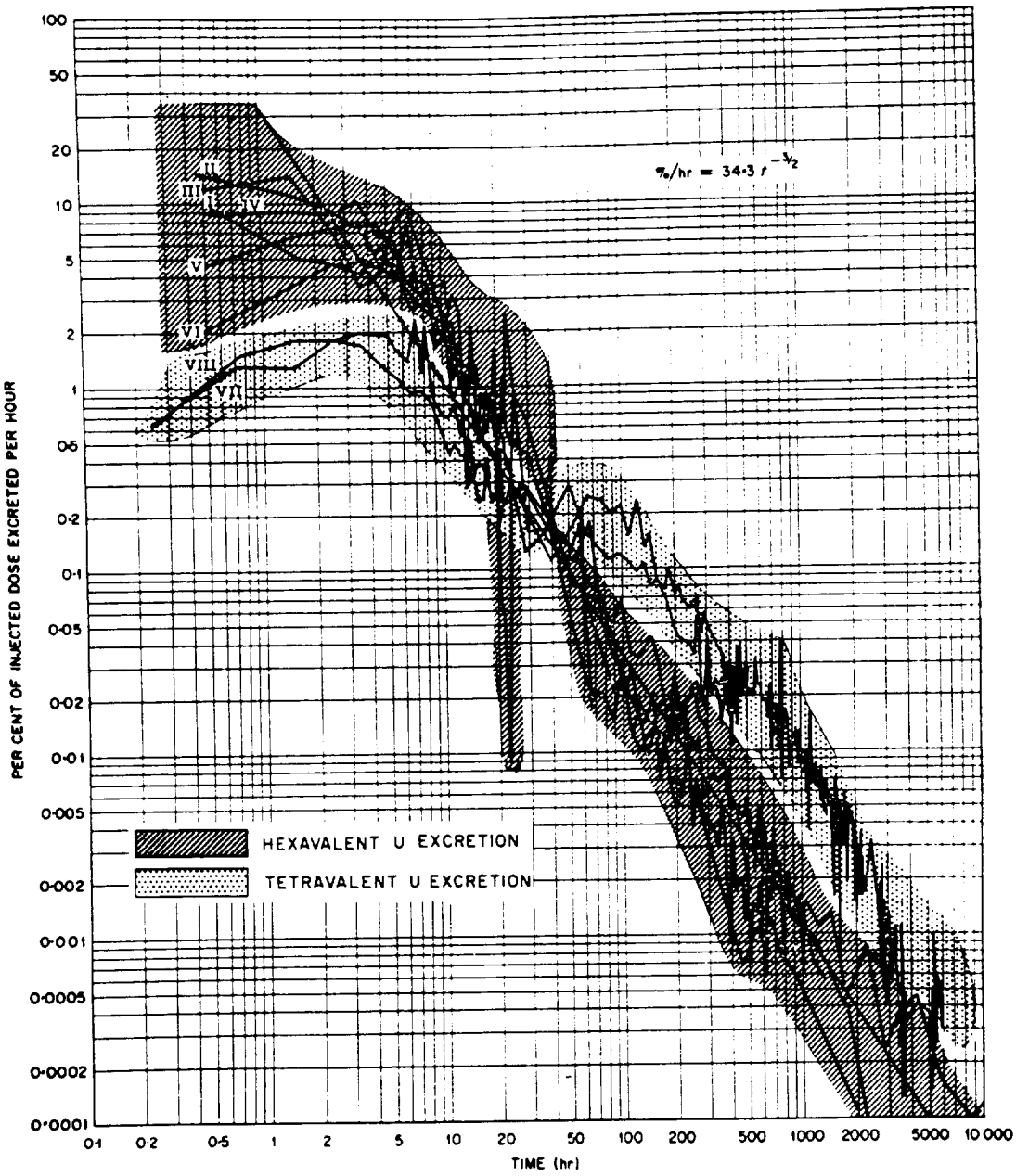

FIG. 4. Urinary rate of excretion for eight terminal brain tumour patients following intravenous injection (S. R. BERNARD and E. G. STRUXNESS).

Gravimetric dose dependence

Fig. 4 shows the excretion results of eight terminal brain tumor patients; the first six were injected intravenously with hexavalent uranium at the Massachusetts General Hospital in Boston (patients VII and VIII received tetravalent uranium which does not follow the four compartment model). The study has been

1026360

previously described by BERNARD. It is interesting to note that, although one may approximately fit the excretion data of each patient to a three component exponential function, which is the same form one obtains from the four compartment linear model, the derived decay

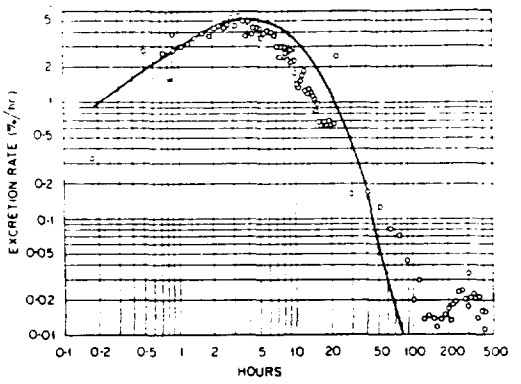

FIG. 5. Saturated model for case of patient BVI.

constants and distribution percentages for the various patients show little relation to each other. However, if one considers the curves in terms of the injected gravimetric dose level then the simple model may be brought back into focus. Patients I, II, and III each received approximately the same initial dose. The initial dose of patient IV was twice the dose received by the first three, while that of patient V was twice as large as patient IV's and, in turn, patient VI received three times the amount given to patient V. This consideration, in which a higher dose results in a lower initial percentage excretion rate, leads directly to the idea that there is some excretion pathway which may become saturated.

On the assumption that the direct path can transport uranyl ions only up to some maximum rate, the model again becomes clear. For two cases that are saturated, i.e. excreting at the same mass rate, the case having the higher initial dose will excrete at a lower percentage rate. The computer is set up to keep the direct path excretion a constant until the amount trying to come through is less than the maximum transfer rate, at which time, relays are used to switch back to the linear setup.

Fig. 5 illustrates the results of applying the saturable model to the excretion data of Boston patient VI, the one receiving the largest injected dose. The significant fact is that the parameters used on the computer setup were not derived from patient VI's data, but were the average values obtained from the Rochester patients, and represent one approach to a general four compartment model for hexavalent uranium. The apparent departure of the data from the model toward the end has been interpreted to be a change in body response just preceeding expiration of the patient. Similar results were obtained for the other Boston patients merely by adjusting one potentiometer which represented the injected dose in terms of micrograms per kilogram.

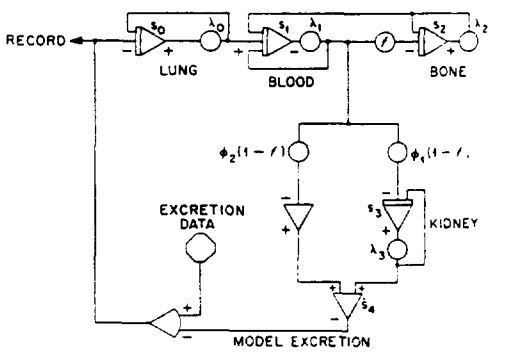

FIG. 6. Inverse model.

Interpretation of excretion data

A major goal of this type of work is represented in Fig. 6. Up to now known inputs have been imposed upon various models and the outputs compared to the measured output data. The question, assuming that one now has an acceptable model, is whether the input function can be derived from a given excretion pattern. The inverse model is an attempt to operate upon urine data to obtain a dynamic estimate of body burden in the several compartments and to infer the form of the input function. Although no satisfactory value of lung half-life is available, a lung compartment is included here to better illustrate the use of the equipment. The operation of the computer setup is rather simple in principle. The set of excretion data is expressed as a function of time by the function generator in which voltage is made to

1026361

correspond to uranium excretion rate. If the output of the model is not equal in magnitude and opposite in sign to the excretion data voltage at any particular time, a very large error signal is obtained from the high gain amplifier. The error signal is fed into the lung compartment. If, for example, the model excretion rate were lower in magnitude than the excretion data the difference would be positive, which is changed to negative by the amplifier, and consequently a large negative voltage appears at the input to the lung compartment. A negative input to the lung with this particular setup will increase the model excretion rate to more nearly approximate the excretion data. By the same means if the model excretion rate is too large, the resulting positive error voltage will tend to make it lower. Now, if the input to the model, i.e. the error voltage, is such as to force the accepted model to excrete the same pattern as the given excretion data, then the error function is a measure of the function which describes the rate of uranium input to the lung.

Fortunately the fidelity of this model is easy to test. The procedure is to replace the function generator with another model having the same parameter values as the first. Then, by introducing a known input, say a step function or a triangular wave, into the generating model, a derived input is obtained which may then be compared with the known original. Such tests showed that the inverse model tends to round off any abrupt changes, e.g. rounding the leading edge of a step function, but that the derived inputs are grossly the same as the given functions The departure from a true reproduction of the input function is largely due to the time lag inherent in the change in model output related to a given input change.

A study is currently being performed on the distribution and excretion of uranium in dogs when exposed to multiple inhalations. The computer techniques that have been outlined will be directly applied to aid in the analysis of this and similar work.

Other applications

Other work that might be of interest includes the fallout computer described by WRIGHT[4] and his associates at the National Bureau of Standards. The computer was developed for predicting the geographic pattern of fallout as a function of certain meteorological data and of the initial height of the cloud. Some recent analog work being done in Texas in connection with tracer studies has been described by MACDONALD.[5]

Further applications of analog computers seem to hold much promise. Preliminary investigations have indicated that computation in connection with long-chain decay series, and direct plotting of solutions to non-linear differential equations can be greatly facilitated. Perhaps, the most attractive current application of an analog computer is to extend the model work to include translocation of daughter products between compartments and eventually to the computation of maximum permissible concentration based upon any desired critical organ.

Acknowledgments—The author is deeply indebted to J. R. MUIR for his assistance in performing the work described as well as for his help in preparing this report. Much credit is due also to F. P. GREEN for his aid in obtaining computer time and for his many helpful suggestions on computer setup.

REFERENCES

1. S. R. BERNARD and E. G. STRUXNESS. *A Study of the Distribution and Excretion of Uranium in Man: An Interim Report.* ORNL-2304.
2. C. VOEGTLIN and H. C. HODGE. *Pharmacology and Toxicology of Uranium Compounds*, Ch. II, p. 701–727 McGraw-Hill, New York (1949).
3. S. H. BASSETT *et al.*, *The Excretion of Hexavalent Uranium following Intravenous Administration.* II. *Studies on Human Subjects.* University of Rochester, UR-37.
4. J. H. WRIGHT *et al.*, *J. Res. Nat. Bur. Stand.* **58,** No. 2 (1957).
5. J. R. MACDONALD *et al.*, *Rad. Res.* **6,** 585 (1957).

General references

KORN and KORN, *Electronic Analog Computers.* McGraw-Hill (1952).

C. L. JOHNSON, *Analog Computer Techniques.* McGraw-Hill (1956).

W. W. SOROKA, *Analog Methods in Computation and Simulation.* McGraw-Hill (1954).

1026362