702740

A Shielded Coil for Continuous Scintillation Monitoring of Circulating Radioactivity

SAM A. THREEFOOT, MD

CONTINUOUS MONITORING OF CIRCULATING RADIOactivity is sometimes advantageous for the study of both biologic and nonbiologic subjects. Rapid multiple sampling has the disadvantages that quickly changing events can go undetected between samples and that much time is required for preparation and counting of numerous samples. Further, both multiple sampling and some of the previously reported methods for continuous monitoring[3, 4, 8, 10] are limited to short periods of observation or may remove significant quantities of fluid from the subject.

To obviate these objections, a simple shielded coil was devised to be utilized with any suitable pumping apparatus which can circulate fluid around a scintillator crystal and return it to the subject. This system was designed primarily for detection of the entrance of radioactive tracers into the venous system after injection into lymphatics in order to demonstrate lymphaticovenous communications.[11] Double lumen catheters were placed in the inferior and superior vena cava of heparinized dogs so that blood could be circulated through the coils by means of a dual extracorporeal pump and returned to the circulation beyond the point of sampling (Fig. 1). The method can be used, however, for prolonged continuous monitoring and recording of radioactivity from either veins or arteries of living animals for a variety of purposes, including uptake and turnover studies, continuous blood volume determinations, etc., without multiple sampling and loss of blood.

Description

The basic components of the system are: (1) coil support; (2) plastic tubing for coil; (3) lead housing.

Coil support: The coil support is made of aluminum as indicated by part 2 of the mechanical drawing (Fig. 2). The inside dimension will accommodate a one-inch scintillator crystal (Fig. 3) and will permit plastic tubing of a selected size to be coiled around the outside without kinking or crimping to provide geometric exposure sufficient for detection of small concentrations of radioactivity in the blood or other fluid circulated through the tubing. The dimensions of the support may be altered to accommodate crystals of other sizes.

Plastic tubing: The plastic tubing used for the coil (Fig. 3) may vary in size within the acceptance limit of the coil support and can be of any suitable material. It may be disposable or re-usable after decontamination and sterilization.

Lead housing: The lead housing is milled from a solid cylinder of cast lead of selected size and thickness. The dimensions of the "well" in the housing are calculated to accommodate the coil support with the tubing (Fig. 2). A spiral groove is milled out along one wall of the well to accommodate the descending limb of the tubing without crimping or impingement between the coil support and the housing so that the tubing may then be coiled around the support from below upward (Fig. 3). The housing may be constructed of any thickness necessary to provide adequate shielding under the circumstances for which it is to be used.

Calibration

The necessity for quantitative calibration is dependent upon the particular use to which the

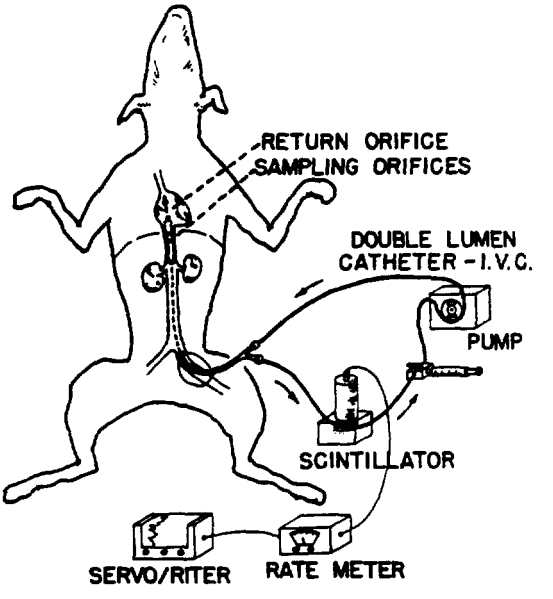

FIG. 1. Exemplary diagram of continuous measurement of circulating radioactivity in the inferior vena cava (IVC) of a dog. Other types of cannulae may replace the double lumen catheter illustrated. The system may be duplicated for simultaneous sampling from multiple sites. Outlets for periodic sampling for calibration and or standardization may be placed at any appropriate location in the circuit.

From the Angiology Research Laboratory, Touro Research Institute, and Department of Medicine, Tulane University School of Medicine, New Orleans, La.

The technical assistance of Mr. Thomas J. Close is acknowledged.

Supported in part by U.S. Public Health Service grant H-01520 from the National Institutes of Health, The John A. Hartford Foundation and The J. Aron Research Fund.

REPOSITORY REEC
COLLECTION Tulane University Journals
BOX No. n/a
FOLDER n/a

0024204

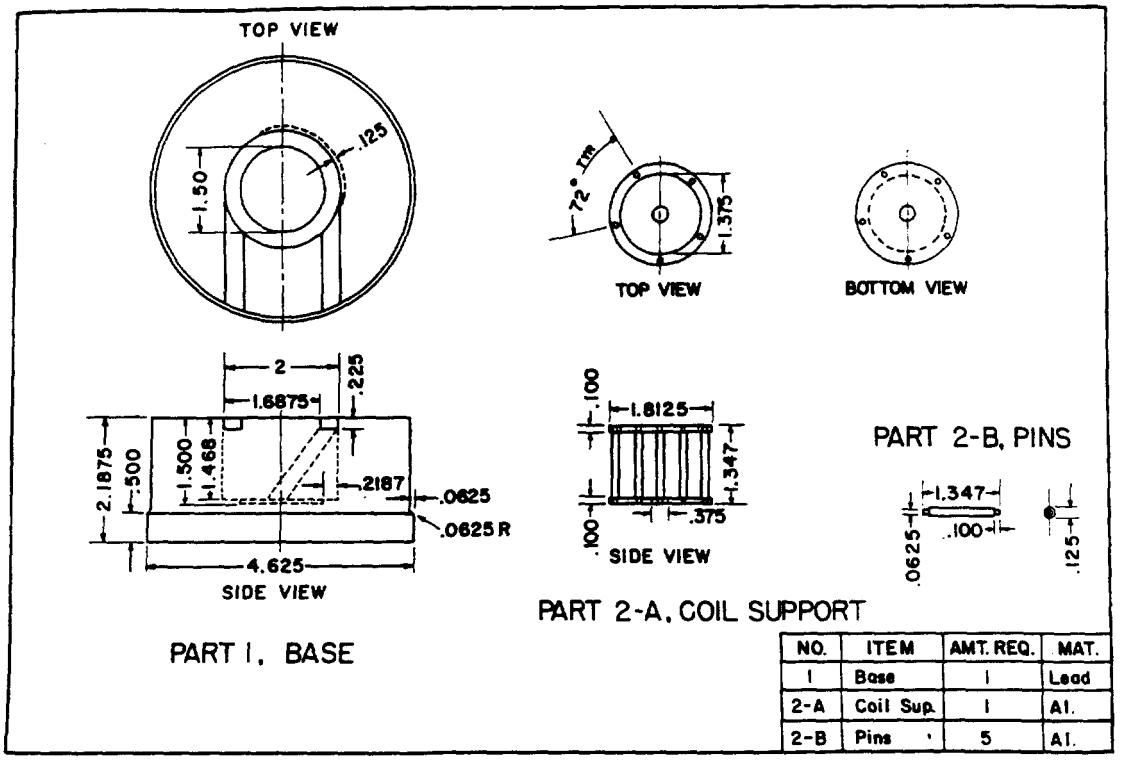

Fig. 2. Mechanical drawing of the coil support and lead shield designed for use with a one-inch scintillator crystal.

system is put. In some types of detection studies no calibration is needed or possible. However, if the count rate or recorder deflections are to be compared with injection standards or are to be translated into concentration values for determination of dilution factors, periodic samples can be taken from a sampling point (Fig. 1) and a conversion factor determined.[8, 10]

Since the geometry of the coil is constant, the relationship between the concentration of radioactivity determined by an independent sample counting method and the recorded count rate is constant:

$$\frac{\text{Concentration } t_1}{\text{Count Rate } t_1} \times \text{Count rate } t_2 = \text{Concentration } t_2$$

where: Concentration t_1 = that determined by GM or well counting of a sample of the circulated fluid at the time of sampling;

Count rate t_1 = the rate meter or recorder deflection at the time of sampling; and

t_2 = any other time.

Results of an in vitro calibration experiment confirm the linear relationship of concentration to count rate. With the equipment used the ratio was 1:2.5 (0.4), (Fig. 4 A, B). By appropriate adjustment of the values of the ordinate, setting background as the baseline, concentration can be read directly from the recorded curve (Fig. 5).

The lag time from the source to the coil is dependent upon the flow rate and the volume of the system between the subject and the coil. Obviously, these will vary with the size and length of the tubing, the size of intake and output orifices and the characteristics of the pumping system. If consideration of the traverse time from the sampling orifice to the detector is necessary,[4] this time must be determined for each experimental set-up in which the pertinent factors vary.

The conditions of the calibration study illustrated here were such that fluid traveled from the reservoir to the coil in about one second and completed passage through the coil in another second. When a double lumen cardiac catheter was used, narrower orifices impeded flow and approximately 6 seconds were required for travel from the reservoir through the coil, about half of which was for passage through the coil alone.

Discussion and Summary

Although devices for continuous sampling and recording have been utilized for dye dilution curves for various purposes,[2-8, 10] most are limited to relatively short periods of observation and re-

0024205

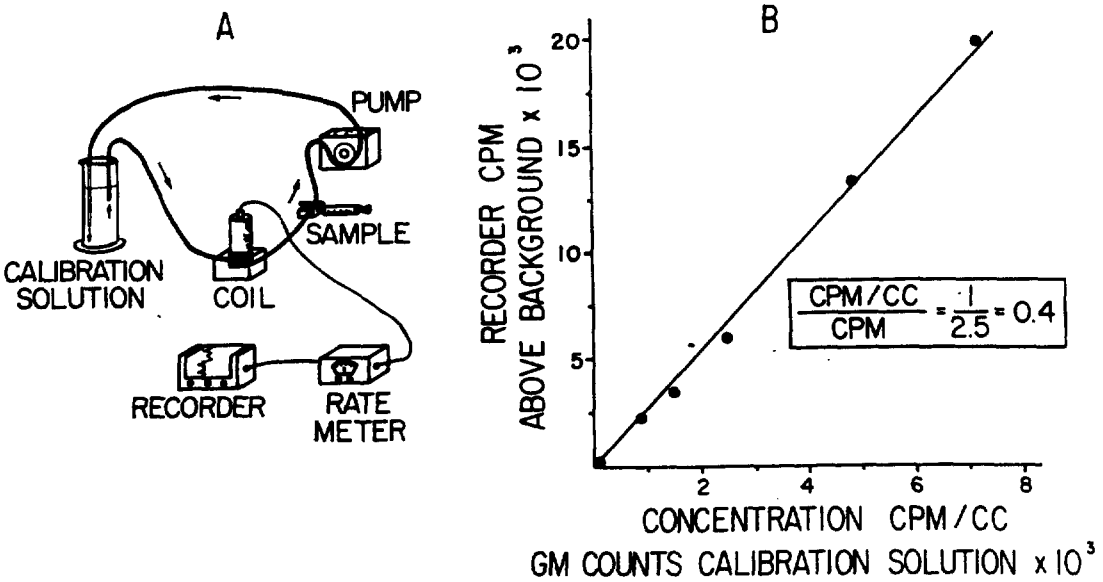

FIG. 4. A, diagram of in vitro system for calibration. B, plot of calibration results. Samples for determination of concentration of the circulating fluid were obtained from both the reservoir containing the calibration solution and the sampling site indicated. For the particular method of GM counting of the sampled fluid, there was a factor of 0.4 for conversion of recorder count rate to concentration, for concentrations ranging from 1,000 to 8,000 cpm/cc, and count rates of 2,500 to 20,000 cpm. By simultaneous circulation through 2 "coil" systems, each may be calibrated against the other and adjusted to comparable sensitivity.

quire removal of fluid from the sampled pool. The apparatus described herein may be utilized either in a circuit or as an open-end sampling method. It provides good geometrical exposure to the crystal necessary for detection of small quantities of radioisotope of low concentration but can also be used for assay of fluids with high count levels.

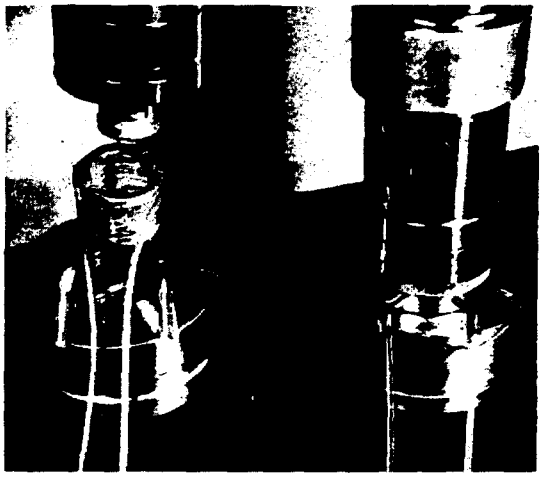

FIG. 3. Photograph of 2 assemblies. The disassembled display on the left exhibits the component parts. Cellophane tape around the outside of the plastic tubing holds it in place on the coil support and permits easy changing of the tubing. Additional shielding may be placed between the subject and the scintillators if needed. All components, including rate meters and recorder, can be mounted on a roller cart.

Description of this coil is presented as an alternative system to the "inverted" versions intended for insertion into conventional well counters which can perform similar functions[1, 3, 4] (e.g. Radicoil®) but which may be too bulky, immobile and expensive for some purposes.

The coil described here can be utilized with the same scintillator probes available on many of the systems used for renograms or for sample counting and has the advantage of mobility from place to place while not sacrificing sensitivity. The size and mobility of the equipment enables the investigator to use multiple units for monitoring from more than one vascular channel in a room which may be already crowded with other equipment. Although investigators possessing any of a variety of scintillator probes and rate meters need no new equipment, it may be desirable to use a coil support and shield with the size and shape of the internal dimensions different from those presented in Figure 2. In the experiments for which this coil was designed, a dual extracorporeal pump was utilized but for use in man a safer dual push-pull syringe pump, with simultaneous sampling by one syringe and return by the reciprocating syringe, can be used with either needles or catheters in the appropriate vessels and anticoagulation of the blood in the extracorporeal circuit.

Address for correspondence: Sam A. Threefoot, MD, Director of Research, Touro Research Institute, 3516 Prytania Street, New Orleans, La.

002420b

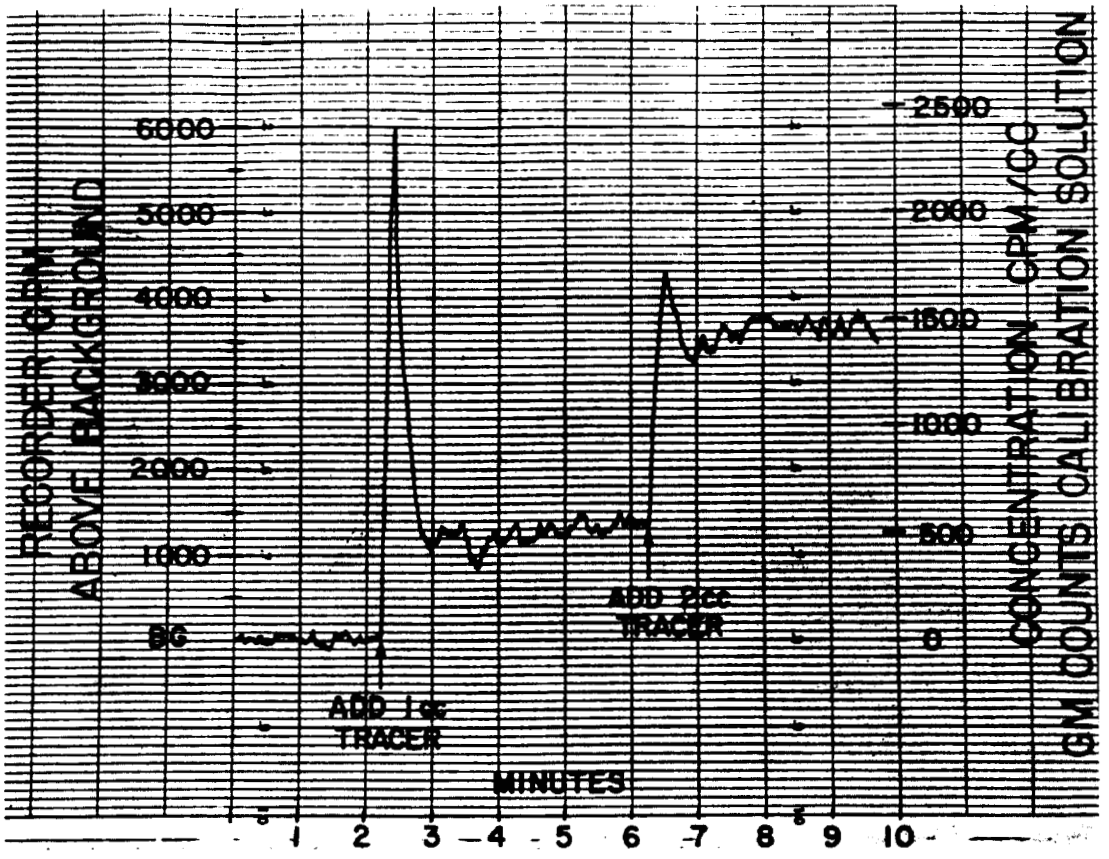

Fig. 5. Copy of actual recording of count rate of circulating calibration solution. ^{131}I-Albumin was added to the cylinder of fluid illustrated in Figure 4 A at the instants indicated by the arrows. The first addition of one cc was near the uptake orifice to test the ability of the system to record the bolus and its subsequent mixing. The second addition of 2 cc was farther from the uptake orifice with dilution before uptake accounting for the smaller initial deflection. The ordinate values on the left are the actual count rate of the rate meter and recorder corrected only for background and those on the right are the concentration of fluid sampled from the reservoir and the circuit as shown in Figure 4. Known volumes of fluid were counted with a GM tube and corrected to cpm/cc, which value was 0.4 times the count rate of the recorder. Examples of curves obtained from living animals with various types of tracer materials have been published.[11]

REFERENCES

1. Albert, S. N., W. A. Spencer, Murray Finkelstein, Jo Shibuya, Seymour Alpert and Charles S. Coakley: A Plastic Coil Simplifying Radioactive Liquid Phase Counting. *J. Lab. Clin. Med* **48**:471, 1956.

2. Boyett, John D., Darwell E. Stowe, Leroy H. Becker and William E. Britz, Jr.: Rapid Method for Determination of Cardiac Output by Indicator Dilution Techniques. *Ibid.* **64**:160, 1964.

3. Crane, M. G., J. E. Holloway, R. Adams and I. C. Woodward: The Relative Flow Rates of Red Cells and Plasma-Peripheral and Central Circulation Studies in the Dog. *Int. J. Applied Rad. Isotopes* **7**: 23, 1959.

4. ———, John E. Holloway, Ralph Adams and Ivor C. Woodward: The Relative Mean Transit Times of Red Cells and Plasma in the Portal Circulation of the Dog. *J. Nuclear Med.* **4**:293, 1963.

5. Emanuel, Richard W., William W. Lacy and Elliot V. Newman: An Improved Method for Calibration of Continuously Recorded Dye Dilution Curves. *Circ. Res.* **5**:527, 1957.

6. Falholt, W., and E. Kaiser: A Whole Blood Calorimeter for Continuous Registration of Evans Blue Dye Concentration. *Circ. Res.* **3**:469, 1955.

7. Fox, I. J., and E. H. Wood: Blood Flow Measurements by Dye Dilution Technics. *In* Medical Physics, vol. 3. Chicago Year Book Publishers, 1960; p. 155.

8. MacIntyre, William J., Walter H. Pritchard, Richard W. Eckstein and Hymer L. Friedell: The Determination of Cardiac Output by a Continuous Recording System Utilizing Iodinated (^{131}I) Human Serum Albumin—I. Animal Studies. *Circulation* **4**:552, 1951.

9. Lacy, William W., Richard W. Emanuel and Elliot V. Newman: Effect of the Sampling System on the Shape of Indicator Dilution Curves. *Circ. Res.* **5**: 568, 1957.

10. Pritchard, Walter H., William J. MacIntyre, William C. Schmidt, Bernard L. Brofman and Douglas J. Moore: The Determination of Cardiac Output by a Continuous Recording System Utilizing Iodinated (^{131}I) Serum Albumin—II. Clinical Studies. *Circulation* **4**:572, 1952.

11. Threefoot, S. A., M. F. Kossover and D. W. Aiken: Radioisotopic Detection of Lymphaticovenous Communications in Living Animals. *J. Lab. Clin. Med.* **65**:688, 1965.

0024207