702692

Holes for Angiography

870138

John OTIS

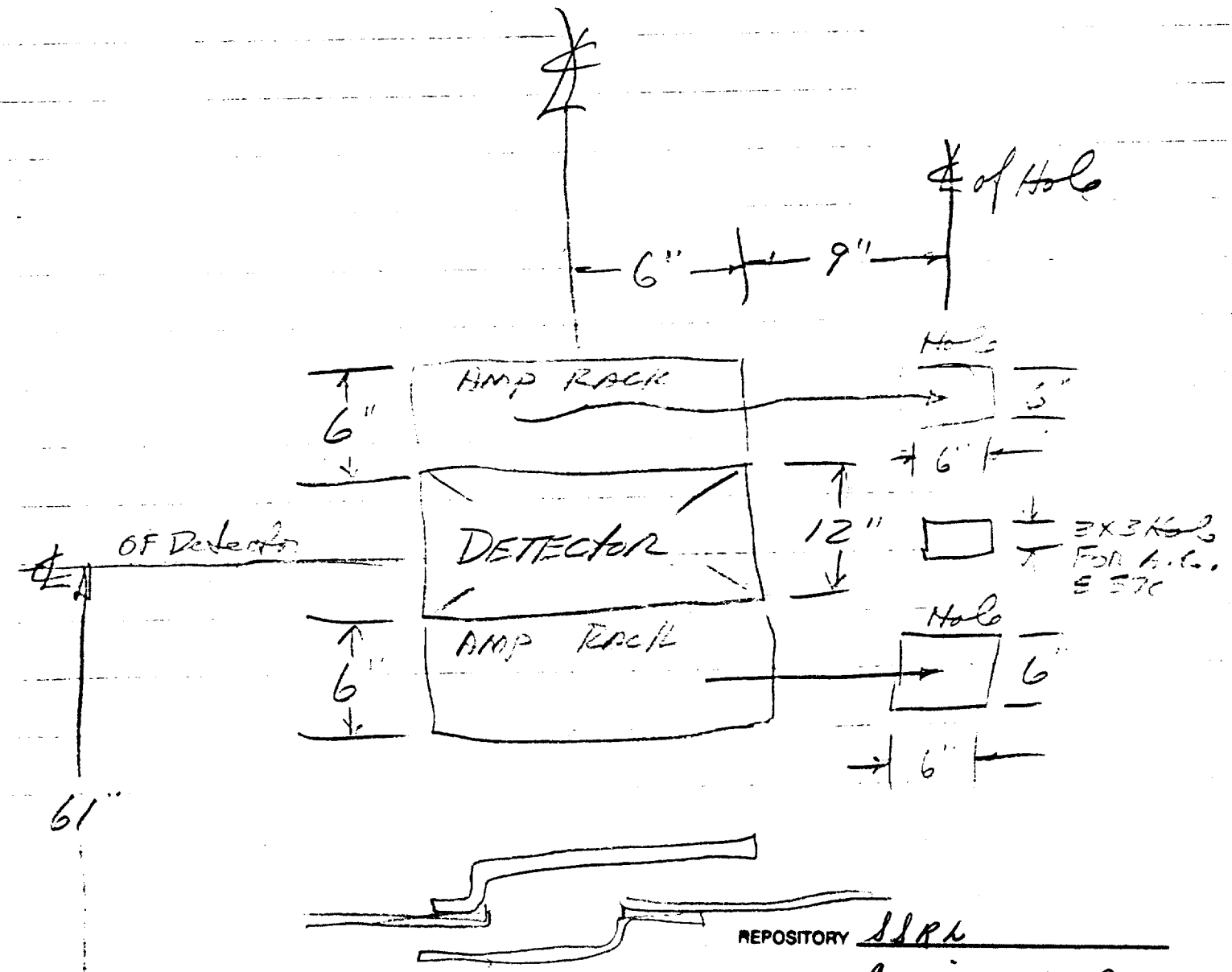

REPOSITORY SSRL

COLLECTION Angiography Program

BOX No. File Cabinet

FOLDER Angiography Proposal Files

0021834

(over)

SSRL BEAM LINE IV-2 ANGIOGRAPHY EXAMINATION ROOM

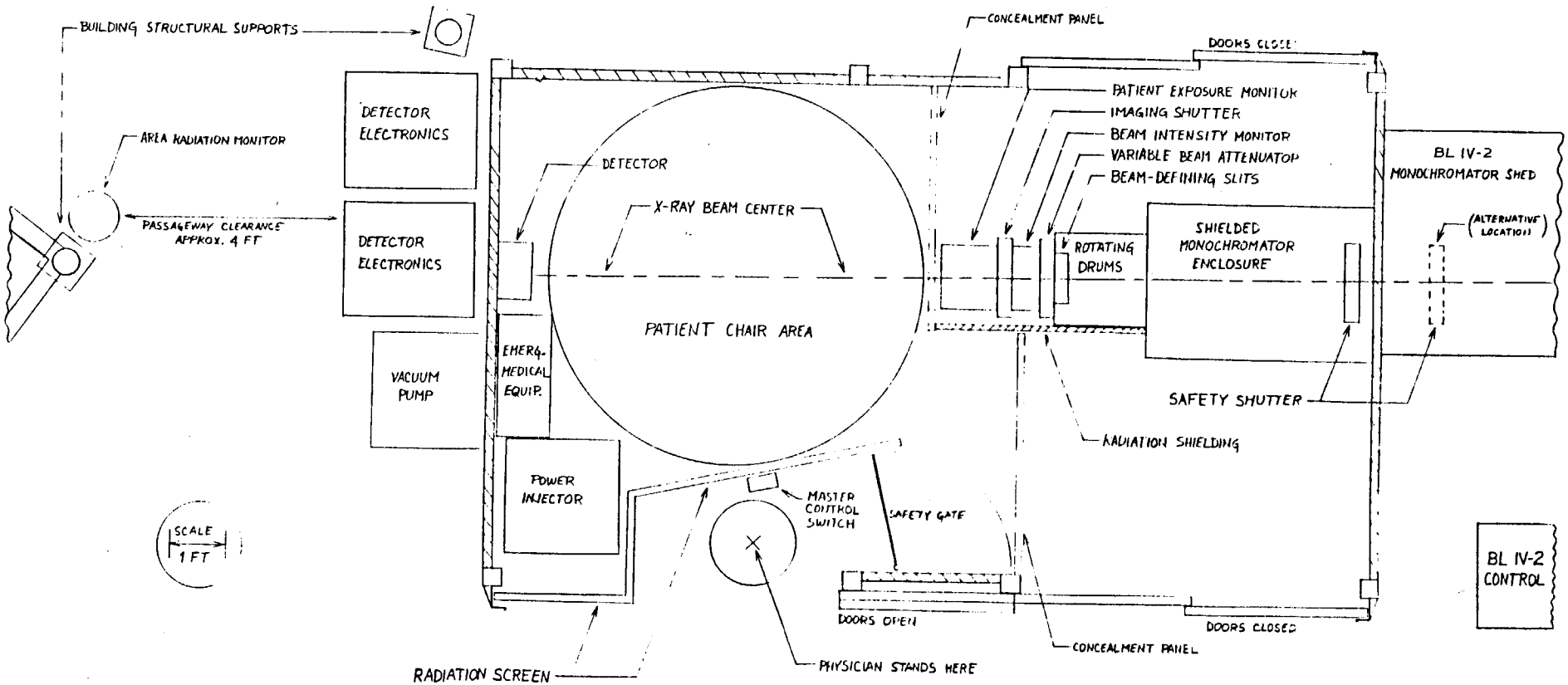

INTERIOR DIMENSIONS 15 FT X 8.5 FT (4.6 M x 2.3 M)

0021835

Original file contains drawings, these are non copyable.

0021836

10:00 mon.

Wiggler setting
Steering calc for 4 & manual all other.

Ion chamber calibration —
primary — TLD — Friday
cross-check of detectors ~~to~~ e⁻ I for each exposure.

Check-out of —
Safety Shutters
Imaging shutters
Dumps

Exp. — Checklist — 2 people sign

Interlock syst — Heltel — Jozef.

0021837

Department of Energy
San Francisco Operations Office
1333 Broadway
Oakland, California 94612

DEC 5 1990

Mr. John A. Cerino
Chairman, Safety Committee
Stanford Synchrotron Radiation Laboratory
SLAC, BIN 69, Box 4349
Stanford, CA 94309

Dear Mr. Cerino:

RE: Human Subject Research at SSRL

Thank you for clarifying the situation at SSRL concerning the use of human subjects. I spoke with Dr. Susan Rose this morning and relayed to her your assurance that there is no work involving the use of human subjects going on at SSRL at this time.

For reference, enclosed are copies of two letters recently sent to Dr. Burton Richter and Eugene Rickansrud and DOE Order 1300.3 (8-23-90) -- Policy on the Protection of Human Subjects. Additionally, Dr. Rose's address and telephone number are included below.

Thank you again for your help.

Sincerely,

Joseph E. Aaron

Joseph E. Aaron
Energy Research Division

Enclosures: As stated

cc: Dr. Susan L. Rose, ER-73
Radon Program Manager
Human Health and Assessments Division
Office of Health and Environmental Research
U.S. Department of Energy
Washington, DC 20545
(301) 353-4731 or FTS 233-4731

0021838

FILE

Department of Energy
San Francisco Operations Office
1333 Broadway
Oakland, California 94612

OCT 1 6 1990

Mr. Eugene B. Rickansrud
Associate Director
Business Services Division
Stanford Linear Accelerator Center
P. O. Box 4349
Stanford, CA 94305

Subject: DOE Order 1300.3 - Policy on the Protection of Human Subjects

Dear Mr. Rickansrud:

The subject Directive is provided to you for information, by authority of SAN MD 4210.1E.

If you have questions in regard to this DOE Order please feel free to call Joseph Aaron of the Energy Research Division on (415) 273-6421.

Sincerely,

Joann P. van Guillory, Acting Director
Contracts Management Division

1 Enclosure
As stated

0021839

Department of Energy
Washington, DC 20585

August 16, 1990

Dr. Burton Richter
Director
Stanford Linear Accelerator
Center
P.O. Box 4349
Stanford, California 94309

Dear Dr. Richter:

Some time ago the Office of Energy Research wrote to the Managers of the Department of Energy (DOE) Operations Offices in reference to draft DOE Order 1300, "Policy on the Protection of Human Subjects." Under the draft Order, this Office has the responsibility for assuring appropriate implementation and compliance for the entire DOE system. We have asked the operations offices for a point of contact for human subject research related activities, and have subsequently asked a number of DOE contractors to identify individuals within their organizations who could be similar points of contact. In an effort to reach all DOE and DOE contractor organizations regarding this program, I am writing you to ask that if your organization may be involved in any human subject research, even as a collaborator, you name an individual as a point of contact.

Human subject research responsibilities in the Department have been assigned to Dr. Susan L. Rose, ER-73, Human Health and Assessments Division, Office of Health and Environmental Research. Please provide her, in writing, the name of a point of contact for these activities within your office. If you do not have human subject research, according to the definition provided in the attached Federal Model Policy, please so state in writing to Dr. Rose.

For your information, I have enclosed the November 10, 1988, Federal Register notice of proposed rulemaking for the "Protection of Human Subjects." The final version of this notice will replace the current DOE CFR Part 745 (enclosed), and will be the policy under which DOE facilities will operate. Also enclosed is a draft of DOE Order 1300, "Policy on the Protection of Human Subjects," which is expected to be published in the near future.

Sincerely,

for James F. Decker
Acting Director
Office of Energy Research

Enclosures

cc: D. W. Pearman, Jr., Manager
San Francisco Operations Office

0021840

U.S. Department of Energy
Washington, D.C.

ORDER

DOE 1300.3

8-23-90

SUBJECT: POLICY ON THE PROTECTION OF HUMAN SUBJECTS

---

1. PURPOSE. To establish the Department's responsibilities for implementing policy set forth in 10 CFR Part 745, Protection of Human Subjects.

2. SCOPE. The provisions of this Order apply to all Departmental Elements and all contractors and subcontractors performing work for the Department, as provided by law and/or contract, and as implemented by the appropriate contracting officer. This includes non-DOE funded work at DOE-owned, -leased, or -controlled facilities.

3. REFERENCES.

   a. DOE 4300.2A, NON-DEPARTMENT OF ENERGY FUNDED WORK, of 12-19-86, which establishes the policy, responsibilities, and procedures for authorizing and administering non-DOE funded work performed under DOE contracts.

   b. Title 10 CFR Part 600, DOE Financial Assistance Regulations, which provides the policies and procedures for administration and management of all DOE financial assistance activities.

   c. Title 10 CFR Part 605, Office of Energy Research Special Research Grants Program Regulations, which provides the policies and procedures for the administration and management of basic and applied research grants awarded by the Office of Energy Research.

   d. Title 10 CFR Part 745, Protection of Human Subjects, which sets out DOE's regulations for protection of human subjects involved in research activities.

   e. Chapter 9 of Title 48 of the Code of Federal Regulations, Department of Energy Acquisition Regulations (DEAR), which provides the contracting policies established for DOE.

4. BACKGROUND. In December 1981, the President's Commission for the Study of Ethical Problems in Medicine and Biomedical and Behavioral Research recommended and proposed a uniform set of regulations, based on those of the Department of Health and Human Services, to be adopted by all Federal agencies and departments conducting human subject research. A proposed model Federal Policy for the protection of human subjects was published in

0021841

DISTRIBUTION:
All Departmental Elements

INITIATED BY:
Office of Energy Research

the Federal Register on November 10, 1988, establishing this uniform set of regulations as a common rule. This Order implements 10 CFR Part 745, as currently written, and at such time that it is amended to conform with the common rule.

5. DEFINITIONS.

a. Assurance (Multiple Projects, (or) Single Project) means the written documentation, satisfactory to the Secretary of Energy, required from the prospective performing institution that assures institutional compliance with and implementation of DOE regulations for the protection of human research subjects.

b. Certification is the official notification by the institution to DOE in accordance with the requirements of 10 CFR Part 745, that a research project or activity involving human subjects has been reviewed and approved by an Institutional Review Board in accordance with an approved assurance (see paragraph 5a).

c. Contracting Officer is a person authorized to enter into, administer, or terminate contracts, financial assistance awards, and sales contracts and to make related determinations and findings.

d. DOE Contractors are entities who receive awards from DOE, including management and operating contractors (M&O), which manage, operate, or provide site services to DOE research or production facilities that are principally engaged in work for the Department.

e. DOE Facilities are any of the DOE-owned, -leased, or -controlled facilities.

f. Field Organization is a general term for any officially established Departmental component (excludes individual duty stations) located outside the Washington, D.C., metropolitan area.

g. Human Subject is a living individual about whom an investigator (whether professional or student) conducting research obtains (1) data through intervention or interaction with the individual, or (2) identifiable private information. "Intervention" includes both physical procedures by which data are gathered (for example, venipuncture) and manipulations of the subject or the subject's environment that are performed for research purposes. "Interaction"

includes communication or interpersonal contact between investigator and subject. "Private information" includes information about behavior that occurs in a context in which an individual can reasonably expect that no observation or recording is taking place, and information which has been provided for specific purposes by an individual and which the individual can reasonably expect will not be made public (for example, a medical record). Private information must be individually identifiable (i.e., the identity of the subject is or may readily be ascertained by the investigator or associated with the information) in order for obtaining the information to constitute research involving human subjects.

h. Informed Consent is the legally effective consent by the human research subject, or the subject's legally authorized representative, to participate in research covered under this policy. It is obtained after providing to the subject the basic elements of informed consent as set forth in 10 CFR Part 745. Informed consent documents shall include disclosure of all potential risks and related consequences or adverse effects, as well as any benefits that may occur as a result of such participation.

i. Institution is any public or private entity or agency (including Federal, State, and other agencies).

j. Institutional Review Board (IRB) is a board or committee charged with the responsibility for review of research activities involving human subjects conducted at, or sponsored by, the institution and approved by the Department of Health and Human Services (HHS) or the DOE. The composition of the IRB and details of its procedures and responsibilities are specified in 10 CFR Part 745 and included in the multiple, single, or other project assurance.

k. IRB Approval is the determination of the IRB that the research has been reviewed and may be conducted at an institution or facility within the constraints set forth by the IRB and by other institutional and Federal requirements.

l. Minimal Risk means that the probability and magnitude of harm or discomfort anticipated in the research are not greater in and of themselves than those ordinarily encountered in daily life or during the performance of routine physical or psychological examinations or tests.

m. Management and Operating Contractors are those contractors designated by the Secretary in accordance with DOE policies.

n. Non-DOE Entities include other Federal agencies, State, regional, and local governments; educational institutions; private individuals, commercial firms, non-profit or not-for-profit organizations; international bodies; and foreign governments, individuals, firms, or organizations.

o. Non-DOE Funded Work is any work performed for non-DOE entities that utilize DOE facilities or contractor personnel and which is not funded, wholly or in part, by DOE.

p. Program Secretarial Officer (PSO) is a Secretarial Officer of the Department who has responsibility for research and development missions and Departmental programs.

q. Research is a systematic investigation, including research development, testing, and evaluation, designed to develop or contribute to generalizable knowledge. Activities which meet this definition constitute "research" for purposes of this Order, whether or not they are conducted under a program which is considered research for other purposes. For example, some "demonstration" and "service" programs may include research activities.

6. POLICY. It is the policy of the Department of Energy that:

a. The rights and welfare of human subjects involved in research supported or sanctioned by DOE be protected in accordance with 10 CFR 745.

b. Until the requirements of this Order and 10 CFR 745 have been met, no research activity involving human subjects shall be initiated.

7. RESPONSIBILITIES AND AUTHORITIES.

a. The Secretary establishes Department of Energy policy for the protection of human subjects consistent with 10 CFR 745.

b. Director of Energy Research (ER-1) is responsible for the implementation of 10 CFR 745 within the Department in accordance with policy established by the Secretary.

c. Associate Director for Health and Environmental Research (ER-70).

(1) Develops and implements procedures on the protection of human of human subjects.

(2) Prepares and updates guidance to be followed for obtaining approval for human subject research.

(3) Approves all human subject assurances, negotiations, and evaluation processes. ER-70 may delegate authority for the evaluation and negotiation processes to the Heads of Field Organizations.

(4) Reviews all research with human subjects for compliance with DOE regulations and Orders and applicable Federal regulations. In a timely fashion, approves, rejects, or requests additional information on proposed work and provides written determination of human subject compliance to the PSO or appropriate Head of Field Organization.

(5) Investigates allegations of noncompliance with 10 CFR 745 and this Order, and recommends to the PSO or Head of Field Organization appropriate action required.

(6) Serves as the official DOE representative on the Interagency Human Subjects Coordinating Committee.

d. Program Secretarial Officers or their Designees.

(1) Implement the procedures established by ER-70.

(2) Review all proposals and applications to identify research involving human subjects.

(3) In accordance with procedures developed by ER-70, request determination of compliance by ER-70.

(4) Supply ER-70's determination of compliance with 10 CFR 745 to the cognizant contracting officer.

(5) Promptly notify ER-70 of known or potential adverse human health effects and issues of non-compliance in 10 CFR Part 745.

e. Heads of Field Organizations or their Designees.

(1) Fulfill responsibilities of PSO's under paragraph 7d for non-DOE funded work at DOE-owned or -leased facilities.

(2) Fulfill responsibilities of PSO's under paragraph 7d for DOE-funded work originating in the field office or Government-owned Government-operated facilities.

f. Contracting Officers.

(1) Include in appropriate solicitations a provision requiring human subject research information in accordance with 10 CFR 745.

(2) Require receipt of complete assurance, certification, and ER-70 human subject approval documents, prior to initiation of research involving human subjects.

BY ORDER OF THE SECRETARY OF ENERGY:

JIM E. TARRO
Director of Administration and
Human Resource Management

0021846

STANFORD UNIVERSITY
Stanford, California 94305
(415) 723-2883

CERTIFICATION OF HUMAN SUBJECTS APPROVAL

DATE: January 3, 1989

TO: E. Rubenstein, MD, MACP,
J.C. Giacomini, MD, H.J. Gordon, MD, and
R. Hofstadter, PhD
Department of Medicine

FROM: Chairman, Administrative Panel
on Human Subjects in Medical Research

PROTOCOL TITLE:
K-Edge Angiography with Synchrotron X-Rays

The Panel approved human subjects involvement in your research project on January 3, 1989.

The expiration date of this approval is January 2, 1990. If this project is to continue beyond that date, please submit an updated proposal in advance for the Panel's re-approval. If this proposal is used in conjunction with any other human experimentation or if it is modified in any way, it must be re-approved for these special circumstances. In addition, the Panel requests prompt notification of any complications which may occur during any experimental procedure.

All continuing projects and activities must be reviewed and re-approved at least annually by the Panel. Panel approval of any project is for a maximum period of one year. It is the responsibility of the investigator to resubmit the project to the Panel for annual review.

Alice Haskett
for David Oakes, M.D., Chairman

cc: Sponsored Projects
Cheryl Aiona

Funding Agency: (NIH HL39253 and DOE DE-FG03-87ER 60527)(R)
Period of Time: 01/03/89 through 01/02/90
Investigational New Drugs: N ,
Investigational New Device: N ,
Cooperating Institution: N
Full Board Review
Assurance Number: M1272
IRB #01

0021847

STANFORD UNIVERSITY
STANFORD, CALIFORNIA 94305-4125

SPONSORED PROJECTS OFFICE
JORDAN QUAD/BIRCH
125 Panama Street

Telephone (415) 723-2883
Fax (415) 723-1654

Date: December 21, 1988

To: Edward Rubenstein
MED/GEN INTERNAL

From: Brian Hoffman, M.D. BH/KM
Chair, Administrative Panel on Laboratory Animal Care

Subject: APLAC Approval of Protocol 1009/0

Protocol: K-Edge Subtraction Angiography with Synchrotron Radiation

Grant: K-Edge Subtraction Angiography with Synchrotron X-Rays
NIH HL39253 (SPO #4411)

Protocol Approved for Period: 12/21/88 - 12/20/89

I am pleased to inform you that the Administrative Panel on Laboratory Animal Care has reviewed this protocol and that it was approved at their meeting on 12/21/88.

The expiration date of this approval is 12/20/89. If it is your intention to continue beyond that date, please submit an updated protocol thirty days before the expiration date for the Panel's re-approval. Requests for any changes to this protocol during the approval period must be filed with the Panel. A copy of this memo and protocol should accompany any request for changes. The Panel requests prompt notification of any complication which may occur during an experimental procedure involving animals.

cc: Sponsored Projects Office
KAM File
Panel File
Ursula Businger
Tim Brashear

0021848

~~Cerino~~ angio file

S S R L M E M O R A N D U M

Date: April 21, 1987

TO: WILLIAM GOUGH

FROM: A. BIENENSTOCK
Director

SUBJECT: PLANNED HUMAN ANGIOGRAPHY EXPERIMENT

Dear Bill,

This memo is to inform you of the planned second series of "Iodine Dichromography" experiments with human subjects to be carried out at SSRL.

The experiments will be carried out by the same reseach team which performed the original experiments last year. The exposure control hardware and the medical and experimental protocols are unchanged.

The medical protocols and informed consent material have been reviewed and re-approved by the Stanford University Human Subjects Committee. A copy of the approval is included herewith.

The present plan is to use four subjects, one of whom participated in the first experiment, commencing Friday, April 24, and at the rate of one per day through Monday, April 27.

Since the original experiment, the safety interlock system has been further analysed by our engineering staff and design changes proposed which are intended to improve the reliability of the system. These designs have been subjected to critical review by interlock designers from both SLAC and LBL.

Today, those reviewers met with SSRL engineering and safety personnel and a SLAC safety representative. They reported the results of their analyses. The conclusion of the review meeting is that the personnel protection interlock design provides adequate radiation protection to the experimenters and angiography subjects. At the same meeting the operational and check-out procedures were confirmed to be identical to last run.

Since the previous review of the experimental conditions and protocols resulted in a low hazard classification, and since no changes of conditions or procedures have been made, we believe that that rating is still in effect.

Sincerely,

A. Bienenstock

cc w/att:
J. CERINO

0021849

OFFICE MEMORANDUM STANFORD UNIVERSITY OFFICE MEMORANDUM STANFORD UNIVERSITY

DATE: January 6, 1987

TO: E. Rubenstein, M.D.,
R. Hofstadter, Ph.D., J. Giacomini, M.D.
& H.J. Gordon, M.D.
Department of Medicine

FROM: Chairman, Administrative Panel
on Human Subjects in Medical Research

PROTOCOL TITLE:
K-edge Angiography with Synchrotron X-rays.
(Grant: K-edge Substraction Angiography with Synchrotron X-rays)

The Panel approved human subjects involvement in your research project on January 6, 1987.

The expiration date of this approval is January 5, 1988. If this project is to continue beyond that date, please submit an updated proposal in advance for the Panel's re-approval. If this proposal is used in conjunction with any other human experimentation or if it is modified in any way, it must be re-approved for these special circumstances. In addition, the Panel requests prompt notification of any complications which may occur during any experimental procedure.

All continuing projects and activities must be reviewed and re-approved at least annually by the Panel. Panel approval of any project is for a maximum period of one year. It is the responsibility of the investigator to resubmit the project to the Panel for annual review.

for Patty Gannon
Don R. Goffinet, M.D., Chairman

cc: Sponsored Projects

0021850

Funding Agency: (NIH HL29824, NIH HV38039 & DOE DE AT03 84ER60200)
Period of Time: 01/06/87 through 01/05/88
Investigational New Drugs: N,
Investigational New Device: N

S S R L M E M O R A N D U M

Date: April 21, 1987

TO: DISTRIBUTION

FROM: JOHN CERINO

SUBJECT: ANGIOGRAPHY PERSONNEL PROTECTION INTERLOCK REVIEW MEETING NOTES

The following persons met today to review and approve the personnel protection interlock system (APPI) for use in performing "Iodine Dichromography" experiments using synchrotron radiation at SSRL.

From SSRL: J. Cerino, R. Hettel, C. Troxel, H. Winick
From SLAC: K. Crook, G. Warren
From LBL: J. Henderson, C. Sealy
From Angiography Group: J. Otis, A. Thompson, H. Zeeman

Henderson and Sealy reported on their separate reviews of the interlock relay logic design. After making suggestions for design documentation technique which would ease maintenence and trouble-shooting, each reported that the logic design is sound and safe.

Crook presented a summary report of the results of an ad hoc SLAC committee review of the solid state interlock logic. The report is attached hereto. In addition, a list of committee recomendations for system and/or procedural modifications was discussed. These recommendations had been previously presented to Bob Hettel and have been implemented or otherwise responded to.

The question arose as to what response the APPI gives if it is switched from PATIENT MODE to EQUIPMENT CHECK-OUT MODE in the middle of a scan. At the end of the meeting the group went to BL IV-2 to view the hardware. The above was tested. APPI closes the Safety Shutters if switched while scanning.

In a brief rump session, Mssrs. Crook, Henderson, Hettel and Sealy discussed the system implications of the SLAC recommended revisions.

The unanimous finding of those present is that the APPI, if implemented as designed, provides adequate radiation protection to experimenters and angiography subjects.

Thompson asserted that the experimental procedures and check-outs will be carried out in precisely the manner agreed to last May. A copy of the Cerino memo which addressed those procedures is attached hereto. Paragraph 4 should be amended to read 25 times per agreement of those present.

cc w/att:
ATTENDEES
A. BIENENSTOCK
P. PIANETTA

0021851

S L A C M E M O R A N D U M April 21, 1987

To: John Cerino

From: Ken Crook

Subject: Angiography Interlock Review

In response to your request of 25 February 1987, for an examination of the solid state portion of the human angiography interlocks, I am attaching the results of a review made by an ad-hoc SLAC committee. The committee membership was as follows:

K. Crook	ELD, I&C	Chairman
D. Horelick	ELD, EIN	
H. Smith	ELD, PPS	
J. Fitch	ELD, PPS	
R. Cherkassky	ELD, PPS	
H. Walz	ELD	
T. Inman	Operations	
G. Warren	Operational Health Physics	

The committee met with Bob Hettel, Reuben Yotam and Mike Horton on two occasions; 3/24/87 and 3/26/87. At those meetings, Bob Hettel described the operation of the solid-state sections of the system and answered questions on specific aspects of the design. In addition, the committee members reviewed two documents that described the plan and conceptual design, as well as schematics describing the circuit details.

The documents were:

1. "Framework of Angiography Safety Plan", 2/7/86, John Otis, Albert Thompson.

2. "Angiography Personnel Protection Interlock Conceptual Design", 11/12/86, R. Hettel.

0021852

3. Schematic Drawings, 441-401, 441-404, and 441-408.

A number of questions were raised as a result of the review. For the most part, these were answered in a most satisfactory manner by Bob Hettel. Clearly, an impressive amount of thought and effort has been spent in refining the design and in insuring that redundancy has been provided in all critical circuits. The committee did however make several recommendations to enhance safe operation and to reduce the chances of system malfunctions. These are described in the attached report.

In general, it is my personal opinion, as well as the view of the committee, that if our recommendations are accepted and incorporated into the design, the system will have sufficient redundancy and fail-safe features to provide safe operation of the facility.

KC/bb

Attachment

Copies: R. Larsen
R. Hettel
R. Yotam
M. Horton
Committee Members

S S R L M E M O R A N D U M

Date: May 16, 1986

TO: A. BIENENSTOCK

FROM: JOHN CERINO

SUBJECT: ANGIOGRAPHY SYSTEM OPERATIONAL REVIEW

The following persons met today to review the human angiography operation and procedures:

From SLAC: J. Jasberg, G. Nelson, G. Warren;
From SSRL: J. Cerino, R. Hettel, C. Troxel
From Angiography Group: A. Thompson.

The specific objectives of the group were to:

1. Examine each identifiable hazard to the human research subject, and identify the specific mitigation of it;

2. Establish the operational and check-out procedures necessary to assure safe operation.

Using a fault tree drafted by Cerino, the group conducted the review and generated the following action items:

1. At least 1 physician will be in attendance; the exposure will be performed by a California licensed Radiologist, who will be the person to actually operate the Scan Switch.

2. An attempt will be made by Troxel to improve the hutch ventilation. He will install an emergency light in the patient portion of the hutch.

3. The patients will be acquainted with the emergency exit location of Bldg 131 and be told the sound of the fire alarm.

4. The complete interlock and control system, in its final configuration, will be cycled 100 times without failure before the first human exposure.

5. Hettel and Troxel will develop a check-out protocol for the interlock system and it will be performed by one of them prior to each new patient exposure. Subsequent to that check-out no access will be permitted to the monochromator or drum/shutter tank until the human exposure is complete. A signed record of the check will be made.

6. There will be a one-time calibration of the beam monitors against TLD's. Prior to each patient exposure a cross check of the 2 monitors and the SPEAR beam current will be made.

0021854

7. Al Thompson presented a draft experimenter check list for review. The check-out will be performed by 2 members of the experimental team prior to each new patient exposure. A signed record of the check will be maintained in the experimental log with copies to Cerino. Photocopies of the chronological experimental log relating to human exposures will be given to Cerino for record.

There will be a demonstration of the complete system at 10:00 am on Monday May 19.

cc:
attendees
file

J. Cerino

REVIEW OF SOLID-STATE ANGIOGRAPHY INTERLOCKS

K. Crook

This is the report of the committee [1] set up to review the solid state aspects of the interlocks for the angiography system.

1. General Comments

   a. In general, the conceptual design of the Angiography Personnel Protection Interlock (APPI) system has been carefully thought out and the design implementation is competent and thorough.

   b. We believe that the solid state portions of the interlock system have adequate redundancy for the critical safety functions.

   c. Given the adoption of the recommendations made in this report, we believe the system will be safe for the intended function.

2. Recommendations

   a. Checking of Redundant Interlocks

   implemented.

   We recommend that test switches and indicator lamps be added to permit the testing of the independent, redundant chains and circuits. In particular, (1) the chair motion rotary encoders, (2) the safety shutters and (3) the exposure timers should be capable of independent testing and verification.

   Redundancy checks should be done at regular intervals and before the system is used.

   b. CMOS/TTL Compatibility

   implemented

   Additional pull-up resistors should be installed at the connection points between CMOS and TTL circuits to match TTL output levels to CMOS input levels. One example is J1(TTL) to J6(CMOS).

   c. Timing Resolution

   implemented

   The circuits that determine the minimum speed of the chair have an uncertainty of 1 millisec or as much as 20% error from the preset value. We believe that this is unnecessarily large and recommend that the uncer-

tainty be reduced by at least a factor of 10. As discussed, this can be done by resetting H3 (CD4020) on each load pulse (or by an equivalent method).

d. Protection of Chassis and Switches

The committee recommends that the interlock chassis, the connectors and the cabling associated with the APPI be protected from accidental adjustments, inadvertent modifications or intentional tampering, by locking the racks and cabinets that house the equipment.

This comment applies also the DIP switches that are used to set the minimum scan speed.

e. Thumbwheel Switches

It is recommended that the thumbwheel switch settings be clearly visible to the operator at all times, and that they be protected by a locked front panel.

f. Patient/Diagnostic Mode

There was much discussion and concern as to whether the system could fail or be changed accidentally from the patient to the diagnostic mode while a patient is in the chair. Although this seems unlikely because of the number of simultaneous failures that would have to occur, the committee recommends that you review the circuits to determine if an additional level of security might not be justified. One suggestion is the inclusion of a pressure switch in the patient's chair to prevent the opening of the shutters in the diagnostic mode while the chair is occupied.

g. Weighted Dummy Tests

Although this is not a comment on the interlock circuitry as such, the committee feels that the testing procedure would be more complete and thorough if a weighted dummy were used during the pre-patient test phase. This testing might even extend to actual beam runs with a dummy.

We recommend that you review the pre-patient certification procedures and determine whether the weighted dummy testing would provide a more thorough evaluation of the system.

h. Safety Shutter Operation

Slo-blow fuse
Timer - 1 sec
@ 50V.

Opening the shutters requires a 50V DC source. Once open, the holding voltage drops to 24V. We recommend that the design be modified to reduce the possibility that the 50V level may be applied for too long, thus damaging the solenoid mechanism. Possible solutions include temperature sensing of the solenoid or a time-out on the 50V supply.

3. Other Considerations

A number of other points were discussed during our meetings. These were answered by Bob Hettel and did not result in any recommendations. For completeness, they are listed below.

a. Computer Monitoring

Given that a computer is part of the overall diagnostic facility, the question arose as to whether safety might be enhanced by using data from the computer, such as chair speed and X-ray exposure, to provide additional cross checks and monitoring.

b. Audio Alarms

Would audio alarms be desirable additions to the safety system?

c. Power Supply Crosschecking or Interlocking

Yes there is.

Is there any monitoring of power supplies for proper operation?

d. 54 Series versus 74 Series Logic

Is there a case to be made for using the wider temperature range 54 series TTL family?

e. Relay Drivers

Can a case be made for both source and sink operation of solid state relay drivers?

[1] Review Committee: K. Crook, D. Horelick, H. Smith, R. Cherkassky, J. Fitch, H. Walz, T. Inman, G. Warren.

#4 25-FEB-1987 14:37:21 NEWMAIL
From: SSRL01::CERINO "John Cerino at SSRL."
To: BROWN,HETTEL,WINICK,CERINO
Subj: ANGIOGRAPHY INTERLOCK DISCUSSION

THE ABOVE PEOPLE MET TODAY WITH KEN CROOK OF SLAC I & C GROUP TO DISCUSS THE REVIEW AND IMPLEMENTATION OF THE ANGIOGRAPHY PPS (APPI) SYSTEM FOR HUMAN EXPERIMENTS. THESE ARE MY NOTES.

CROOK AGREED TO PERFORM A REVIEW OF THE SOLID STATE PORTION OF THE INTERLOCK SYSTEM.

CERINO ASKED THAT HE NOT LIMIT HIS EXAMINATION TO ONLY THAT PORTION, BUT TO THE EXTENT POSSIBLE, TO PARTICIPATE IN A FULL SYSTEM APPRAISAL.

CROOK ASSERTED THAT REVIEW SIGN-OFFS SHOULD RELATE TO FORMAL SIGNED REGISTERED DRAWINGS.

THE FOLLOWING LANDMARKS WERE ESTABLISHED:

Press RETURN for more...

MAIL>
#4 25-FEB-1987 14:37:21 NEWMAIL

MARCH 21	FREEZE DESIGNS
APRIL 6	DOCUMENTATION IN FINAL FORM; FINAL REVIEW
APRIL 20	SIGN-OFF OF COMPLETE APPI SYSTEM AND PROCEDURES
APRIL 21	BEGIN HUMAN EXPERIMENTS.

HETTEL DELIVERED NEARLY COMPLETE LOGIC DIAGRAMS FOR CROOK TO REVIEW. THEY WILL MEET IN A WEEK OR SO TO GO DISCUSS THE SYSTEM.

MAIL>

S S R L M E M O R A N D U M

Date: February 10, 1987

TO: DISTRIBUTION

FROM: JOHN CERINO

SUBJECT: ANGIOGRAPHY SAFETY REVIEW MEETING NOTES

ATTENDEES: CERINO, HENDERSON, HETTEL, PIANETTA (part), WINICK (part).

Messrs. Jack Henderson and Clay Sealy were asked by Al Thompson to perform a system safety review of the Angiography Personnel Protection System (APPI) as required by SSRL. We met with them today to discuss the system and the scope of the review.

Both men are experienced in design, fabrication and operation of personnel safety systems at various LBL facilities.

Discussion centered on the four principal aspects of the system to be reviewed: Concept, Logic and Circuit Design, Hardware and Procedures.

The system concept is embodied in the "FRAMEWORK OF ANGIOGRAPHY SAFETY PLAN" by Otis and Thompson.

Henderson and Sealy will study the system function and relay logic. They estimate 1 man-week of effort is required after they receive a Ladder Diagram of the system. Copies of all existing diagrams were given to them.

Review of the solid state logic must be done by others. The effort is estimated at 1 man-week.

The system components were examined in their present state (disassembled). The assembled system will be inspected prior to its use for human experiment.

Copies of the interlock checklist were given to Henderson and Sealy.

Cerino asked that Henderson and Sealy communicate any results of their review to Hettel in a timely manner so that they might be incorporated prior to the April human experiment, and that, after final review and inspection, a report be sent to A. Bienenstock stating their findings.

0021860

The schedule was discussed. It seemed unlikely that everyone could be ready for a full dress rehearsal of the system and procedures before the start of the dedicated run (3/21/87). We expect that the final inspection will take place after the experiment is set up in the hutch (4/10/87 or so).

ACTION ITEMS:

Hettel will provide a Control Diagram (Ladder Diagram) ASAP for Henderson and Sealy.

Cerino will contact Al Thompson to assure that "Framework" is accurate and up-to-date.

Cerino to solicit Ken Crook's help with the review of the solid state logic diagrams. If Ken cannot do it, some LBL help may be available.

Hettel to assure that all electrical connectors are unique so that they cannot be cross connected by mistake.

cc:
BIENENSTOCK
BROWN
CROOK
HENDERSON
HETTEL
PIANETTA
SEALY
THOMPSON
WINICK

0021861

ANGIO FILE

S S R L M E M O R A N D U M

DATE: October 27, 1986

TO: DISTRIBUTION

FROM: JOHN CERINO

SUBJECT: ANGIOGRAPHY SAFETY MEETING NOTES, 10/15/86

ATTENDEES:

ANGIOGRAPHY GROUP: A. THOMPSON, H. ZEMAN.
SSRL: G. BROWN, J. CERINO, R. HETTEL, C. TROXEL, H. WINICK.
SLAC: D. BUSICK, N. IPE, G. NELSON.

Thompson stated that they expect to resume human exposures in the spring of 1987, if SSRL runs then.

A number of system improvements have been requested; some of which are apparently in the works. The following is a list of those tasks whose completion are deemed by the attendees to be necessary before the next human run, and the person responsible to carry them out:

Redesign and rebuild Safety Shutters. (G. Brown)

Redesign and rebuild Patient Chair interlocks and sensors. (G. Brown)

Implement equipment to permit use of patient doors in No Bars mode as well as Angio Test mode. (R. Hettel)

Implement interlock system revisions recommended by Chester Pike. (R. Hettel)

Update the "Framework" document to reflect present planning status. (A. Thompson)

* Arrange for System Safety Analysis. (A. Thompson)

Determine whether further review by the SLAC Radiation Committee will be needed. (J. Cerino)

Assuming a May 1,1987 date for the next human exposure, the group arrived at the following set of milestones for completion of the above tasks:

* BEGIN CONCEPTUAL DESIGN REVIEW	11/15/86
CONCEPTUAL DESIGN COMPLETE	12/01/86
DETAILED DESIGN COMPLETE	01/01/87
INSTALL HARDWARE IN HUTCH	02/01/87

0021862

* HARDWA REVIEW AND INSPECTION	02/15/87
* FINAL SYSTEM SAFETY EVALUATION REPORT	03/01/87
SLAC RAD SAF COMM REVIEW (IF REQUIRED)	04/01/87
PATIENT EXPOSURE	05/01/87

Items in the above list which bear a * are part of a required system safety evaluation to be carried out by an independent third party.

We expect that the Angiography Group will arrange for that review to take place in a timely manner in order to achieve a satisfactory report result according to the schedule above.

dist:
ATTENDEES
A. BIENENSTOCK
A. BOYARSKY
R. HOFSTADTER
E. RUBENSTEIN
G. WARREN

0021863

John-

Re: hutch doors : "back of the envelope" estimate of attenuation for 30 keV photons is that a steel door of 16 gage "skins" (= 1/8" thick total) is about 5 HVL or 1/32 transmission.

The unattenuated amount of scatter from the patient is about 1/3,000 of the primary exposure, measured at 1 m from the pt. Thus, for each frame, the exposure to the Dr. would be no more than:

$$800\,mR \times \frac{1}{3{,}000} \times \frac{1}{32} \cong 8\,\mu R$$

For each pt. = $8 \times 10 = 80\,\mu R$ frames

The Stanford "Guideline" is 500 mR/yr

∴ could do 6,000 pts/yr

∴ lead door is probably unneeded.

Re: window : 1/2" plate glass is about 1/4 transmission

So you'd need about a piece 1 1/4" thick to have window as good as the steel in the door.

Roland

0021864

KC Block
re: Angiography
RC file

SSRL MEMORANDUM

Date: September 5, 1986

TO: PROF. ROBERT HOFSTADTER

FROM: A. BIENENSTOCK

SUBJECT: ANGIOGRAPHY EXPERIMENT PLANS

Dear Bob:

We have received word that your near-term plans do not include further human studies at this time. We are looking forward to the continued development of this technique at SSRL.

We assume that the phantom and dog tests which will be carried on will be done using the standard Hutch Protection System that is implemented on all SSRL hutches.

Further use of the special interlock that was used during the human tests this past spring can only occur after a comprehensive system safety analysis is performed to assure the safety of both patient and researchers. Such analysis can entail several man-weeks of study by experts in fault analysis techniques. I encourage you to initiate that review in ample time to be ready for the next human exposures.

Best wishes. It would be nice if you, Ed, Herman and I could get together at lunch to discuss longer term goals. I am hoping that you will take advantage of PEP to study contrast agents with higher atomic numbers. This would be something special that the Stanford group could do. It could be quite important.

cc: J. Cerino

Arthur

0021865

```
$ type time.ang
Angiography Time Schedule

6 Am Interlock checkout

7 AM Fill for SPEAR

7:20 Run calibration and phantom scan

7:30 Call VA to bring patient

7:40 - 8:00  Run full set of calibration scans

8:00 Do major checklist of all components

8:00 Patient arrives at SSRL

8:30 Run calibration of system and phantom scan

8:40 Position patient in chair

9:00 Run positioning scan number 1

9:10 Run second positioning scan

9:20 Run angiography scan

9:30 Patient moves to lounge chair

9:30 - 10:00 Evaluation of images

10:00 Run calibration scan

10:10 Patient repositioned in chair

10:20 Positioning scan

10:30 Angiography scan

10:30 - 10:50 Evaluation of images

10:50 Calibration of system

11:00 Positioning of patient

11:10 Positoning scan

11:20 Final angiography scan

11:30 Patient leaves SSRL

11:30 Final full calibration of system
```

EXPERIMENTAL LOG for PATIENT STUDY

Day _____ Time _____

Machine
- energy _____ GeV
- current _____ mA
- wiggler field _____ kgauss
- lifetime _____ hours
- check physician display of machine current

Monochromator
- Crystal reflection _____
- stepping motor position _____ steps
- piezo voltage setting _____ volts
- water flow _____ gal/hr

Slit - position settings: 1- _____ 2- _____ 3- _____ 4- _____

Drum
- jack positions 1- _____ 2- _____ 3- _____
- computer speed setting _____ rpm
- gain and phase 1- _____ 2- _____ 3- _____ 4- _____
- speed setting on drum interface _____ rpm
- sync with line OK _____
- output voltage 1- _____ 2- _____ volts

Shutters operational _____

Ionization Chambers
- gas flowing (make sure that it's argon) _____ scfh
- high voltage ON and voltage setting _____ volts
- output current vs machine current linear _____
- manual integral counter reset _____
- physician integrated flux display working _____
- electrometer gains (x10-?) 1- _____ 2- _____
- check that I(safety) and I(Angi) in data _____

Chair
- check zero position correct _____
- is phantom scan in correct position _____
- check position readout to computer _____
- check position alignment system _____

Detector
- thermoelectric cooler ON _____
- vacuum OK _____
- high voltage ON and voltage _____ volts
- calibration checked _____
- gain of detector channels _____
- gain of ionization channel _____

Power Injector
- Renografin 76 loaded _____
- Computer interface OK _____

ECG Machine Operational _____

Radiation survey outside hutch with Beam ON, all shutters OPEN and pig heart positioned in beam < _____ mR/hr

Dose Rate at Patient Chair with Beam ON, Imaging shutter OPEN Drums ON and Safety Shutter CLOSED < _____ mR/hr

Crash Cart Available _____

CALIBRATION SCAN PROTOCOL

Calibration Scans

- NO absorber	Gain _____	Scan #	1- _____	2- _____
- Attenuator 1	Gain _____	Scan #	1- _____	2- _____
- Attenuator 1+2	Gain _____	Scan #	1- _____	2- _____
- Attenuator 1+2+3	Gain _____	Scan #	1- _____	2- _____
- Position Scan Absb	Gain _____	Scan #	1- _____	2- _____

Phantom Scan

- dog heart in position _____
- Interlocks operational _____
- gain of detector _____
- manual scalars reset _____
- Absorber OUT _____
- scan speed _____
- scan number _____

Human Positioning Scan

- Alignment balls : of beamline _____
- Safety system in PATIENT mode _____
- Absorber IN _____
- Chair position correct _____
- Patient positioned in chair OK _____
- Injector NOT armed _____
- ECG heart rate _____ beats/min
- physician integrated flux display reset _____
- manual scalars reset _____
- interlock check
  - Angiography Safety All Interlocks GREEN _____
  - safety shutters enabled _____
  - hutch stoppers OPEN _____
- scanning parameter check
  - gain of detector electronics _____
  - number of frames F= _____
  - scan speed _____ rpm or Rate= _____ cm/sec
  - starting position X= _____ mm
    Y= _____ mm
- Scan number _____
- Electron current _____ mA

- computer ready for scan command _____
- Beam ON _____

during scan

- Keithley voltages Vk(safety) _____ volts
  Va(angi) _____ volts

after scan

- time of day _____
- manual flux scalers Nscal1- _____ Nscal2- _____
  exposure time (2 *10-6)*Nscal1/Vk _____ secs
  Dose(rad) 7.78 * Vk * F/Rate _____ Rads

0021869

Angiography Scan

Description of scan _____

_____

- Safety system in PATIENT mode _____
- Absorber OUT _____
- Chair position correct _____
- Patient positioned in chair OK _____
- Renografin loaded _____
- tubing connected (Y/N) _____
- Injector parameters _____ ml at _____ ml/sec
- Injector ARMED _____
- ECG heart rate _____ beats/min
- physician integrated flux display reset _____
- manual scalars reset _____
- interlock check
  - Angiography Safety All Interlocks GREEN _____
  - safety shutters enabled _____
  - hutch stoppers OPEN _____
- scanning parameter check
  - gain of detector electronics _____
  - number of frames F= _____
  - scan speed _____ rpm or Rate= _____ cm/sec
  - starting position X= _____ mm
    Y= _____ mm
- Scan number _____
- Electron current _____ mA

- computer ready for scan command _____
- Beam ON _____

during scan

- Keithley voltages Vk(safety) _____ volts
  Va(angi) _____ volts

after scan

- time of day _____
- manual flux scalers Nscal1- _____ Nscal2- _____
  exposure time (2 *10-6)*Nscal1/Vk _____ secs
  Dose(rad) 7.78 * Vk * F/Rate _____ Rads

0021870

Calibration/Phantom scans ll be done between each p ent scan

Final Calibration Scans

- NO absorber	Gain _____	Scan #	1- _____	2- _____
- Attenuator 1	Gain _____	Scan #	1- _____	2- _____
- Attenuator 1+2	Gain _____	Scan #	1- _____	2- _____
- Attenuator 1+2+3	Gain _____	Scan #	1- _____	2- _____
- Position Scan Absb	Gain _____	Scan #	1- _____	2- _____

Phantom Scan Parameters

- dog heart in position _____
- Interlocks operational _____
- gain of detector _____
- manual scalars reset _____
- Absorber OUT _____
- scan speed _____
- scan number _____

From: CERINO 22-MAY-1986 09:29
To: K
Subj: ANGIOGRAPHY FILE MATERIAL

BY THE TIME YOU ALL READ THIS, I HOPE THAT WE WILL BE BASKING IN THE GLOW OF THE FIRST SUCCESSFUL HUMAN ANGIOGRAM DONE AT SSRL.

I WANT TO GIVE MY PERSONAL THANKS TO BOB, RAY, CHUCK AND AL FOR THEIR HARD WORK AND COOPERATION TO GET THE SAFETY SYSTEMS IN PLACE. BOB ESPECIALLY ACCOMPLISHED A HUGE TASK IN A SHORT TIME, WITH GREAT GOOD HUMOR. THANK YOU.

THERE ARE A FEW MATTERS WHICH, I BELIEVE, MUST BE ATTENDED TO BEFORE A RERUN OF THIS EXPERIMENT SHOULD TAKE PLACE. SOME RESULT FROM MY OWN OBSERVATIONS DURING THE CHECK-OUT; SOME ARE COMMENTS MADE BY OTHERS WHO HAVE PARTICIPATED IN THE EFFORT ALONG THE WAY. I WANT EACH OF US TO STOP SOON AND NOTE THINGS WHICH HAVE HAPPENED DURING THIS RUN THAT NEED CHANGING OR, AT LEAST DISCUSSION. PLEASE DO IT WHILE THINGS ARE FRESH IN YOUR MIND.

HERE IS MY PRESENT LIST:

LEAD LINING ON SAFETY SHUTTERS; IT IS TAPED IN PLACE AND COULD COME LOOSE AND FOUL THE ACTION OF THE SHUTTER. IT SHOULD BE PROPERLY FASTENED.

THE SCAN TIMER IS OF A DESIGN WHICH IS PRONE TO NOISE SENSITIVITY; ANOTHER DESIGN SHOULD BE CONSIDERED.

I WOULD RECOMMEND THAT THE DRUM MOUNTING BOLTS BE SAFETY WIRED IN PLACE.

THE POSITIONING SCAN BEAM ATTENUATOR MUST BE INSTALLED BY HAND AND IS NOT FASTENED IN PLACE. IT SHOULD BE.

THE PATIENT CHAIR SHOULD BE EQUIPPED WITH LIMIT SWITCHES AND THE WIRING AND MOUNTING OF SENSORS SHOULD BE SECURE.

HUTCH DOOR PROXIMITY SWITCHES HAVE EXPOSED TERMINALS WHICH COULD SHORT AGAINST THE DOOR FRAME.

THERE ARE CONNECTIONS ON THE INTERLOCK WIRING IN THE DRUM TANK WHICH COULD SHORT OUT. THEY SHOULD BE CAREFULLY INSULATED.

THE SAFETY SHUTTER RETURN SPRINGS ARE SEVERELY BENT WHEN IN THE OPEN POSITION, INCREASING THE LIKELIHOOD OF FATIGUE FAILURE. THE CONNECTION SHOULD BE IMPROVED.

FINALLY, THE BEAM CONTROL AND SAFETY SYSTEMS SHOULD HAVE AN INTENSIVE EXAMINATION BY AN OUTSIDE EXPERT; BOTH LOGICAL AND HARDWARE. THAT IS, I HAVE BEEN TOLD, A COUPLE OF MAN-MONTHS OF WORK. IF THIS EXPERIMENT WANTS TO RETURN IN THE FALL, WE ARE ALREADY ON THE CRITICAL PATH WITH THIS TASK.

I SUSPECT THAT THERE ARE SEVERAL SIMILAR ITEMS THAT EACH OF YOU COULD POINT OUT. PLEASE DO SO AN GIVE THEM TO ME.

AS THE NOVELTY OF THIS EXPERIMENT WEARS OFF, WE WILL RELY MORE

0021812

AND MORE ON THE PERFORMANCE OF THE SAFETY SYSTEMS TO ASSURE THE SAFETY OF THE PATIENTS AND THE EXPERIMENTERS. THESE LITTLE DETAILS MATTER.

THANKS AGAIN.

JOHN

0021873

BRANCH LINE AUTHORIZATION: 4-2 HUTCH: ANGIOGRAPHY

DATE:

HUTCH INSPECTION

1. MONOCHROMATOR

_____ Upstream and downstream beam stop in place in mono housing

_____ Mono housing B-locked closed (2 B locks)

_____ Mono table B-locked in place (proper table feet positions marked on floor)

2. DRUM/SHUTTER HOUSING

_____ Imaging Shutter in place

_____ Safety Shutters (2) in place with lead secured to each Shutter vane (4)

_____ Two tension springs for each Safety Shutter are in place

_____ Drums in place and rotate smoothely

_____ Drum/Shutter housing B-locked in place

3. HUTCH DIVIDER PANELS

_____ Three panels B-locked in place

_____ Slide panel ~~open~~ present and open

4. ANGIOGRAPHY ROOM

_____ Search/Reset box in place

_____ Warning Radiation sign in place

_____ Rear panel exit window open

_____ Emergency lighting system in place and operable

_____ Swinging doors and door stops in place

_____ Detector B-locked behind rear hutch panel window

0021874

5. ELECTRICALLY MOVING CHAIR

_____ Chair in place with no obstructions

_____ Electrical connections and wiring

6. PPS INTERLOCK CHECK

_____ Angiography Personnel Protection Interlock has been tested

7. DRUM/SHUTTER HOUSING ACCESS PLATES

_____ Drum/Shutter housing access plates B-locked in place

Health Physicist: _____ Date: _____

SSRL Operations: _____ Date: _____

ANGIOGRAPHY PERSONNEL PROTECTION INTERLOCK CHECK

1. CONTROL PANELS (Digital Chassis, Relay Chassis, Operator Panel)

   _____ Indicator lights

   _____ Electrical connectors

   _____ Scan Switch mechanical operation

2. SWINGING DOORS

   _____ Mechanical operation

   _____ Status switch alignment

   _____ Status switch wiring

3. SAFETY SHUTTERS

   _____ Status switch alignment

   _____ Status switch wiring, connectors and cable harness

   _____ Mechanical operation (inspect during operational check of section 5 following)

4. ANNUNCIATOR LIGHTS

   _____ Patient/Diagnostic light

   _____ Warning Radiation light in rear hutch

0021876

5. DIAGNOSTIC MODE OPERATION

With Hutch Stoppers closed, verify the proper functioning of the following operational sequences:

Srch Timer	Srch Button	Swing Doors	Hutch WrnRad	Scan Sw	Op Pan RadWrn	Shutr OpReq	Shutr Status	
off	off-on	cl	off	off	off	on	cl	
off	off	cl	off	push	off	on	cl	
on-off	off	cl	off	push during & after Srch Timer	off	on	cl	
on-off	on	op	on-off	"	off	on	cl	
on-off	on	cl	on	" , latched on after Srch Tim	on after Srch Tim	on	op after Srch Tim	

With Scan Switch latched on (active), Operator Panel Rad Warn light:

_____ flashes when Safety Shutters closed

_____ is steady on when Safety Shutters open

With Scan Switch latched on (active), Safety Shutters closed:

_____ Open swinging door turns off Scan Switch

<u>Interlock</u> <u>Faults</u> (chains A and B):

_____ Emergency Stop Buttons (2)

_____ Opening each swinging door (2) with Safety Shutters open

_____ Fault terminates and inhibits Search Timer

_____ Fault resets Scan Switch if it is on

_____ Fault closes and inhibits the opening of both Safety Shutters

_____ Fault closes and inhibits the opening of both Hutch Stoppers used for the BL IV-2 Hutch Protection System

6. PATIENT MODE OPERATION

With Hutch Stoppers closed, verify the proper functioning of the following operational sequences:

Srch Timer	Swing Doors	Scan Sw	Op Pan RadWrn	Expos Timer	Chair Motion	Shutr Op Req	Shutr Status	
off	cl	off	off	off	off	on	cl	
off	cl	off	off	off	on	on	cl	
off	cl	push	off	off	on	on	cl	
on-off	cl	push after Srch Timer	flash-off	off	on	on	cl	
on-off	cl	push during Srch Timer	flash	on after Srch Tim	off	on	cl	
on-off	op	"	flash	"	on	on	cl	
on-off	cl	"	flash-steady	"	on	on	op after Srch Tim	

With Scan Switch on, Chair Motion on, Exposure Timer on, Operator Rad Warn light:

_____ flashes when Safety Shutters closed

_____ is steady on when Safety Shutters open

With Scan Switch on, Chair Motion on, Exposure Timer on,

_____ after Exposure Timer times out, it cannot be re-started until a new Search cycle is started

<u>Interlock Faults</u> (chains A and B):

_____ Emergency Stop Buttons (2)

_____ Open each swinging door with Safety Shutters open

_____ Release Scan Switch with Safety Shutters open

_____ Chair Motion off with Safety Shutters open (causes Chair Interlock Fault on both the Digital and Relay Interlock Panels)

_____ Exposure Timer off with Safety Shutters open (usually only one chain will fault because timers are not exactly matched)

_____ Logic Fault if chains A and B Chair Motion detectors do not agree (unplug and replug connector J3 from Digital Chassis)

_____ Fault terminates and inhibits Search Timer

_____ Fault closes and inhibits opening of both Safety Shutters

_____ Fault closes and inhibits opening of both Hutch Stoppers used for the BL IV-2 Hutch Protection System

7. PRELIMINARY SYSTEM CHECKS

Since the most recent installation of the interlock system:

_____ A complete interlock checkout that tests system redundancy has been satisfactorily completed

_____ The BL IV-2 ring dump button has been tested and seen to extinguish SPEAR beam

8. TIMER PERIODS

_____ Search Timer set between 10 and 15 seconds

_____ Exposure Timers (A and B) set to _____ seconds

_____ Chair Motion interlocks (A and B) cause faults with Safety Shutters open and chair speed less than _____ cm/sec as measured with a stopwatch

SSRL PPS Rep: _____ Date: _____

SSRL Operations Safety Rep: _____ Date: _____

Angiography Team Rep: _____ Date: _____

Chron
cc: Gough

STANFORD SYNCHROTRON RADIATION LABORATORY

May 21, 1986

To: W. Gough

From: A. Bienenstock

Subject: Angiography experiment

Dear Bill:

o Angiography: A meeting was held at SSRL on May 19, 1986 to clarify SAN's position on angiography experiments at SSRL. It was agreed by all the participants that the hazard rating of the experiment itself is "low" and that the human subject health and safety would fall under the "Human Subject Committee" responsibility.

0021880

cc: Cerino
Angio file

STANFORD SYNCHROTRON RADIATION LABORATORY

May 21, 1986

TO: W. Gough, Director
DOE Stanford Site Office

FROM: A. Bienenstock, Director A. Bienenstock

SUBJECT: Safety Analysis of the Non-invasive Angiography Experiment

Enclosed is the Safety Analysis Review package for the non-invasive angiography research program to be performed at SSRL on Branch Line IV-II. The analysis of safe radiation doses is the purview of the Medical School's Committee for the Protection of Human Subjects in Research, whose approval letter of April 1, 1986 is enclosed.

We report, therefore, on the other aspects of the system (interlocks, chair, etc.) necessary to assure the safety of the patient. Our analysis, performed by SSRL Safety Office J. Cerino, indicates that the risk to the patient is low.

The SLAC Radiation Committee, as discussed in the enclosed memo of April 15, 1986 from SLAC Director B. Richter, reviewed and approved the proposed experiment. Its review was aimed at seeing that devices and procedures were in place to assure that the subject did not get an accidental dose beyond that planned as part of the experiment itself.

Hence, I have concluded that the hazard classification of this facility is low, and have authorized performance of the experiments.

0021881

S S R L M E M O R A N D U M

Date: May 16, 1986

TO: A. BIENENSTOCK

FROM: JOHN CERINO

SUBJECT: ANGIOGRAPHY SYSTEM OPERATIONAL REVIEW

The following persons met today to review the human angiography operation and procedures:

From SLAC: J. Jasberg, G. Nelson, G. Warren;
From SSRL: J. Cerino, R. Hettel, C. Troxel
From Angiography Group: A. Thompson.

The specific objectives of the group were to:

1. Examine each identifiable hazard to the human research subject, and identify the specific mitigation of it;

2. Establish the operational and check-out procedures necessary to assure safe operation.

Using a fault tree drafted by Cerino, the group conducted the review and generated the following action items:

1. At least 1 physician will be in attendance; the exposure will be performed by a California licensed Radiologist, who will be the person to actually operate the Scan Switch.

2. An attempt will be made by Troxel to improve the hutch ventilation. He will install an emergency light in the patient portion of the hutch.

3. The patients will be acquainted with the emergency exit location of Bldg 131 and be told the sound of the fire alarm.

4. The complete interlock and control system, in its final configuration, will be cycled 100 times without failure before the first human exposure.

5. Hettel and Troxel will develop a check-out protocol for the interlock system and it will be performed by one of them prior to each new patient exposure. Subsequent to that check-out no access will be permitted to the monochromator or drum/shutter tank until the human exposure is complete. A signed record of the check will be made.

6. There will be a one-time calibration of the beam monitors against TLD's. Prior to each patient exposure a cross check of the 2 monitors and the SPEAR beam current will be made.

7. Al Thompson presented a draft experimenter check list for review. The check-out will be performed by 2 members of the experimental team prior to each new patient exposure. A signed record of the check will be maintained in the experimental log with copies to Cerino. Photocopies of the chronological experimental log relating to human exposures will be given to Cerino for record.

There will be a demonstration of the complete system at 10:00 am on Monday May 19.

cc:
attendees
file

DATE: April 16, 1986

TO: Edward Rubenstein, M.D.
Department of Medicine

FROM: Kathy McClelland
Human Subjects Committee

SUBJECT: Assurance approval

Stanford University has an approved assurance with the Department of Health and Human Services for a period of five years. The assurance identification number is M 1272, and our institutional review board's identification numbers are 01XB and 02XM. Our assurance will expire December 31, 1989 and a new assurance will be negotiated prior to this date.

Please let me know if I can furnish any more information that you may need.

cc: Bill Wilken
SLAC

MEDICAL COMMITTEE FOR THE PROTECTION OF HUMAN SUBJECTS IN RESEARCH

1985-1986

Name	Department and Area of Expertise
Carlos A. Camargo, M.D. Associate Professor (Clinical)	Medicine Endocrinology
William T. Clusin, M.D. Assistant Professor	Medicine Cardiology
John Dodson Reverend	Public Member
Don R. Goffinet, M.D.,Chairman Associate Professor	Radiology Radiation Therapy and Cancer Research
Kathy Hoare, DNS	Nursing Administration
Sharon Kotabe, Pharm.D. Supervisor	Stanford Pharmacy
Jean Kutner	Student Human Biology
Kathy McClelland	Staff Coordinator
David Oakes, M.D. Associate Professor (Clinical)	Surgery General Surgery
Elwood C. Pierce Director of Operations	Administration
Carole Runyan Price Associate Director Stanford University Hospital	Staff Legal Representative
Peter Rosenbaum, M.D. Professor	Psychiatry Schizophrenia & Psychotherapy
Hans Steiner, M.D. Physician Specialist Clinical Asst. Professor	Psychiatry Child Psychiatry Adolescent Psychiatry & Eating Disorders
David Stevenson, M.D. Associate Professor	Pediatrics Neonatology
George Tidmarsh	Student M.D. Program

J. Cerino

RECEIVED
APR 16 1986
SSRL

SLAC MEMORANDUM April 15, 1986

TO: A. Bienenstock

FROM: B. Richter

SUBJECT: Dichromography Experiment

Dear Artie,

This memo concerns the approval of SSRL proposal 456 "Iodine Dichromography with Monochromatic X-ray Beams for Angiography." As you know, the memorandum of understanding and agreement between SLAC and SSRL gives the responsibility for safety at SSRL to SLAC. The dichromography experiment proposes to expose human subjects to synchrotron radiation as part of a medical experiment to test a procedure that may be inherently more accurate and safer than the procedure currently used to diagnose problems with partially blocked blood vessels. Thus the safety issues in this experiment involve medical issues such as dose rate, exposure, etc., as well as the usual issues of radiation safety that are reviewed in the analysis of typical experiments.

The SLAC radiation committee has reviewed this proposal. It's review was aimed at seeing that devices and procedures were in place to assure that the subject did not get an accidental dose beyond that planned as part of the experiment itself. Various modifications to apparatus and procedures were required, and I understand that these have now been implemented. Recently the last analysis required for this experiment, the ray trace analysis, has been received by Gary Warren, analyzed by him and approved. With this the work of the radiation committee is complete.

The final element required for the approval of this proposal is the approval by the University's panel on experimentation on human subjects. Our safety office has just received a copy of the approval by this panel, and so you have our permission to proceed.

BR:k

Burt

cc: A. Boyarski
G. Warren
E. Rickansrud
W. C. Gough

0021886

 OFFICE MEMORANDUM STANFORD UNIVERSITY

→ Prof A. Bienenstock
SSRL

DATE: April 1, 1986

TO: R. Hofstadter, M.D.,
E. Rubenstein, M.D., D.C. Harrison,
J. Giacomini, M.D. & H. Gordon, M.D.,
Department of Medicine

FROM: Chairman, Medical Committee for the
Protection of Human Subjects in Research

PROTOCOL ENTITLED:
Revision of: K-edge Angiography with Synchrotron X-rays.
Grant title: K-edge Subtraction Angiography with Synchrotron X-rays.

The Committee approved human subject involvement in your research project on April 1, 1986.

The expiration date of this approval is January 6, 1987. If this project is to continue beyond that date, please submit an updated proposal in advance for the Committee's re-approval. If this proposal is used in conjunction with any other human experimentation or if it is modified in any way, it must be re-approved for these special circumstances. In addition, the Committee requests prompt notification of any complications which may occur during any experimental procedure.

All continuing projects and activities must be reviewed and re-approved at least annually by the Committee. Committee approval of any project is for a maximum period of one year. It is the responsibility of the investigator to resubmit the project to the committee for annual review.

for Kathy McClelland
Don R. Goffinet, M.D., Chairman

cc: Sponsored Projects
Marshall O'Neill

Funding Agency: (NIH HL29024; NIH HV38039; DOE DE-AT03-84ER60200)
Period of Time: 04/01/86-01/06/87
Investigational New Drugs: N, N/A
Investigational New Device: Y,
Cooperating Institution: N

0021887

DATE: February 24, 1986

TO : Professors Edward Rubenstein, Donald Harrison, and Robert Hofstadter

FROM : Roland Finston
Health Physics

SUBJECT: Research subject radiation exposure from K-edge Angiography with Synchrotron X rays.

Thank you for your letter of February 11 and the revised consent form (draft of Feb. 12). Now that the specifics of the patient imaging protocol have been defined, an estimate of the radiation exposure can be made. I use the following assumptions to describe the typical study:

Entrance field size	—	12 cm wide x 12 cm high
Projections, # frames	—	lateral, 7 frames
		LAO, 2
		RAO, 2
Entrance skin exposure	-	391 mR/frame (8.3 msec/line)

The skin exposure per frame, as you note in the consent form, is similar to that from a standard radiograph of the heart. The assessment of risk is properly directed to the most radiosensitive organs: bone marrow, thyroid, breast (female), and lung. The data of Rosenstein* are available for calculating the dose to bone marrow and thyroid. In consultation with Dr. Giacomini the location of the beam on the skin for each projection has been defined. The resulting calculations show a mean bone marrow dose of 32 mrad, and a thyroid dose of less than 2 mrad. As for the lung dose, there is only a small fraction of this organ in the field of view. The mean lung dose is believed to be about 100 mrad. For female subjects, provided that the breast tissue is either on the exit side of the body (e.g. the beam inters from the posterior side) or entirely outside the field of view (for lateral project.), the mean breast dose is estimated to be less than 100 mrad as well.

The radiation exposure from the study may be compared to that from natural background. In this case the mean marrow dose (32 mrad) is the best comparison and that is the same as it receives in 4 months from natural sources**. The radiation exposure may also be compared to that in the alternative diagnostic X-ray test, the coronary arteriogram. The entrance skin exposure and field size is quite similar to that from a single cine run of 10 seconds duration (several such runs are usually

---

*Marvin Rosenstein, "Organ Doses in Diagnostic Radiology", HEW Publication (FDA) 76-8030, May, 1976.

**This value, 4, should be used at pg 2, line 16 of the revised consent form.

needed in the typical arteriograpm procedure). The absolute risk of malignancy resulting from the organ dose estimates given above is a chance of less than one in 30,000 subjects.

I believe that this information, along with the details of the protocol and modified consent form, should be submitted to the Institutional Review Committee for their evaluation and approval.

RAF/eh
cc: JMBrown/SM(M) Committee member to review X-ray Dose/Risk Estimate
WmHMarshall / ditto

0021889

REVISION

protocol #

REQUEST FOR INSTITUTIONAL APPROVAL OF PROJECT INVOLVING HUMAN SUBJECTS AT RISK
THE MEDICAL COMMITTEE FOR THE USE OF HUMAN SUBJECTS IN RESEARCH

To: Kathy McClelland, 851 Welch Rd., #115 (X5244) Date: March 6, 1986

PI for Grant/Project: Robert Hofstadter MD/PhD Title: Professor
Other Investigators: Edward Rubenstein, M.D. MD/PhD Professor (Clin
Donald C. Harrison, M.D. MD/PhD Professor

Title of Research Project: K-edge Angiography with Synchrotron X-rays

(AND GRANT, IF DIFFERENT) K-edge Subtraction Angiography with Synchrotron X-rays

Contract/Grant # 1 R01 HL29024-01-A1 Sponsor NIH Grant Period 7/1/83-6/30/86
1 HV-38039 NIH Contract 7/1/83-6/30/86
DE-AT03-84ER60200 DOE Grant 2/1/84-1/31/87

Investigator's Address Rm. TC-129 Dept. Medicine Ext. 7-7188

Sponsored X Unsponsored ____ Investigational Drug ____ Investigational Device ____
IND # ____ IDE # ____

Department Chairman Signature: Edward Rubenstein for Donald Harrison

REVIEW PROCESS - Check One: REGULAR REVIEW ____ PLEASE SEND 4 COPIES TOTAL (DO NOT STA

EXPEDITED REVIEW ____ PLEASE SEND 2 COPIES (See regulations
(VA Not Eligible) on reverse side of this form)
____ Paragraph number under which expedited review is requested.

APPROVAL OF THE HUMAN SUBJECTS COMMITTEE SHOULD BE OBTAINED PRIOR TO SUBMISSION OF THE RESEARCH PROJECT TO HHS/NIH. THE COMMITTEE MEETS THE FIRST TUESDAY OF EVERY MONTH AND REVISION APPLICATIONS SHOULD REACH THE COMMITTEE 15 DAYS PRIOR TO THE MEETING DATE.

PLEASE PROVIDE INFORMATION IN THE FOLLOWING AREAS AND ATTACH TO THIS FORM:

1. Describe Any Changes Since Original Approval.

2. Attach the Consent Form(s) You are Using for this Study.
(Even if it is the same as previously approved.)

2/86

Approval Dat

0021890

REVISION

Request for Institutional Approval of the Protocol Entitled:
"K-Edge Subtraction Angiography with Synchrotron X-rays"

Additional Information:

1. Describe Any Changes Since Original Approval.

The consent form has been modified to provide more detailed information about risks related to the venous catheterization procedure and to the radiation exposure. Corrected parameters for contrast agent administration have been provided.

A report from Roland Finston is appended in which he provides additional information regarding radiation exposure.

2. Consent forms are attached.

FILE

DATE: February 11, 1986

TO: Roland Finston, Director
Health Physics

FROM: Edward Rubenstein, Robert Hofstadter and Donald Harrison

SUBJECT: Research Project: K-edge Angiography with Synchrotron Radiation

Thank you for your willingness to participate in the review of the radiation safety issues involved in the synchrotron-radiation-based angiography project at SSRL.

We would like to respond to the questions you raise in your memo of February 11, 1986.

The original protocol documents submitted to the Human Subjects Committee were based on data available at that time. We now are able to make better estimates of the parameters related to exposure to X-radiation.

The images will be recorded in a line-by-line process, each recording constituting a frame. The horizontal dimension of each frame is that of the synchrotron radiation beam, which is 123 mm. The vertical dimension of the frame will vary depending upon the size of the patient, but will usually be from 10-15 centimeters.

For coronary angiography, we currently plan to record images in three projections: lateral, left anterior oblique and right anterior oblique. The precise angles of the oblique projections will be determined by the coronary artery anatomy as established on arteriograms done by the conventional method in the recent past on each patient.

In the initial studies, a sequence of frames will be recorded to establish the flow characteristics of the bolus of contrast agent. This will probably require five to seven frames, taken with the patient in one position. Thereafter, one or two frames will be recorded with the patient in the other two positions.

The parameters that determine the scan speed are the detector element size (0.5 X 0.5 mm), the velocity of cardiac motion, and the x-ray flux. We currently plan to record images either at a rate of 4 msec per line or 8 msec per line, depending upon the available electron current in the storage ring and on the patient's heart rate.

The patient consent form has been amended to include the information suggested under item #2 in your memo of February 11th; see attached.

The physicians who will operate the x-ray exposure control apparatus are holders of the permit of the State of California entitled "X-ray Supervisor and Operator."

Images will not be recorded on employees or on other normal subjects. The synchrotron radiation beam is highly collimated naturally but is further restricted in size by collimators that constitute part of the imaging system. The expected radiation exposure for a patient will be measured with an appropriate dosimeter.

We would be grateful to have your comments about the above and to respond to any further suggestions or questions.

ER/aw

bcc: D.C. Harrison
R. Hofstadter

Attached: Informed Consent 2/13/86

4/24/86

INFORMED CONSENT FOR SYNCHROTRON ANGIOGRAPHY BY MEANS OF VENOUS INJECTION OF CONTRAST AGENT

RECEIVED
MAY 12 1986
SSRL

You are invited to participate in a study of angiography. You have already undergone angiography by the conventional method, involving arterial catheterization and the direct injection of contrast agents into the arteries. We hope to develop a means of visualizing these arteries without the necessity of physically entering them with needles and tubes. In the presently proposed technique, the contrast agent is injected into veins, instead of arteries, a procedure that is believed to be substantially safer.

If you decide to participate, we will perform an angiographic procedure (coronary, cerebral, other,) by means of a venous injection of contrast agent, employing x-rays produced at the Stanford Synchrotron Radiation Laboratory. You will be given injections into a vein of a radiographic contrast agent, as employed in routine clinical practice. The injection may be given directly into a vein in the arm or may be given into a vein in the chest. In the latter instance a flexible, hollow tube, called a catheter, will be inserted into a vein in an extremity or the neck, and the catheter is then advanced into the chest so that its tip is in a central vein adjacent to the intake chamber (right atrium) of the heart. The contrast agent will then be administered using a power injector, at a rate up to 20 ml/sec and at a dose of up to 0.75 ml/kg of body weight per injection. Following the injection, scanning digital radiographs will be

0021894

taken of the arteri structures being studied. The procedure will probably require 1/2 to 1 1/2 hours. The risks of this procedure include the following: severe allergic (anaphylactoid) reaction to the iodine contrast agent; mechanical tear of a vein; local bleeding; impaired kidney function; reaction to local leakage of dye. The procedure involves minor surgery and entering the blood vessels with special plastic tubes. Leakage or irritation at the site of blood vessel entry may cause local discomfort. Among the complications of the procedure are blood clots, irregularities of the heart beat, heart attack and death. The likelihood of the serious complications is believed to be less than 0.5 percent.

There are risks related to radiation exposure inherent in any x-ray examination, including delayed cancer and genetic change. The exposure from this examination will carry with it a risk equivalant to that from approximately 4 months of natural background radiation. In this examination, approximately eight to ten radiographs (x-ray pictures) will be recorded, and the x-ray exposure of each is similar to the exposure involved in an ordinary x-ray picture of the heart region.

It would be impractical and even misleading to describe in detail all of the possible risks and complications which might result from the procedure. Any questions should be discussed with a member of the angiography team who will be performing the study. This person will review the procedure as is planned for your individual case.

Potential benefits that may be accrued to you relate to information about

0021895

the status of th rteries to be studied. Such i mation might be accumulated without the necessity of performing invasive arterial injections. We can not and do not guarantee or promise that you will receive any benefits from this study.

Any data that may be published in scientific journals will not reveal the identity of the subjects. In the interest of public safety, patient information will be provided to federal and regulatory agencies as required.

There will be no fee charged for the non-invasive angiogram.

Your decision whether or not to participate will not prejudice you or your medical care. If you decide to participate, you are free to withdraw your consent and to discontinue your participation at any time without prejudice to you or effect on your medical care. If you have any questions, we expect you to ask us. If you have any additional questions later, we will be pleased to try to answer them.

In the event of physical injury that arises solely out of the negligence of the employees of Stanford University or of the Stanford University Medical Center or its staff in this study, reimbursement for expenses incurred for necessary medical treatment and hospitalization is available. For further information, please call 497-5244 or write the Medical Center Committee for the Protection of Human Subjects at 851 Welch Road, Room 115, Palo Alto, California, 94304. In addition, if you

0021896

are not satisfied :h the manner in which this stı . is being conducted, you may report any complaints to the same telephone number and address.

Persons who participate in a medical experiment are entitled to certain rights. These rights include but are not limited to the subject's right to: be informed of the nature and purpose of the experiment; be given an explanation of the procedures to be followed in the medical experiment, and any drug or device to be utilized; be given a description of any attendant discomforts and risks reasonably to be expected; be given an explanation of any benefits to the subject reasonably to be expected, if applicable; be given a disclosure of any appropriate alternatives, drugs, or devices that might be advantageous to the subject, their relative risks and benefits; be informed of the avenues of medical treatment, if any, available to the subject after the experiment if complications should arise; be given an opportunity to ask any questions concerning the experiment or the procedures involved; be instructed that consent to participate in the medical experiment may be withdrawn at any time and the subject may discontinue participation without prejudice; be given a copy of the signed and dated consent form; and be given the opportunity to decide to consent or not to consent to a medical experiment without the intervention of any element of force, fraud, deceit, duress, coercion or undue influence on the subject's decision.

YOUR SIGNATURE INDICATES THAT YOU HAVE READ AND UNDERSTAND THE ABOVE INFORMATION, THAT YOU HAVE DISCUSSED THIS STUDY WITH THE PRINCIPAL INVESTIGATOR(S) AND/OR HIS OR HER STAFF, AND THAT YOU HAVE DECIDED TO

0021897

PARTICIPATE BASED [illegible] THE INFORMATION PROVIDED. A [illegible]Y OF THIS FORM IS AVAILABLE TO YOU UPON REQUEST.

Signature [illegible] Date

Signature of Investigator or Witness

0021898

CC: Angio

May 20, 1986

To: Robert Hofstader

From: A. Bienenstock

Subject: Angiography Project

Dear Bob:

I am quite concerned that modifications to both software and hardware for the angiography experiment are being made less than 3 days prior to the exposure of the first human patient. It is my belief that there must be a 48 hour period in which the final hardware and software is tested prior to that exposure.

I am also concerned that the absence of a participating radiologist may lead to the failure to consider important patient safety matters.

Finally, I am anxious that there be a designated spokesperson available for discussions in the last, important days before the exposure.

Consequently, I am requiring that the following conditions be fulfilled prior to the first human exposure.

1. That there be no hardware or software modifications to the system in the 48 hour period prior to the first patient scan.

2. That a complete set of documentation, including circuit diagrams, shop drawings and all computer code, be on file with SSRL 24 hours prior to first human patient.

3. That a certified radiologist review, at a minimum, the medical procedures involved.

4. That a spokesman for the overall project, who has at least 60% of his time committed to the project, be available to provide authoritative and timely information to SSRL.

5. That a review meeting with myself, Reuben Yotam, Bob Hettel, John Cerino, and the above spokesperson, as well as perhaps other designated SSRL personnel, be conducted each day prior to the first human patient scan.

6. That I inform the project spokesperson in writing when I am satisfied that this project is ready to proceed with a human patient.

In addition, I recommend that the patient visit the facility at least 24 hours prior to the scan and be familiarized with the process.

0021899

Angiography file.

RECEIVED
MAY 23 1986
SSRL

17 May 1986

Dr. John Cerino
Bin 69
Stanford Linear Accelerator Center
P.O. Box 4349
Stanford, CA 94305

Dear John:

This is to confirm and amplify upon on our telephone conversation of 16 May 1986.

During our telephone conversation of 16 May 1986 you ask me if I felt it would be possible to approve or sign off on the Angiograph Safety System. My response was no. I stated that the system may be safe but several things bothered me which will be outlined below:

1. Earlier versions of the one-shots used for timing were known for "hanging up." This information was given to R. Hettel and associates on 15 May 1986 along with the Fairchild application notes that warned of this condition.

2. The installation specifications used for mounting the interlock switches are unknown. Most, if not all, manufacturers give detailed information regarding over-travel, mounting position, and mounting techniques.

3. Due to the complexity of the system and the difficulty in reading and understanding the prints, it was impossible to do a failure analysis in the period of time that we have been able to devote. This subject will be addressed in detail later.

4. The components were at, or near the peak of their infant failure rate. The results of an undetected failure would be hazardous if another failure occurred.

5. It was not known if certain exclusive "or" circuits had been installed to detect a single channel failure. That was my fault because I forgot to ask when talking to R. Hettel on 15 May 1986.

6. I was still concerned because the "Beam Stopper indicator switches were all routed through one connector. The failure of this single connector could by-pass the Angiograph Safety System. You indicated that this would be corrected.

7. Inspection of the imaging shutter at an earlier date had shown splices which were not completely insulated. All of the wiring and connections to safety interlock switches needed to be inspected and all wiring verified. At this time you inquired about running the system with people standing by the SPEAR Crash-Off Switch and the Deadman Switch (Safety

Shutter Switch). These people would be using stop watches to time the exposure and would manually turn the system off if there was a failure of the chair motion or the exposure did not terminate at the proper time. My response, as I remember, was a bit of hesitation. I then stated that it was an accepted practice at SLAC to work on energized hazardous equipment, if there were no other options, with a suitable number of knowledgeable people as back-up personnel to de-energize the equipment. In some ways this was no different. Again asked if I would approve this operation I responded that it was up to you. Though not said, I felt that this was beyond any authority I might have, and was at the discretion of SSRL management. While I realize that there were only to be three (3) patients with three (3) exposures each and that the physician was responsible for the total dose they received and that this was in the nature of an experiment I had other reservations regarding the equipment which were not stated at the time. These reservations are:

1. To my knowledge the whole system had never been run using dummy weights for patients thereby checking out the chair motion detetector under various loads.

2. The system would be put into operation at a time when there would be a lot of stress on the responsible engineer who would have just finished debugging the system and might be more prone to make mistakes.

3. During the debug period things are modified, at this time it is very easy for undetected errors to be incorporated into a design that are not obvious until something goes wrong. I realize that you were disappointed that a sign off was not possible and that there is some pressure to do an important experiment for SSRL. To do a complete fault analysis of the system would require much more than the 40 hours each that A. Turney and I were able to devote during a rather short period of time considering that we both have full time responsibilities to LBL. I did not realize the complexity of the task as it was described to me over the telephone. Only after we got into it did it become evident that this was a very complex system with more than the usual hazard to human beings. Since no account numbers had been set up, we had to charge our time to our projects. In fact, E.C. Hartwig, Head, Electronic Department of the Engineering Division paid for Art Turney's time while I charged my time to the Accelerator and Fusion Division. I furnish all travel to and from SSRL. I regret that I did not have the full scope of what was required in the beginning. If I had, I would have given you an estimate of our time availability and would have requested that an account be set up to collect charges. It is our normal practice to help other facilities with reasonable amounts of effort on a gratis basis but this one is just too large to do without approval from our group leaders and department heads. We, of course, welcome the opportunity to assist you in any way that we can. Please call me if there is anything I can do in the future on this fascinating project. A few days on occasion can be arranged with little trouble, longer periods of time will require different arrangements.

Very truly yours,

Chester D. Pike

Chester D. Pike

0021901

S S R L M E M O R A N D U M

Date: May 16, 1986

TO: A. BIENENSTOCK

FROM: JOHN CERINO

SUBJECT: ANGIOGRAPHY SYSTEM OPERATIONAL REVIEW

The following persons met today to review the human angiography operation and procedures:

From SLAC: J. Jasberg, G. Nelson, G. Warren;
From SSRL: J. Cerino, R. Hettel, C. Troxel
From Angiography Group: A. Thompson.

The specific objectives of the group were to:

1. Examine each identifiable hazard to the human research subject, and identify the specific mitigation of it;

2. Establish the operational and check-out procedures necessary to assure safe operation.

Using a fault tree drafted by Cerino, the group conducted the review and generated the following action items:

1. At least 1 physician will be in attendance; the exposure will be performed by a California licensed Radiologist, who will be the person to actually operate the Scan Switch.

2. An attempt will be made by Troxel to improve the hutch ventilation. He will install an emergency light in the patient portion of the hutch.

3. The patients will be acquainted with the emergency exit location of Bldg 131 and be told the sound of the fire alarm.

4. The complete interlock and control system, in its final configuration, will be cycled 100 times without failure before the first human exposure.

5. Hettel and Troxel will develop a check-out protocol for the interlock system and it will be performed by one of them prior to each new patient exposure. Subsequent to that check-out no access will be permitted to the monochromator or drum/shutter tank until the human exposure is complete. A signed record of the check will be made.

6. There will be a one-time calibration of the beam monitors against TLD's. Prior to each patient exposure a cross check of the 2 monitors and the SPEAR beam current will be made.

7. Al Thompson presented a draft experimenter check list for review. The check-out will be performed by 2 members of the experimental team prior to each new patient exposure. A signed record of the check will be maintained in the experimental log with copies to Cerino. Photocopies of the chronological experimental log relating to human exposures will be given to Cerino for record.

There will be a demonstration of the complete system at 10:00 am on Monday May 19.

cc:
attendees
file

Chet Pike — tel con 5/16 08:20

Did give detailed look —

Didn't like —

Motion detector — susceptible to hanging up

Exposure timers — 1 shot (noise & hang-up)

Change timing — requires chassis access.

Corrective redundancy —

① Dry run each time
② Wire by wire inspection of system.
③ Hardware —

Switches mounting instructions — have they been followed.

Informal reliability note

Is the redundancy checkable ?

Ability to fault each chain independently.

→ Do SPEAR Dump initially.

0021904

① 2 ~~radiologist~~ physicion in attendance; ① lic. radiologist, crash cart; defibrilator

② Fire procedure.

③ Physical Injury —

Horizontal motion - is it monitored.
Steps to help patient up to chair.

Need to make pre-exposure examination of hatch/chair

Hatch ventilation — reverse fan direction - keep doors open except when exposing.

Emergency light - proximity. Install in hatch.

④ Radiation —

Pb beam dump in place. 2 places. (~~Tomo~~) each access to mono. box.

Exposure times — need to set based on flux rate measurements. Order of 30 secs. Test each exp.

Scan switch — Life test; test each exposure.

Scan switch operation by physicion only.

Chair motion indicator —

Stroke is determined by the computer program.

Set speed trip to 3 cm/sec.

0021905

$ TYPE CHEK.LST
Wed May 14/5PM

Patient log book will have medical information ?

Experimental log book will have:

Day/Time
Machine
- energy
- current
- wiggler field
- lifetime
- check physician display of machine current

Monochromator
- stepping motor position
- piezo voltage setting
- water flow

Slit - 4 position settings

Drum
- 3 jack positions
- speed settings
- gain and phase setting
- sync with line
- output voltage

Shutters operational

Ionization Chambers
- gas flowing (make sure that it's argon)
- high voltage ON and voltage setting recorded
- output current vs machine current
- manual integral counter reset
- check physician display of integrated flux and reset
- electrometer gains
- check that in phantom scan that I(safety) and I(Angi) are in data

Chair
- is zero position correct
- in phantom scan in correct position
- check position readout to computer
- check position alignment system

Detector
- thermoelectric cooler ON
- high voltage ON and voltage recorded
- vacuum OK
- calibration checked
- gain settings of all channels

Power Injector
- Renografin 76 loaded

Crash Cart Available

SCAN PROTOCOL

Calibration

- using several different thickness of absorber and several gain settings of the analog electronics acquire at least 2 calibration runs at each setting.

Phantom Scan

- position dog heart in standard position
- Absorber OUT
- Interlocks operational
- manual scalars reset
- scan speed set correctly

Positioning Scan

- Absorber IN
- Chair position correct
- Patient positioned in chair OK
- Injector NOT armed
- ECG operational
- check physician display of integrated flux and reset
- manual scalars reset
- interlock check
  - ?????
- scanning parameter check
  - starting position
  - number of image channels
  - Io channel number
  - number of frames
- Scan number correct
- computer ready for scan command
- Beam ON

Angiography Scan

- Absorber OUT
- Chair position correct
- Patient positioned in chair OK
- Renografin loaded
- tubing connected
- Injector parameters correct and logged
- Injector ARMED
- ECG operational
- check physician display of integrated flux and reset
- manual scalars reset
- interlock check
  - ?????
- scanning parameter check
  - starting position
  - number of image channels
  - Io channel number
  - starting time of frames
  - number of frames
- Scan number correct
- computer ready for scan command
- Beam ON

Calibration/Phantom scans will be done between each patient scan

Final calibration runs (like initial calibration runs)

- using several different thickness of absorber and several gain settings of the analog electronics acquire at least 2 calibration runs at each setting

0021901

- doors OK
- motion detector
- timer active

RaDIATION SAFETY
- Pb shielding in place
- background dose measured

Gary Warren

1;1fJ MAIL #66
From:CERINO 14-MAY-1986 13:03
To:HETTEL,THOMPSON,TROXEL,CERINO
Subj:ANGIOGRAPHY SYSTEM OPERATIONAL REVIEW

AT 10:00 AM ON THIS FRIDAY, MAY 16 WE WILL MEET TO PERFORM A FULL ANGIOGRAPHY OPERATIONAL REVIEW.

THIS REVIEW WILL CONSTITUTE THE SYSTEM SAFETY ANALYSIS WHICH, TOGETHER WITH CHET PIKE'S INTERLOCK CIRCUIT ANALYSIS, WILL SUPPORT ARTIE'S APPROVAL TO PROCEED WITH THE HUMAN SUBJECT EXPOSURES.

IT WILL ALSO DETERMINE THE OPERATIONAL PROTOCOLS FOR ASSURANCE THAT
IT WILL ALSO DETERMINE THE OPERATIONAL RPOTOCOLS FOR ASSURING THAT
THE SYSTEM HARDWARE IS FUNCTIONING PRIOR TO EACH HUMAN EXPOSURE.

I HAVE RESERVED THE 120 CONFERENCE FROM 10:00 TO 12:00 ALTHOUGH I EXPECT WE MAY WANT TO BE AT THE EXPERIMENTAL STATION FOR MUCH OF THIS PROCESS. PLEASE SET ASIDE SUFFICIENT TIME FOR TO COMPLETE THIS SESSION. THANK YOU.

Press RETURN for more...

MAIL|
1;1fJ MAIL #66

JOHN

PS: I UNDERSTAND THAT IT WAS DECIDED AT TODAY'S STAFF MEETING THAT A 5/19 EXPOSURE IS UNREASONABLE BASED UPON TODAY'S STATUS. AL, CAN YOU CONFIRM THAT THIS IS YOUR UNDERSTANDING?

MAIL| ex
$

lo
CERINO logged out at 14-MAY-1986 13:07:41.27

0021909

(F)

1. Specially developed at SSEL under DOE + PHS funding

2. Research equipment cannot be used for anything other than this.

* 5/12 11:30

Talked with Ms. Hall. We agreed that probably Hofstadter should write the above for the experimental apparatus.

She will call back if she needs me for SSEL.

JK

Phyllis Hall 3-3638

0021910

RECEIVED
MAY 7 1986
SSRL

May 2, 1986

TO : Art Bienenstock

FROM : Reuben Yotam

SUBJECT : Angiography System

Dear Art,

From discussions with various members in SSRL I got the impression that the use of our bright x-ray sources for angiography has a promising potential, and may lead to better diagnostic methods.

The EE group is designing and building the controls for the PPS , a system to detect the movement of the "moving chair", and an interface to the control computer. The work is done in cooperation with Al Thompson from Berkeley and under the safety guidlines of SLAC and John Cerino. We are in the final stages of the work, and hopefully will meet Thompson's schedule.

My concern is the schedule for tests on human subjects. The week of May 14 - May 19 is scheduled for an experiment on dogs, and the following week is scheduled for an experiment on a human subject.

One can claim that we gained experience with the angiography system doing experiments on dogs over the past years. But this is a NEW SYSTEM, and no one has done work with the same system.

I don't believe that any physician/researcher should agree to take the responsibility for any type of experiments on human subjects using a NEW SYSTEM after only one week of experiments on a dog.

Knowing a little bit of the world of medicine, such a rush into experiments on human subjects may produce difficulties for SSRL.

In my opinion SSRL should discuss this issue with our co-researchers from the Stanford School of Medicine and recommend a new series of experiments on animals. Let the researchers gain experience on the new system, and let the system prove itself for more than " one week of experiments on a dog ". Only after full agreement and satisfaction from all the parties should we begin experiments on human subjects.

Sincerely,

Reuben Yotam

Reuben Yotam

copies: G. Brown
J. Cerino
R. Gould
B. Hettel
B. Wilken

0021911

4/24/86

INFORMED CONSENT FOR SYNCHROTRON ANGIOGRAPHY BY MEANS OF VENOUS INJECTION OF CONTRAST AGENT

RECEIVED
MAY 12 1986
SSRL

You are invited to participate in a study of angiography. You have already undergone angiography by the conventional method, involving arterial catheterization and the direct injection of contrast agents into the arteries. We hope to develop a means of visualizing these arteries without the necessity of physically entering them with needles and tubes. In the presently proposed technique, the contrast agent is injected into veins, instead of arteries, a procedure that is believed to be substantially safer.

If you decide to participate, we will perform an angiographic procedure (coronary, cerebral, other,) by means of a venous injection of contrast agent, employing x-rays produced at the Stanford Synchrotron Radiation Laboratory. You will be given injections into a vein of a radiographic contrast agent, as employed in routine clinical practice. The injection may be given directly into a vein in the arm or may be given into a vein in the chest. In the latter instance a flexible, hollow tube, called a catheter, will be inserted into a vein in an extremity or the neck, and the catheter is then advanced into the chest so that its tip is in a central vein adjacent to the intake chamber (right atrium) of the heart. The contrast agent will then be administered using a power injector, at a rate up to 20 ml/sec and at a dose of up to 0.75 ml/kg of body weight per injection. Following the injection, scanning digital radiographs will be

0021912

taken of the a erial structures being studied. The procedure will probably require 1/2 to 1 1/2 hours. The risks of this procedure include the following: severe allergic (anaphylactoid) reaction to the iodine contrast agent; mechanical tear of a vein; local bleeding; impaired kidney function; reaction to local leakage of dye. The procedure involves minor surgery and entering the blood vessels with special plastic tubes. Leakage or irritation at the site of blood vessel entry may cause local discomfort. Among the complications of the procedure are blood clots, irregularities of the heart beat, heart attack and death. The likelihood of the serious complications is believed to be less than 0.5 percent.

There are risks related to radiation exposure inherent in any x-ray examination, including delayed cancer and genetic change. The exposure from this examination will carry with it a risk equivalant to that from approximately 4 months of natural background radiation. In this examination, approximately eight to ten radiographs (x-ray pictures) will be recorded, and the x-ray exposure of each is similar to the exposure involved in an ordinary x-ray picture of the heart region.

It would be impractical and even misleading to describe in detail all of the possible risks and complications which might result from the procedure. Any questions should be discussed with a member of the angiography team who will be performing the study. This person will review the procedure as is planned for your individual case.

Potential benefits that may be accrued to you relate to information about

0021913

the status of the arteries to be studied. Such information might be accumulated without the necessity of performing invasive arterial injections. We can not and do not guarantee or promise that you will receive any benefits from this study.

Any data that may be published in scientific journals will not reveal the identity of the subjects. In the interest of public safety, patient information will be provided to federal and regulatory agencies as required.

There will be no fee charged for the non-invasive angiogram.

Your decision whether or not to participate will not prejudice you or your medical care. If you decide to participate, you are free to withdraw your consent and to discontinue your participation at any time without prejudice to you or effect on your medical care. If you have any questions, we expect you to ask us. If you have any additional questions later, we will be pleased to try to answer them.

In the event of physical injury that arises solely out of the negligence of the employees of Stanford University or of the Stanford University Medical Center or its staff in this study, reimbursement for expenses incurred for necessary medical treatment and hospitalization is available. For further information, please call 497-5244 or write the Medical Center Committee for the Protection of Human Subjects at 851 Welch Road, Room 115, Palo Alto, California, 94304. In addition, if you

0021914

are not satis_ed with the manner in which this study is being conducted, you may report any complaints to the same telephone number and address.

Persons who participate in a medical experiment are entitled to certain rights. These rights include but are not limited to the subject's right to: be informed of the nature and purpose of the experiment; be given an explanation of the procedures to be followed in the medical experiment, and any drug or device to be utilized; be given a description of any attendant discomforts and risks reasonably to be expected; be given an explanation of any benefits to the subject reasonably to be expected, if applicable; be given a disclosure of any appropriate alternatives, drugs, or devices that might be advantageous to the subject, their relative risks and benefits; be informed of the avenues of medical treatment, if any, available to the subject after the experiment if complications should arise; be given an opportunity to ask any questions concerning the experiment or the procedures involved; be instructed that consent to participate in the medical experiment may be withdrawn at any time and the subject may discontinue participation without prejudice; be given a copy of the signed and dated consent form; and be given the opportunity to decide to consent or not to consent to a medical experiment without the intervention of any element of force, fraud, deceit, duress, coercion or undue influence on the subject's decision.

YOUR SIGNATURE INDICATES THAT YOU HAVE READ AND UNDERSTAND THE ABOVE INFORMATION, THAT YOU HAVE DISCUSSED THIS STUDY WITH THE PRINCIPAL INVESTIGATOR(S) AND/OR HIS OR HER STAFF, AND THAT YOU HAVE DECIDED TO

PARTICIPATE [illegible]SED ON THE INFORMATION PROVIDED. A COPY OF THIS FORM IS AVAILABLE TO YOU UPON REQUEST.

Signature [illegible] Date

Signature of Investigator or Witness

0021916

1;1fJ
From:THOMPSON 22-APR-1986 12:19
To:CERINO,YOTAM,HETTEL
Subj:Angiography Schedule

MAIL #49

Our tentative schedule for the angiography run in May is:

1. April 24 - April 28

   - monchromator testing

   - detector, drum and chair installation

   - initial system tests

2. April 30 - May 5

   - safety system installation

   - testing of drum and chair systems

3. May 7 - May 12

   - Testing of all safety system interlocks

   - calibration of x-ray flux

Press RETURN for more...

MAIL½
1;1fJ

MAIL #49

   - imaging tests with phantoms

4. May 14 - May 19

   - Testing of complete imaging system and scanning protocol.

   - Imaging of dog.

   - Evaluation of system performance at different scanning speeds using phantoms.

5. May 22 - May 26

   - Imaging of coronary arteries of human subject.

This schedule is of coarse only tentative since there

0021917

is a lot of equipment to make work.

In general we plan to give priority to getting the safety system installed and therefore we will work at night if the day shift is needed to wire the hutch.

The cooperation of the SSRL staff has been outstanding. We realize and appreciate the extra effort that many staff

Press RETURN for more...

MAIL½
1;1fJ

MAIL #49

members are making.

MAIL½
%MAIL-E-NOMOREMSG, no more messages

MAIL½

lo
%MAIL-E-INVCMD, unrecognized command 'LO'

MAIL½ ex
$ lo
CERINO logged out at 22-APR-1986 14:28:03.86

0021918

April 21, 1986

System Fault Tree

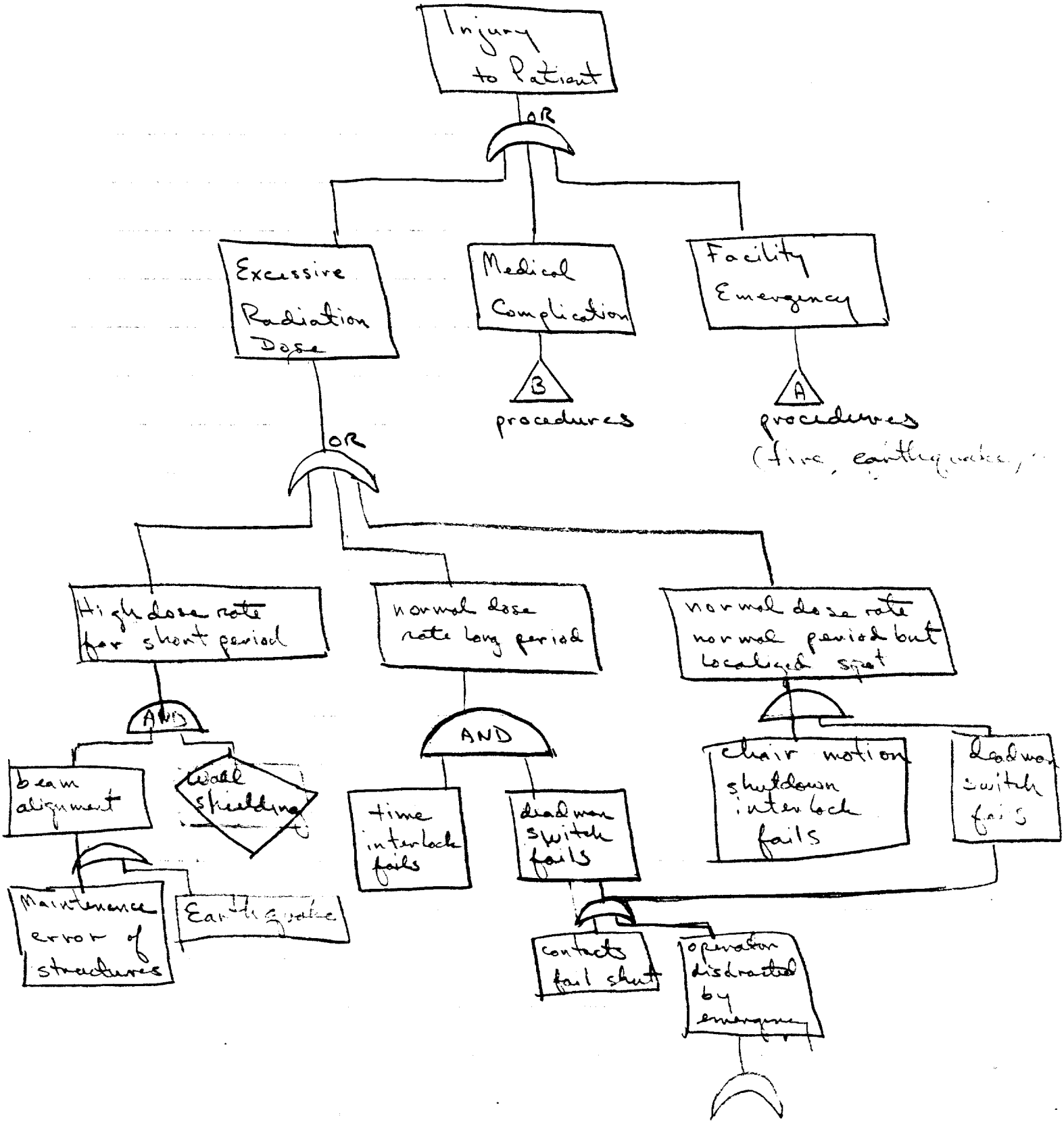

0021919

Bienenstock

STANFORD SYNCHROTRON RADIATION LABORATORY

P.O. Box 4349, Bin 69
Stanford, California 94305
(415) 854-3300 Ext. 2874
Telex: 348 402 STANFRD STNU

RECEIVED
APR 16 1986
SSRL

1;1fJ MAIL #1
From:CERINO 16-APR-1986 08:39
To:A,WILKEN,GOUGH,CAROL,CERINO
Subj:ANGIOGRAPHY MATERIAL

CAROL WILL BE SENDING YOU COPIES OF CORRESPONDENCE BETWEEN ROLAND FINSTON OF STANFORD OHP AND RUBENSTEIN WHICH FOLLOW UP ON FINSTON'S 2/11 MEMO OBSERVATIONS ABOUT THE CONSENT MATERIAL.

ENCLOSED ALSO IS A REVISED CONSENT PACKAGE WHICH HAS BEEN SUBMITTED TO THE HUMAN SUBJECTS COMMITTEE OF STANFORSD MEDICAL.

AS YOU WILL SEE, THIS TOOK PLACE PRIOR TO THE COMMENTS MADE BY DOE ESQA. THOSE COMMENTS HAVE BEEN PASSED ON TO THE ANGIOGRAPHY GROUP ONLY MONDAY. NO RESPONSE HAS YET BEEN MADE TO THEM.

PLEASE REVIEW THE MATERIAL AND THINK IF IT ANSWERS ANY OR ALL OF THE OUTSTANDING MATTERS WHICH HAVE BEEN RAISED.

THANK YOU.

Press RETURN for more...

MAIL|
1;1fJ MAIL #1

CC: G. WARREN SLAC ESO

MAIL|

cc: S. Brown
J. Cerino

RECEIVED
APR 16 1986
SSRL

SLAC MEMORANDUM April 15, 1986

TO: A. Bienenstock

FROM: B. Richter

SUBJECT: Dichromography Experiment

Dear Artie,

This memo concerns the approval of SSRL proposal 456 "Iodine Dichromography with Monochromatic X-ray Beams for Angiography." As you know, the memorandum of understanding and agreement between SLAC and SSRL gives the responsibility for safety at SSRL to SLAC. The dichromography experiment proposes to expose human subjects to synchrotron radiation as part of a medical experiment to test a procedure that may be inherently more accurate and safer than the procedure currently used to diagnose problems with partially blocked blood vessels. Thus the safety issues in this experiment involve medical issues such as dose rate, exposure, etc., as well as the usual issues of radiation safety that are reviewed in the analysis of typical experiments.

The SLAC radiation committee has reviewed this proposal. It's review was aimed at seeing that devices and procedures were in place to assure that the subject did not get an accidental dose beyond that planned as part of the experiment itself. Various modifications to apparatus and procedures were required, and I understand that these have now been implemented. Recently the last analysis required for this experiment, the ray trace analysis, has been received by Gary Warren, analyzed by him and approved. With this the work of the radiation committee is complete.

The final element required for the approval of this proposal is the approval by the University's panel on experimentation on human subjects. Our safety office has just received a copy of the approval by this panel, and so you have our permission to proceed.

BR:k

Burt

cc: A. Boyarski
G. Warren
E. Rickansrud
W. C. Gough

0021921

MEMORANDUM April 11,1986

TO : R. Hofstadter

FROM : A. Bienenstock

SUBJECT : Angiography Experiment at SSRL

I want to be sure that everything is in order before we proceed with the experimentation on humans at SSRL. In recent staff and directorate meetings I have found enough uncertainty that I believe a joint meeting is necessary to discuss outstanding issues which may demand attention before experimentation can take place. I suggest a small group of SSRL staff attend your regular Tuesday meeting on the Angiography project on April 22. If this is satisfactory with you please advise us of the time and place. If you would like to meet at SSRL we will be happy to make arrangements. Please ask your secretary to confirm with Shirley Robinson at 280-3153.

0021922

U.S. DEPARTMENT OF ENERGY
Stanford Site Office (SLAC/SSRL)
Energy Research Division/SAN
Stanford University
P.O. Box 4349 - BIN 8A
Stanford, California 94305

COMM: (415) 854-3300
X2261
FTS: (8) 415-470-9040

RECEIVED
APR 11 1986
SSRL

April 10, 1986

Dr. Arthur Bienenstock, Director
Stanford Synchrotron Radiation Lab
Building 120 - BIN 69
2575 Sand Hill Road
Menlo Park, CA 94025

Subject: SSRL Prop. #456 "Iodine Dichromography with Monochromatic X-ray Beams for Angiography"

Dear Artie,

I have enclosed the memo to me from Jim Davis, Director of ESQA/SAN on the above subject. Since this project has the potential to be one of the most visible SSRL projects with possible great benefits to the general public, I strongly suggest that you implement the recommendations of Jim as soon as possible.

Sincerely,

William C. Gough

William C. Gough, Director
Stanford Site Office (SLAC/SSRL)
ER Division, SAN

cc: Jim Davis, ESQA/SAN (w/o enclosure)
Bob Marianelli, ER-14
Ed Temple, ER-65
Dick Nolan, ER/SAN

M11/ART.MEM

0021923

DOE F 1325.8
(12-84)

SSRL 284-2

United States Government

memorandum

RECEIVED APR 08 1986

Department of Energy

DATE: April 8, 1986

REPLY TO ATTN OF: ESQA

SUBJECT: SSRL Prop. #456 "Iodine Dichromography with Monochromatic X-ray Beams for Angiography"

TO:

Bill Gough, Director, SSO/ER

ESQA has reviewed the information you forwarded to us on the subject proposal. It is likely that the requirements of 10CFR745 have been met. We believe the necessary safety precautions are being taken. We do offer the two comments below for your consideration.

It is recommended that the existence of an "approved general assurance" on file with the Department of Health and Human Services be verified and that a copy be obtained.

In discussions with Dr. Jim Robertson of the Office of Health and Environmental Research (OHER ER-70), it became clear that the aspect of "informed consent" is extremely important. It is recommended that the informational paper to the patient clearly outline any differences between the synchrotron radiation protocol and the normal procedures, such as the difference in radiation dose. It is also suggested that guidance on informed consent be solicited from OCC and OHER.

James T. Davis, Director
Environment, Safety and
Quality Assurance Division

0021924

STANFORD SYNCHROTRON RADIATION LABORATORY

April 10, 1986

TO: J. Cerino

FROM: A. Bienenstock

SUBJECT: Angiography Experiment

Enclosed is a copy of a Safety Analysis Review System Documentation Form. Bill Gough believes that we should do one of these for the angiography experiment.

In addition, enclosed is a memo from James T. Davis to Bill Gough which is also about the angiography experiment. Please refer to the second and third paragraphs. In the second, they call for a copy of an "approved general assurance" form. Can you take care of that?

Note that the third paragraph deals with "informed consent". I would appreciate it if you would discuss this with Dr. Rubenstein to assure that we and the patient get copies of the informational paper discussed in that paragraph.

Enclosures

Arto

0021925

DEFENSE PROGRAMS DIVISION
FILE # 2.5.131
INITIAL

SAFETY ANALYSIS REVIEW SYSTEM DOCUMENTATION FORM

This form records the safety analysis review process required by DOE 5481.1A

1. SAFETY ANALYSIS DOCUMENT TITLE AND DATE: Building 131 Safety Analysis Report, November 1984

2. THIS DOCUMENT DESCRIBES:

☐ NEW FACILITY ☒ EXISTING FACILITY ☐ ENTIRE PROGRAM

☐ MAJOR MODIFICATION

3. DOE 5481.1A HAZARD CLASSIFICATION

☐ HIGH ☒ MODERATE ☐ LOW ☐ EXCLUDED

4. CONTRACTOR LLNL

☒ Approval of Safety Documents

☐ Authorization to Operate New/Modified Facility

L. Lynn Cleland
Reviewed by: Lynn Cleland
Dep. Prog. Ldr., Technical Services
12-15-84
Date

Walter F. Arnold
Approved by for H. C. McDonald
Associate Director for Engineering
12-6-84
Date

5. FIELD OFFICE SAN

☒ Concurrence with Attached Safety Documents

☒ Authorization to Operate New/Modified Facility

Vernon Anderson
Reviewed by:
16 Nov 1985
Date

Ludwig F. Bredemann
Line Program Official
7 November 1985
Date

6. HQ PROGRAM OFFICE

☐ Concurrence with Attached Safety Documents

☐ Authorization to Operate New/Modified Facility

002192b

Reviewed by:

Line Program Official

DOE F 1325.8
(12-84)

United States Government

Department of Energy

memorandum

DATE: April 8, 1986

REPLY TO
ATTN OF: ESQA

SUBJECT: SSRL Prop. #456 "Iodine Dichromography with Monochromatic X-ray Beams for Angiography"

TO:

Bill Gough, Director, SSO/ER

ESQA has reviewed the information you forwarded to us on the subject proposal. It is likely that the requirements of 10CFR745 have been met. We believe the necessary safety precautions are being taken. We do offer the two comments below for your consideration.

It is recommended that the existence of an "approved general assurance" on file with the Department of Health and Human Services be verified and that a copy be obtained.

In discussions with Dr. Jim Robertson of the Office of Health and Environmental Research (OHER ER-70), it became clear that the aspect of "informed consent" is extremely important. It is recommended that the informational paper to the patient clearly outline any differences between the synchrotron radiation protocol and the normal procedures, such as the difference in radiation dose. It is also suggested that guidance on informed consent be solicited from OCC and OHER.

James T. Davis, Director
Environment, Safety and
Quality Assurance Division

FTS 233-5355
COMM 353

0021927

OFFICE MEMORANDUM STANFORD UNIVERS FFICE MEMORANDUM STANFORD RSITY OFFICE MEMORANDU

DATE: April 7, 1986

TO: R. Hofstadter, M.D., E. Rubenstein, M.D., D.C. Harrison, M.D., J. Giacomini, M.D. & H. Gordon, M.D., Department of Medicine

FROM: Kathy McClelland, Coordinator
Human Subjects Committee
703 Welch Road, Suite G-1

a.7.

SUBJECT: Protocol entitled: Revision of: K-edge Angiography with Synchrotron X-rays.
Grant title: K-edge Subtraction Angiography with Synchrotron X-rays.

The Human Subjects Committee has reviewed your research protocol and has the following verbatim comments:

1. How is what happens for study participants different than what would happen if they merely had arteriography?

2. This needs to be highlighted in the consent.

3. Early in the consent, they need to know they're agreeing to have two procedures (probably).

Please send me your comments and revised consent form (4 copies with changes highlighted) for further consideration.

Thank you for your cooperation.

RECEIVED
APR 10 1986

0021928

DATE: April 8, 1986

TO :Kathy McClelland, Coordinator
Human Subjects Committee, 703 Welch Road, Suite G-1

FROM :R. Hofstadter, Ph.D., E. Rubenstein, M.D., D.C. Harrison, M.D., J. Giacomini, M.D. & H. Gordon, M.D.

SUBJECT: Protocol entitled: Revision of: K-edge Angiography with Synchrotron X-rays
Grant title: K-Edge Subtraction Angiography with Synchrotron X-rays

Dear Ms. McClelland:

This is in response to the memo of April 7, 1986. We have revised the Consent Form to make it clear that the study participant has already undergone conventional arteriography and is now being invited to participate in a study involving transvenous arteriography.

The candidate participants are not being asked to undergo two procedures, inasmuch as all subjects in this study are individuals who have already undergone arteriography by the conventional method.

The introductory paragraph has been revised and the last sentence in paragraph 1 of page 3 has been deleted.

Thank you for your continuing advice and assistance.

ER/aw

Enclosure

4/8/86

INFORMED CONSENT FOR SYNCHROTRON ANGIOGRAPHY BY MEANS OF VENOUS INJECTION OF CONTRAST AGENT

You are invited to participate in a study of angiography. You have already undergone angiography by the conventional method, involving arterial catheterization and the direct injection of contrast agents into the arteries. We hope to develop a means of visualizing these arteries without the necessity of physically entering them with needles and tubes. In the presently proposed technique, the contrast agent is injected into veins, instead of arteries, a procedure that is believed to be substantially safer.

If you decide to participate, we will perform an angiographic procedure (coronary, cerebral, other,) by means of a venous injection of contrast agent, employing x-rays produced at the Stanford Synchrotron Radiation Laboratory. You will be given injections into a vein of a radiographic contrast agent, as employed in routine clinical practice. The injection may be given directly into a vein in the arm or may be given into a vein in the chest. In the latter instance a flexible, hollow tube, called a catheter, will be inserted into a vein in an extremity or the neck, and the catheter is then advanced into the chest so that its tip is in a central vein adjacent to the intake chamber (right atrium) of the heart. The contrast agent will then be administered using a power injector, at a rate up to 20 ml/sec and at a dose of up to 0.75 ml/kg of body weight per injection. Following the injection, scanning digital radiographs will be

taken of the arterial struc [illegible] being studied. The procedu [illegible] probably require 1/2 to 1 1/2 hours. The risks of this procedure include the following: severe allergic (anaphylactoid) reaction to the iodine contrast agent; mechanical tear of a vein; local bleeding; impaired kidney function; reaction to local leakage of dye. The procedure involves minor surgery and entering the blood vessels with special plastic tubes. Leakage or irritation at the site of blood vessel entry may cause local discomfort. Among the complications of the procedure are blood clots, irregularities of the heart beat, heart attack and death. The likelihood of the serious complications is believed to be less than 0.5 percent.

There are risks related to radiation exposure inherent in any x-ray examination, including delayed cancer and genetic change. The exposure from this examination will carry with it a risk equivalant to that from approximately 4 months of natural background radiation. In this examination, approximately eight to ten radiographs (x-ray pictures) will be recorded, and the x-ray exposure of each is similar to the exposure involved in an ordinary x-ray picture of the heart region.

It would be impractical and even misleading to describe in detail all of the possible risks and complications which might result from the procedure. Any questions should be discussed with a member of the angiography team who will be performing the study. This person will review the procedure as is planned for your individual case.

Potential benefits that may be accrued to you relate to information about

0021931

the status of the eries be studied. Such inf ation ght be accumulated without the necessity of performing invasive arterial injections. We can not and do not guarantee or promise that you will receive any benefits from this study.

Any data that may be published in scientific journals will not reveal the identity of the subjects. In the interest of public safety, patient information will be provided to federal and regulatory agencies as required.

There will be no fee charged for the non-invasive angiogram.

Your decision whether or not to participate will not prejudice you or your medical care. If you decide to participate, you are free to withdraw your consent and to discontinue your participation at any time without prejudice to you or effect on your medical care. If you have any questions, we expect you to ask us. If you have any additional questions later, we will be pleased to try to answer them.

In the event of physical injury that arises solely out of the negligence of the Stanford University Medical Center or its staff in this study, reimbursement for expenses incurred for necessary medical treatment and hospitalization is available. For further information, please call 497-5244 or write the Medical Center Committee for the Protection of Human Subjects at 851 Welch Road, Room 115, Palo Alto, California, 94304. In addition, if you are not satisfied with the manner in which

this study is being nduc , you may report any cc aint o the same telephone number and address.

Persons who participate in a medical experiment are entitled to certain rights. These rights include but are not limited to the subject's right to: be informed of the nature and purpose of the experiment; be given an explanation of the procedures to be followed in the medical experiment, and any drug or device to be utilized; be given a description of any attendant discomforts and risks reasonably to be expected; be given an explanation of any benefits to the subject reasonably to be expected, if applicable; be given a disclosure of any appropriate alternatives, drugs, or devices that might be advantageous to the subject, their relative risks and benefits; be informed of the avenues of medical treatment, if any, available to the subject after the experiment if complications should arise; be given an opportunity to ask any questions concerning the experiment or the procedures involved; be instructed that consent to participate in the medical experiment may be withdrawn at any time and the subject may discontinue participation without prejudice; be given a copy of the signed and dated consent form; and be given the opportunity to decide to consent or not to consent to a medical experiment without the intervention of any element of force, fraud, deceit, duress, coercion or undue influence on the subject's decision.

YOUR SIGNATURE INDICATES THAT YOU HAVE READ AND UNDERSTAND THE ABOVE INFORMATION, THAT YOU HAVE DISCUSSED THIS STUDY WITH THE PRINCIPAL INVESTIGATOR(S) AND/OR HIS OR HER STAFF, AND THAT YOU HAVE DECIDED TO

0021933

PARTICIPATE BASED ON THE INFORMATION PROVIDED. A COPY OF THIS FORM IS AVAILABLE TO YOU UPON REQUEST.

_____ _____

Signature Date

_____

Signature of Investigator or Witness

11/81

0021934

REVISION

protocol #

REQUEST FOR INSTITUTIONAL APPROVAL OF PROJECT INVOLVING HUMAN SUBJECTS AT RISK
THE MEDICAL COMMITTEE FOR THE USE OF HUMAN SUBJECTS IN RESEARCH

To: Kathy McClelland, 851 Welch Rd., #115 (X5244) Date: March 6, 1986

PI for Grant/Project: Robert Hofstadter MD/PhD Title: Professor
Other Investigators: Edward Rubenstein, M.D. MD/PhD Professor (Clinical)
Donald C. Harrison, M.D. MD/PhD Professor

Title of Research Project: K-edge Angiography with Synchrotron X-rays

(AND GRANT, IF DIFFERENT) K-edge Subtraction Angiography with Synchrotron X-rays

Contract/Grant # 1 R01 HL29024-01-A1 NIH Grant 7/1/83-6/30/86
1 HV-38039 Sponsor NIH Contract Period 7/1/83-6/30/86
DE-AT03-84ER60200 DOE Grant 2/1/84-1/31/87

Investigator's Address Rm. TC-129 Dept. Medicine Ext. 7-7188

Sponsored x Unsponsored ____ Investigational Drug ____ Investigational Device ____
IND # ____ IDE # ____

Department Chairman Signature: Edward Hofstadter
Per L Samuel

REVIEW PROCESS - Check One: REGULAR REVIEW ____ PLEASE SEND 4 COPIES TOTAL (DO NOT STAPLE)

EXPEDITED REVIEW ____ PLEASE SEND 2 COPIES (See regulations
(VA Not Eligible) on reverse side of this form)
____ Paragraph number under which expedited review is requested.

APPROVAL OF THE HUMAN SUBJECTS COMMITTEE SHOULD BE OBTAINED PRIOR TO SUBMISSION OF THE RESEARCH PROJECT TO HHS/NIH. THE COMMITTEE MEETS THE FIRST TUESDAY OF EVERY MONTH AND REVISION APPLICATIONS SHOULD REACH THE COMMITTEE 15 DAYS PRIOR TO THE MEETING DATE.

PLEASE PROVIDE INFORMATION IN THE FOLLOWING AREAS AND ATTACH TO THIS FORM:

1. Describe Any Changes Since Original Approval.

2. Attach the Consent Form(s) You are Using for this Study.
(Even if it is the same as previously approved.)

REVISION

Request for Institutional Approval of the Protocol Entitled:
"K-Edge Subtraction Angiography with Synchrotron X-rays"

Additional Information:

1. Describe Any Changes Since Original Approval.

   The consent form has been modified to provide more detailed information about risks related to the venous catheterization procedure and to the radiation exposure. Corrected parameters for contrast agent administration have been provided.

   A report from Roland Finston is appended in which he provides additional information regarding radiation exposure.

2. Consent forms are attached.

INFORMED CONSENT FOR SYNCHROTRON ANGIOGRAPHY BY MEANS OF VENOUS INJECTION OF CONTRAST AGENT

You are invited to participate in a study of angiography. We hope to develop a means of visualizing arteries without the direct injection into the arteries of x-ray contrast agents. You were selected as a possible participant in this study because your physician(s) has recommended that you undergo angiography by the invasive technique, involving arterial catheterization and the direct injection of contrast agents into the arteries.

If you decide to participate, we will perform an angiographic procedure (coronary, cerebral, other,) by means of a venous injection of contrast agent, employing x-rays produced at the Stanford Synchrotron Radiation Laboratory. You will be given injections into a vein of a radiographic contrast agent, as employed in routine clinical practice. The injection may be given directly into a vein in the arm or may be given into a vein in the chest. In the latter instance a flexible, hollow tube, called a catheter, will be inserted into a vein in an extremity or the neck, and the catheter is then advanced into the chest so that its tip is in a central vein adjacent to the intake chamber (right atrium) of the heart. The contrast agent will then be administered using a power injector, at a rate up to 20 ml/sec and at a dose of up to 0.75 ml/kg of body weight per

0021937

injection. Following the injection, scanning digital radiographs will be taken of the arterial structures being studied. The procedure will probably require 1/2 to 1 1/2 hours. The risks of this procedure include the following: severe allergic (anaphylactoid) reaction to the iodine contrast agent; mechanical tear of a vein; local bleeding; impaired kidney function; reaction to local leakage of dye. The procedure involves minor surgery and entering the blood vessels with special plastic tubes. Leakage or irritation at the site of blood vessel entry may cause local discomfort. Among the complications of the procedure are blood clots, irregularities of the heart beat, heart attack and death. The likelihood of the serious complications is believed to be less than 0.5 percent.

There are risks related to radiation exposure inherent in any x-ray examination, including delayed cancer and genetic change. The exposure from this examination will carry with it a risk equivalant to that from approximately 4 months of natural background radiation. In this examination, approximately eight to ten radiographs (x-ray pictures) will be recorded, and the x-ray exposure of each is similar to the exposure involved in an ordinary x-ray picture of the heart region.

It would be impractical and even misleading to describe in detail all of the possible risks and complications which might result from the procedure. Any questions should be discussed with a member of the angiography team who will be performing the study. This person will review the procedure as is planned for your individual case.

Potential benefits that may be accrued to you relate to information about the status of the arteries to be studied. Such information might be accumulated without the necessity of performing invasive arterial injections. We can not and do not guarantee or promise that you will receive any benefits from this study. After analyzing the results of this examination, your physician may recommend that you undergo the alternative procedure, that of routine angiography employing arterial catheterization and direct injection of radiocontrast agents into the arteries.

Any data that may be published in scientific journals will not reveal the identity of the subjects. In the interest of public safety, patient information will be provided to federal and regulatory agencies as required.

There will be no fee charged for the non-invasive angiogram.

Your decision whether or not to participate will not prejudice you or your medical care. If you decide to participate, you are free to withdraw your consent and to discontinue your participation at any time without prejudice to you or effect on your medical care. If you have any questions, we expect you to ask us. If you have any additional questions later, we will be pleased to try to answer them.

In the event of physical injury that arises solely out of the negligence

of the Stanford University Medical Center or its staff in this study, reimbursement for expenses incurred for necessary medical treatment and hospitalization is available. For further information, please call 497-5244 or write the Medical Center Committee for the Protection of Human Subjects at 851 Welch Road, Room 115, Palo Alto, California, 94304. In addition, if you are not satisfied with the manner in which this study is being conducted, you may report any complaints to the same telephone number and address.

Persons who participate in a medical experiment are entitled to certain rights. These rights include but are not limited to the subject's right to: be informed of the nature and purpose of the experiment; be given an explanation of the procedures to be followed in the medical experiment, and any drug or device to be utilized; be given a description of any attendant discomforts and risks reasonably to be expected; be given an explanation of any benefits to the subject reasonably to be expected, if applicable; be given a disclosure of any appropriate alternatives, drugs, or devices that might be advantageous to the subject, their relative risks and benefits; be informed of the avenues of medical treatment, if any, available to the subject after the experiment if complications should arise; be given an opportunity to ask any questions concerning the experiment or the procedures involved; be instructed that consent to participate in the medical experiment may be withdrawn at any time and the subject may discontinue participation without prejudice; be given a copy of the signed and dated consent form; and be given the opportunity to decide to consent or not to consent to a medical experiment without

the intervention of any element of force, fraud, deceit, duress, coercion or undue influence on the subject's decision.

YOUR SIGNATURE INDICATES THAT YOU HAVE READ AND UNDERSTAND THE ABOVE INFORMATION, THAT YOU HAVE DISCUSSED THIS STUDY WITH THE PRINCIPAL INVESTIGATOR(S) AND/OR HIS OR HER STAFF, AND THAT YOU HAVE DECIDED TO PARTICIPATE BASED ON THE INFORMATION PROVIDED. A COPY OF THIS FORM IS AVAILABLE TO YOU UPON REQUEST.

_____ _____

Signature Date

_____

Signature of Investigator or Witness

11/81

0021941

DATE: February 24, 1986

TO : Professors Edward Rubenstein, Donald Harrison, and Robert Hofstadter

FROM : Roland Finston
Health Physics

SUBJECT: Research subject radiation exposure from K-edge Angiography with Synchrotron X rays.

Thank you for your letter of February 11 and the revised consent form (draft of Feb. 12). Now that the specifics of the patient imaging protocol have been defined, an estimate of the radiation exposure can be made. I use the following assumptions to describe the typical study:

Entrance field size	--	12 cm wide x 12 cm high
Projections, # frames	--	lateral, 7 frames
		LAO, 2
		RAO, 2
Entrance skin exposure	-	391 mR/frame (8.3 msec/line)

The skin exposure per frame, as you note in the consent form, is similar to that from a standard radiograph of the heart. The assessment of risk is properly directed to the most radiosensitive organs: bone marrow, thyroid, breast (female), and lung. The data of Rosenstein* are available for calculating the dose to bone marrow and thyroid. In consultation with Dr. Giacomini the location of the beam on the skin for each projection has been defined. The resulting calculations show a mean bone marrow dose of 32 mrad, and a thyroid dose of less than 2 mrad. As for the lung dose, there is only a small fraction of this organ in the field of view. The mean lung dose is believed to be about 100 mrad. For female subjects, provided that the breast tissue is either on the exit side of the body (e.g. the beam inters from the posterior side) or entirely outside the field of view (for lateral project.), the mean breast dose is estimated to be less than 100 mrad as well.

The radiation exposure from the study may be compared to that from natural background. In this case the mean marrow dose (32 mrad) is the best comparison and that is the same as it receives in 4 months from natural sources**. The radiation exposure may also be compared to that in the alternative diagnostic X-ray test, the coronary arteriogram. The entrance skin exposure and field size is quite similar to that from a single cinè run of 10 seconds duration (several such runs are usually

---

*Marvin Rosenstein, "Organ Doses in Diagnostic Radiology", HEW Publication (FDA) 76-8030, May, 1976.

**This value, 4, should be used at pg 2, line 16 of the revised consent form.

0021942

needed in the typical arteriograpm procedure). The absolute risk of malignancy resulting from the organ dose estimates given above is a chance of less than one in 30,000 subjects.

I believe that this information, along with the details of the protocol and modified consent form, should be submitted to the Institutional Review Committee for their evaluation and approval.

RAF/eh
cc: JMBrown/SM(M) Committee member to review X-ray Dose/Risk Estimate
WmHMarshall / ditto

0021943

RENEWAL

protocol #

REQUEST FOR INSTITUTIONAL APPROVAL OF PROJECT INVOLVING HUMAN SUBJECTS AT RISK
THE MEDICAL COMMITTEE FOR THE USE OF HUMAN SUBJECTS IN RESEARCH

To: Kathy Callahan, 851 Welch Rd., #115

Date: November 20, 1985

PI for Grant/Project: Robert Hofstadter, Ph.D. MD/PhD Title: Professor
Other Investigators: Edward Rubenstein, M.D. MD/PhD Professor (Clinical)
Donald C. Harrison, M.D. MD/PhD Professor

Title of Research Project: K-edge Angiography with Synchrotron X-rays

(AND GRANT, IF DIFFERENT) K-edge Subtraction Angiography with Synchrotron X-rays

Contract/Grant # 1 R01 HL29024-01-A1 NIH Grant 7/1/83-6/30/86
1 HV-38039 Sponsor NIH Contract Period 7/1/83-6/30/86
DE-AT03-84ER60200 DOE Grant 2/1/84-1/31/87

Investigator's Address Rm. TC-129 Dept. Medicine Ext. 7-7188

Sponsored X Unsponsored ____ Investigational Drug ____ Investigational Device ____

Department Chairman Alex Hamer (for CGIM)
SIGNATURE

REVIEW PROCESS - Check One: REGULAR REVIEW ____ PLEASE SEND 4 COPIES (DO NOT STAPLE)

EXPEDITED REVIEW ____ PLEASE SEND 2 COPIES (See regulations on reverse side of this form)
(VA Not Eligible) ____ Paragraph number under which expedited review is requested.

APPROVAL OF THE HUMAN SUBJECTS COMMITTEE SHOULD BE OBTAINED PRIOR TO SUBMISSION OF THE RESEARCH PROJECT TO HHS/NIH. THE COMMITTEE MEETS THE FIRST TUESDAY OF EVERY MONTH AND APPLICATIONS SHOULD REACH THE COMMITTEE 30 DAYS PRIOR TO THE MEETING DATE.

PLEASE PROVIDE INFORMATION IN THE FOLLOWING AREAS AND ATTACH TO THIS FORM:

1. Protocols Involving Use of Radioactive Materials.
   A separate form for projects involving radioactive materials should be obtained from the Health Physics Department, Room 67, Encina Hall, X-3201.

2. Number of Subjects Involved to Date.

3. Description of Results to Date.

4. Problems or Complications.

5. Description of Remainder of Project.

6. Describe Any Changes Since Original Approval.

7. Attach the Consent Form(s) You are Using for this Study.
   (Even if it is the same as previously approved.)

OR:

If this project is the same as a previously approved study under a different name, please supply the title, investigator, date approved and consent form approved by Committee:

0021944

6/84

1-7-86
Approval Date

RENEWAL

Request for Institutional Approval of the Protocol Entitled:
"K-Edge Subtraction Angiography with Synchrotron X-rays"

Additional Information:

1. Protocols Involving Use of Radioactive Materials.

   Radioactive materials are not used in this project.

2. Number of Subjects Involved to Date.

   Human subjects have not been studied to date. Experiments have been conducted on anesthetized dogs. The first experiments on human subjects are currently scheduled for April 1986.

3. Description of Results to Date.

   The left anterior descending, the right coronary and the circumflex arteries have been visualized following transvenous injections of contrast agent in anesthetized dogs.

4. Problems or Complications.

   None

5. Description of Remainder of Project.

   As previously described.

6. Describe Any Changes Since Original Approval.

   Results of experiments on anesthetized dogs indicate that some injections of contrast agent may be made into a central vein, such as the superior or inferior vena cava, rather than into a vein in the upper extremity. For the central venous injections, the injection rate will vary from 5-20 ml per second. For the higher injection rates, a power injector will be employed.

7. Consent forms are attached.

62/81

REQUEST FOR INSTITUTIONAL APPROVAL OF PROJECT INVOLVING HUMAN SUBJECTS AT RISK
by
THE MEDICAL COMMITTEE FOR THE USE OF HUMAN SUBJECTS IN RESEARCH

SEP 25 1981

To: 851 Welch Road, Room 115

Date 21 September 1981

Principal Investigators: Edward Rubenstein, M.D., Professor of Clinical Medicine and Associate Dean of Postgraduate Medical Education

Robert Hofstadter, Ph.D., Max H. Stein Professor of Physics

Title of Research Project: Synchrotron Radiation and Its Application to Digital Subtraction Angiography

Source of Funds: Hearst Foundations and
Kaiser Family Foundations
NIH grant application to be submitted 1 November 1981

Interdepartmental Mail Address: TC-129 Department: Medicine Extension: 7-7188

Department Chairman: Kenneth L. Melmon, M.D.

Check all applicable:

XX New ____ CRC Study XX Sponsored ____ Unsponsored

Use RENEWAL form for continuations and renewals.

APPROVAL OF THE HUMAN SUBJECTS COMMITTEE SHOULD BE OBTAINED PRIOR TO SUBMISSION OF THE RESEARCH PROJECT TO DHEW/NIH. SUCH PROJECTS SHOULD BE SENT TO THE HUMAN SUBJECTS COMMITTEE AT LEAST 30 DAYS BEFORE THE DEADLINE DATE FOR SUBMISSION OF THE GRANT APPLICATION.

Approved 10/1/81

Kenneth L. Melmon

Signature of Department Chairman

0021946

REQUEST FOR INSTITUTIONAL APPROVAL OF PROJECT INVOLVING HUMAN SUBJECTS AT RISK

Septemer 22, 1981

PROTOCOL

1. Radioactive Materials: During this phase of the project radioactive materials will not be used.

2. Patient-related Equipment: See 6a.

3. Renewal or Continuation: This is an initial application.

4. Purpose: The objective of this research is to develop a means of imaging the coronary and cerebral arteries without the necessity of performing invasive intra-arterial catheterizations and the direct injection of contrast media into the orifices of arteries.

5. Background: Angiography, the radiological visualization of blood vessels and the chambers of the heart containing contrast media, has become a powerful means of examining the cardiovascular system and of detecting disorders involving the circulation of the heart, of the brain, and of other vascular structures. However, the techniques currently in use involve invasive procedures that carry significant risks of morbidity and mortality. Untoward events occur in from 1 in 100 to 1 in 200 procedures and fatal complications occur in from 1 in 500 to 1 in 1,000 such examinations. These risks, together with the

0021947

high dollar cost (estimated to be between 2,000 and 3,000 per procedure) limit the use of coronary and cerebral arteriography to persons thought to be at a very high risk of having severe disease. There is an urgent need to reduce both the risks and costs of these procedures. It is believed that the proposed method will: (a) allow examination of patients who would otherwise be subjected to the invasive diagnostic procedure; (b) allow arteriographic follow-up studies of surgical patients in order to assess postoperative status; (c) allow prospective study of the natural history of coronary and cerebral disease by means of serial angiographic examinations.

6a. Study Methodology: The prospect of non-invasive angiography with maximum iodine sensitivity is made possible by the development over the last ten years of the electron storage ring. This device, in reality, a variation on the particle accelerator concept, was developed by the opportunity it creates to examine the fundamental structure of matter in a novel and penetrating way. From the very first, Stanford scientists have been leaders in both the development of electron storage rings and in their application. The discovery in 1974, at the Stanford Linear Accelerator Center (SLAC), of the psi particles was totally unexpected and created a direction in particle physics that is still today being followed world-wide. The electron storage ring at which this discovery, and later others, was made is still in operation at SLAC and its success has led to the construction of an even larger and more powerful ring (PEP) that began operations in 1980.

Fortunately for many other branches of science, the development of the electron storage ring also created an enormously powerful and new

source of electromagnetic radiation, including hard x-rays, emitted because charged particles of low mass, such as electrons, continuously lose energy in the form of electromagnetic radiation when confined to a circular orbit. This radiation is called synchrotron radiation and, because of the relativistic speed of the electrons, is emitted almost entirely in their orbit plane. To maintain the electrons in a circular orbit with constant energy, this radiated energy loss must be replaced promptly by powerful radio-frequency oscillators. At equilibrium, the rate of production of synchrotron radiation by the orbiting electrons is equal to the amount of energy returned to them by the oscillator, and this is large. In effect, the electron storage ring is simply a device for the conversion of radio-frequency electromagnetic power into synchrotron radiation. This is perhaps an inconvenient but unavoidable fact of life for investigators in high-energy particle physics, but it creates a most unusual and novel source of ultra-violet radiation and x-rays for those interested in many other branches of science. This is widely recognized today, and electron storage rings are now under design and construction world-wide solely for the synchrotron radiation they produce. Many of these facilities could be used for clinical pursuits.

The method by which a high intensity and tuneable beam of x-rays may be produced at Stanford Synchrotron Radiation Laboratory (SSRL) for these medical purposes is indicated in Figure 1. The radiation emitted by the circulating electrons during a small angular fraction of their orbit is selected by a horizontal aperture of angular width 6mR, and conducted first through a vacuum and then a helium atmosphere to a special double crystal silicon monochromator. The first crystal in the monochromator is oriented at the appropriate angle (7 degrees) to

0021949

select, by Bragg diffraction, only a narrow band of of wavelengths. The second crystal, which is in accurate alignment parallel with the first, serves only to assure that the emergent beam exits from the monochromator in a direction parallel to that of the incident beam. To change the selected wavelength, or energy, it is necessary only to rotate simultaneously both crystals in the monochromator by the same small angle. In particular, to change the x-ray energy by amount (30eV) required to do iodine dichromography, the angle is only 2.4×10^{-3} degrees, which can be accomplished easily and rapidly.

At a convenient distance from the orbiting electrons, the wiggler-illuminated beam outlined in Figure 1 has a horizontal profile that approximates a line segment. If, for example, the angular width selected by the horizontal collimator is 7.5 mr (well within the 12 mr angular width of the radiation emitted by an 8-pole 19 Kguass SSRL wiggler) and the operating distance is 20 meters, the x-ray beam is 15 cm in width and, if uncollimated and unfocussed, only 0.3 cm (FWHM) in height. This beam may be collimated vertically to provide the desired vertical spatial resolution or it may be focussed in the vertical direction by reflection at grazing incidence from a curved mirror. After the beam, essentially one-dimensional, passes through the patient under examination, it is intercepted by a matching one-dimensional highly-efficient detector. This detector is segmented along its length and records a one-dimensional projected image of the approximately planar segment of the patient intercepted by the beam. At each of these planar segments the image is recorded first at an x-ray energy just above the iodine K-edge and then, immediately afterwards, at an energy just below the K-edge. A complete two-dimensional image of the structure under examination is made by scanning the beam and the detector vertically in synchronism and

0021950

recording pairs of one-dimensional images at each adjacent vertical position. Alternatively, the patient may be scanned vertically relative to a stationary beam and detector. The image at each energy and each vertical position is recorded in digital form in an on-line data-acquisition computer and, after proper mathematical reconstruction, is displayed immediately on a video screen. At the discretion of the operator, the image can be manipulated on the screen or reprocessed in the computer to enhance desired characteristics.

To visualize iodine within the coronary arteries it is necessary to record each pair of one-dimensional images, i.e. above and below the K-edge, in a time short compared to the periodic motion of these structures. An appropriate time interval is approximately 25 msec or less. (It is for this reason that coronary arteriography cannot presently be done using quasi-monoenergetic sources derived from standard x-ray generators, which are insufficiently intense). The total time to scan the heart is longer than the cardiac cycle, but this relatively long scanning time will not result in a blurred image. Each line exposure, due to the high x-ray intensity, will occupy only about 10 milliseconds. The x-ray energy is then switched, within a few (5) msec, and the second exposure is made. Each pair of line exposures occurs within 25 msec, a period within which the coronary arteries are essentially stationary. Upon completion of each exposure pair, the beam (or the patient) is moved vertically by the required positional increment and the procedure repeated. The lack of blurring is governed by the line-pair exposure time and not by the total frame time. This is a direct analog of the focal plane shutters of photographic cameras which produce images free of blurring despite rela-

tively long exposure times of the scanning slit. The price paid for this effect is that all portions of the image are not recorded in precisely the same time interval. A subtle distortion is generated due to motion, but this does not represent blurring. For example, a horizontally moving vessel, which would otherwise be blurred, is reproduced in sharp detail at a slight inclination since the top and bottom are scanned at different times. The rapid changes in x-ray energy required by this method of image acquisition pose no fundamental difficulty in synchrotron beams. This may be achieved by synchronously rotating, or oscillating, the crystals in the monochromator at the required frequency (40 Hz) by the small angular amount necessary to step the transmitted beam back-and-forth through the iodine K-edge.

The subject will be scanned in the sitting position on a motor-driven chair that provides three orthogonal directions of motion at an approximate rate of 3-5 cm/sec.

A major attribute of the synchrotron x-ray beam is that it is capable of providing, after monochromatization, an x-ray intensity entirely adequate to record precise projected images even after transmission through thick sections. Under standard operating conditions of the storage ring at SSRL (a circulating electron current of 100 mA at an energy of 3 GeV) the x-ray beam, without vertical focussing, has an intensity of 6.8×10^8 photons/second/mm^2 of aperture at 20 meters from the storage ring. The band-width at energies close to 33 KeV is 17 KeV, for the Si (220) plane. (For comparison, a powerful modern x-ray generator of conventional design, dissipating 50 kilowatts power, can provide 5.0×10^9 x-ray photons/second/mm^2 at 1 meter distance, but these photons are distributed over an energy range from 20,000 -

100,000 eV. If this latter beam were to be monochromatized by the same method used with the synchrotron beam, its intensity would be reduced by a factor of approximately 2,000.)

Even after transmission through a soft tissue thickness of 20 cm, corresponding to that of the human thorax, the intensity of the SSRL synchrotron beam is 7.9 X 10^5x-ray photons/second/mm^2, or 7.9 X 10^3photons in the nominal time exposure of 10 msec required for coronary arteriography. The statistical noise contributed by this beam intensity to the x-ray image is only 1.1%, which, in principle, permits iodine concentrations (X thickness) as small as 1.1 mg/cm-2 to be detected. This is much smaller than the value typically used in current practice and is, in essence, the reason why non-invasive arteriography is possible with synchrotron x-ray beams.

For a dichromographic study in which two 10 msec digital images are subtracted logarithmically, the iodine concentration-thickness needed to generate a signal-to-noise ratio equal to 3.0 in a pixel of size 1 mm X 1 mm for a soft tissue thickness of 20 cm at the above x-ray intensity is 1.6 mg cm-2. This concentration-thickness is achievable by peripheral venous administration. For example, 50 ml of Renografin-76 (iodine concentration 360 mg cm-2) injected at a rate of 5 ml per second into a patient with a cardiac output of 90 ml per second will undergo dilution by about 20 times and produce an arterial concentration-thickness of 18.5 mg cm-2. In a coronary vessel 2 mm in diameter, about the smallest size subject to surgical by-pass, the iodine concentration-thickness will therefore be 3.7 mg cm-2. The patient exposure for this scan will be 308 mR. This low value is attributable principally to the contrast enchancement made possible through the use of monoenergetic x-ray beams. The total time occupied in the ac-

0021953

quisition of the image in a line-by-line scan with 1 mm vertical resolution over a 15 cm range will be 3.75 seconds. This is a good match to the time required for the iodine bolus to transit the coronary arteries.

In addition to the basic attributes of monochromaticity and high intensity, which respectively make dichromography clinically feasible and permit snapshots to be taken of structures in motion, the one-dimensional character of the synchrotron x-ray beam is also well-suited to high quality radiologic imaging. This latter property, in particular, totally eliminates the scatter problem encountered in conventional radiology made with two-dimensional, or area, x-ray beams. Another benefit of monochromaticity is that beam hardening artifacts are also eliminated.

In some regions of the body the projected image of a vessel may contain contrast due to other iodinated structures which will persist even when the intervening soft tissue and bone have been eliminated through dichromography. This is a negligible problem, for example, when viewing the femoral or carotid arteries. It is a much more significant problem for the coronary arteries where the cardiac chambers, in particular the left ventricle, represent interfering structures. This problem exists for all approaches to non-invasive coronary arteriography. Generally, the epicardial position of the coronary arteries allows projection angles to be chosen so that interference due to iodine in the left ventricle can be minimized. In addition, anatomical considerations reduce this problem. The image may be aquired primarily during the systolic phase, when the volume of the ventricle is smallest. Image-processing techniques are clearly

0021954

applicable since a fundamental technical requirement is met: namely that the coronary artery image signal is considerably stronger than that due to random quantum noise. In this case dynamic windowing techniques can be used, whereby the background left ventricle image is subtracted to provide an isolated coronary artery image. This process can involve automatic edge detection of the vessel image to determine the value of the local background at each position. This signal is then stored and subtracted. A further possibility is the use of digital filtering to reduce the contrast due to the low-spatial-frequency chamber image relative to the high-spatial-frequency arterial image. Stereo images are also possible.

The enormous intensity of x-rays produced by storage rings is such that even after selective energy filtering, the remaining iodine-specific x-rays are intense enough to record highly selective images. This is the basis for our proposal. We intend to use synchrotron radiation from the storage ring at two energies; one that matches the specific absorption of iodine and another with energy slightly below this threshold. The difference between these two signals (obtained by digital subtraction in a computer) suppresses virtually all the unwanted information related to absorption of soft tissue and bone. In other words, the image produced following the simple intravenous injection of iodine in an arm vein will produce a high fidelity picture of the circulatory tree. The principle involved, which has been called dichromography, has been discussed in the medical literature, but its realization is totally dependent upon the existence of synchrotron x-ray beams with the remarkable qualities mentioned above. One source of such x-ray beams is the storage ring presently in operation at Stanford.

0021955

The intravenous injection of contrast agent will be given in boluses of 5 to 50 ml of iodinated contrast material (Renografin-76 is currently the agent selected for use), at a rate of 5 to 15 ml/second into the basilic or cephalic vein. The total dose of contrast agent will not exceed 3.5 ml/Kg. Depending upon the individual anatomy, and the volume and duration of injection required, an 18-gauge needle, or a long intravenous catheter (with side holes) will be employed for the injection. A power injector will be used at higher injection rates. Studies done by Brody et al have indicated that arterial scanning should commence six seconds after the venous injection (timing can also be individualized by determining the interval between the venous injection of a small volume of contrast agent and its appearance in a central artery, such as on the opposite side of the neck).

b. Type and Number of Experimental Subjects: Prior to studies on human subjects, angiograms will be carried out on other mammals to validate the performance of the various components, especially the high-speed switching monochromator. However, the results of such studies cannot be extended to the human coronary and cerebral circulation because of species-specific anatomic and physiologic differences. Therefore, non-invasive angiograms will be done on approximately 15 subjects who will have been recommended to undergo coronary or cerebral arteriography on the basis of their clinical status by their cardiologist or cardiovascular surgeon or neurologist or neurosurgeon. Criteria favoring the selection of subjects for this study will include the following: prior arteriography within the past two years (to allow for comparison with standard arteriographic methods); prior coronary artery bypass procedure or prior carotid endarterectomy; prior

complication of arteriography (other than anaphylactoid reaction or renal impairment due to contrast agent); unwillingness on the part of the patient to accept the risk of invasive arteriography despite strong indications for the procedure. Criteria for excluding subjects are listed under item f.

Studies to be made on candidates selected for non-invasive angiograms will include the following (to be done within one week prior to the procedure):

1. Complete and recorded history and physical examination
2. CBC
3. Urinalysis
4. Erythrocyte sedimentation rate
5. Serum creatinine
6. BUN
7. Serum uric acid
8. SGOT
9. LDH
10. CPK
11. Serum alkaline phosphatase
12. Serum bilirubin
13. Serum calcium
14. Serum phosphorus
15. Serum albumin
16. Serum globulin
17. Serum sodium
18. Serum potassium
19. Serum chloride
20. Serum bicarbonate

0021957

21. Serum free thyroxine

22. Chest x-ray

23. EKG

Patients will be given containers to measure 24-hour urine volumes for the two days prior to the procedure, for the day of the procedure, and for the two days following the procedure. To reduce the risk of renal function impairment, patients will be advised to increase fluid intake to 3 liters per day on the day of the procedure and on the following day (unless their health status precludes such intake). If there is evidence of oliguria, appropriate measures will be instituted, including follow-up measurements of serum creatinine, BUN and electrolytes.

A physician member of the research team will be present throughout the procedure and will administer the i.v. contrast agent. He, and at least one other person in attendance, will be qualified in the technique of C.P.R. A third person will serve as aid and be available to contact emergency services if needed.

The examination facility will include a defibrillator, crash cart, and oxygen.

Radiation safety: All personnel will carry radiation badges at all times.

The examination area will be enclosed in a shielded unit (hutch), with thickness added to protect against the unlikely worst-case event (the SPEAR injected beam targeting in the vacuum chamber that is viewed

by the SSRL beam line). The shielding design and installation and interlock systems for synchrotron radiation experiments will be reviewed by the SLAC health physics group prior to delivery of the x-ray beam.

SSRL uses a hutch system with a key interlock system to allow experimenters to control entry into their hutch. Each hutch also has an ON/OFF line key which is used to inhibit stoppers for experimental enclosure modification. If a hutch stopper is removed while the hutch is in the OFF LINE mode, the SPEAR injection line stoppers and ring stoppers will be inserted. The ON LINE mode allows the stoppers to be withdrawn from the beam line when the hutch is closed.

In the ON LINE mode, an experimenter can open his hutch by inserting his stoppers and pressing the Solenoid Release Unit (SRU) button and removing the key. The hutch can be opened with this key. The key is captured in the lock as long as the hutch is open. Upon completing his work inside the hutch, he closes the hutch, locks it closed, and returns the key to the SRU. He turns the key to complete the interlock and may now withdraw the stoppers to allow entry of the beam.

All heavy objects will be provided with locking castors and provisions will be made for chaining them to a solid building structural unit to prevent impact accidents during an earthquake.

c. Compensation: Financial compensation will not be paid to the participants.

0021959

d. Location of Study: Stanford University Hospital and Stanford Synchrotron Radiation Laboratory.

e. Duration: The present study will continue for approximately two years. Each subject will be involved in no more than three angiographic procedures.

f. Special Precautions:

Criteria for excluding subjects: (1) age less than 21 years or greater than 70 years (2) mental incompetence or inability to cooperate (remain motionless for 5-10 seconds while seated or recumbent) (3) prior anaphylactoid or other untoward reaction to radiocontrast agent or history of iodine sensitivity (4) multiple myeloma (5) diabetes mellitus (6) prior renal insufficiency (7) proteinuria (8) moderate or severe hypertension (systolic greater than 165, diastolic greater than 100mm Hg (9) single-functioning kidney (10) hepatic cirrhosis (11) impaired renal perfusion (dehydration, heart failure) (12) renal vascular disease (13) serum creatinine greater than 1.5 mg% (14) BUN greater than 29 mg% (15) serum uric acid greater than 9 mg% (16) serum calcium less than 8.5 or greater than 11.5 mg% (17) serum potassium less than 3.5 or greater than 5.5 mEq/l (18) serum sodium less than 135 or greater than 145 mEq/l (19) serum albumin less than 2.5 g% (20) pregnancy (21) patients thought to be at high-risk of sudden death, that is severe ventricular irritability with low cardiac output. (Note: all laboratory and blood pressure values should be recorded within one week of procedure)

g. If the present studies confirm the expectation that cerebral, coronary, and other angiographic images of satisfactory clinical quality can be acquired by means of venous injection of contrast agent, a facility will be established to allow the application of this technique in research protocols, and eventually in routine clinical examinations.

h. The study will be terminated if the method proves incapable of producing high-quality angiographic images following venous injection of contrast agent.

7. Risks versus Benefit Ratio: The potential benefit to the participants in this study is the acquisition of important clinical information regarding the coronary and/or the cerebral circulation in individuals whose status requires angiography. This information will be obtained with a markedly reduced risk to the subject since invasive procedures and direct injection of high concentrations of contrast agents into arteries will not be required.

The potential risks relate to the adverse effects of the intravenous administration of Renografin-76 in total doses of 50 to 150 ml, given in bolus amounts of 5 to 50 ml. The actual incidence of acute renal failure after the administration of radiocontrast agents for infusion pyelography or for angiography is not known. Recent prospective studies found no cases of acute renal failure in a group of 100 patients (Eisenberg:AM J MED 68:43, 1980), and one instance of acute renal failure in 100 persons (Kumar: ARCHIVES INTERN MED 141:1268, 1981). It is believed that the exclusion of subjects as listed in item 6f above markedly reduces the risk of acute renal failure.

In this proposal, the radiocontrast agent will be administered intravenously rather than intra-arterially and therefore there could be differences in risks related to the site of injections. However, renal functional impairment induced by contrast agent infusion in this study should be similiar to that caused by intravenous urography (Teuruel: ARCH INTERN MED 141: 1271, 1981), although different infusion rates could lead to unique side effects.

Hypersensitivity reactions occur in approximately 1.7% of all individuals undergoing intravascular radiographic contrast agent studies (Wittin: AM J ROENTGENOL RADIUM THER NUCL MED 119: 832, 1973). Severe anaphylactoid reactions are immediate and are characterized by urticaria or angioedema; airway obstruction owing to laryngeal edema or bronchial spasm; hypotension and shock. Because persons with a history of such reaction will be excluded from this study, and because preference will be given to subjects who have had prior angiographic procedures, the incidence of this complication is expected to be held to a minimum. The risk cannot, however, be eliminated. In addition, there is risk of local extravasation.

8. Confidentiality: Results of the angiographic procedures will become part of the patient's medical chart, and will be available to the subject's personal physician. The results of the study, but not the specific findings on identified individuals, will be made available to granting agencies and in publications.

9. Questionnaires, Record Surveys, etc.: N.A.

10. Other Relevant Information: See Figs. 2, 3, and 4.

OFFICE MEMORANDUM STANFORD UNIVERSITY OFFICE MEMORANDUM STANFORD UNIVERSITY

RECEIVED
MAY 13 1986
SSRL

→ Prof A. Brennwock
SSRL

DATE: April 1, 1986

TO: R. Hofstadter, M.D.,
E. Rubenstein, M.D., D.C. Harrison,
J. Giacomini, M.D. & H. Gordon, M.D.,
Department of Medicine

FROM: Chairman, Medical Committee for the
Protection of Human Subjects in Research

PROTOCOL ENTITLED:
Revision of: K-edge Angiography with Synchrotron X-rays.
Grant title: K-edge Subtraction Angiography with Synchrotron X-rays.

The Committee approved human subject involvement in your research project on April 1, 1986.

The expiration date of this approval is January 6, 1987. If this project is to continue beyond that date, please submit an updated proposal in advance for the Committee's re-approval. If this proposal is used in conjunction with any other human experimentation or if it is modified in any way, it must be re-approved for these special circumstances. In addition, the Committee requests prompt notification of any complications which may occur during any experimental procedure.

All continuing projects and activities must be reviewed and re-approved at least annually by the Committee. Committee approval of any project is for a maximum period of one year. It is the responsibility of the investigator to resubmit the project to the committee for annual review.

for Kathy McClelland
Don R. Goffinet, M.D., Chairman

cc: Sponsored Projects
Marshall O'Neill

Funding Agency: (NIH HL29024; NIH HV38039; DOE DE-AT03-84ER60200)
Period of Time: 04/01/86-01/06/87
Investigational New Drugs: N, N/A
Investigational New Device: Y,
Cooperating Institution: N

0021963

MEDICAL COMMITTEE FOR THE PROTECTION OF HUMAN SUBJECTS IN RESEARCH

1985-1986

Name	Department and Area of Expertise
Carlos A. Camargo, M.D. Associate Professor (Clinical)	Medicine Endocrinology
William T. Clusin, M.D. Assistant Professor	Medicine Cardiology
John Dodson Reverend	Public Member
Don R. Goffinet, M.D.,Chairman Associate Professor	Radiology Radiation Therapy and Cancer Research
Kathy Hoare, DNS	Nursing Administration
Sharon Kotabe, Pharm.D. Supervisor	Stanford Pharmacy
Jean Kutner	Student Human Biology
Kathy McClelland	Staff Coordinator
David Oakes, M.D. Associate Professor (Clinical)	Surgery General Surgery
Elwood C. Pierce Director of Operations	Administration
Carole Runyan Price Associate Director Stanford University Hospital	Staff Legal Representative
Peter Rosenbaum, M.D. Professor	Psychiatry Schizophrenia & Psychotherapy
Hans Steiner, M.D. Physician Specialist Clinical Asst. Professor	Psychiatry Child Psychiatry Adolescent Psychiatry & Eating Disorders
David Stevenson, M.D. Associate Professor	Pediatrics Neonatology
George Tidmarsh	Student M.D. Program

0021964

STANFORD UNIVERSITY OFFICE MEMORANDUM STANFORD UNIVERSITY OFFICE MEMORANDUM

DATE: April 16, 1986

TO: Edward Rubenstein, M.D.
Department of Medicine

FROM: Kathy McClelland K.M.
Human Subjects Committee

SUBJECT: Assurance approval

Stanford University has an approved assurance with the Department of Health and Human Services for a period of five years. The assurance identification number is M 1272, and our institutional review board's identification numbers are 01XB and 02XM. Our assurance will expire December 31, 1989 and a new assurance will be negotiated prior to this date.

Please let me know if I can furnish any more information that you may need.

cc: Bill Wilken
SLAC

0021965

Citron
cc: Anderson
Cantwell

STANFORD SYNCHROTRON RADIATION LABORATORY

March 31, 1986

TO: WILLIAM C. GOUGH, Director Stanford Site Office (SLAC/SSRL) ER Division, SAN

FROM: ARTHUR BIENENSTOCK, Director SSRL

SUBJECT: SSRL PROP #456 "IODINE DICHROMOGRAPHY WITH MONOCHROMATIC X-RAY BEAMS FOR ANGIOGRAPHY"

Dear Bill,

This letter is to present, for your review, the background material and safety evaluations relating to the proposed angiography experiment on human subjects at SSRL. The first human exposure is scheduled to take place in early May, 1986. The human subjects portion of the experiment is the culmination of more than three years of tests using phantoms, excised pig hearts and anesthetized dogs.

The medical protocols and informed consent material have been reviewed and approved by the Stanford University Medical Committee for the Protection of Human Subjects in Research. The approval memorandum is enclosed.

The experimental procedure and safety plan "FRAMEWORK of ANGIOGRAPHY SAFETY PLAN" by John Otis and Albert Thompson have been reviewed and approved by the SLAC Radiation Safety Committee. The approval memo and the referenced plan are attached. At SSRL invitation, health physicists from Stanford University and from UC/LBL attended the review. They advanced no adverse comments on the planned procedure or safety plan.

Prior to performance of the experiment, the following steps will be taken by SSRL:

1. The interlock system will be designed and installed to SLAC standards by SSRL. An independant circuit analysis will be performed. The circuit review is scheduled to take place during the first week of April 1986.

2. A ray trace of the beam transport system will be produced and analyzed to assure that only monochromatic x-rays can reach the subject. This is presently scheduled to be completed during the second week of April 1986.

3. A system safety analysis will be performed. This review is planned for mid-April 1986.

The reports of these reviews and analyses will be forwarded to the SSO upon completion and internal approval. It is our belief that the actions described constitute sufficient assurance of safe practices. We are, however, very anxious to

0021966

assure the safety of all participants in this experiment and, therefore, solicit your comments.

Sincerely,

A. Bienenstock

cc: J. Cerino

Encls: Human Subjects Committee approval memo 1/7/86
SLAC Radiation Committee approval memo 2/25/86
Framework of Angiography Safety Plan 2/7/86

0021967

March 19, 1986

TO: J. Cerino

FROM: A. Bienenstock

SUBJECT: Angiography Experiment - Human Subject Regulations

John, please go through the enclosed DOE rules and come back to me to discuss our compliance with them.

Enclosure

RECEIVED
MAR 19 1986
~~SSRL~~

0021968

cc: Cerne

U.S. DEPARTMENT OF ENERGY
Stanford Site Office (SLAC/SSRL)
Energy Research Division/SAN
Stanford University
P.O. Box 4349 - BIN 8A
Stanford, California 94305

COMM: (415) 854-3300
X2261
FTS: (8) 415-470-9040

March 12, 1986

Dr. Arthur Bienenstock, Director
Stanford Synchrotron Radiation Lab.
2575 Sand Hill Road
Menlo Park, CA 94025

Dear Artie,

Per our previous discussions, I would appreciate receiving the safety analysis reports and background material for the planned coronary angiography experiment on humans now scheduled at SSRL. I plan to have the safety analysis report reviewed by SAN's Environmental, Safety and Quality Assurance Division to assure complience to all DOE regulations.

Sincerly,

William C. Gough

William C. Gough, Director
Stanford Site Office (SLAC/SSRL)
ER Division, SAN

cc: Jim Davis, ESQA/SAN
Dick Nolan, ER/SAN

0021969

Chicago Operations Office, U.S. Department of Energy, 9800 South Cass Avenue, Argonne, Illinois 60439: Connecticut, Delaware, District of Columbia, Illinois, Indiana, Iowa, Maine, Maryland, Massachusetts, Michigan, Minnesota, Nebraska, North Dakota, New Hampshire, New Jersey, New York, Ohio, Pennsylvania, Rhode Island, South Dakota, Vermont, and Wisconsin.

Richland Operations Office, U.S. Department of Energy, P.O. Box 550, Richland, Washington 99352: Alaska, Oregon, and Washington.

Oak Ridge Operations Office, U.S. Department of Energy, P.O. Box E, Oak Ridge, Tennessee 37830: Arkansas, Kentucky, [illegible]iana, Mississippi, Missouri, Panama [illegible]al Zone, Puerto Rico, Tennessee, Virginia, Virgin Islands, and West Virginia.

San Francisco Operations Office, U.S. Department of Energy, 2111 Bancroft Way, Berkeley 4, California 94612: California, Colorado, Hawaii, Idaho, Montana, Nevada, Utah, Wyoming, and U.S. Pacific Territories.

Savannah River Operations Office, U.S. Department of Energy, P.O. Box A, Aiken, South Carolina 29810: Alabama, Florida, Georgia, North Carolina, and South Carolina.

[41 FR 56778, Dec. 30, 1976, as amended at 44 FR 37939, June 29, 1979]

PART 745—PROTECTION OF HUMAN SUBJECTS

Sec.
745.1 Applicability.
745.2 Policy.
745.3 Definitions.
745.4 Submission of assurances.
745.5 Types of assurances.
745.6 Minimum requirements for general assurances.
745.7 Minimum requirements for special assurances.
745.8 Evaluation and disposition of assurances.
745.9 Obligation to obtain informed consent; prohibition of exculpatory clauses.
745.10 Documentation of informed consent.
745.11 Submission and certification of applications and proposals—general assurances.
745.12 Submission and certification of applications and proposals, special assurances.
745.13 Applications and proposals lacking definite plans for involvement of human subjects.
745.14 Applications and proposals submitted with the intent of not involving human subjects.
745.15 Evaluation and disposition of applications and proposals.
745.16 Cooperative activities.
745.17 Investigational new drug 30-day delay requirement.
745.18 Institution's executive responsibility.
745.19 Institution's records; confidentiality.
745.20 Reports.
745.21 Early termination of awards; evaluation of subsequent applications and proposals.
745.22 Conditions.

AUTHORITY: Energy Reorganization Act (Sec. 105(a), Pub. L. 93-438, 88 Stat. 1233 (42 U.S.C. 5801 et seq.)).

SOURCE: 41 FR 52434, Nov. 30, 1976, unless otherwise noted.

§ 745.1 Applicability.

(a) The regulations in this part are applicable to all Department of Energy (DOE) agreements including, but not limited to, grants and contracts supporting research, development, and related activities within the United States and its territories in which human subjects are involved.

(b) For agreements supporting activities outside the United States and its territories in which human subjects are involved, the requirements of this part shall apply to the maximum extent practicable as determined by the Administrator on a case-by-case basis, taking into account the relevant laws and practices of the foreign nation in which the activity will be conducted.

(c) The Administrator may, from time to time, determine in advance whether specific programs, methods, or procedures to which this part is applicable place subjects at risk, as defined in § 745.3(b). Such determinations will be published as notices in the FEDERAL REGISTER and will be included in an appendix to this part.

§ 745.2 Policy.

(a) Safeguarding the rights and welfare of subjects at risk in activities supported under DOE agreements is primarily the responsibility of the institution which receives, or is accountable to DOE for, the funds awarded for the support of the activity. In order to provide for the adequate discharge of this institutional responsibility, it is the policy of DOE that no activity involving human subjects within the United States and its territories to be supported by DOE agreements shall be undertaken unless an Institutional Review Board has reviewed and approved such activity, and the institution has submitted to DOE a certification of such review and approval, in accordance with the requirements of this part.

(b) This review shall determine whether these subjects will be placed at risk, and, if risk is involved, whether:

(1) The risks to the subject are so outweighed by the sum of the benefit to the subject and the importance of the knowledge to be gained as to warrant a decision to allow the subject to accept these risks;

(2) The rights and welfare of any such subjects will be adequately protected;

(3) Legally effective informed consent will be obtained by adequate and appropriate methods in accordance with the provisions of this part; and

(4) The conduct of the activity will be reviewed at timely intervals.

(c) No agreement involving human subjects at risk shall be awarded to an individual unless he is affiliated with or sponsored by an institution which can and does assume responsibility for the subjects involved.

§ 745.3 Definitions.

(a) "Institution" means any public or private institution or agency (including Federal, State, and local government agencies).

(b) "Subject at risk" means any individual who may be exposed to the possibility of injury, including physical psychological, or social injury, as a consequence of participation as a subject in any research, development, or related activity which departs from the application of those established and accepted methods necessary to meet his needs, or which increases the ordinary risks of daily life, including the recognized risks inherent in a chosen occupation or field of service.

(c) "Informed consent" means the knowing consent of an individual or his legally authorized representative so situated as to be able to exercise free power of choice without undue inducement or any element of force, fraud, deceit, duress, or other form of constraint or coercion. The basic elements of information necessary to such consent include:

(1) A fair explanation of the procedures to be followed, and their purposes, including identification of any procedures which are experimental;

(2) A description of any attendant discomforts and risks reasonably to be expected;

(3) A description of any benefits reasonably to be expected;

(4) A disclosure of any appropriate alternative procedures that might be advantageous for the subject;

(5) An offer to answer any inquiries concerning the procedures; and

(6) An instruction that the person is free to withdraw his consent and to discontinue participation in the project or activity at any time without prejudice to the subject.

(d) "DOE" means the Department of Energy.

(e) "Administrator" means the Administrator of DOE or any other officer or employee of DOE to whom authority has been delegated.

(f) "Agreement" means a grant, contract, cooperative agreement, or any other instrument under which DOE provides funds or other resources for projects or efforts involving human subjects.

(g) "Approved assurance" means a document that fulfills the requirements of this part and is approved by the Administrator or Secretary of DHEW.

(h) "Certification" means the official institutional notification to DOE in accordance with the requirements of this part that a project or activity involving human subjects at risk has been reviewed and approved by the institution in accordance with the "approved assurance" on file at DOE or DHEW.

(i) "Legally authorized representative" means an individual or judicial or other body authorized under applicable law to consent on behalf of a

prospective subject to such subject's participation in the particular activity or procedure.

(j) "DHEW" means the Department of Health, Education and Welfare.

[41 FR 52434, Nov. 30, 1976, as amended at 42 FR 30493, June 15, 1977]

§ 745.4 Submission of assurances.

(a) Except as provided in paragraph (b) of this section, recipients or prospective recipients of DOE support under any agreement involving subjects at risk shall provide written assurance acceptable to DOE that they will comply with DOE policy as set forth in this part. Each assurance shall embody

(1) A statement of compliance with DOE requirements for initial and continuing Institutional Review Board review of the supported activities; and

(2) A set of implementing guidelines, including identification of the Board and a description of its review procedures; or, in the case of special assurance concerned with single activities or projects, a report of initial findings of the Board and of its proposed continuing review procedures.

(b) Recipients or prospective recipients of DOE support under any agreement involving subjects at risk who have on file with DHEW an approved general assurance pursuant to 45 CFR Part 46 will be considered to have an approved general assurance on file with DOE. Those recipients meeting this requirement shall, in lieu of the requirements of paragraph (a) of this section, submit a document to DOE stating that they presently have an approved general assurance on file with DHEW.

(c) Such assurance under paragraph (a) or document under paragraph (b) of this section, shall be executed by an individual authorized to act for the institution and to assume on behalf of the institution the obligations imposed by this part, and shall be filed in such form and manner as the Administrator may require.

[41 FR 52434, Nov. 30, 1976, as amended at 42 FR 30493, June 15, 1977]

§ 745.5 Types of assurances.

(a) *General assurances.* A general assurance describes the review and implementation procedures applicable to all DOE-supported activities conducted by an institution, regardless of the number, location, or types of its components or field activities. General assurances will be required from institutions having a significant number of concurrent DOE-supported projects or activities involving human subjects.

(b) *Special assurances.* A special assurance will, as a rule, describe those review and implementation procedures applicable to a single activity or project. A special assurance will not be solicited or accepted from an institution which has on file with DOE or DHEW an approved general assurance.

[41 FR 52434, Nov. 30, 1976, as amended at 42 FR 30493, June 15, 1977]

§ 745.6 Minimum requirements for general assurances.

General assurances shall be submitted in such form and manner as the Administrator may require. The institution must include, as part of its general assurance, implementing guidelines that specifically provide for:

(a) A statement of principles which will govern the institution in the discharge of its repsonsibilities for protecting the rights and welfare of subjects. This may include appropriate existing codes or declarations, or statements formulated by the institution itself. It is to be understood that no such principles supersede DOE policy or applicable law.

(b) An Institutional Review Board or Board structure which will conduct initial and continuing reviews in accordance with the policy outlined in § 745.2. Such a Board or Board structure shall meet the following requirements:

(1) The Board must be composed of not less than five persons with varying backgrounds to assure complete and adequate review of activities commonly conducted by the institution. The Board must be sufficiently qualified through the maturity, experience, and expertise of its members, and diversity of its membership, to insure respect for its advice and counsel for safeguarding the rights and welfare of human subjects. In addition to possessing the professional competence necessary to review specific activities, the Board must be able to ascertain the acceptability of applications and proposals in terms of institutional commitments and regulations, applicable law, standards of professional conduct and practice, and community attitudes. The Board must, therefore, include persons whose conerns are in these areas.

(2) The Board members shall be identified to DOE by name; earned degrees, if any; position or occupation; representative capacity; and by other pertinent indications of experience, such as board certification, licenses, etc., sufficient to describe each member's chief anticipated contributions to Board deliberations. Any employment or other relationship between each member and the institution shall be identified, i.e., full-time employee, part-time employee, member of governing panel or board, paid consultant, or unpaid consultant. Changes in Board membership shall be reported to DOE in such form and at such times as the Administrator may require.

(3) No member of a Board shall be involved in either the initial or continuing review of an activity in which he has a conflicting interest, except to provide information requested by the Board.

(4) No Board shall consist entirely of persons who are officers, employees, or agents of, or are otherwise associated with, the institution, apart from their membership on the Board.

(5) No Board shall consist entirely of members of a single professional group.

(6) The quorum of the Board shall be defined, but may in no event be less than a majority of the total membership duly convened to carry out the Board's responsibilities under the terms of the assurance.

(c) Procedures which the institution will follow in its initial and continuing review of applications, proposals, and activities.

(d) Procedures which the Board will follow: (1) To provide advice and counsel to activity directors and investigators with regard to the Board's actions.

(2) To insure prompt reporting to the Board of proposed changes in an activity, and of unanticipated problems involving risk to subjects or others, and

(3) To insure that any such problems, including adverse reactions to biologicals, drugs, radioisotope-labelled drugs, or to medical devices, are promptly reported to DOE.

(e) Procedures which the institution will follow to maintain an active and effective Board and to implement its recommendations.

§ 745.7 Minimum requirements for special assurances.

Special assurances shall be submitted in such form and manner as the Administrator may require. An acceptable special assurance shall:

(a) Identify the specific agreement involved by its full title and by the name of the activity or project director, principal investigator, fellow, or other person immediately responsible for the conduct of the activity.

(b) Include a statement, executed by an appropriate institutional official, indicating that the institution has established an Institutional Review Board satisfying the requirements of § 745.6(b).

(c) Describe the makeup of the Board and the training, experience, and background of its members as required by § 745.6(b)(2).

(d) Describe, in general terms, the risks to subjects that the Board recognizes as inherent in the activity, and justify its decision that these risks are so outweighed by the sum of the benefit to the subject, and the importance of the knowledge to be gained, as to warrant the Board's decision to permit the subject to accept these risks.

(e) Describe the informed consent procedures to be used, and attach documentation as required by § 745.10.

(f) Describe procedures which the Board will follow to insure prompt reporting to the Board of proposed changes in the activity, and of any unanticipated problems involving risks to subjects or others, to insure that any such problems, including adverse reac-

ons to biologicals, drugs, radioiso-
pe-labelled drugs, or to medical de-
ces, are promptly reported to DOE.
(g) Indicate at what time intervals
e Board will meet to provide for con-
nuing review. Such review must
cur no less than annually.
(h) Be signed by the individual mem-
rs of the Board and be endorsed by
appropriate institutional official.

745.8 Evaluation and disposition of assurances.

(a) All assurances submitted in ac-
rdance with §§ 745.6 and 745.7 shall
evaluated by the Administrator
such officers and employees
DOE as he determines to be appro-
iate. The Administrator's evaluation
all take into consideration, among
her pertinent factors, the adequacy
the proposed institutional Review
oard in light of the anticipated scope
the applicant institution's activities
d the types of subject populations
ely to be involved, the appropriate-
ss of the proposed initial and con-
uing review procedures in light of
e probable risks, and the size and
mplexity of the institution.
(b) On the basis of his evaluation of
assurance, pursuant to paragraph
) of this section, the Administrator
all (1) approve, (2) enter into negoti-
ions to develop a more satisfactory
surance, or (3) disapprove. With re-
ect to approved assurances, the Ad-
inistrator may determine the period
which any particular assurance
ass of assurances shall remain ef-
ctive or otherwise condition or re-
rict his approval. With respect to ne-
otiations, the Administrator may,
nding completion of negotiations for
general assurance, require an institu-
on, otherwise eligible for such an as-
rance, to submit special assurances.

745.9 Obligation to obtain informed consent; prohibition of exculpatory clauses.

Any institution proposing to place
y subject at risk is obligated to
tain and document legally effective
formed consent. No such informed
nsent, oral or written, obtained
der an assurance provided pursuant
this part shall include any exculpa-
ry language through which the subject is made to waive, or to appear to waive, any of his legal rights, including any release of the institution or its agents from liability for negligence.

§ 745.10 Documentation of informed consent.

The actual procedure utilized in obtaining legally effective informed consent and the basis for Institutional Review Board determinations that the procedures are adequate and appropriate shall be fully documented. The documentation of consent will employ one of the following three forms:

(a) Provision of a written consent document embodying all of the basic elements of informed consent. This may be read to the subject or to his legally authorized representative, but in any event he or his legally authorized representative must be given adequate opportunity to read it. This document is to be signed by the subject or his legally authorized representative. Sample copies of the consent form, as approved by the Board, are to be retained in its records.

(b) Provision of a "short form" written consent document indicating that the basic elements of informed consent have been presented orally to the subject or his legally authorized representative. Written summaries of what is to be said to the subject are to be approved by the Board. The short form is to be signed by the subject or his legally authorized representative and by an auditor witness to the oral presentation and to the subject's signature. A copy of the approved summary, annotated to show any additions, is to be signed by the persons officially obtaining the consent and by the auditor witness. Sample copies of the consent form and of the summaries as approved by the Board are to be retained in its records.

(c) Modification of either of the primary procedures outlined in paragraphs (a) and (b) of this section. Granting of permission to use modified procedures imposes additional responsibility upon the Board and the institution to establish:

(1) That the risk to any subject is minimal.

(2) That use of either of the primary procedures for obtaining informed consent would surely invalidate objectives of considerable immediate importance, and

(3) That any reasonable alternative means for attaining these objectives would be less advantageous to the subjects. The Board's reasons for permitting the use of modified procedures must be individually and specifically documented in the minutes and in reports and Board actions to the files of the institution. All such modifications should be regularly reconsidered as a function of continuing review and as required for annual review, with documentation of reaffirmation, revision, or discontinuation, as appropriate.

§ 745.11 Submission and certification of applications and proposals—general assurances.

(a) *Timely review.* Any institution having an approved general assurance shall indicate in each application or proposal for support of activities covered by this part (or in a separate document submitted with such application or proposal) that it has on file with DOE or DHEW such an assurance. In addition, unless the Administrator otherwise provides, each such application or proposal must be given review and, when found to involve subjects at risk, approval, prior to submission, or a written assurance must be submitted that a review is planned or in progress and that the results of the review will be received by the administrator no later than 60 days after the date of submission to DOE. In the event the Administrator provides for the performance of institutional review of an application or proposal after its submission to DOE, processing of such application or proposal by DOE will under no circumstances be completed until such institutional review and approval has been certified. Except where the institution determines that human subjects are not involved, the application or proposal should be appropriately certified in the spaces provided on forms, or one of the following certifications, as appropriate, should be typed on the lower or right-hand margin of the page bearing the name of an official authorized to sign or execute applications or proposals for the institution.

Human Subjects: Reviewed, Not at Risk
(Date) _____

Human Subjects: Reviewed, at Risk, Approved.
(Date) _____

(b) *Applications and proposals not certified.* Applications and proposals not properly certified, or submitted as not involving human subjects and found by the operating agency to involve human subjects, will be returned to the institution concerned.

[41 FR 52434, Nov. 30, 1976, as amended at 42 FR 30493, June 15, 1977]

§ 745.12 Submission and certification of applications and proposals, special assurances.

(a) Except as provided in paragraph (b) of this section, institutions not having an approved general assurance shall submit in or with each application or proposal for support of activities covered by this part a separate special assurance and certification of its review and approval.

(b) If the Administrator so provides, the assurance which must be submitted in or with the application or proposal under paragraph (a) of this section need satisfy only the requirements of § 745.7 (a) and (b) of this part. Under such circumstances, processing of such application or proposal by DOE will not be completed until a further assurance satisfying the remaining requirements of § 745.7 has been submitted to DOE.

(c) An assurance and certification prepared in accordance with this part and approved by DOE shall be considered to have met the requirement for certification for the initial agreement period concerned. If the terms of the agreement recommend additional support periods, each application or proposal for continuation or renewal of support must satisfy the requirements of this section or § 745.11, whichever is applicable at the time of its submission.

§ 745.13 Applications and proposals lacking definite plans for involvement of human subjects.

Certain types of applications or proposals are submitted with the knowledge that subjects are to be involved within the support period, but definite plans for this involvement would not normally be set forth in the application or proposal. These include such activities as—

(a) Institutional-type grants where selection of projects is the responsibility of the institution,

(b) Training grants where training projects remain to be selected, and

(c) Research, pilot, or developmental studies in which involvement depends upon such things as the completion of instruments, or of prior animal studies, or upon the purification of compounds. Such applications or proposals shall be reviewed and certified in the same manner as more definitive applications or proposals. The initial certification indicates institutional approval of the applications or proposals as submitted and commits the institution to later review of the plans when completed. Such later review and certification to DOE should be completed prior to the beginning of the budget period during which actual involvement of human subjects is to begin. Review and certification to DOE must in any event be completed prior to involvement of human subjects.

§ 745.14 Applications and proposals submitted with the intent of not involving human subjects.

If an application or proposal does not anticipate involving or intend to involve human subjects, no certification should be included with the initial submission of the application or proposal. In those instances, however, when later it becomes appropriate to use all or part of awarded funds for one or more activities which will involve subjects, each such activity shall be reviewed and approved in accordance with the assurance of the institution prior to the involvement of subjects. In addition, no such activity shall be undertaken until the institution has submitted to DOE:

(a) A certification that the activity has been reviewed and approved in accordance with this part, and

(b) A detailed description of the proposed activity (including any protocol, revised statement of work or similar document). Also, where support is provided by project grants or contracts, subjects shall not be involved prior to certification and institutional receipt of DOE approval and, in the case of contracts, prior to negotiation and formal amendment of the contract statement of work.

§ 745.15 Evaluation and disposition of applications and proposals.

(a) Notwithstanding any prior review, approval, and certification by the institution, all applications or proposals submitted to DOE involving human subjects at risk shall be evaluated by the Administrator for compliance with this part through such officers and employees of DOE as he determines to be appropriate. This evaluation may take into account, among other pertinent factors, the apparent risks to the subjects, the adequacy of protection against these risks, the potential benefits of the activity to the subjects and to others, and the importance of the knowledge to be gained.

(b) Disposition. On the basis of his evaluation of an application or proposal, pursuant to paragraph (a) of this section, and subject to such approval or recommendation by or consultation with appropriate councils, committees, or other bodies as may be required by law, the Administrator shall

(1) Approve,

(2) Defer for further evaluation, or

(3) Disapprove support of the proposed activity in whole or in part. With respect to any grant or contract award or other agreement, the Administrator may impose conditions, including restrictions on the use of certain procedures or certain subject groups, or requiring use of specified safeguards or informed consent procedures when in his judgment such conditions are necessary for the protection of human subjects.

§ 745.16 Cooperative activities.

Cooperative activities are those which involve institutions in addition to the institution having an agreement with DOE (herein referred to as, though not limited to, a grantee or prime contractor). Examples of cooperative activities are those of a contractor under a grantee or of a subcontractor under a prime contractor. If, in such instances, the grantee or prime contractor obtains access to all or some of the subjects involved through one or more cooperating institutions, the basic DOE policy applies and the grantee or prime contractor remains responsible for safeguarding the rights and welfare of the subjects.

(a) *Institutions with approved general assurances.* Initial and continuing review by the institution may be carried out by one or a combination of procedures:

(1) *Cooperating institution with approved general assurance.* When the cooperating institution has on file with DOE or DHEW an approved general assurance, the grantee or prime contractor may, in addition to its own review, request the cooperating institution to conduct an independent review, and to report its recommendations on those aspects of the activity that concern individuals for whom the cooperating institution has responsibility under its own assurance to the grantee's or prime contractor's Institutional Review Board. The grantee or prime contractor may, at its discretion, concur with or further restrict the recommendations of the cooperating institution. It is the responsibility of the grantee or prime contractor to maintain communication with the Boards of the cooperaing institution. However, the cooperating institution shall promptly notify the grantee or contracting institution whenever the cooperating institution finds the conduct of the project or activity within its purview to be unsatisfactory.

(2) *Cooperating institution with no approved general assurance.* When the cooperating institution does not have an approved general assurance on file with DOE or DHEW, DOE may require the submission of a general or special assurance which, if approved, will permit the grantee or prime contractor to follow the procedure outlined in the preceding subparagraph.

(3) *Interinstitutional joint review.* The grantee or prime contracting institution may wish to develop an agreement with cooperating institutions to provide for an Institutional Review Board with representatives from cooperating institutions. Representatives of cooperating institutions may be appointed as ad hoc members of the grantee or contracting institution's existing Institutional Review Board or, if cooperating is on a frequent or continuing basis, as between a medical school and a group of affiliated hospitals, appointments for extended periods may be made. All such cooperative arrangements must be approved by DOE or DHEW as part of a general assurance, or as an amendment to a general assurance.

(b) *Institutions with special assurances.* While responsibility for initial and continuing review necessarily lies with the grantee or prime contracting institution, DOE may also require approved assurance from those cooperating institutions having immediate responsibility for subjects. If the cooperating institution has on file with DOE or DHEW an approved general assurance, the grantee or prime contractor shall request the cooperating institution to conduct its own independent review of those aspects of the project or activity which will involve human subjects for which it has responsibility. Such a request shall be in writing and should provide for direct notification of the grantee's or prime contractor's Institutional Review Board in the event that the cooperating institution's Board finds the conduct of the activity to be unsatisfactory. If the cooperating institution does not have an approved general assurance on file with DOE or DHEW, it must submit to DOE a general or special assurance which is determined by DOE to comply with the provisions of this part.

[41 FR 52434, Nov. 30, 1976, as amended at 42 FR 30493, June 15, 1977]

0021973

§ 745.17 Investigational new drug 30-day delay requirement.

Where an institution is required to prepare or to submit a certification under §§ 745.11, 745.12, 745.13, or § 745.14, and the application or proposal involves an investigational new drug within the meaning of The Food, Drug, and Cosmetic Act, the drug shall be identified in the certification, together with a statement that the 30-day delay required by 21 CFR 312.1(a)(2) has elapsed and the Food and Drug Administration has not, prior to expiration of such 30-day interval, requested that the sponsor continue to withhold or to restrict use of the drug in human subjects; or that the Food and Drug Administration has waived the 30-day delay requirement; provided, however, that in those cases in which the 30-day delay interval has neither expired nor been waived, a statement shall be forwarded to DOE upon such expiration, or upon receipt of a waiver. No certification shall be considered acceptable until such statement has been received.

§ 745.18 Institution's executive responsibility.

Specific executive functions to be conducted by the institution include policy development and promulgation and continuing indoctrination of personnel. Appropriate administrative assistance and support shall be provided for the Board's functions. Implementation of the Board's recommendations through appropriate administrative action and follow-up is a condition of DOE approval of an assurance. Board approvals, favorable actions, and recommendations are subject to review and to disapproval or further restriction by the institution officials. Board disapprovals, restrictions, or conditions cannot be rescinded or removed except by action of a Board described in the assurance approved by DOE or DHEW.

[41 FR 52434, Nov. 30, 1976, as amended at 42 FR 30493, June 15, 1977]

§ 745.19 Institution's records; confidentiality.

(a) Copies of all documents presented, or required for initial and continuing review by the Institutional Review Board, and documents such as Board minutes, records of subject's consent, transmittals on actions, instructions, and conditions resulting from Board deliberations addressed to the activity director, are to be retained by the institution permanently unless permission is obtained from the Administrator to destroy specific records.

(b) Except as otherwise provided by law, information in the records or possession of an institution acquired in connection with an activity covered by this part, which information refers to or can be identified with a particular subject, may not be disclosed except:

(1) With the consent of the subject or his legally authorized representative; or

(2) As may be necessary for the Administrator to carry out his responsibilities under this part.

§ 745.20 Reports.

Each institution with an approved assurance shall provide the Administrator with such reports and other information as the Administrator may, from time to time, prescribe.

§ 745.21 Early termination of awards; evaluation of subsequent applications and proposals.

(a) If, in the judgment of the Administrator, an institution has failed materially to comply with the terms of this policy with respect to a particular DOE agreement, he may require that said agreement be terminated or suspended in the manner prescribed in applicable regulations.

(b) In evaluating applications or proposals for support of activities covered by this part, the Administrator may take into account, in addition to all other eligibility requirements and program criteria, such factors as:

(1) Whether the applicant or offeror has been subject to a termination or suspension under paragraph (a) of this section,

(2) Whether the applicant, offeror, or the person who would direct the scientific and technical aspects of an activity has, in the judgment of the Administrator, failed materially to discharge his, her, or its responsibility for the protection of the rights and welfare of subjects in his, her, or its care (whether or not DOE funds were involved), and

(3) Whether, where past deficiencies have existed in discharging such responsibility, adequate steps have, in the judgment of the Administrator, been taken to eliminate these deficiencies.

§ 745.22 Conditions.

The Administrator may, with respect to any agreement or any class of agreements, impose additional conditions prior to or at the time of any award when in his judgment such conditions are necessary for the protection of human subjects.

PART 760—DOMESTIC URANIUM PROGRAM

§ 760.1 Uranium leases on lands controlled by DOE. (Domestic Uranium Program Circular No. 760.1, formerly (AEC) Domestic Uranium Program Circular 8, 10 CFR 60.8).

(a) *What this section does.* This section sets forth regulations governing the issuance of leases to permit the exploration for and mining of deposits containing uranium in public lands withdrawn from entry and location under the general mining laws for use of DOE, and in certain other lands under DOE control.

(b) *Statutory authority.* The Atomic Energy Act of 1954, as amended (68 Stat. 919, 42 U.S.C. 2011 et seq.) is the authority for this section.

(c) *Who may hold leases.* Only parties who are (1) citizens of the United States; (2) associations of such citizens; or (3) corporations organized under the laws of the United States or territories thereof, are eligible lessees under this section. Persons under 21 years of age or employees of DOE are not eligible.

(d) *Issuance of leases through competitive bidding.* Except under special circumstances as provided in paragraph (u) of this section, each lease will be offered through competitive bidding and, except as otherwise provided in this paragraph (d), will be issued to the acceptable bidder offering the highest bid. The bid may be on a cash bonus, royalty bonus, or other basis as specified in the invitation to bid. Invitations to bid on some of the lands may be limited to small business concerns as defined by the Small Business Administration, and such invitations may limit the number of leases to be awarded to each bidder. In such cases DOE will accept those bids which, in relation to other bids received pursuant to the invitation, are most advantageous to the Government. Before any lease is awarded DOE may require high bidders to submit a detailed statement of the facts as to such matters as their experience, organization, and financial resources. DOE reserves the right to reject any and all bids.

(e) *Solicitation of bids.* Announcements of the availability of invitations to bid for a lease will be publicly posted and published. Copies of such announcements will also be mailed to parties who submit to DOE's Grand Junction, Colorado, Office subsequent to publication in the FEDERAL REGISTER of this (DOE) Domestic Uranium Program Circular 760.1, written requests that their names be placed on a mailing list for receipt of such announcements. The invitations containing information for preparation and submission of bids will be available at the Grand Junction Office, and will be mailed only on specific written request, following announcement of their availability. Invitations will specify the land to be leased, the basis on which bids are to be submitted, the amount of the monetary deposit which must be transmitted with the bid, the place and time the bids will be publicly opened, the term, royalty and other payments, performance requirements, and other payments, performance requirements, and other conditions which will become a part of the lease. In addition, data which have been assembled pertaining to the lands to be leased will be available for public inspection at the Grand Junction Office; copies will also be available for purchase.

(f) *Bidding requirements; deposits.* All bids must be filed at the place and prior to the time set forth in the invitation. Each bid must be sealed and ac-

REVISION

protocol #

REQUEST FOR INSTITUTIONAL APPROVAL OF PROJECT INVOLVING HUMAN SUBJECTS AT RISK
THE MEDICAL COMMITTEE FOR THE USE OF HUMAN SUBJECTS IN RESEARCH

To: Kathy McClelland, 851 Welch Rd., #115 (X5244) Date: March 6, 1986

PI for Grant/Project: Robert Hofstadter MD/PhD Title: Professor
Other Investigators: Edward Rubenstein, M.D. MD/PhD Professor (Clinica
Donald C. Harrison, M.D. MD/PhD Professor

Title of Research Project: K-edge Angiography with Synchrotron X-rays

(AND GRANT, IF DIFFERENT) K-edge Subtraction Angiography with Synchrotron X-rays

Contract/Grant # 1 R01 HL29024-01-A1 NIH Grant 7/1/83-6/30/86
1 HV-38039 Sponsor NIH Contract Period 7/1/83-6/30/86
DE-AT03-84ER60200 DOE Grant 2/1/84-1/31/87

Investigator's Address Rm. TC-129 Dept. Medicine Ext. 7-7188

Sponsored X Unsponsored ____ Investigational Drug ____ Investigational Device ____
IND # ____ IDE # ____

Department Chairman Signature: Edward Hoshoultiffe for L Hamrick

REVIEW PROCESS - Check One: REGULAR REVIEW ____ PLEASE SEND 4 COPIES TOTAL (DO NOT STAPLE

EXPEDITED REVIEW ____ PLEASE SEND 2 COPIES (See regulations
(VA Not Eligible) on reverse side of this form)
____ Paragraph number under which expedited review is requested.

APPROVAL OF THE HUMAN SUBJECTS COMMITTEE SHOULD BE OBTAINED PRIOR TO SUBMISSION OF THE RESEARCH PROJECT TO HHS/NIH. THE COMMITTEE MEETS THE FIRST TUESDAY OF EVERY MONTH AND REVISION APPLICATIONS SHOULD REACH THE COMMITTEE 15 DAYS PRIOR TO THE MEETING DATE.

PLEASE PROVIDE INFORMATION IN THE FOLLOWING AREAS AND ATTACH TO THIS FORM:

1. Describe Any Changes Since Original Approval.

2. Attach the Consent Form(s) You are Using for this Study.
(Even if it is the same as previously approved.)

Approval Date

0021975

REVISION

Request for Institutional Approval of the Protocol Entitled:
"K-Edge Subtraction Angiography with Synchrotron X-rays"

Additional Information:

1. Describe Any Changes Since Original Approval.

   The consent form has been modified to provide more detailed information about risks related to the venous catheterization procedure and to the radiation exposure. Corrected parameters for contrast agent administration have been provided.

   A report from Roland Finston is appended in which he provides additional information regarding radiation exposure.

2. Consent forms are attached.

DATE: February 24, 1986

TO : Professors Edward Rubenstein, Donald Harrison, and Robert Hofstadter

FROM : Roland Finston
Health Physics

SUBJECT: Research subject radiation exposure from K-edge Angiography with Synchrotron X rays.

Thank you for your letter of February 11 and the revised consent form (draft of Feb. 12). Now that the specifics of the patient imaging protocol have been defined, an estimate of the radiation exposure can be made. I use the following assumptions to describe the typical study:

Entrance field size	--	12 cm wide x 12 cm high
Projections, # frames	--	lateral, 7 frames
		LAO, 2
		RAO, 2
Entrance skin exposure	-	391 mR/frame (8.3 msec/line)

The skin exposure per frame, as you note in the consent form, is similar to that from a standard radiograph of the heart. The assessment of risk is properly directed to the most radiosensitive organs: bone marrow, thyroid, breast (female), and lung. The data of Rosenstein* are available for calculating the dose to bone marrow and thyroid. In consultation with Dr. Giacomini the location of the beam on the skin for each projection has been defined. The resulting calculations show a mean bone marrow dose of 32 mrad, and a thyroid dose of less than 2 mrad. As for the lung dose, there is only a small fraction of this organ in the field of view. The mean lung dose is believed to be about 100 mrad. For female subjects, provided that the breast tissue is either on the exit side of the body (e.g. the beam inters from the posterior side) or entirely outside the field of view (for lateral project.), the mean breast dose is estimated to be less than 100 mrad as well.

The radiation exposure from the study may be compared to that from natural background. In this case the mean marrow dose (32 mrad) is the best comparison and that is the same as it receives in 4 months from natural sources**. The radiation exposure may also be compared to that in the alternative diagnostic X-ray test, the coronary arteriogram. The entrance skin exposure and field size is quite similar to that from a single cinè run of 10 seconds duration (several such runs are usually

---

*Marvin Rosenstein, "Organ Doses in Diagnostic Radiology", HEW Publication (FDA) 76-8030, May, 1976.

**This value, 4, should be used at pg 2, line 16 of the revised consent form.

0021977

needed in the typical arteriograpm procedure). The absolute risk of malignancy resulting from the organ dose estimates given above is a chance of less than one in 30,000 subjects.

I believe that this information, along with the details of the protocol and modified consent form, should be submitted to the Institutional Review Committee for their evaluation and approval.

RAF/eh
cc: JMBrown/SM(M) Committee member to review X-ray Dose/Risk Estimate
WmHMarshall / ditto

0021978

Elapsed time 00:02:53

PRINTED AT 1015 PST 02/21/8

M422

M422

TX-TLX 1015 PST 02/21/86
T385

RCA GA
7813652534.9VAE01394650"
STANFRD STNU A

FEB 21 1342 680078
3652534KEKOHO J
STANFRD STNU A

FROM STANFORD CALIFORNIA 1016 PST 02/21/86 OUR MSG NO M422
TLX 348402 STANFRD STNU

ATTN: BOB HETTEL
KEK

SLAC RADIATION COMMITTEE APPROVED ANGIOGRAPHY SAFETY SYSTMES AS SUBMITTED. REQUEST YOU BEGIN DESIGN OF INTERLOCKS ASAP. IF YOU NEED MATERIAL PLEASE REPLY.
CERINO

STANFRD STNU A

3652534KEKOHO J.....
0001.3

** COMPLETE **
WE DISC.
Elapsed time 00:01:12

PRINTED AT 1017 PST 02/21/86

0021979

DATE: February 11, 1986

TO : Professors Robert Hofstadter, Edward Rubenstein, and Donald Harrison

RECEIVED
FEB 11 1986
SSRL

FROM : Roland Finston, Director
Health Physics

SUBJECT: Research Project: K-edge Angiography with Synchrotron X-rays.

Thank you for inviting me to participate in the review of radiation safety of research subjects. At the outset, I wish to clarify the role of the University Health Physics and the University's Panel on Radiological Hazards in the matter of medical exposure to radiation generated by machinery. The safety of a machine is the responsibility of the owner which in this case is, I presume, SLAC and SSRL. Health Physics on the campus has no authority nor responsibility for machine safety at SLAC; we understand that to be a DOE facility. As regards research subject safety, the Stanford Medical Committee for the Use of Human Subjects in Research has agreed to seek the advice of the School of Medicine Radiation-Producing Machines Safety Committee for risk evaluation. As a member of that committee it is toward that aspect of the protocol which I address the following observations:

1) The two protocol documents I have read which have been submitted to the Human Subjects Committee (original application of Sept. 21, 1981, renewal application of Nov. 20, 1985) appear to lack sufficient specific information on patient exposure to X-radiation. The original application states the patient exposure per image to be 308 mR. A recent technical report (Framework of Angiography Safety Plan, John Otis and Albert Thompson, Feb. 7, 1986) states the patient exposure to range from 0.4 to 0.8 R/frame. In order to assess the risk to the subject, I believe it would be desirable to know the following:

   a) What are the dimensions of the scanned region, at the entrance skin of the subject? What are the anatomical landmarks of the region? What is the projection of the patient?

   b) How many frames of each patient are to be taken (typical, maximum) at each examination? How many examinations (typical maximum) will be made of each patient (the original application stated no more than three; does this still hold true)?

   c) What are clinical factors used to select the scan speed (and thus the radiation exposure to the subject)? Will it be known before the exposure that the image is likely to be of the proper information density, so as to avoid re-takes?

With answers to the above question, I believe that a radiation dose/risk assessment can be quickly completed. I believe it should be done and

submitted to the Human Subjects Committee as an addendum to the renewal application.

2) The patient consent form (renewal application) mentions as a risk "the radiation exposure inherent in an X-ray examination". It is typical of consent forms in research protocols to compare the research-directed radiation exposure to that associated with specific common medical X-ray examination and/or to that from natural background. A specific risk of delayed cancer and heritable genetic mutation may also be given, with a comparison to the spontaneous incidences. May I suggest that consideration be given to comparing the research angiographic exposure to that associated with the conventional arterial angiographic study? and that the risk of such exposure be quantified in the consent form?

3) As a matter of good practice, it would be desirable to provide the same standards of patient and employee radiation safety as is required at the Stanford Medical Center. Specifically, the physician who operates the X-ray exposure control should be a State of California "X-ray Supervisor and Operator" permittee. Of course it goes without saying that no employee should be imaged as a demonstration or for training purposes. (A phantom should be so-used). The X-ray beam width should be collimated to the area clinical interest, and no larger in any case than the image receptor. The expected exposure to the patient at the entrance skin should be measured with a suitable dosimeter, while using the various technical settings which are contemplated.

I offer the above suggestions with the motive of improving upon a very excellent effort already made to assure subject safety and to document same. In the interests of the subjects, the investigators, and the institutions, it would be desirable to consider formulating the addendum to the protocol and modifying the patient consent form. I and the other Machine Committee members (Prof. J. Martin Brown, Prof. William H. Marshall) are prepared to respond with a technical evaluation in time to present the information to the Human Subjects Committee at its March 4th meeting.

RAF/eh

0021981

cc. J Cerino

RECEIVED

FEB 11 1986

SSRL

STANFORD UNIVERSITY, STANFORD, CALIFORNIA 94305-2184

ROBERT HOFSTADTER
MAX H. STEIN PROFESSOR
OF PHYSICS, EMERITUS
(415) 497-0281

February 10, 1986

Dr. Arthur Bienenstock
Director -- SSRL
Stanford Linear Accelerator Center
P.O. Box 4349
Stanford, CA 94305

Dear Artie:

As you know, our angiography project* has had a goal of applying synchrotron radiation x-rays to a study of coronary arteries in human subjects. This project has developed in the last 5 years at SSRL at SLAC through a series of steps involving phantoms, excised pig hearts, and in-vivo dog studies. Our recent dog studies have been successful and we now are at the stage when, for the first time, we feel we are ready to examine human subjects. This is the unanimous conclusion of the four physicians who are members of our group:

Dr. Edward Rubenstein
Dr. Donald Harrison
Dr. John Giacomini
Dr. Helen Gordon

The latter three are cardiologists and Dr. Harrison is head of cardiology at the Stanford Medical School.

Accordingly we are planning a set of tests beginning in late April when we expect to have a small number of patients undergo tests at SSRL under the close supervision of physician members of our team. The physicians will take responsibility for the medical aspects of the tests and for the care of the patients.

There are other aspects of the studies connected with physical safety of the patients with regard to the radiation in the x-ray beam itself. We have studied this problem carefully and have given Dr. A. Thompson, of our group, the responsibility for assuring such safety.

A critical examination of the safety conditions will take place on February 13 at 1:30 in the Yellow Conference Room at SLAC when the SLAC Radiation Safety Committee convenes for this purpose. Members of the Stanford

0021982

University Radiation Safety group will also be present. We invite you to attend this meeting.

The Human Subject Committee of the Medical School has already approved the medical protocol for our studies.

If you cannot attend this meeting would you kindly appoint a representative who could be present?

Best regards.

Sincerely,

Bob

Robert Hofstadter

RH/gp

* Supported by grants or contracts from:

The Hearst Foundation
The Kaiser Family Foundation
The National Institute of Health
The U.S. Department of Energy

0021983

February 7, 1986
JOHN OTIS
ALBERT THOMPSON

FRAMEWORK OF ANGIOGRAPHY SAFETY PLAN

Introduction

The use of beamline IV-2 at SSRL for diagnostic medical imaging of coronary arteries is being planned. An initial run is scheduled for April/May of this year. The radiation safety and monitoring of these human patient studies is an important part of our planning. Since this program is quite different from the normal procedures followed at SLAC and SSRL for radiation protection, a detailed safety plan has been prepared.

At the SLAC radiation committee meeting on Feb 13 we will present our safety plan for your study. A general outline of our experiment and the results from previous dog runs will be presented first, then the specific instrumentation relevant to radiation safety will be described, and finally the safety interlock logic and imaging protocol will be covered.

General Plan

The general principle for using a synchrotron radiation beamline for medical imaging is to use a fan beam of monochromatic x-rays. To take a picture the patient will sit in a chair which will be moved vertically through the beam to acquire two digital x-ray images. One image is taken at an x-ray energy just below the iodine absorption edge at 33 keV and the other is taken with the energy just above this edge. The logarithmic difference of the two images is then taken to produce a difference image. Since the iodine absorption jumps by a factor of 7 at the edge while the absorption of tissue and bone changes only slightly this difference image is very sensitive to iodine. To image coronary arteries a venous injection of an iodine containing contrast agent will be given and after about 10 seconds the iodine bolus will have passed through the heart and lungs and will begin to fill the coronary arteries. Just before this time we will have begun to scan the patient to acquire images of the arterial system.

Safety Plan Outline

The overall scanning procedure will be controlled as in any radiological laboratory by a responsible physician who will determine the total x-ray exposure permissible. The exposure will be within the limits approved for this study by the Human Subjects Ethics Committee at the Stanford University Hospital.

0021984

A series of radiation shutters are installed on the beamline which are controlled by a safety protection system. The detailed logic of the system will be presented at the meeting but the general features will be described here. During a scan the radiation is turned on and off during the acquiring of different images frames by a computer controlled imaging shutter. In case of a unsafe condition the radiation is rapidly turned off by a pair of fast closing shutters. These shutters close if any unsafe condition is sensed by the protection system. Some of the unsafe conditions are:

a) X-ray beam on with the patient chair not in motion.

b) Scanning procedure going on too long.

c) Physician releasing the deadman switch.

As well as controlling the radiation safety, a calibrated radiation monitoring system will be implemented to record the total radiation dose received by the patient.

The radiation safety interlock system will be installed by SSRL under the direction of Bob Hettel and the radiation safety will be verified by Gary Warren of SLAC.

SAFETY SYSTEM HARDWARE AND PROTOCOL

The X-ray images will be acquired in line-scan fashion, with the patient moving vertically at constant speed and the X-ray beam sweeping over the field of interest. The experimental protocol, as presently envisaged, calls for the acquisition of several images in rapid time sequence (a "scan sequence") by repeating the scan motion alternately in opposite directions. To prevent X-ray exposure to the patient during the periods of deceleration and acceleration between the constant-velocity scans (as well as before and after the imaging sequence) the X-ray beam will be blocked by a fast-acting imaging shutter (IS).

The monochromator provides two monochromatized X-ray beams, initially separated by approximately 1 mm vertically but converging toward the patient position. The two beams are produced by single Bragg diffraction from separate Si(111) crystals, each of which intercepts half the vertical profile of the incident beam. The upper beam has an energy within 100 eV above the iodine K-edge (33.17 keV), and the lower beam has an energy within 100 eV below this edge. The monochromatized X-ray beams exit from the monochromator at a rising angle of 6.84 degrees to the primary beam, and pass above a beam stop located within the monochromator enclosure. The beam stop protects the patient from any penetrating gamma radiation coming from SPEAR along the primary beam direction. The rotating drum mechanism, located immediately downstream of the monochromator, transmits only one of the monochromatic beams at any instant, switching between them in synchronization with the scan data acquisition.

The monochromator is set to provide the correct beam energies during the initial setup and alignment of the imaging apparatus. Thereafter, inadvertent change in the angle of the monochromator crystals cannot admit to the patient area a beam differing from the intended energy by more than a few keV, since the resulting change in the beam angle will cause it to miss the apertures provided for its passage. That the energy setting is correct for the imaging procedure will be verified by beam tests immediately prior to a patient scan.

To allow thermal equilibration, the monochromator must be illuminated continuously by the primary X-ray beam. The SSRL hutch stoppers (HS1 and HS2) controlling the primary beam cannot be opened unless both safety shutters (SS1 and SS2) are closed, preventing the monochromatized beam from entering the patient examination area. Subsequently, the angiography PPS interlock (see Appendix) prevents the safety shutters from being opened unless the radiation screen is closed and the deadman switch is actuated. Each safety shutter consists of a rotating blade held open against spring tension by two rotary solenoids. When the solenoids are deenergized, the blade rotates rapidly (within 20 ms) by 45 degrees to the closed position. The safety shutters will close if external power is lost. To achieve the desired response time (10-20 ms) during normal scan operation, the imaging shutter is driven by a servo-controlled dc motor; therefore, external power is required for its operation.

Both the imaging shutter and the safety shutters are located downstream of the monochromator enclosure, and are incorporated into the housing of the energy-switching (rotating drum) mechanism associated with the monochromator. In the closed position, the imaging shutter has a thickness of approximately 5/8 inch steel (72 absorption lengths for 33 keV photons), and each safety shutter has a thickness of 0.176 inch steel (21 absorption lengths).

During the scan sequence, the patient will be alone in the shielded examination room that confines direct and scattered radiation. The attending physician will have the responsibility for seeing that the patient is properly positioned and that the examination room is clear of other personnel. However, the attending personnel must be able to enter this room immediately in response to a possible medical emergency, even if a scan is in progress. Therefore, the door on the examination room nearest to the patient must be left open. In its place will be erected an easily opened radiation screen, with a large leaded acrylic transparent window so that the physician and patient will be able to maintain eye contact throughout the procedure. The safety shutters are triggered by the angiography PPS interlock if the screen is opened while a scan is in progress, extinguishing the X-ray beam before personnel can reach the radiation area.

The physician will determine the projection and image field by initial positioning of the patient and scanning chair, and by providing the upper and lower scan limits to the scan control program. Once this setup is complete and all personnel have left the examination room, the radiation screens are closed and the physician stands outside, visible to the patient.

By closing and holding the deadman switch, the physician initiates the programmed scan sequence and allows it to proceed. The safety shutters can then be opened while the imaging shutter is closed. The imaging shutter remains closed until it is opened under computer control as part of the scan sequence. If the patient requires medical attention during a scan, or if the physician observes some malfunction in the scan operation, release of the deadman switch will extinguish the beam and abort the scan.

To prevent unauthorized operation of the system, the deadman switch is inoperative unless it is first enabled by the operation of a momentary-contact key-lock switch located next to it, the key being kept by the physician. Operation of the key-lock switch starts a timed interval of about 20 s during which the deadman switch must be closed. If the deadman switch is not closed within this timed interval, it must again be enabled by use of the key-lock switch.

Release of the deadman switch or opening of the radiation screen while either of the safety shutters is not closed will generate a fault condition (ANGI FAULT) in the angiography PPS interlock, which forces closure of the two safety shutters, the imaging shutter, and the SSRL hutch stoppers. ANGI FAULT is latched, and can be reset only by use of a key carried by the SSRL operator.

The rate of X-ray exposure from the monochromatized 33 keV beam collimated to a height of 0.5 mm is approximately 47 R/s. This assumes SPEAR operating conditions of 3 Gev, 100 mA and an 18 kG wiggler field. Thus, the safety of the patient requires that the imaging shutter be closed unless the scanning chair is in motion at the correct speed. Two independent chair-motion detectors are incorporated into the angiography PPS interlock. The motion detectors will be driven by the chair motion, independent of the motor-drive coupling. If either motion detector fails to give an indication of correct scanning speed when the imaging shutter is not closed, ANGI FAULT will be generated unless both safety shutters are closed. Thus the beam will be extinguished if control malfunction or power failure either cause the scanning chair to stop in the middle of a scan or cause the imaging shutter to remain open while the chair is decellerating at the end of a scan.

Since an upper limit to beam intensity is known, given SPEAR operating conditions, total exposure to the patient can be kept within safe limits by imposing a time limit on the total length of a scan sequence. For each scan sequence, the timed interval begins when the imaging shutter is first opened. If either safety shutter is not closed when the time limit is reached, ANGI FAULT is generated.

Interlocks prevent opening of any beam shutters if that action would create an immediate ANGI FAULT. With two exceptions, ANGI FAULT cannot occur if HS1 and HS2 are both closed, or if SS1 and SS2 are both closed. The exceptions are actuation of the emergency stop switch and withdrawal of the computer OK. The computer OK will be provided by a watchdog timer that verifies the correct operation of the scan-system's control computer.

0021987

Table I summarizes the possible range of potential patient exposures as a function of the selectable scanning speed of the patient chair or, equivalently, the acquisition time for each horizontal line element in the image (summed over both X-ray energies). The actual exposures allowed for a particular patient study will depend on the patient thickness and the level of iodine sensitivity required in the image. The exposure level should be in the range 0.4 - 0.8 R per image frame.

TABLE I

MAXIMUM PATIENT EXPOSURES ACHIEVABLE WITH THE ANGIOGRAPHY SYSTEM AT SSRL BEAM LINE IV-2, ASSUMING SPEAR OPERATING CONDITIONS OF 100 MA AT 3 GEV, AND A WIGGLER FIELD OF 18 KG. IT IS ASSUMED THAT THE MONOCHROMATIZED BEAM IS COLLIMATED TO A HEIGHT OF 0.5 MM AT THE PATIENT POSITION, 28 M FROM THE WIGGLER.

SCAN SPEED (cm/sec)	TOTAL ACQUISITION TIME PER LINE (msec)	MAXIMUM EXPOSURE PER IMAGE FRAME (mR)
24	2.1	98
12	4.2	195
6	8.3	391
3	16.7	782

STANFORD SYNCHROTRON RADIATION LABORATORY

ENGINEERING NOTE

CODE	SERIAL	PAGE OF

AUTHOR	DEPARTMENT	LOCATION	DATE
J. CERINO			FEBRUARY 5, 1986

ANGIOGRAPHY HUTCH SCHEMATIC PLAN

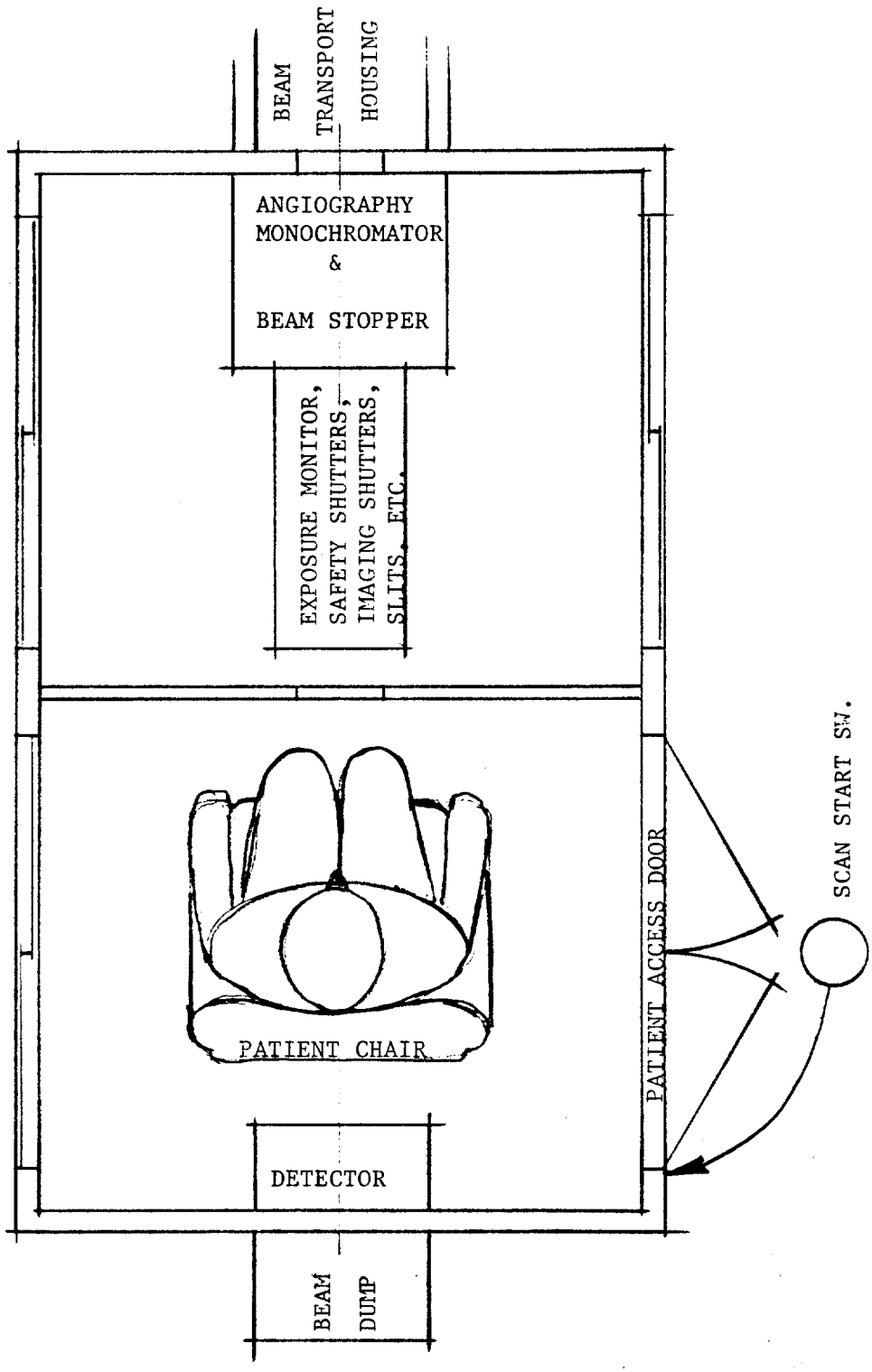

00219899

7600-54250

RL-3220 (Rev. 5/75)

ANGIOGRAPHY PPS INTERLOCK (ANGI) -- BL 4-2

TABLE OF CONTENTS

1.0 SYSTEM DIAGRAM

2.0 SAFETY SHUTTERS OPEN/CLOSED COMMAND

3.0 IMAGING SHUTTER OPEN/CLOSED COMMAND

4.0 CHAIR MOTION INTERLOCK

- 4.1 FAULT LOGIC
- 4.2 CHAIR MOTION DETECTOR (REDUNDANT)

5.0 EXPOSURE TIME OUT INTERLOCK

6.0 RADIATION PANEL DOOR INTERLOCK

7.0 EMERGENCY STOP INTERLOCK

8.0 COMPUTER OK INTERLOCK

9.0 ANGI GO (ANGIOGRAPHY INTERLOCK SYSTEM GO/FAULT)

- 9.1 ANGI FAULT LOGIC
- 9.2 KEYED FAULT RESET

10.0 KEYED TIMER CIRCUIT

- 10.1 SCAN CYCLE ENABLE (KEYED TIMER)
- 10.2 START SCAN & EXPOSURE TIMERS (REDUNDANT)

11.0 ANGI ON/OFF LINE CIRCUIT

- 11.1 FOLLOWER RELAYS
- 11.2 HUTCH DOOR BYPASS

12.0 INTERACTION WITH HUTCH PROTECTION SYSTEM (HPS)

- 12.1 HUTCH STOPPER STATUS
- 12.2 HUTCH DOOR ADDITIONS
- 12.3 HUTCH DOOR REMOVAL
- 12.4 HUTCH STOPPER OPEN ENABLE FROM ANGI

13.0 SCAN SWITCH INTERLOCK

- 13.1 LOGIC
- 13.2 SCAN SWITCH FOLLOWER RELAYS.

STANFORD SYNCHROTRON RADIATION LABORATORY

ENGINEERING NOTE

AUTHOR	DEPARTMENT	CODE	SERIAL	PAGE
R. Hettel	ANGIOGRAPHY HUTCH (BL 4-2) PPS INTERLOCK			1 OF 13
		LOCATION	DATE	
			1-26-86	

1.0 SYSTEM DIAGRAM

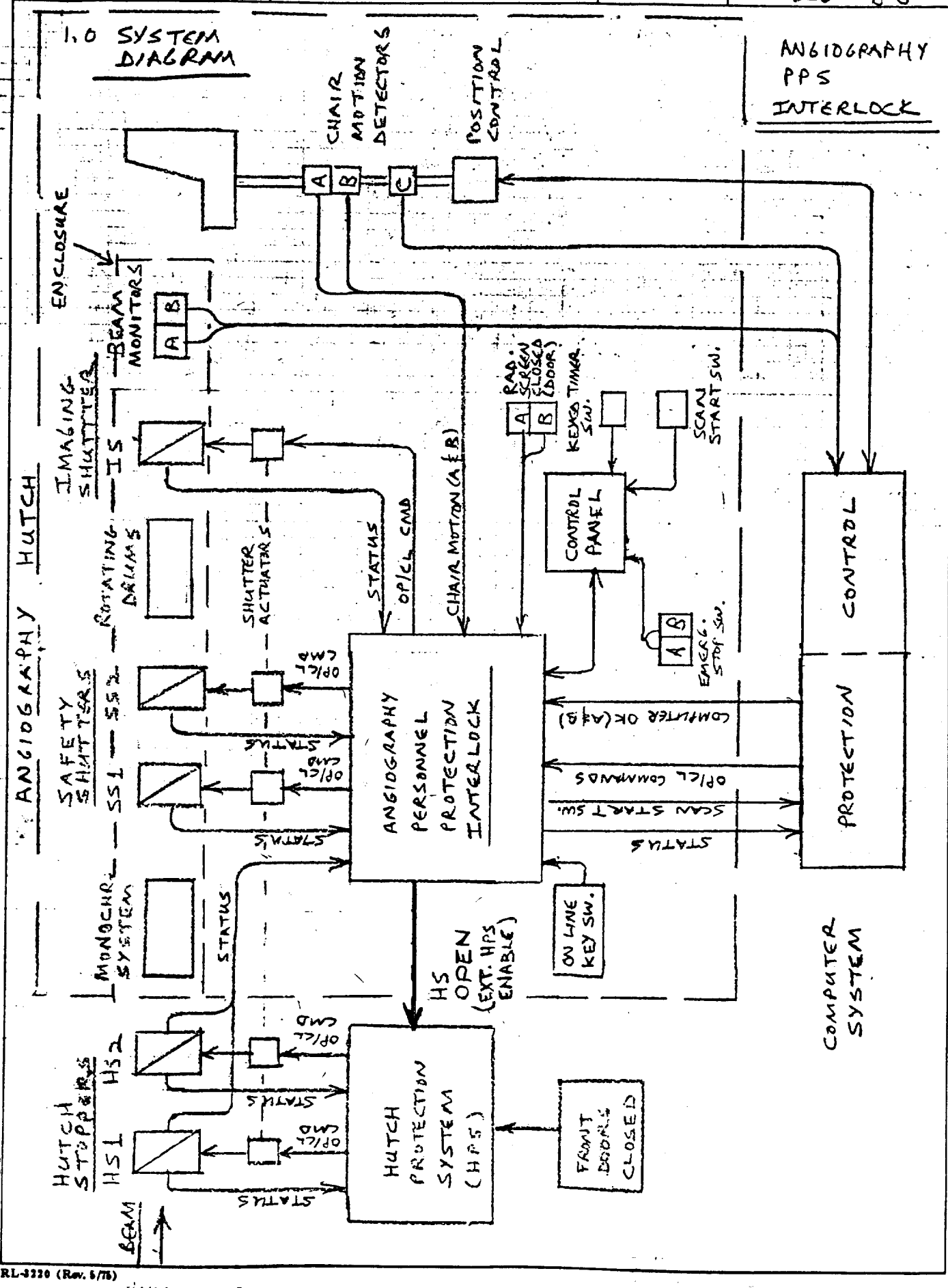

7600-54250

RL-3220 (Rev. 5/75)

0021991

ANGIOGRAPHY PPS INTERLOCK (ANGI) BL IV-2

2.0 SAFETY SHUTTER OPEN/CLOSE COMMAND (SS OP/CL CMD)

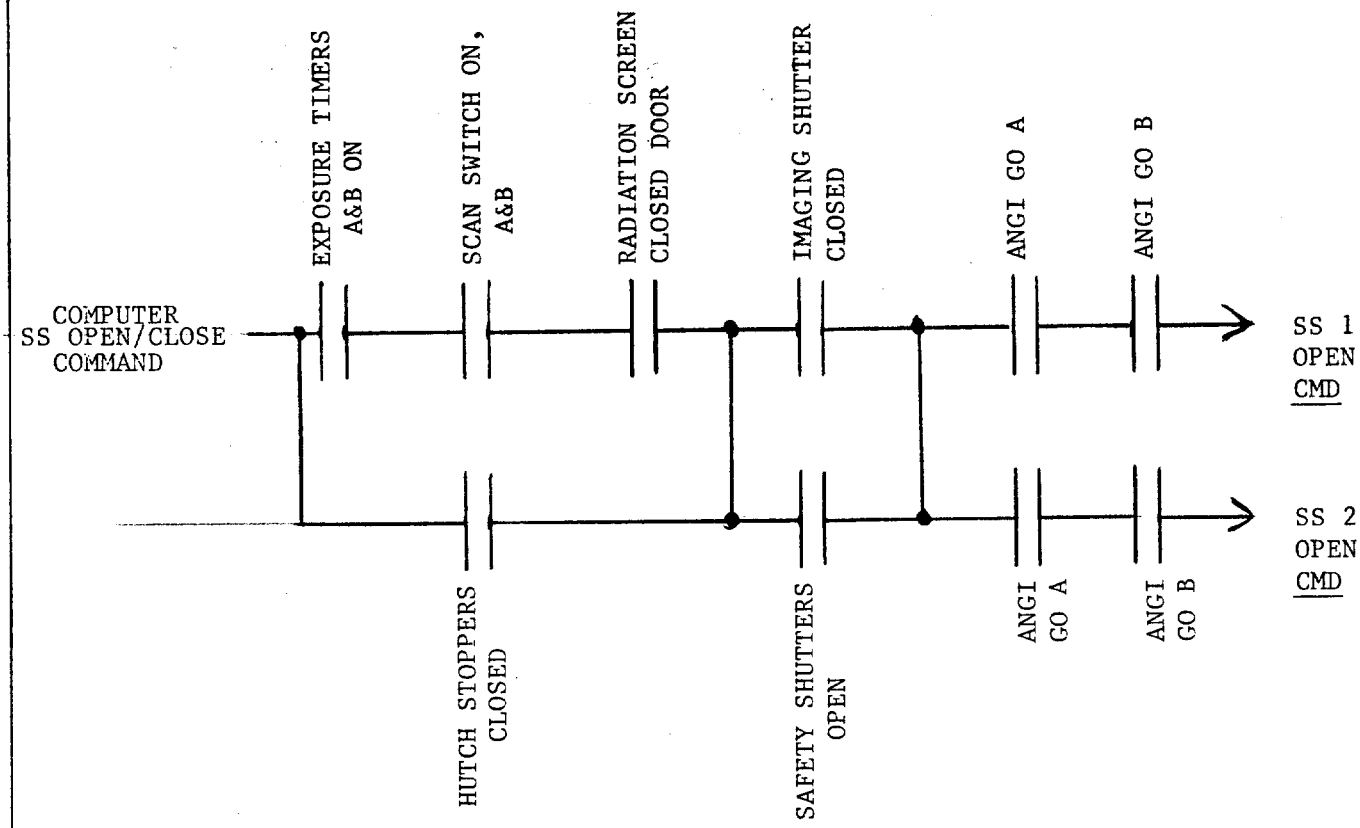

CLOSED CMD = $\overline{\text{OPEN CMD}}$

NOTES:

1. IMAGING SHUTTER MUST BE CLOSED TO OPEN SAFETY SHUTTERS. ONCE SAFETY SHUTTERS ARE OPEN, IMAGING SHUTTER MAY BE OPENED.

2. IF HUTCH STOPPERS ARE CLOSED, SAFETY SHUTTERS MAY BE OPENED WITHOUT STARTING THE KEYED TIMER OR CLOSING THE RADIATION SCREEN DOOR.

ANGIOGRAPHY PPS

3.0 IMAGING SHUTTER (I.S.) OPEN/CLOSED COMMAND

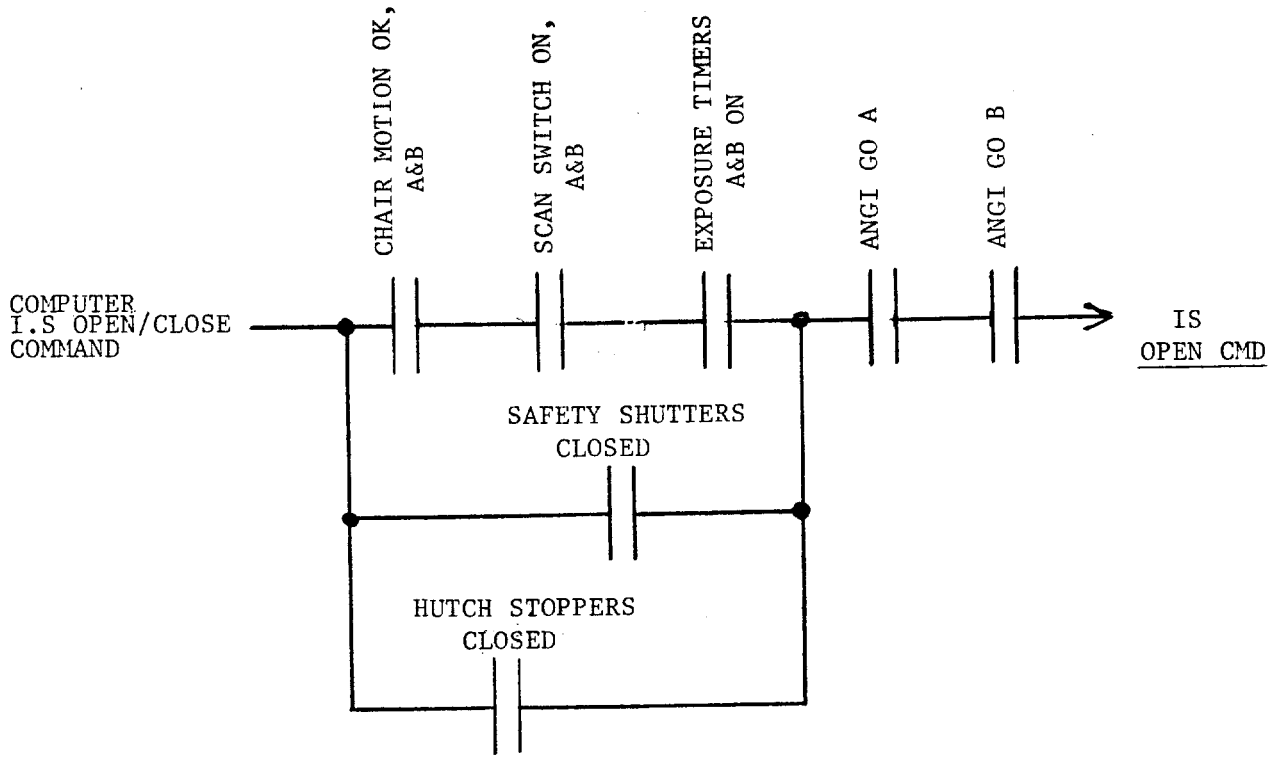

NOTES: 1. IMAGING SHUTTER MAY BE OPENED WITHOUT CHAIR MOTION OK OR THE KEYED TIMER ON IF EITHER THE SAFETY SHUTTERS OR THE HUTCH STOPPERS ARE CLOSED.

ANGIOGRAPHY PPS

4.0 CHAIR MOTION INTERLOCK - REDUNDANT

4.1 FAULT LOGIC

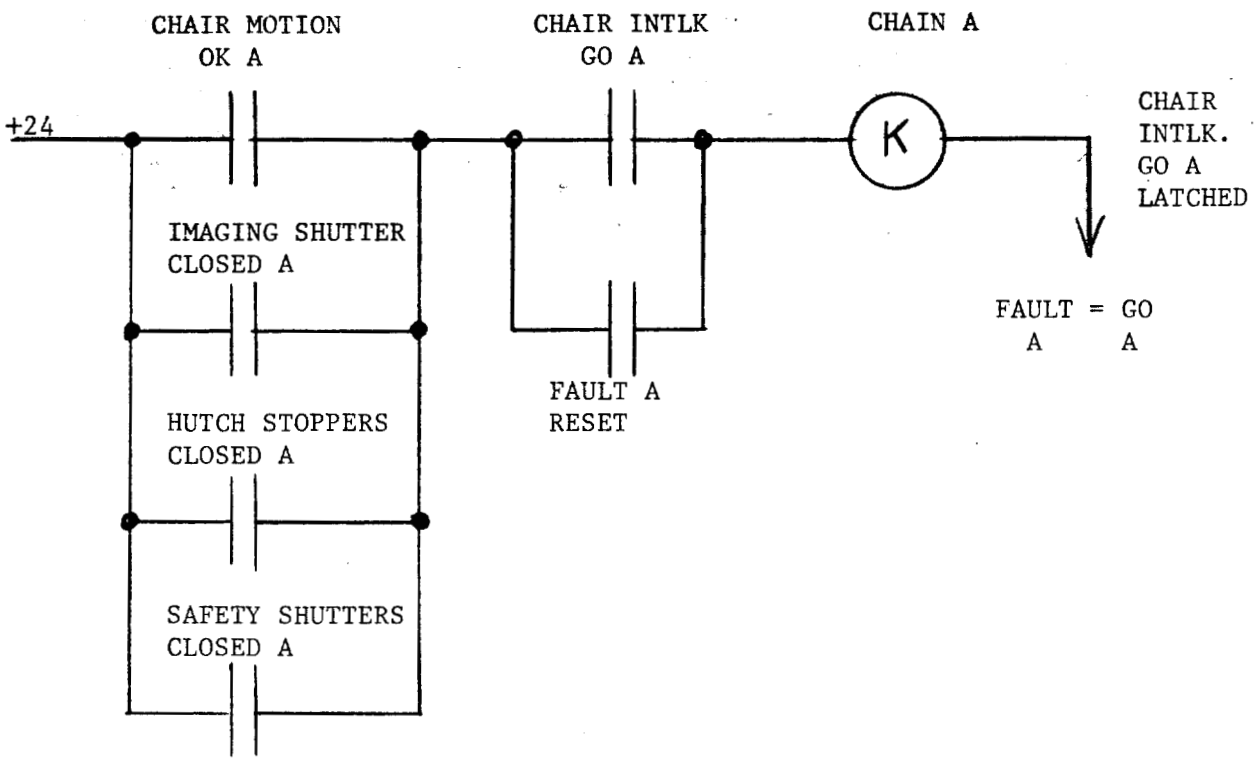

CHAIN B IS LIKEWISE CONFIGURED.

4.2 CHAIR MOTION OK - REDUNDANT

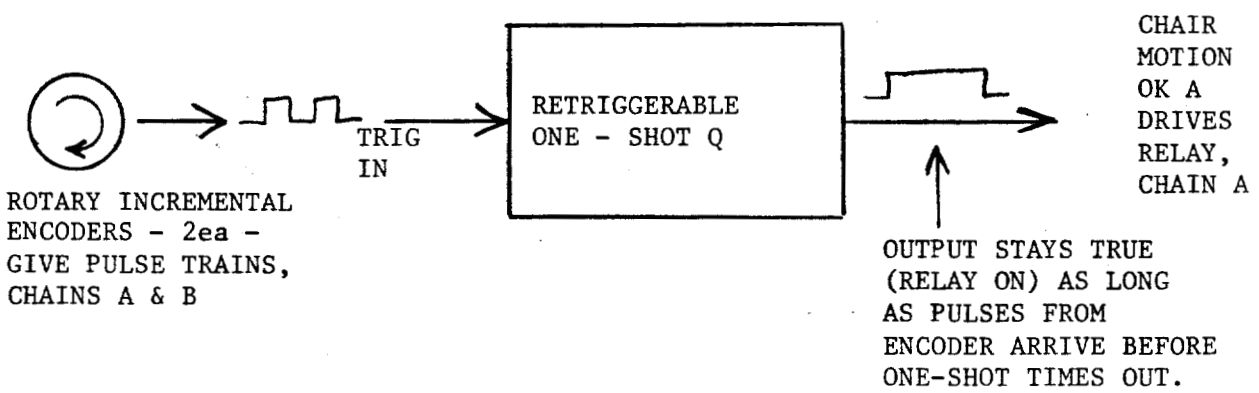

CHAIN B IS SIMILAR

NOTE: EACH ENCODER CIRCUIT (CHAIN A & CHAIN B) HAS ITS OWN INDEPENDENT POWER SUPPLY.

ANGIOGRAPHY PPS

5.0 EXPOSURE TIME OUT INTERLOCK - REDUNDANT

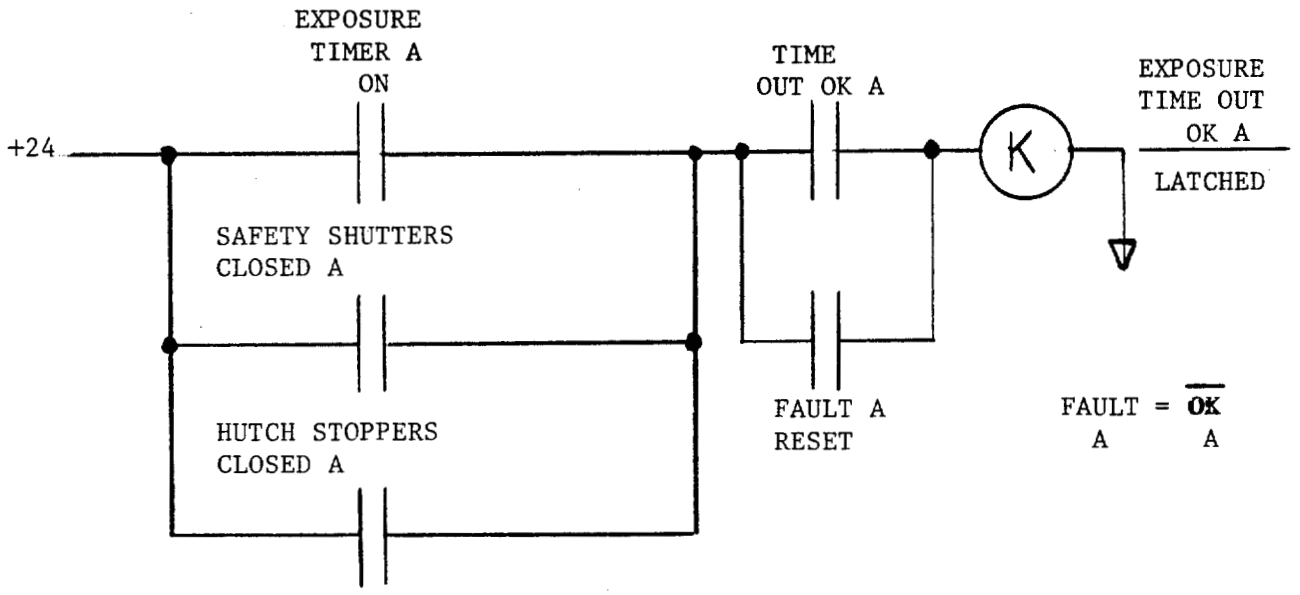

CHAIN B IS LIKEWISE CONFIGURED

NOTE: 1. TIME OUT INTERLOCK FAULTS IF A TIMER (CHAIN A & B) TIMES OUT WITH A SAFETY SHUTTER NOT CLOSED, UNLESS HUTCH STOPPERS ARE CLOSED.

ANGIOGRAPHY PPS

6.0 RADIATION PANEL DOOR INTERLOCK - REDUNDANT

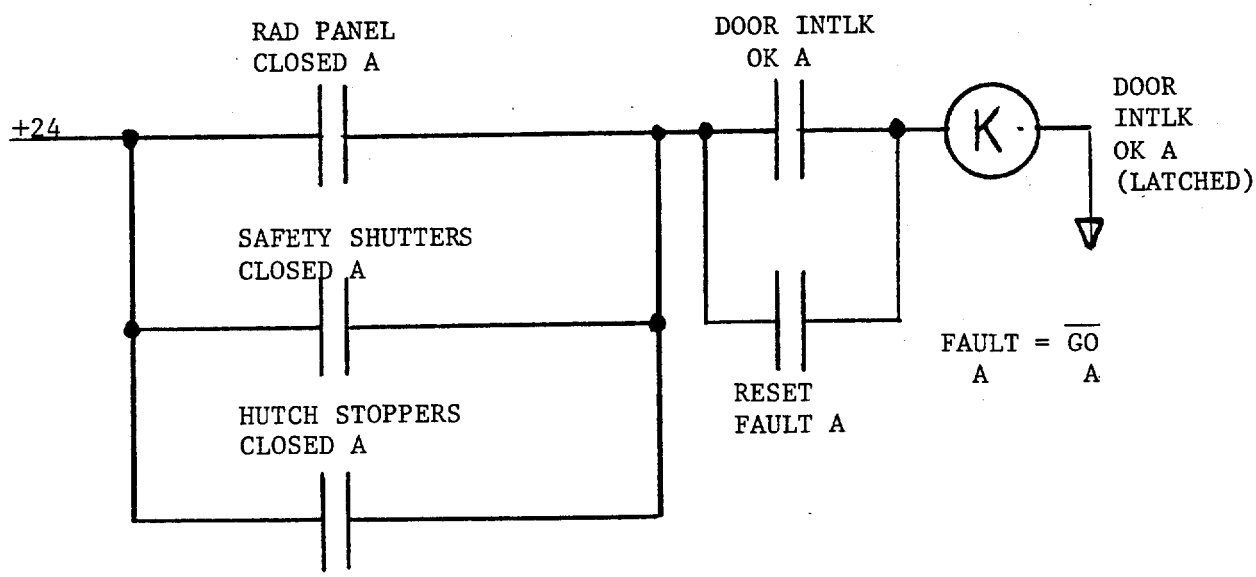

CHAIN B IS LIKEWISE CONFUGURED

ANGIOGRAPHY PPS

7.0 EMERGENCY STOP INTERLOCK - REDUNDANT

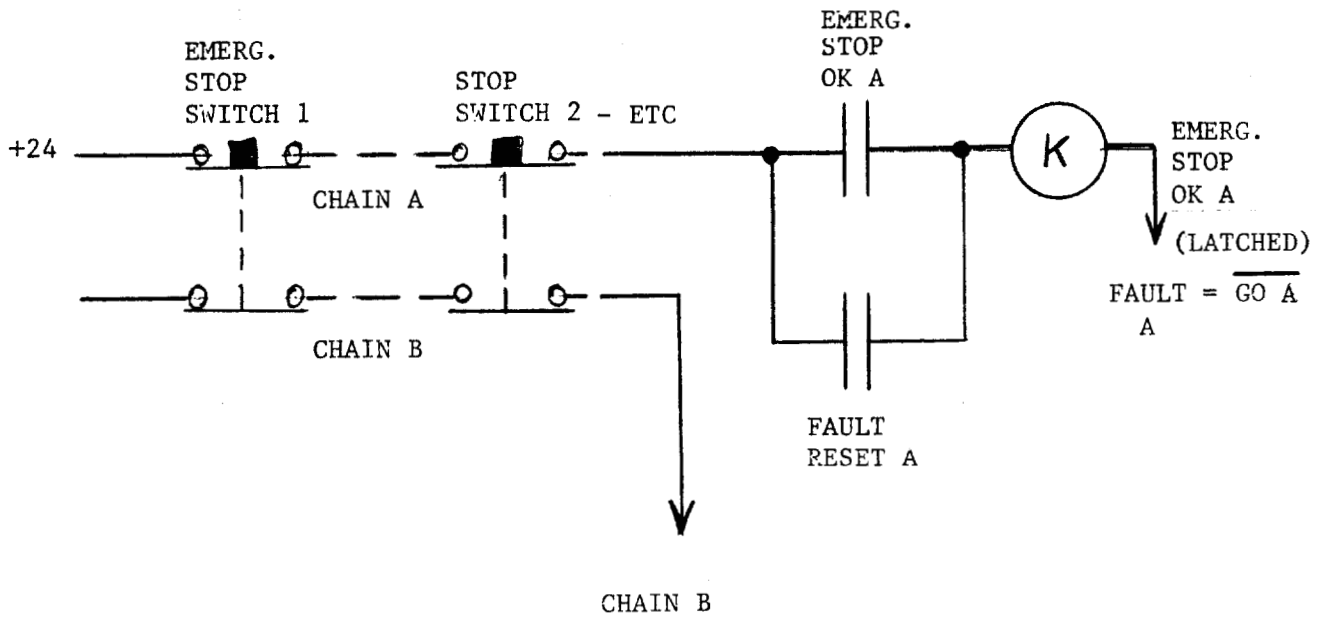

CHAIN B IS IS LIKEWISE CONFIGURED

NOTE: THIS LATCHED FAULT MAY ALSO BE USED TO STOP CHAIR MOTION.

ANGIOGRAPHY PPS

8.0 COMPUTER OK INTERLOCK - WATCHDOG TIMER, ETC

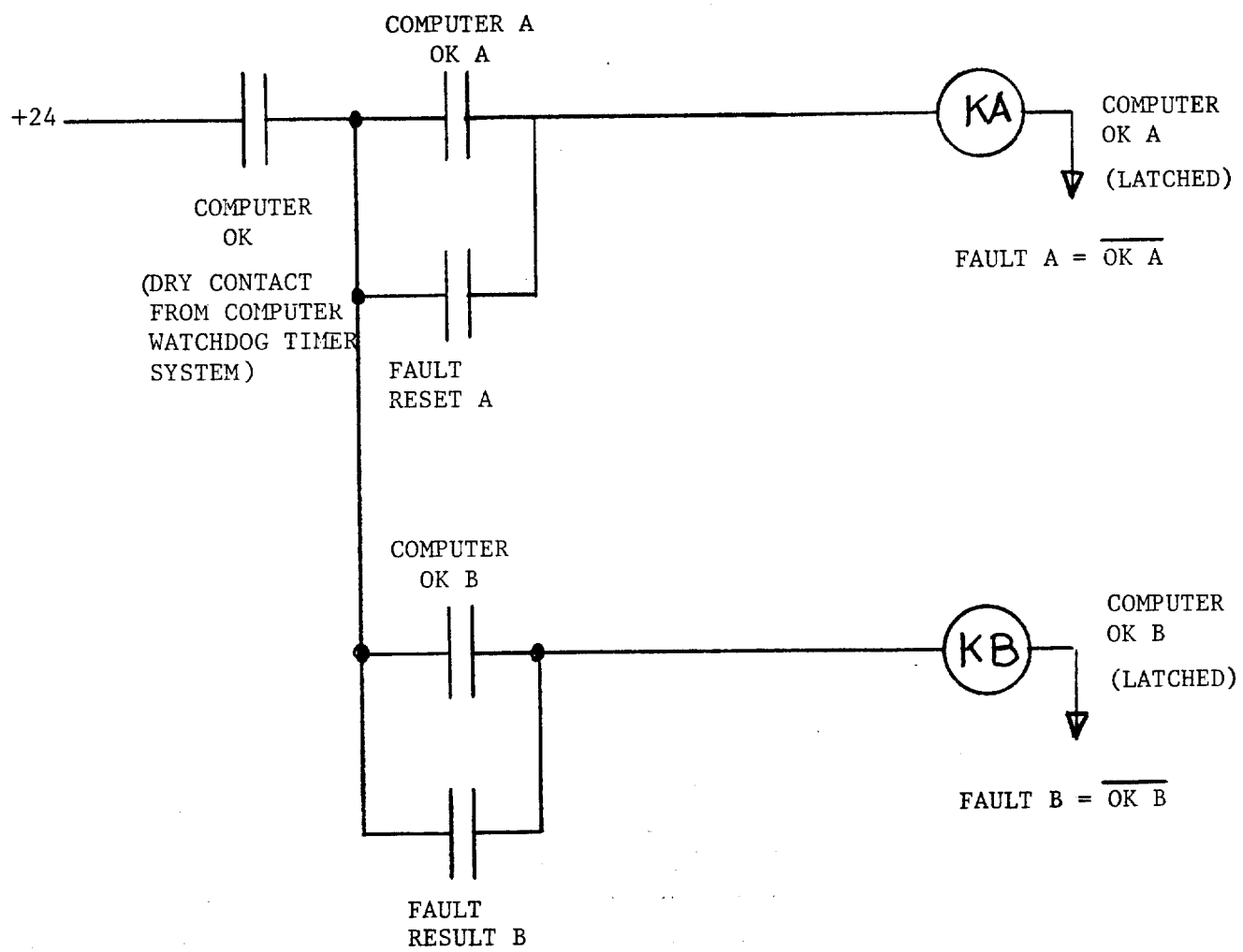

ANGIOGRAPHY PPS

9.0 ANGI GO $\overline{\text{(FAULT)}}$ - REDUNDANT

9.1 GO/FAULT LOGIC

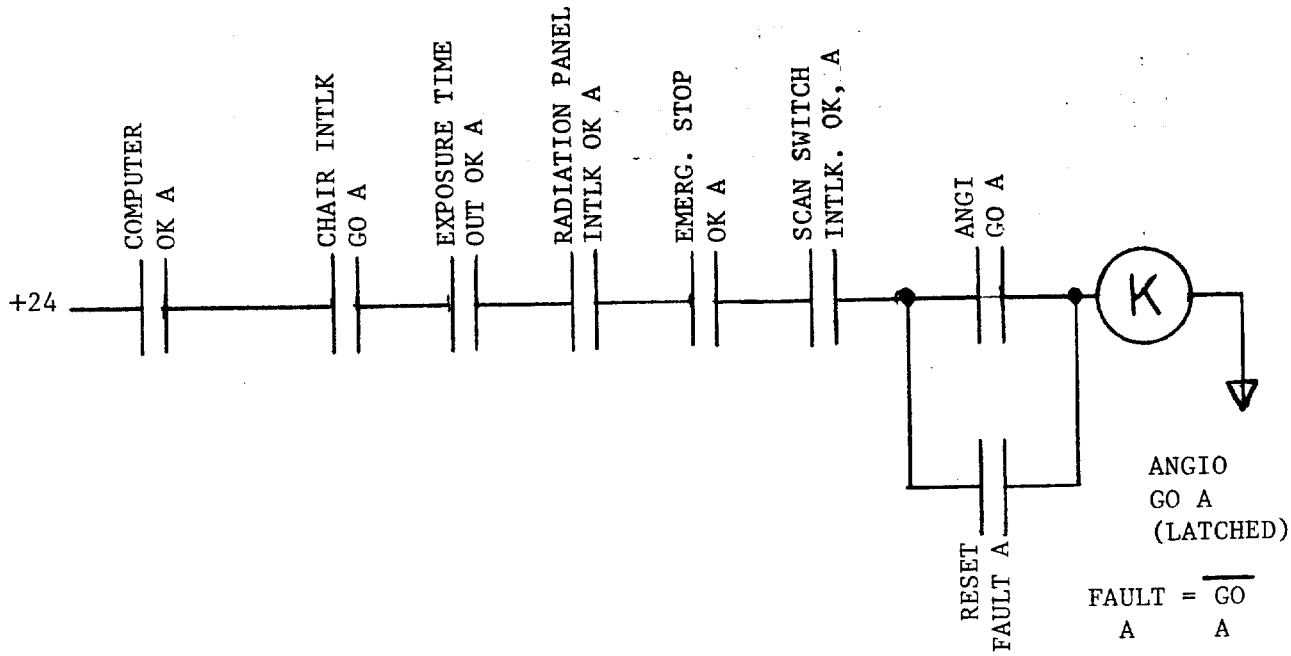

CHAIN B IS LIKEWISE CONFUGURED

9.2 KEYED FAULT RESET

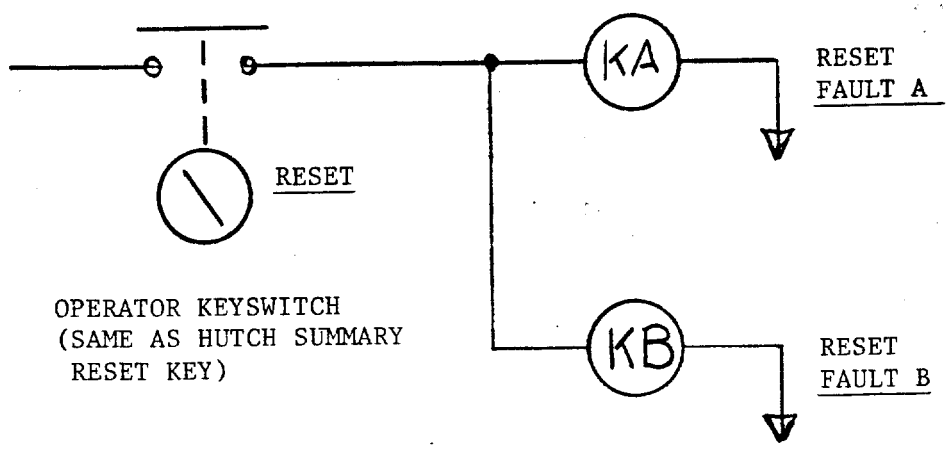

ANGIOGRAPHY PPS

10.0 KEYED TIME CIRCUIT - & SCAN SWITCH

A KEYSWITCH IS ENERGIZED BY A CERTIFIED USER WITH KEY TO INITIATE A START SCAN TIME-OUT PERIOD (∿ 20 SECS). A SCAN SWITCH MUST BE PUSHED WITHIN THIS INTERVAL TO BEGIN A SCAN (SAFETY SHUTTERS WILL BE OPENED, ETC.) THE SCAN SWITCH ON ENABLES REDUNDANT EXPOSURE TIMERS TO BE TRIGGERED WHEN THE IMAGING SHUTTER FIRST OPENS. THE SCAN SWITCH MUST BE HELD ON FOR THE SAFETY & IMAGING SHUTTERS TO BE OPENABLE. SEE Pg.13 FOR SCAN SWITCH INTERLOCK. RELEASING SCAN SWITCH WILL NOT CAUSE A FAULT IF SAFETY SHUTTERS OR HUTCH STOPPERS ARE CLOSED.

10.1 SCAN SWITCH RELAY FOLLOWERS - REDUNDANT

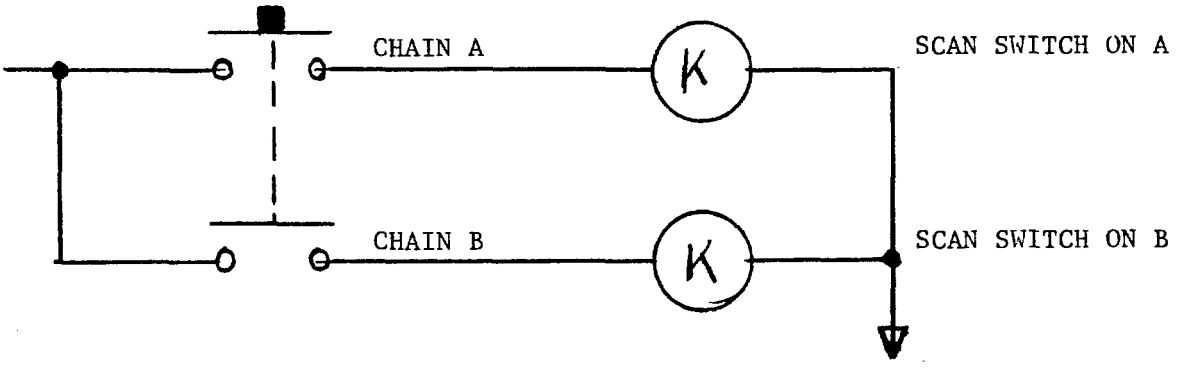

10.2 START SCAN ENABLE KEYSWITCH & TIMER

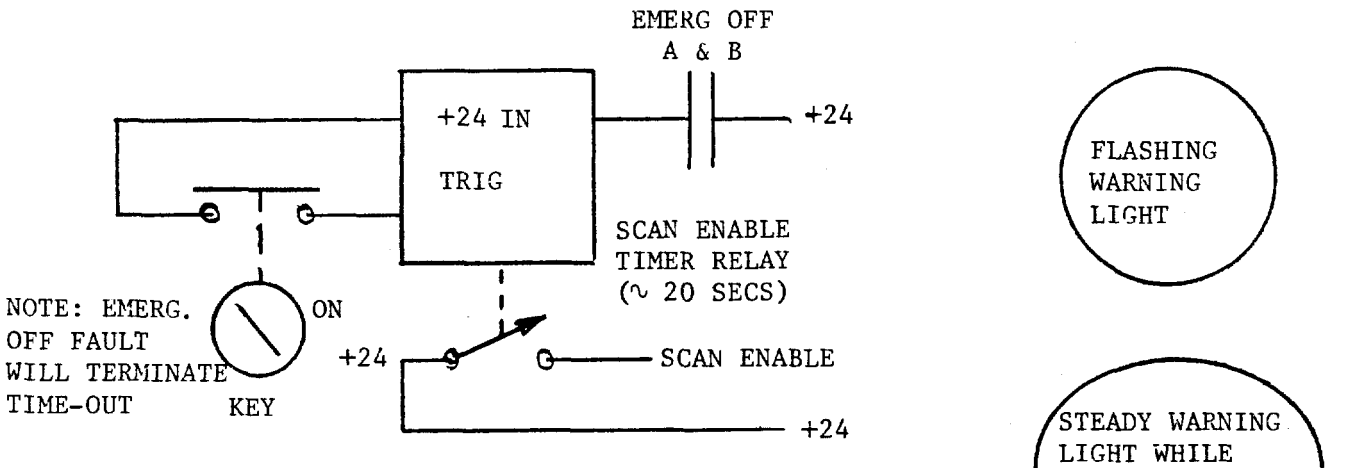

10.3 EXPOSURE TIMER - REDUNDANT

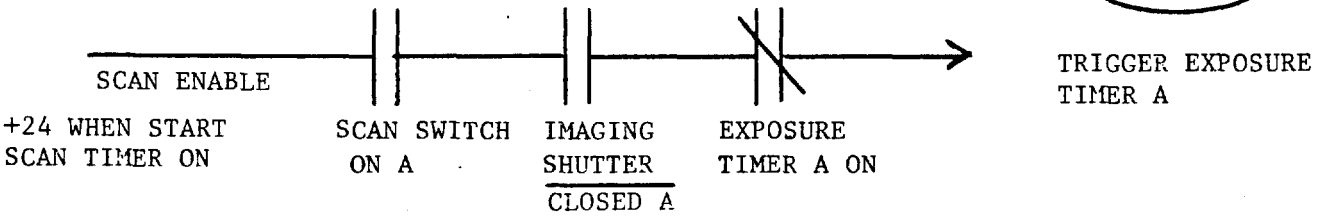

0022000 CHAIN B IS LIKEWISE CONFIGURED

ANGIOGRAPHY PPS

11.0 ANGI ON/OFF LINE CIRCUIT - REDUNDANT

11.1 ON LINE FOLLOWER RELAYS

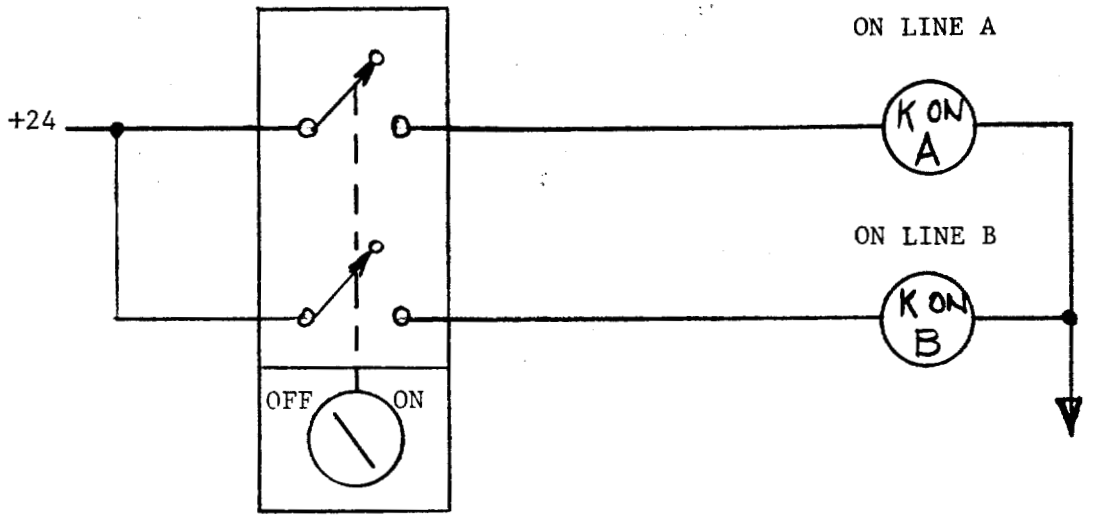

ON/OFF LINE
KIRK LOCK SWITCH

11.2 HUTCH DOOR BYPASS

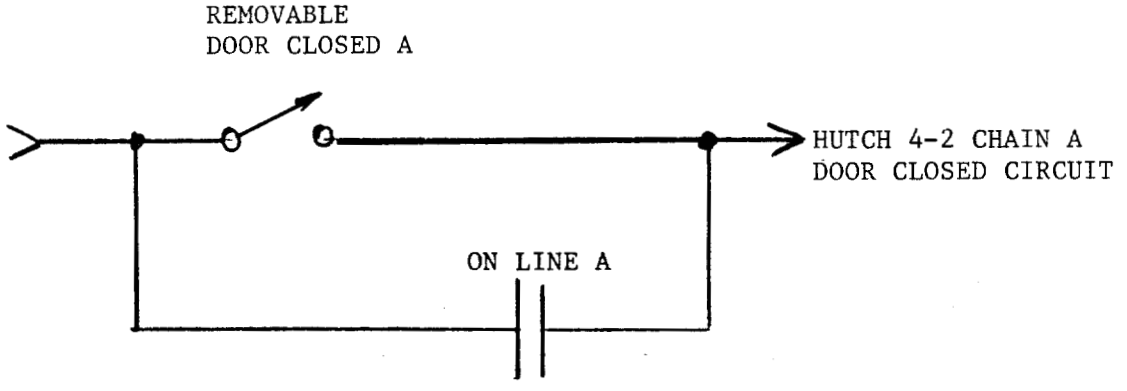

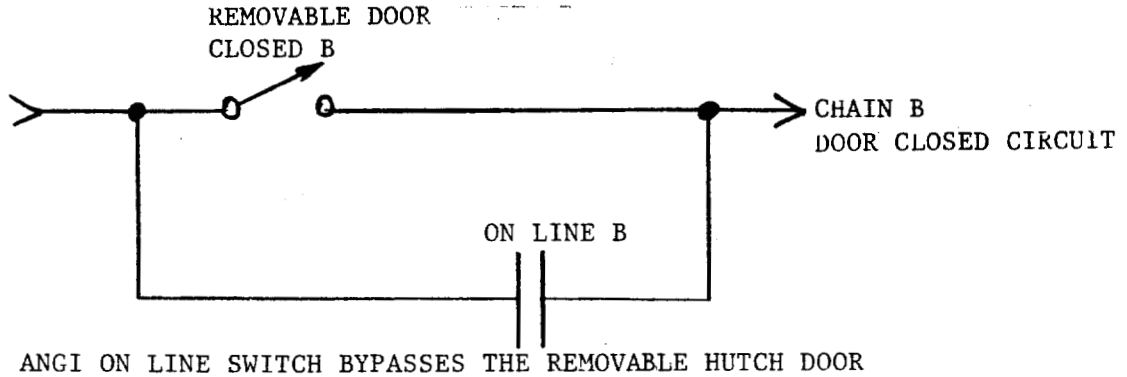

NOTES: 1. ANGI ON LINE SWITCH BYPASSES THE REMOVABLE HUTCH DOOR (REDUNDANT CHAINS A & B)

ANGIOGRAPHY PPS

12.0 INTERACTION WITH HUTCH PROTECTION SYSTEM (HPS)

12.1 HUTCH STOPPER STATUS

ANGI RECEIVES HUTCH STOPPERS HS1 AND HS2 OPEN AND REDUNDANT (CHAINS A & B) CLOSED STATUS

12.2 HUTCH DOOR ADDITIONS

ANGIOGRAPHY MONOCHROMATOR, ROTATING DRUMS, SAFETY SHUTTERS, AND IMAGING SHUTTER ARE ALL ENCLOSED IN A SHIELDED ENCLOSURE INTERLOCKED WITH REDUNDANT SWITCHES AND LOCKED WITH AN OPERATORS PADLOCK (SSRL OPERATOR CARRIES KEY). THE SWITCHES ARE CONNECTED INTO THE HUTCH DOOR CIRCUITS, AND WILL CAUSE AN HPS FAULT (HUTCH SUMMARY FAULT-DUMP SPEAR) IF NOT CLOSED WHILE HUTCH STOPPERS ARE NOT CLOSED.

12.3 HUTCH DOOR REMOVAL

THE REAR DOOR OF THE BL IV-2 HUTCH IS REMOVED FROM THE HPS DOOR CIRCUIT WHEN THE ANGI INTERLOCK IS "ON LINE" - SEE Pg.11

12.4 HUTCH STOPPER OPEN ENABLE FROM ANGI

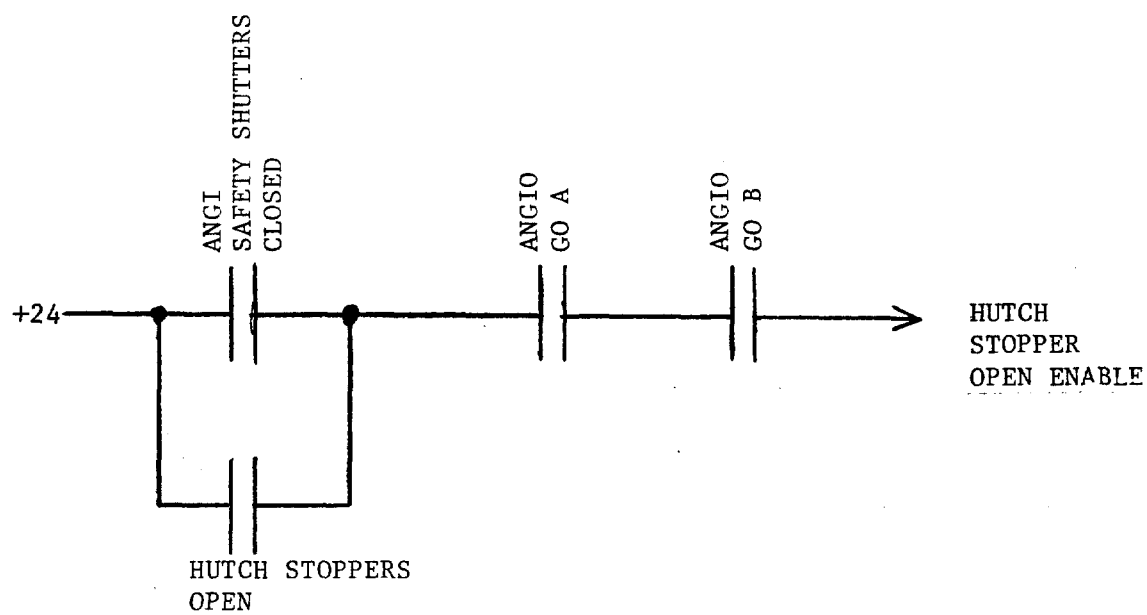

NOTES: 1. ANGI SAFETY SHUTTERS MUST BE CLOSED TO OPEN HUTCH STOPPERS. ONCE HUTCH STOPPERS ARE OPEN, SAFETY SHUTTERS MAY BE OPENED.

ANGIOGRAPHY PPS

13.0 SCAN SWITCH INTERLOCK (DEAD MAN SWITCH)-REDUNDANT

13.1 LOGIC

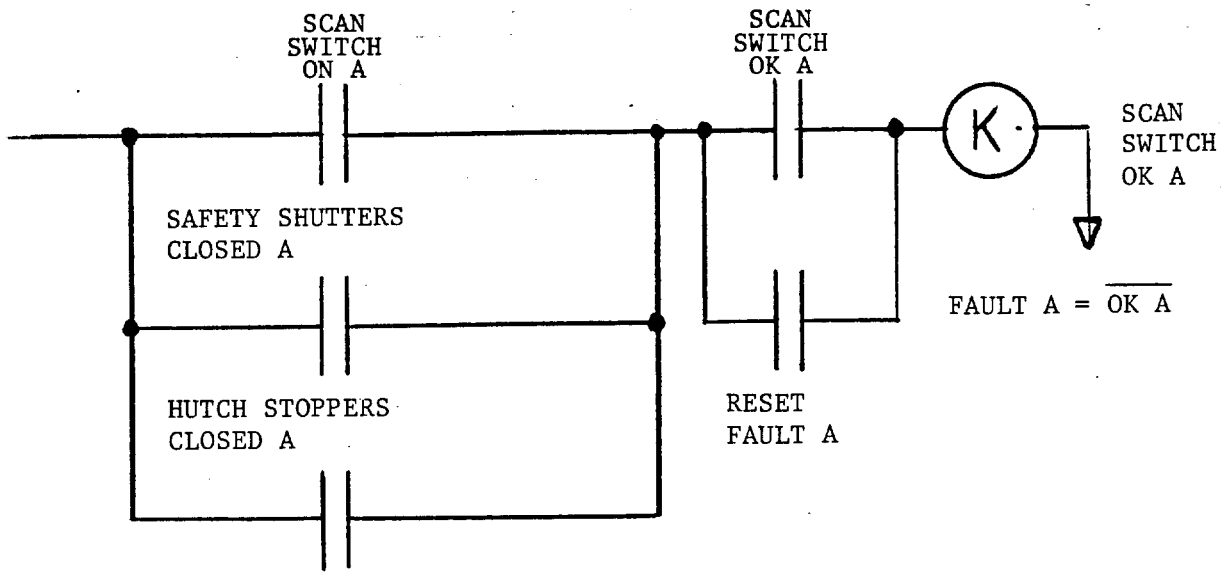

CHAIN B IS LIKEWISE CONFIGURED

NOTE: 1. SCAN SWITCH MUST BE HELD CLOSED DURING ENTIRE EXPOSURE TIME AS DEFINED BY THE SAFETY SHUTTERS BEING OPEN. RELEASING BUTTON WHILE SAFETY SHUTTERS CLOSED, OR WHILE HUTCH STIPPERS CLOSED, WILL NOT CAUSE A FAULT.

13.2 SCAN SWITCH FOLLOWER RELAYS

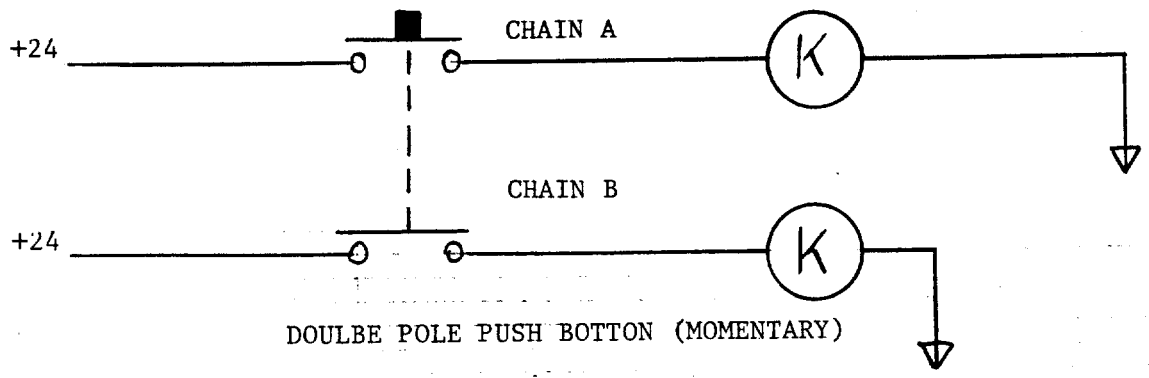

S S R L M E M O R A N D U M

Date: January 29, 1986

TO: DISTRIBUTION

FROM: JOHN CERINO

SUBJECT: HUMAN ANGIOGRAPHY EXPERIMENTAL REVIEW

The Stanford Angiography Group intends to request beam time in the April dedicated run to perform the first human angiograms. The medical protocols have been approved by the Stanford Medical Committee for the Protection of Human Subjects in Research.

The SLAC Radiation Safety Committee will conduct a review of the safety aspects of the equipment, interlocks and procedures. That review is scheduled for Thursday, February 13,1986 at 1:30. The venue is SLAC A&E Rm. 223 (Yellow Room).

Because of your special experience, I request that you participate in the above review representing SSRL and report your impressions to the Director.

The experimenters are preparing a package of descriptive material which I will forward to you.

Please contact me to confirm your ability to attend. Thank you.

dist:

CARL CORK
ETHAN MERRITT
BRAD YOUNGMAN

cc:
A. BIENENSTOCK
A. BOYARSKI, Chmn. SLAC Rad. Saf. Comm.
K. CANTWELL, Sec. SSRL Saf. Comm.
R. FINSTON, Dir. Stanford Health Physics
B. WILKEN

OFFICE MEMORANDUM STANFORD UNIVERSITY OFFICE MEMORANDUM STANFORD UNIVERSITY

→ John Cerino
From: E. Rubenstein

RECEIVED
JAN 17 1986
SSRL

DATE: January 7, 1986

TO: E. Rubenstein, M.D.,
R. Hofstadter, Ph.D. & D.C. Harrison, M.D.
Department of Medicine

FROM: Chairman, Medical Committee for the
Protection of Human Subjects in Research

PROTOCOL TITLE:
K-edge Angiography with Synchrotron X-rays.
(Grant: K-edge Subtraction Angiography with Synchrotron X-rays)

The Committee approved human subjects involvement in your research project on January 7, 1986.

The expiration date of this approval is January 6, 1987. If this project is to continue beyond that date, please submit an updated proposal in advance for the Committee's re-approval. If this proposal is used in conjunction with any other human experimentation or if it is modified in any way, it must be re-approved for these special circumstances. In addition, the Committee requests prompt notification of any complications which may occur during any experimental procedure.

All continuing projects and activities must be reviewed and re-approved at least annually by the Committee. Committee approval of any project is for a maximum period of one year. It is the responsibility of the investigator to resubmit the project to the Committee for annual review.

for Kathy McClelland
Don R. Goffinet, M.D., Chairman

cc: Sponsored Projects
Marshall O'Neill

0022005

Funding Agency: (NIH HL29024; NIH HV38039; DOE DE-AT03-84ER60200) (R)
Period of Time: 01/07/86 through 01/06/87
Investigational New Drugs: N, N/A
Investigational New Device: N, N/A
Cooperating Institution: N

RENEWAL

protocol #

REQUEST FOR INSTITUTIONAL APPROVAL OF PROJECT INVOLVING HUMAN SUBJECTS AT RISK
THE MEDICAL COMMITTEE FOR THE USE OF HUMAN SUBJECTS IN RESEARCH

To: Kathy Callahan, 851 Welch Rd., #115

Date: November 20, 1985

PI for Grant/Project: Robert Hofstadter, Ph.D. MD/PhD Title: Professor
Other Investigators: Edward Rubenstein, M.D. MD/PhD Professor (Clinical)
Donald C. Harrison, M.D. MD/PhD Professor

Title of Research Project: K-edge Angiography with Synchrotron X-rays

(AND GRANT, IF DIFFERENT) K-edge Subtraction Angiography with Synchrotron X-rays

Contract/Grant # 1 R01 HL29024-01-A1 NIH Grant 7/1/83-6/30/86
1 HV-38039 Sponsor NIH Contract Period 7/1/83-6/30/86
DE-AT03-84ER60200 DOE Grant 2/1/84-1/31/87

Investigator's Address Rm. TC-129 Dept. Medicine Ext. 7-7188

Sponsored X Unsponsored ___ Investigational Drug ___ Investigational Device ___

Department Chairman Alex Hamer (for CBIM)
SIGNATURE

REVIEW PROCESS - Check One: REGULAR REVIEW ___ PLEASE SEND 4 COPIES (DO NOT STAPLE)

EXPEDITED REVIEW ___ PLEASE SEND 2 COPIES (See regulations on reverse side of this form)
(VA Not Eligible) ___ Paragraph number under which expedited review is requested.

APPROVAL OF THE HUMAN SUBJECTS COMMITTEE SHOULD BE OBTAINED PRIOR TO SUBMISSION OF THE RESEARCH PROJECT TO HHS/NIH. THE COMMITTEE MEETS THE FIRST TUESDAY OF EVERY MONTH AND APPLICATIONS SHOULD REACH THE COMMITTEE 30 DAYS PRIOR TO THE MEETING DATE.

PLEASE PROVIDE INFORMATION IN THE FOLLOWING AREAS AND ATTACH TO THIS FORM:

1. Protocols Involving Use of Radioactive Materials.
   A separate form for projects involving radioactive materials should be obtained from the Health Physics Department, Room 67, Encina Hall, X-3201.

2. Number of Subjects Involved to Date.

3. Description of Results to Date.

4. Problems or Complications.

5. Description of Remainder of Project.

6. Describe Any Changes Since Original Approval.

7. Attach the Consent Form(s) You are Using for this Study.
   (Even if it is the same as previously approved.)

OR:

If this project is the same as a previously approved study under a different name, please supply the title, investigator, date approved and consent form approved by Committee:

002200b

6/84

Approval Date

RENEWAL

Request for Institutional Approval of the Protocol Entitled:
"K-Edge Subtraction Angiography with Synchrotron X-rays"

Additional Information:

1. Protocols Involving Use of Radioactive Materials.

   Radioactive materials are not used in this project.

2. Number of Subjects Involved to Date.

   Human subjects have not been studied to date. Experiments have been conducted on anesthetized dogs. The first experiments on human subjects are currently scheduled for April 1986.

3. Description of Results to Date.

   The left anterior descending, the right coronary and the circumflex arteries have been visualized following transvenous injections of contrast agent in anesthetized dogs.

4. Problems or Complications.

   None

5. Description of Remainder of Project.

   As previously described.

6. Describe Any Changes Since Original Approval.

   Results of experiments on anesthetized dogs indicate that some injections of contrast agent may be made into a central vein, such as the superior or inferior vena cava, rather than into a vein in the upper extremity. For the central venous injections, the injection rate will vary from 5-20 ml per second. For the higher injection rates, a power injector will be employed.

7. Consent forms are attached.

INFORMED CONSENT FOR 'CHROTRON ANGIOGRAPHY BY MEANS 'VENOUS INJECTION OF CONTRAST AGENT

You are invited to participate in a study of angiography. We hope to develop a means of visualizing arteries without the direct injection into the arteries of x-ray contrast agents. You were selected as a possible participant in this study because your physician(s) has recommended that you undergo angiography by the invasive technique, involving arterial catheterization and the direct injection of contrast agents into the arteries.

If you decide to participate, we will perform an angiographic procedure (coronary, cerebral, other,) by means of a venous injection of contrast agent, employing x-rays produced at the Stanford Synchrotron Radiation Laboratory. You will be given injections into a vein of a radiographic contrast agent, as employed in routine clinical practice. The injection may be given directly into a vein in the arm or may be given into a vein in the chest. In the latter instance a flexible, hollow tube, called a catheter, will be inserted into a vein in an extremity (usually the arm), and the catheter is then advanced into the chest so that its tip is in a central vein adjacent to the intake chamber (right atrium) of the heart. The contrast agent will then be administered using a power injector, at a rate up to 20 ml/kg of body weight per injection. Following the injection, scanning digital radiographs will be taken of the arterial structures being studied. The procedure will probably require 1/2 to 1 1/2 hours. The risks of this procedure include the following: severe allergic (anaphylactoid) reaction to the iodine contrast agent; mechanical tear of a vein; impaired kidney function; reaction to local leakage of dye; the radiation exposure inherent in an x-ray examination.

It would be impractical and even misleading to describe in detail all of the possible risks and complications which might result from the procedure. Any questions should be discussed with a member of the angiography team who will be performing the study. This person will review the procedure as is planned for your individual case.

Potential benefits that may be accrued to you relate to information about the status of the arteries to be studied. Such information might be accumulated without the necessity of performing invasive arterial injections. We can not or do not guarantee or promise that you will receive any benfits from this study. After analyzing the results of this examination, your physician may recommend that you undergo the alternative procedure, that of routine angiography employing arterial catheterization and direct injection of radiocontrast agents into the arteries.

Any data that may be published in scientific journals will not reveal the identify of the subjects. In the interest of public safety, patient imformation will be provided to federal and regulatory agencies as required.

There will be no fee charged for the non-invasive angiogram.

Your decision whether or not to participate will not prejudice you or your medical care. If you decide to participate, you are free to withdraw your consent and to discontinue your participation at any time without prejudice to you or effect on your medical care. If you have any questions, we expect you to ask us. If you have any additional questions later, we will be pleased to try to answer them.

In the event of physical injury that arises solely out of the negligence of the Stanford Univeristy Medical Center or its staff in this study, reimbursement for expenses incurred for necessary medical treatment and hospitalization is available. For further information,

please call 497-5244 or write the Medical Center Committee for the Protection of Human Subjects at 851 Welch Road, Room 115, Palo Alto, California, 94304. In addition, if you are not satisfied with the manner in which this study is being conducted, you may report any complaints to the same telephone number and address.

Persons who participate in a medical experiment are entitled to certain rights. These rights include but are not limited to the subject's right to: be informed of the nature and purpose of the experiment; be given an explanation of the procedures to be followed in the medical experiment, and any drug or device to be utilized; be given a description of any attendant discomforts and risks reasonably to be expected; be given an explanation of any benefits to the subject reasonably to be expected, if applicable; be given a disclosure of any appropriate alternatives, drugs, or devices that might be advantageous to the subject, their relative risks and benefits; be informed of the avenues of medical treatment, if any, available to the subject after the experiment if complications should arise; be given an opportunity to ask any questions concerning the experiment or the procedures involved; be instructed that consent to participate in the medical experiment may be withdrawn at any time and the subject may discontinue participation without prejudice; be given a copy of the signed and dated consent form; and be given the opportunity to decide to consent or not to consent to a medical experiment without the intervention of any element of force, fraud, deceit, duress, coercion or undue influence on the subject's decision.

YOUR SIGNATURE INDICATES THAT YOU HAVE READ AND UNDERSTAND THE ABOVE INFORMATION, THAT YOU HAVE DISCUSSED THIS STUDY WITH THE PRINCIPAL INVESTIGATOR(S) AND HIS OR HER STAFF, AND THAT YOU HAVE DECIDED TO PARTICIPATE BASED ON THE INFCRMATION PROVIDED. A COPY OF THIS FORM IS AVAILABLE TO YOU UPON REQUEST.

_____ _____

Signature Date

_____

Signature of Investigator or Witness

11/81

STANFORD UNIVERSITY HOSPITAL
STANFORD MEDICAL CENTER

CONSENT TO OPERATION, ADMINISTRATI OF ANESTHETICS, AND FOR DIAGNOSTI OR THERAPEUTIC PROCEDURES

Date _____ / _____ NAME OF PATIENT

Hour _____ NAME OF ATTENDING PHYSICIAN

NAME OF SURGEON OR PHYSICIAN PERFORMING PROCEDURE

1. Your physician(s) has determined that the operation or procedure listed below may be beneficial in the diagnosis or treatr of your condition. All surgical operations and diagnostic and therapeutic procedures involve risks of complication, inj or even death, from both known and unknown causes. No warranty or guarantee has been made as to result or cure.

2. OPERATION/PROCEDURE TO BE PERFORMED: _____

3. Physicians performing professional services, such as anesthesia, radiology, pathology and the like, are not employees of Hospital. These physicians are either in private practice in the community or faculty members of the Stanford Univer School of Medicine.

4. Stanford University Hospital and Clinics is an educational institution, and as part of the medical education program resid interns, medical students, postgraduate fellows, and other health care students may, under the supervision of the atten physician, participate in the care of teaching patients.

5. As a patient you have a right to receive as much information as you may need in order to give informed consent or to re the recommended course of treatment. Except in emergencies, your physician(s) should describe in language you can un stand the proposed treatment or procedure, the medically significant risks involved, and the alternate courses of treatmen nontreatment, including the respective risks of each. If you have questions, you should consult your physician(s) prio giving your written consent to such operation or procedure.

Having read the above and having received the above information from my physician(s), I hereby authorize the above-na physician(s) and any associates or assistants of my physician(s) to perform the above-named operation or procedure and to pro such additional services as may be deemed medically reasonable and necessary, including, but not limited to, the administra and maintenance of anesthesia and services involving pathology and radiology. I further authorize the pathology service to us discretion in the disposal of any severed tissue or member, except: _____

SIGNATURE OF PATIENT, LEGAL GUARDIAN, CONSERVATOR OR LEGAL REPRESENTATIVE

SIGNATURE OF WITNESS

(If patient is a minor or unable to sign, complete the following.)

Patient is a minor _____, or is unable to sign because _____

SIGNATURE OF FATHER

SIGNATURE OF MOTHER

LEGAL GUARDIAN, CONSERVATOR, OR LEGAL REPRESENTATIVE

15-01 (Rev. 1/81)

(Vea en el reverso la versión española)

0022012

HOSPITAL DE LA UNIVERSIDAD DE STANFORD
CENTRO MEDICO DE STANFORD

PERMISO PARA OPERACION, PARA LA APLICACION DE ANESTESICOS Y PARA PROCEDIMIENTOS DIAGNOSTICOS O TERAPEUTICOS

Fecha _____ / _____
NOMBRE DEL PACIENTE

Hora _____ _____
NOMBRE DEL MÉDICO DE CABECERA

_____
NOMBRE DEL CIRUJANO O MÉDICO A CARGO DEL PROCEDIMIENTO

1. Su Médico (o Médicos) ha determinado que la operación o procedimiento que se consigna más adelante puede ser de beneficio para el diagnóstico o tratamiento de su estado de salud. Todas las operaciones quirúrgicas y procedimientos diagnosticos y terapeuticos inplican riesgos de complicación, lesión o aún muerte, de causas conocidas o desconocidas. Ninguna garantía o seguridad se ha determinado en cuanto al resultado o cura.

2. OPERACION/PROCEDIMIENTO A EJECUTAR: _____

_____

_____

3. Los médicos que prestan servicios profesionales tales como anestesia, radiología, patología y servicios semejantes no son empleados del hospital. Estos médicos se dedican a la práctica privada en la comunidad o son miembros de la Facultad de Medicina de la Universidad de Stanford.

4. El Hospital y la Clínica de la Universidad de Stanford constituyen una institución educacional, y como parte del programa de educación médica, los residentes, los internos, los estudiantes de medicina, los becarios graduados y otros estudiantes del cuidado de la salud pueden, bajo la supervisión del Médico en asistencia, participar en el cuidado de los pacientes que están bajo el plan de estudios.

5. Como paciente, usted tiene derecho a recibir tanta información como usted pueda necesitar a fín de dar el correspondiente permiso, o a rechazar o negar el curso del tratamiento recomendado. Excepto en casos de emergencia su Médico (o Médicos) deben describir, en lenguage que usted pueda entender, el tratamiento o procedimiento propuesto, los significantes riesgos médicos comprendidos y los métodos alternativos de tratamiento o no tratamiento, incluyando los respectivos riesgos de cada uno. Si usted desea saber algo o tiene preguntas que hacer, usted debe consultar a su Médico (o Médicos) antes de otorgar su permiso por escrito para tal operación o procedimiento a seguir.

Habiendo leído lo explicado anteriormente y habiendo recibido la información anterior de mi Médico (o Médicos), por la presente autorizo al Médico (o Médicos) mencionado anteriormente y a cualquiera de sus colaboradores o ayudantes de mi Médico (o Médicos) para llevar a cabo la operación que se detalla anteriormente o procedimiento a seguir y a proveer tales servicios adicionales como fueren razonables y necesarios desde el punto de vista médico, incluyendo, pero no limitados, la aplicación y mantenimiento de anestesia y servicios de patologia y de radiologia. También autorizo al servicio patológico para usar su criterio en la disposición de cualquier tejido o miembro removido, excepto: _____.

_____
FIRMA DEL PACIENTE, TUTOR, ENCARGADO, O REPRESENTATANTE LEGAL

_____
FIRMA DEL TESTIGO

0022013

(Si el Paciente es menor de edad o no puede firmar, complete lo siguiente.)

El Paciente es menor de edad _____, o no puede firmar porque _____.

_____ _____
FIRMA DEL PADRE FIRMA DE LA MADRE

_____
FIRMA DEL TUTOR, DEFENSOR O REPRESENTANTE LEGAL

From: CERINO 13-DEC-1985 11:22
To: A,CAROL,CERINO
Subj: ANGIOGRAPHY SAFETY MEETING

THESE ARE NOTES, NOT MINUTES, ON THE ANGIOGRAPHY SAFETY DISCUSSION HELD TODAY.

ANGIOGRAPHY GROUP ATTENDEES: JOHN OTIS, AL THOMPSON.
SLAC: DON BUSICK, NISSI IPE, JOHN JASBERG, GARY WARREN.
SSRL: JOHN CERINO, BOB HETTEL.

1. THE STANFORD HUMAN SUBJECTS COMMITTEE HAS REVIEWED THE MEDICAL PROTOCOL FOR THESE EXPERIMENTS; BUT HAS NOT CONCERNED ITSELF WITH THE HARDWARE OPERATION OR SAFETY. AL THOMPSON WILL SEND A COPY OF THE HSC APPROVAL TO CERINO FOR SSRL.

2. CERINO ASKED WHAT FEDERAL OR LOCAL REGULATIONS MIGHT APPLY TO THIS EXPERIMENT. THOMPSON AGREED TO SOLICIT A RESPONSE FROM THE MEDICAL COLLABORATOR OF THE GROUP.

3. THE EXPERIMENT WILL BE PRESENTED TO THE SLAC RADIATION COMMITTEE FOR REVIEW IN JANUARY 1986. AS YET NO ONE SEEMS TO HAVE DISCUSSED THIS EXPERIMENT WITH THE PRESENT SLAC DIRECTOR. THE PREVIOUS DIRECTOR HAD REQUESTED A LEGAL ASSESSMENT OF SLAC'S LIABILITY FROM LLOYD SIDES. WARREN AGREED TO SEND A COPY OF HIS RESPONSE TO CERINO FOR SSRL.

4. A DISCUSSION OF INTERLOCK AND DOSE MONITORING SCHEMES TOOK PLACE LEADING TO SEVERAL SUGGESTIONS FOR EQUIPMENT CONFIGURATIONS. THE IDEA OF EXPOSING A FILM OR TLD PACKET WITH THE SUBJECT FOR A HISTORICALLY SECURE DOSE RECORD SEEMED ATTRACTIVE.

5. NO NEXT MEETING WAS SCHEDULED PRIOR TO THE RADIATION COMMITTEE PRESENTATION, BUT I EXPECT THAT SEVERAL OF THE PEOPLE WHO MET TODAY WILL WORK INFORMALLY ON THE SAFETY SYSTEM CONFIGURATION WHICH WILL BE PRESENTED FOR REVIEW AT THAT TIME.

CC:
ATTENDEES
SSRL SAFETY COMM.
B. WILKEN

SSRL BEAM LINE IV-2 ANGIOGRAPHY EXAMINATION ROOM

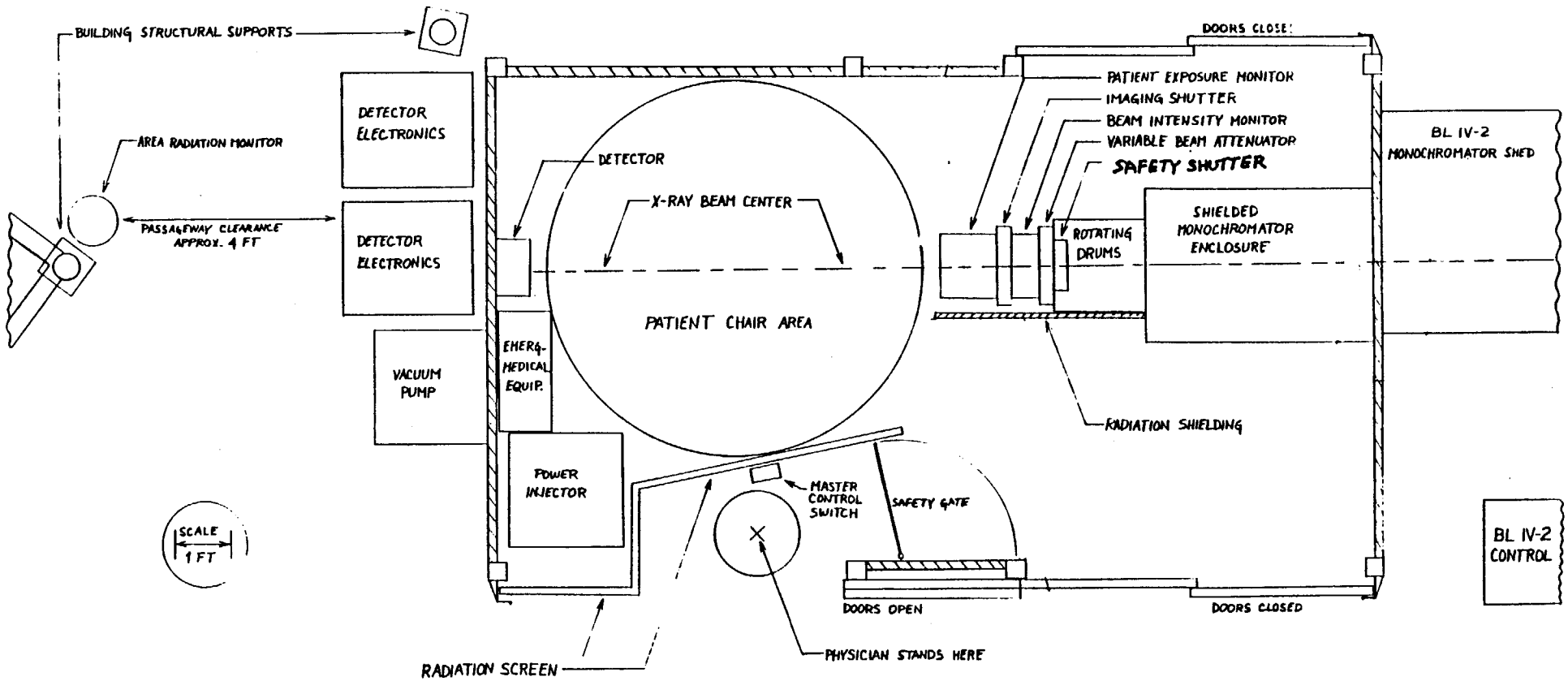

INTERIOR DIMENSIONS 15 FT X 8.5 FT (4.6 M X 2.3 M)

FIGURE 4

0022015

STANFORD SYNCHROTRON RADIATION LABORATORY

ENGINEERING NOTE

AUTHOR	DOCUMENT	CODE	SERIAL	PAGE
R. Hettel	ANGIOGRAPHY HUTCH (BL 4-2) PPS INTERLOCK	LOCAT.	DATE 12-18-84	1 OF 7

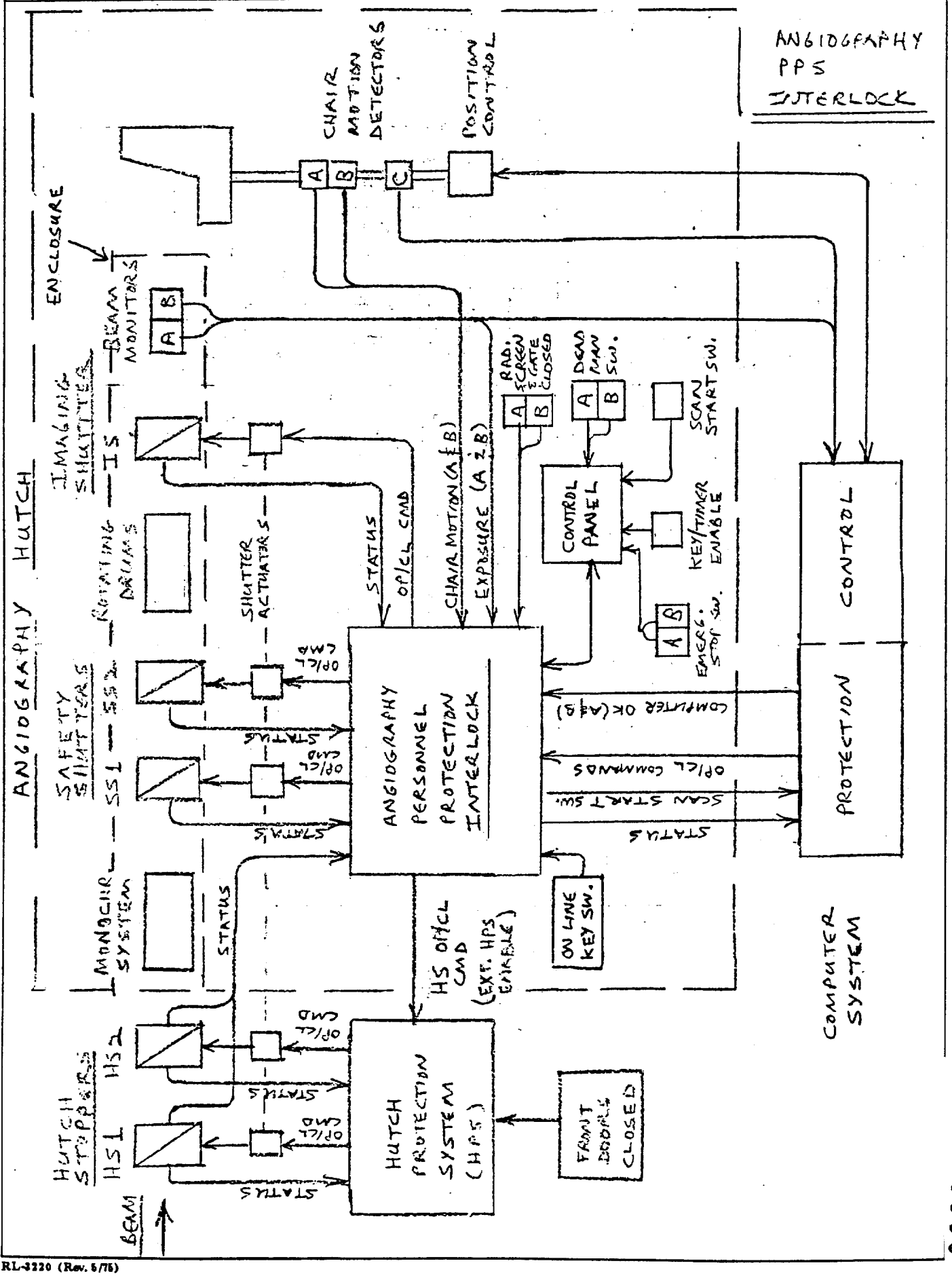

7600-54250

RL-3220 (Rev. 5/75)

0022016

FIGURE 6

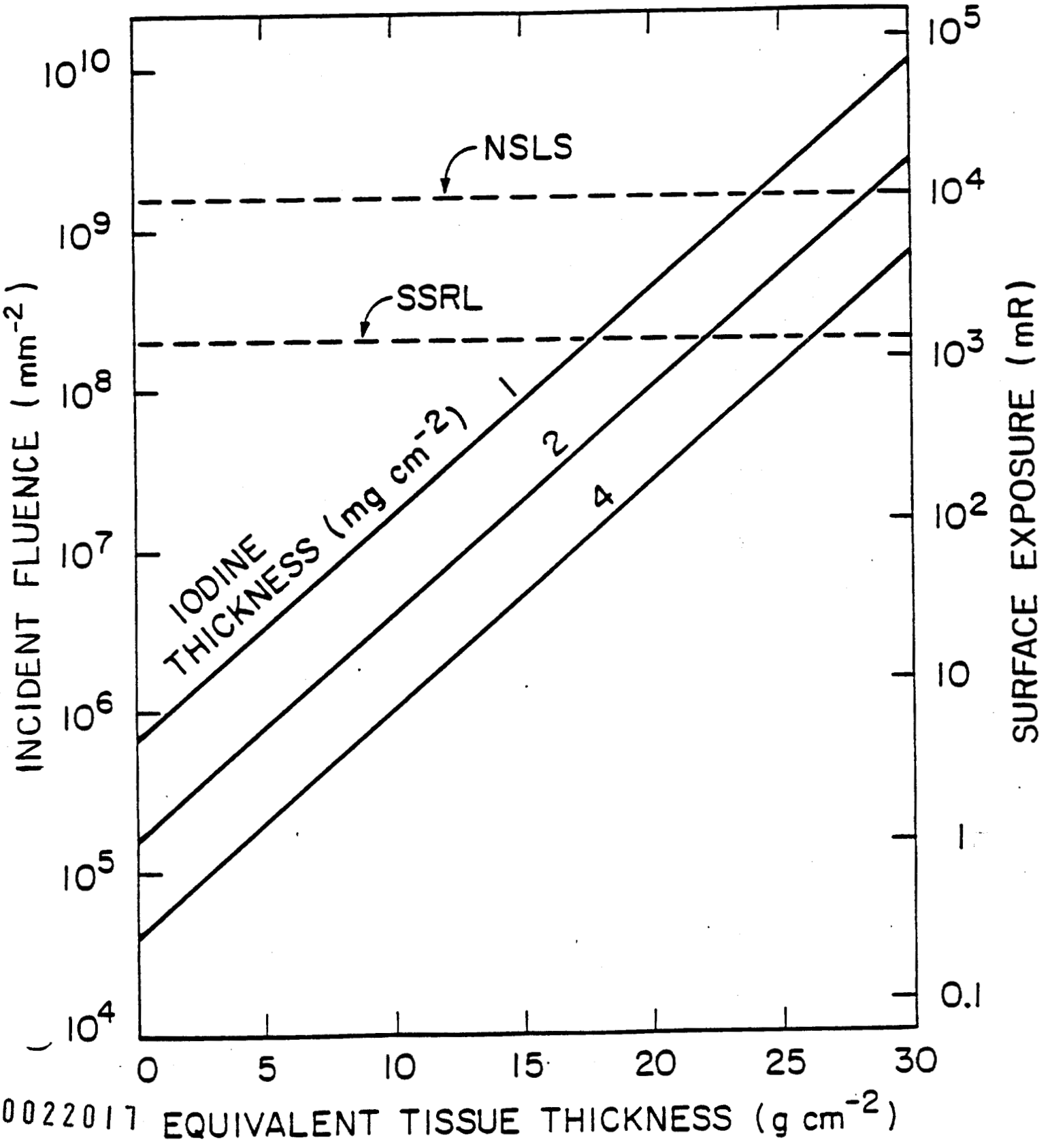
NSLS
SSRL
IODINE THICKNESS (mg cm^{-2})
1
2
4
INCIDENT FLUENCE (mm^{-2})
10^{10}
10^{9}
10^{8}
10^{7}
10^{6}
10^{5}
10^{4}
SURFACE EXPOSURE (mR)
10^{5}
10^{4}
10^{3}
10^{2}
10
1
0.1
0
5
10
15
20
25
30
EQUIVALENT TISSUE THICKNESS (g cm^{-2})

RECEIVED
NOV 09 1984
SSRL

ANGIOGRAPHY SAFETY PLAN

W. W. Hansen Laboratories of Physics
Department of Physics
and
Department of Medicine, School of Medicine
Stanford University
Stanford, California 94305

October, 1984

0022018

TABLE OF CONTENTS

page

I. INTRODUCTION.....1

II. IMAGING AND SAFETY CONTROL.....1

III. ACCESS CONTROL TO EXAMINATION ROOM.....3

IV. CONTROL OF PATIENT EXPOSURE.....4

V. FAST SHUTTERS.....6

TABLES, FIGURES AND CAPTIONS.....8

0022019

I. INTRODUCTION

The use of Beam Line IV-2 at SSRL for diagnostic X-ray medical imaging presents questions of radiation safety and control that have not previously been encountered at SSRL or SLAC. While the protection of personnel and other experimenters clearly falls within the domain of the SSRL personnel protection system, there is no precedent at SLAC to guide the division of responsibilities for control of patient X-ray exposure. It is clear, as in any radiological laboratory, that the responsible physician must determine the total X-ray exposure permissible in an imaging series. This plan describes the devices that control and monitor the X-ray exposure to the patient, and a system designed to protect both personnel and patient.

II. IMAGING AND SAFETY CONTROL

The X-ray images will be acquired in line-scan fashion, with the patient moving vertically at constant speed and the X-ray beam sweeping over the field of interest. The essential components in the imaging apparatus are indicated in Figure 1. The experimental protocol, as presently envisaged, calls for the acquisition of several images in rapid time sequence by repeating the scan motion alternately in opposite directions. To prevent X-ray exposure to the patient during the periods of deceleration and acceleration between the constant-velocity scans (as well as before and after the imaging sequence) the X-ray beam will be blocked by a fast-acting imaging shutter. This shutter is not shown in Figure 1.

During the scan sequence, the patient will be alone in the shielded examination room that confines direct and scattered radiation. However, the attending personnel must be able to enter this room immediately in response to

a possible medical emergency, even if a scan is in progress. A fast-closing safety shutter, triggered by an interlock system when such entry is begun, will extinguish the X-ray beam before these personnel can reach the radiation area. This shutter is also not shown in Figure 1.

Patient exposure to the beam will be monitored and limited by a protection computer which will act to extinguish the beam if it detects a malfunction in any of the system components. Independent monitors with hard-wired logic to close the safety shutter will be employed only where needed to detect potentially serious system failure.

The imaging sequence will be controlled by a scan-control computer but will be subject to overall supervision by the protection computer.

The scan-control computer, the protection computer, and the hard-wired logic must interface to the SSRL personnel-protection system collectively so that they can:

(1) withhold or remove the enable for opening the SSRL beam shutters.

(2) open or close the enabled beam shutters.

(3) sense whether the beam shutters are open or closed.

(4) close the safety shutter in response to the detection of a system fault.

The interaction between the scan-control computer, the safety computer, and the SSRL personnel protection system is shown in Figure 2.

III. ACCESS CONTROL TO EXAMINATION ROOM

The disposition of equipment in the examination room during an imaging sequence is indicated in Figure 3.

Standard SSRL closed-hutch operation would be psychologically stressful to the patient and would impede access of both physician and emergency equipment to the patient in the event of a medical emergency. Therefore, the doors on one side of the hutch must be left open or removed. In their place will be erected leaded glass or Plexiglas radiation screens so that the physician and patient will be able to maintain eye contact throughout the procedure. The screens will be arranged to intercept any single-scattered radiation from the hutch interior while leaving an unobstructed passageway. A "dead-man" switch will be located at the entrance to this passageway.

Interlocks will prevent opening of the SSRL beam shutters unless the room doors on the opposite side are closed and locked, and the dead-man switch is held closed. The scan system cannot open the SSRL beam shutters until the fast-closing safety shutter has been opened and armed. The fast-acting imaging shutter located downstream of the monochromator, will be used to control admission of the beam to the patient area when the SSRL beam stops are open. This shutter cannot be opened unless the dead-man switch is closed, and it will close rapidly if the dead-man switch is released. Release of the dead-man switch will also release the fast closing shutter and close the SSRL beam shutters.

During imaging operations, the physician will have the responsibility for seeing that the patient is properly positioned and the hutch is clear of other personnel. He will then stand at the room entrance, visible to the patient, holding the dead-man switch. The SSRL beam stops can then be opened. The

imaging shutter remains closed until it is opened under computer control as part of the scan sequence. If the patient requires medical attention during a scan, or if the physician observes some malfunction in the scan operation, release of the dead-man switch will extinguish the beam and abort the scan.

To prevent unauthorized operation of the system, the dead-man switch is inoperative unless it is first enabled by the operation of a key-lock switch located next to it, the key being kept by the physician. Operation of the key-lock switch starts a timed interval (about 5s) during which the dead-man switch must be closed. If the dead-man switch is not closed within this timed interval, or if it is released after being closed, it must again be enabled by use of the key-lock switch.

To facilitate necessary alignment and calibration procedures for the scanning system, it will be desirable to have the means to rapidly change to the standard closed-room, "no-bars" mode of operation, with all hardware interlocks to the fast-closing safety shutter and the fast-acting imaging shutter bypassed.

IV. CONTROL OF PATIENT EXPOSURE

The beam position will be marked by a light-beam system to aid in the proper positioning of the patient in preparation for a scan.

If the full beam intensity is not required for a scan, it will be attenuated to the appropriate level by inserting an absorber downstream of the monochromator. The beam will then pass through a calibrated ion chamber which will be used to monitor patient exposure to the beam. If the exposure exceeds a predetermined limit, the beam will be extinguished by closure of the safety

shutter. One available implementation is to convert the monitor ion-chamber output to a proportional frequency which is counted down in a preset up/down counter. If the counter reaches zero, the beam is extinguished. A beam monitor is an essential part of the scanning system. This monitor can be calibrated and used as the patient exposure monitor. However, an independent monitor will also be provided, either as the primary exposure monitor or as a backup.

The scan-control computer will have primary control over the X-ray exposure to the patient during an imaging sequence. If it detects a malfunction in the scanning system, the computer will act to extinguish the beam and to abort the scan. To guard against computer failure, the computer will be required to reset a "watchdog timer" at short intervals. The watchdog timer will close the fast shutter (by removing its "enable") if more than 10 ms elapses without a reset.

The rate of X-ray exposure from the monochromatized 33 keV beam collimated to a height of 0.5 mm is approximately 47 R s^{-1}. This assumes SPEAR operating conitions of 3 Gev, 100 mA and an 18 kg wiggler field. If the beam is focused, as planned, with a curved crystal monochromator, the exposure rate will increase by a factor of 4.8. Thus, the safety of the patient requires that the imaging shutter be closed unless the scanning chair is in motion at the correct speed. Because of the high beam intensity, a hard-wired chair-motion detector will be provided in the circuit that enables opening of the fast shutter, instead of to relying solely on software-controlled computer monitoring of the scanning-chair motion.

Table I summarizes the possible range of potential patient exposures as a function of the selectable scanning speed of the patient chair, or,

equivalently, the acquisition time for each horizontal line element in the image (summed over both X-ray energies). Cases (1) and (2) in the table refer to vertically collimated and vertically focused beams, respectively. The actual exposures allowed for a particular patient study will depend on the patient thickness and the level of iodine sensitivity required in the image. The exposure level should be in the range 0.4 - 0.8R per image frame.

Figure 4 summarizes the relationship between exposure, iodine thickness and patient thickness, and also indicates the limit set by the maximum X-ray fluence available at SSRL.

V. THE FAST SHUTTERS

An essential part of the scan system is the fast-acting imaging shutter that will be used to block the X-ray beam during the non-imaging intervals in the scan sequence. To ensure the safety of the patient and operating personnel, the fast imaging shutter will also be closed promptly if a scan system malfunction or break in the SSRL interlock is detected. To achieve the desired response time (10-20 ms) during normal scan operation, external power is required both to open and to close the fast shutter.

A separate fast-closing safety shutter will be used as a back-up for the safety function of the fast shutter. Once open and armed, the safety shutter will close rapidly (within 10-20 ms) if triggered by the breaking of the SSRL interlock or by command from the scan system, or if external power is lost.

Since the safety shutter can close rapidly only after it is armed, its control logic must prevent initiation of the relatively slow arming sequence unless the SSRL beam shutters are closed. This order of operation is further

enforced by requiring that the safety shutter be armed before the SSRL beam shutters can be commanded to open.

The fast-acting imaging shutter will be located downstream of the monochromator enclosure and may be incorporated into the housing of the energy-switching (rotating drum) mechanism associated with the monochromator. The fast-closing safety shutter may be installed within the shielded enclosure, or in an upstream monochromator housing.

0022026

TABLE CAPTIONS

1. Maximum exposure rates for collimated and focused beams as a function of the table speed.

Scan system operation and patient exposure per image frame

acquisition time		scan speed	maximum possible exposure per frame	
for one line (s)	for 300-line frame (s)	($mm \cdot s^{-1}$)	case 1 (R)	case 2 (R)
1/480	0.625	240	.098	.469
1/240	1.25	120	.195	.938
1/120	2.50	60	.391	1.88
1/60	5.0	30	.782	3.75
1/30	10.0	15	1.56	7.50

Note: Maximum achievable exposures are shown in table. Exposures of 0.4 - 0.8 R per frame are expected to be necessary for an acceptable signal-to-noise ratio in the image.

0022028

Table # I

FIGURE CAPTIONS

1. A schematic diagram of the line-scan K-edge imaging system using synchrotron radiation.

2. The logic diagram for the safety system.

3. The floor plan for the examination room.

4. A diagram showing the incident X-ray fluence requirement set by photon statistics to detect the iodine thicknesses shown with a signal-to-noise ratio equal to 5 as a function of overlying tissue thickness. A detector element area of 0.5 mm x 0.5 mm and an X-ray detection efficiency of 0.7 are assumed. Also indicated is the corresponding surface radiation exposure. The dashed horizontal lines indicate the fluences potentially available at both SSRL and NSLS, at a distance of 20 meters from the wiggler source, for a line exposure time (above and below the K-edge) of 2ms. Vertically focusing monochromators are assumed at both laboratories. Operating conditions at NSLS are assumed to be 2.5 GeV, 500 mA and a wiggler field of 60 kG.

LINE-SCAN K-EDGE IMAGING SYSTEM

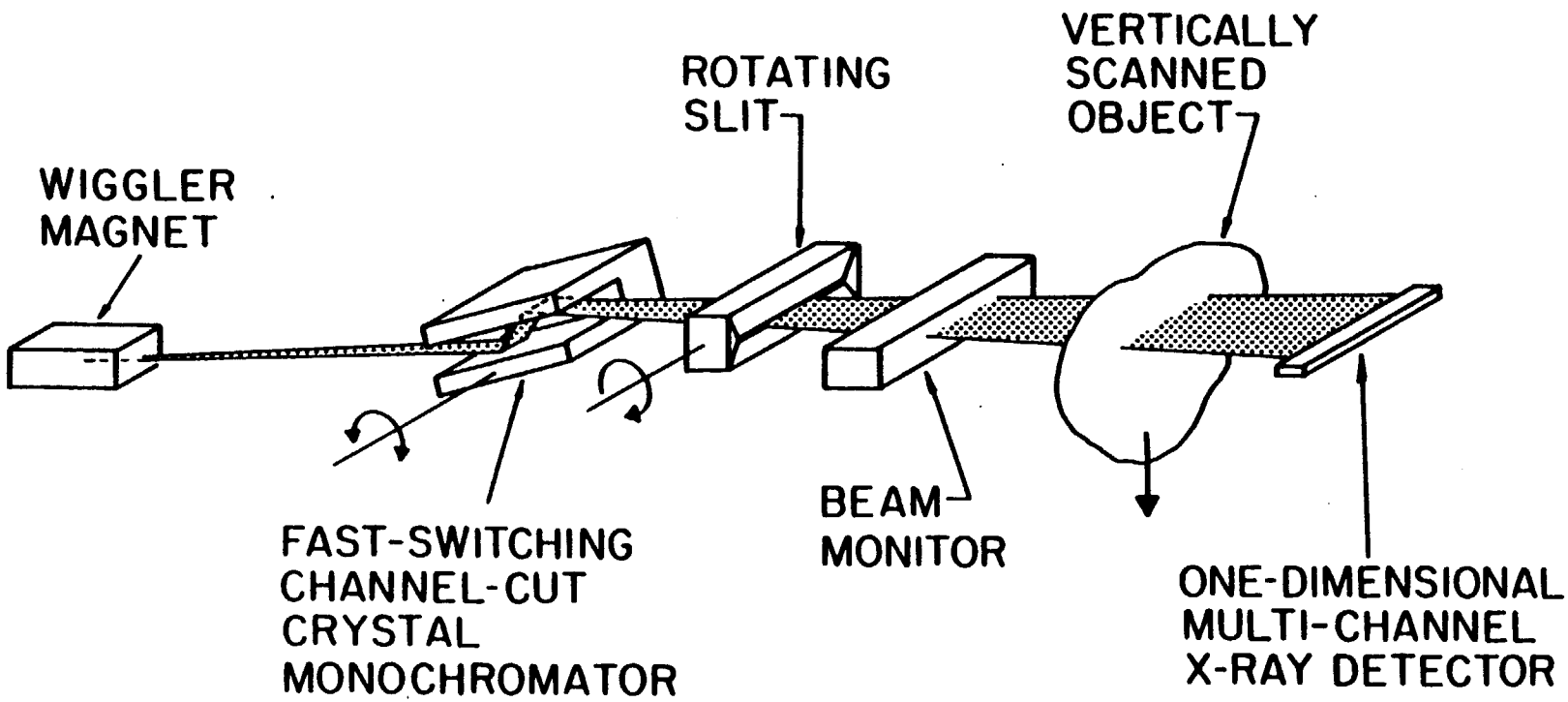

Figure 1

0022030

Figure 4

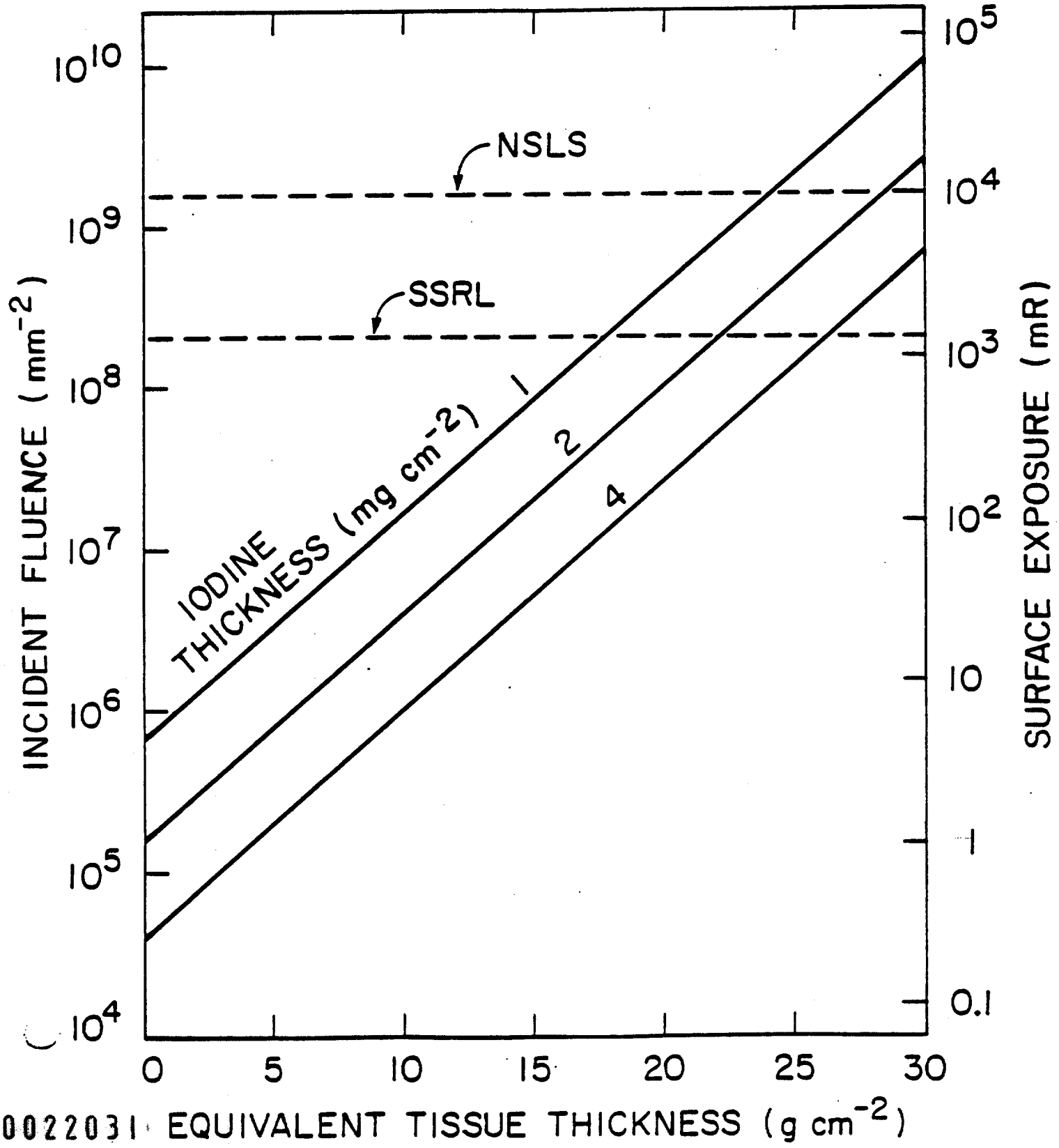

0022031

DATE: April 4, 1984

TO : Dr. Panofsky

FROM : Lloyd Sides

SUBJECT: Diagnostic X-ray Use of the Accelerator on Humans

A week or so ago, you asked me to look into the contractual and/or legal implications of the possibility that SSRL might want to use the Accelerator as an X-ray source for experimental diagnostic work relating to the human heart. While there does not appear to be any specific contract coverage bearing on this subject matter, there are several provisions of which we should be cognizant in making a judgment as to whether or not to undertake such research effort.

The University is obligated to take "reasonable" precautions to protect the safety and health of employees and the general public and to comply with all "applicable" DOE safety and health requirements and regulations of which we are notified by DOE in writing. (Art. XXXV, p.65; Art. XL, p.68). To my knowledge, we have not been notified in writing by DOE of any applicable safety and health requirements or regulations pertaining to research work involving human subjects.

The University is also obligated to keep DOE "informed" of "significant" matters as far in advance as possible (Art. II(c)(4), p.8), must furnish cost estimates for particular features of the work, and cannot proceed with particular work without prior written approval of DOE, if such work is in excess of the latest DOE approved estimate. Also, fabrication of new equipment or substantial alteration of previously authorized equipment if its purpose is either modified or operating characteristics are substantially changed requires advance DOE "notification", and prior contracting officer approval if it involves more than $500,000.00. (Art. II(c)(10), p.9).

I shouldn't think that any of these contract provisions would cause us any difficulty particularly at the present stage of this matter.

Further, I am unaware of any specific Federal laws or regulations which would be applicable other than the DOE regulations for Protection of Human Subjects with respect to assurances as set forth in 10 Code of Federal Regulations, Part 745. (See attached). These are quite general and rely largely on the protocol established by the Federal Department of Health and Human Services. As a general matter, these regulations pretty much place the burden on the research institution through its Institutional Panel on Human Subjects in Medical Research, to set its own standards and provide certain assurances regarding procedures and safety measures to the funding Federal Agency. I should note that my source in DOE Hq., Dr. Susan Rose, Office of Human Health and Assessments, advises me that all this might change at some future time but as of now, this is it.

One further item should be noted also and that is that the State of California does have two statutory sections of the Health and Safety Codes which establish standards for education, training, and experience, including licensing and certification, and otherwise regulate Radiologic Technology (under which diagnostic X-ray techniques on humans explicitly fall) and Radiation Control (CA. Health & Safety Codes, Chapter 7.4 and 7.6 respectively). Although ordinarily State law such as this would not necessarily apply to research work conducted in a federal laboratory, the political climate and public relations sensitivity being what it is today, it might well be both practical and prudent to adapt to some of the State rules even though technically they might not be directly applicable, e.g. the requirement for the X-rays to be administered under the supervision of a certificated medical doctor. In as much as I'm sure the University Medical Center is thoroughly familiar with and complies with these State procedures as a matter of routine, this shouldn't be a problem for us either.

I hope this is sufficiently responsive to your concerns, but please let me know if you have any further questions.

LWS/gpc

attachment: 10 CFR

DATE: March 21, 1984

TO : Files

FROM : W. Panofsky WHP

Cerino — Let's Discuss AB

SUBJECT: Human Subjects at SSRL

Dick McCall told me that SSRL was intending to do experiments on humans using the machine as an X-ray source to produce images of the heart on a dynamic basis. Animal experiments had been conducted previously. The idea is to take images using two wave lengths on the two sides of a K-edge of an element injected into the bloodstream. Barry Hughes of HEPL will monitor the physics aspects of the experiment.

I told McCall that I would assume that the Panel on Human Subjects in Medical Research of the University would have certified this project. In addition, I would not wish to give permission to go forward until Health Physics had made a thorough examination of possible accident modes and dosimetry.

I phoned Lloyd Sides to check whether exposure of human subjects in any way involves obligations we may have under our contract or in other respects with reference to law or government regulations.

cc: Directors
R. McCall
L. Sides
A. Bienenstock

0022034

STANFORD UNIVERSITY • OFFICE MEMORANDUM • STANFORD UNIVERSITY • OFFICE MEMORANDUM • STANFORD UNIVERSITY • OFFICE MEMORANDUM

(27)

DATE: June 28, 1983

TO : Barrie Hughes

FROM : Herman Winick

SUBJECT: Use of Human Subjects in Angiography Work at SSRL

Dear Barrie,

With the go-ahead from Art to proceed with widening of the beam line we can now look forward to the use of human subjects at SSRL. As you know, this will be the first time human subjects will be in an x-ray beam at SSRL. We have discussed this matter with you before and suggested that you begin to secure the necessary approvals of use of human subjects from the relevant university, medical school and SLAC committees.

You and the medical members of your group are probably quite familiar with the university and medical school committees. The SLAC Radiation Committee is headed by Dr. Adam Boyarski. Since this Committee has never had such a request before, I urge you to contact Dr. Boyarski as soon as possible. He can be reached at SLAC on extension 2703.

Best regards.

Sincerely yours,

Herman Winick

HW/j
cc: Adam Boyarski
G. Brown

0022035

STANFORD UNIVERSITY • OFFICE MEMORANDUM • STANFORD UNIVERSITY • OFFICE MEMORANDUM • STANFORD UNIVERSITY • OFFICE MEMORANDUM

DATE: September 17, 1982

TO : A. Bienenstock, G. Brown, J. Cerino, R. Gould, K. Hodgson & I.Lindau

FROM : Herman Winick HW

SUBJECT: Reconfiguration of Beam Line IV to Enable Wide Beam Angiography Studies

I have been pursuing my suggestion (originally made one year ago) of reconfiguring Beam Line IV to deliver a wide beam (12 to 15 cm). R. Boyce resurrected his notes on the subject from last year and worked on it some more with J. Cerino and me. We have come to the following conclusions:

a) The line can be reconfigured downstream of the transverse wall to permit a 13 cm wide unfocussed central beam at 28m as well as the present focussed beam. This appears to be adequate for the immediate angiography needs, although they would prefer 15 cm to match the sensitive width of the new Si detector now in construction.

b) To permit passage of the 13 cm wide beam and still maintain the side stations, the side stations need to move from their present location at about 5.5 mrad to about 7 mrad. This makes the spectrum softer in the side stations. However at 3 GeV and with 18 kG in the wiggler the critical energy at 7 mrad is still quite high (about 7 keV). So the main impact on the side stations would be felt at lower wiggler field. In particular, if the end station user was troubled by harmonics and wanted to lower the wiggler, the side stations would run out of flux sooner. In the present 5.5 mrad location at 3 GeV we can get good beam into the side stations with the wiggler as low as about 11 kG. The lowest wiggler field that would still provide useful beam to the side stations at 7 mrad would be about 14 kG. The geometrical arrangment of the side station monochromator and hutch remain the same so that users will sense no change except in the spectral hardness at reduced wiggler fields.

c) The new hardware for the reconfigured beam line would cost about $70 K and about 25 man-weeks of labor would be required for assembly, test, bake and installation. Both these numbers are rough estimates. Much of the labor must be supplied by SSRL staff but some could come from outside (e.g. job shoppers).

d) About 4 months are required to design, build and test the new hardware and about one month for installation. Thus it is possible (given enough priority and resources) to install the reconfigured line during the planned Feb. 1983 shutdown.

0022036

On 9/14/82 I met with Barrie Hughes to inform him of the above and to explore with him the interest and capablilities of the angiography group to implement this beam line. I learned the following from him: The angiography group would be very interested to use such a reconfigured beam line but, at present, have no resources to put in. They are not optimistic about getting substantial NIH funding soon. If the beam were reconfigured, they would want about 25% of the dedicated beam time for a minimum of two years to pursue their program at a reasonable pace. They have to do much work to make use of the new wide beam. This includes a new monochromator, detector, electronics, hutch and patient table and other items. However it appears very likely that, given sufficient funding, all of this could be accomplished on the same time scale as the reconfiguration of the beam. At present they have sufficient funds only for the detector completion.

Thus, it appears that the main hurdles to be overcome are:

a) funding (NIH, Kaiser, Stanford University, other)

b) SSRL agreement to assign manpower resources to design and build the line

c) an SSRL commitment of sufficient beam time to the angiography group on this station.

If the commitment could be made by SSRL I imagine that this would be instrumental in aiding the angiography group to obtain the needed funds. We should not underestimate the impact of such a commitment on our User community. The wiggler beam lines are the most in demand at SSRL with requests on the end stations running up to 7 times the available time. We must also carefully consider the impact of this new work on the SSRL staff at a time when we have heavy commitments to other construction projects.

It seems to me that the Stanford angiography program is at a critical juncture. A wide beam is essential for further progress. Developing a completely new beam line for this work is expensive and time consuming. Also the prospects for obtaining enough funds to build a completely new line appear poor. Reconfiguring Beam Line IV is cheaper and quicker, but it has a negative impact on other SSRL Users.

If SSRL does not provide a wide beam soon, I imagine the efforts here will wind down and similar programs will start at other synchrotron radiation laboratories, several of which will have suitable wide beams within about a year or so. The excellent progress made by the group to date and the suitability of our present wigglers (with a reconfigured line they will provide intensities equal to or better than that which will be available at other labs for the next several years) argue strongly for us to make every effort to provide the needed wide beam.

cc: R. Hofstadter
E.B. Hughes
E. Rubenstein

0022037

MEDICAL WIGGLER LINE
ON BL IV

9. 9. 82
R. Boyce

ASSUMPTIONS –

a) PATIENT LOCATED AT 28 M FROM SOURCE
b) 13.0 cm BEAM WIDTH REQUIRED
c) 13.0 cm CENTERED ON BL IV ℄
d) BOTH SIDE STATIONS MOVE OUTWARD AND ACCEPT 1.2 mR BEAM

WITH ABOVE PARAMETERS THE SIDE STATIONS MUST MOVE OUTWARD TO 7.0 mR ℄ TO ℄ (SIDE STATION ℄ TO BEAM ℄). ALL COMPONENTS CAN REMAIN THE SAME ON BOTH SIDE STATIONS. THE CLEARANCE FROM SIDE STATION ℄ TO INSIDE WALL OF HUTCH WILL BE EQUAL TO CURRENT DIMENSIONS (~ 55 mm).

THE ATTACHED COST ESTIMATE SHOULD BE BUMPED FOR INFLATION.

H. WINICK
R. GOULD
J. CERINO
G. BROWN

0022038

MEDICAL WIGGLER LINE ESTIMATE

R. Boyce
10.5.81

THE FOLLOWING IS AN ESTIMATE FOR RE-BUILDING BL IV TO ALLOW 6 mR UNFOCUSSED TO THE CENTRAL LINE. THIS MEANS MOVING BOTH IV-1 & IV-3 FROM 5.6 mR & TO 7 OR 7.5 mR CENTER LINE. THIS ALSO ALLOWS a 6 mR FOCUSSED IN THE CENTRAL LINE.

THIS ESTIMATE DOES NOT INCLUDE A MONOCHROMATOR OR HUTCH FOR THE CENTRAL LINE.

PLEASE GIVE ANY COMMENTS OR ADDITIONS TO ME

THANKS RICHARD BOYCE

CC WINICK
GOULD
CERINO
HOWEF
BROWN

0022039

MEDICAL WIGGLER LINE

R. Boyce 10-2-81

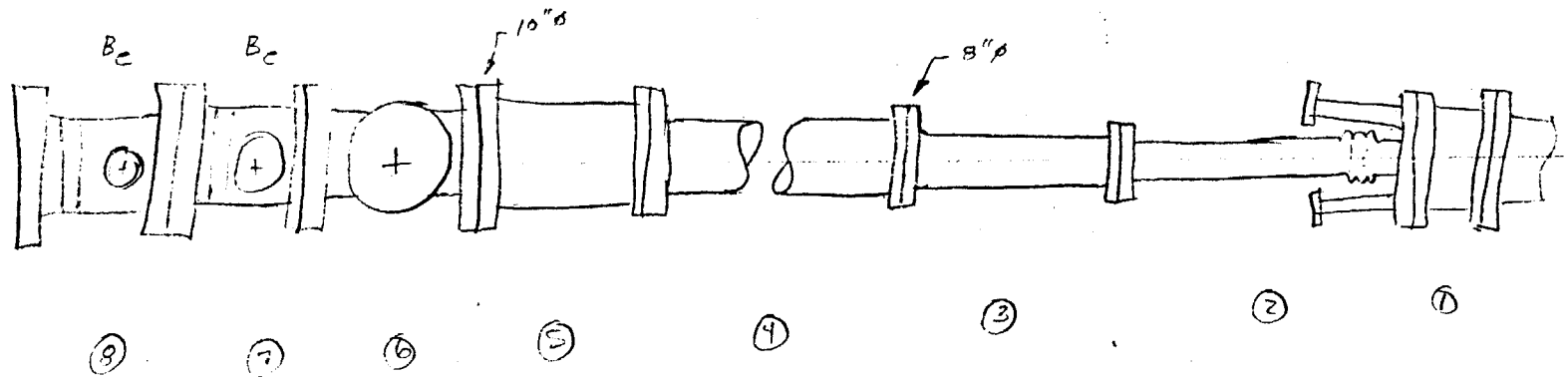

1. FIXED MASK
2. SEPARATION CHAMBER
3. SPOOL, 4.5 ø
4. SPOOL, 6.0 ø
5. SPOOL, 8.0 ø
6. CROSS, 10" FLANGE
   a) 110 L/S PUMP
   b) GRAPHITE FILTER
   c) IG
* 7. Be .010
* 8. Cr .010"
   a) 60 L/sec
   b) IG
   c) VALVE
   d) RC

9. SUPPORT, SPRING MOUNTED
10. SUPPORT, Be WINDOW UNIT
11. SUPPORT, BEAM PIPE
12. SHIELDING REWORK
13. ALIGNMENT
    A. STEERING
    B. CENTRAL LINE
    C. SIDE STATION
15. 1 MIL Be UNIT

* BL I & II SPARE HAS FOLLOWING DIMS: EE & FF

.20" x 5.25" .010" Be

85 PPM / Fe

0022040

BURDENED SLAC COSTS - COMPLETE
MATL:, MACHINING, CLEANING, WELDING

MEDICAL WIGGLER LINE
R. BOYCE 10.5.81

DOES NOT INCLUDE SSRL ASSEMBLY, T & B OR DESIGN

Pg 1 OF 2

REPRESENTS '81 ESTIMATE

			$
1.	FIXED MASK (1 EA)		3,000.00
2.	SEPARATION FLANGE (1 EA)		3500.00
3.	DRIFT TUBE #1 (4" OD TUBE)		800.00
4.	" " #2 (6" OD TUBE)		1000.00
5.	" " #3 (8" OD TUBE)		1200.00
6.	10" FLANGE STD CROSS		1700.00
7.	110 L/SEC ION PUMP W/CABLE		3600.00
8.	PUMP POWER SUPPLY		2000.00
9.	ION GAUGE W/ CABLE & FULL NIPPLE & CONTROLLER		1200.00
10.	GRAPHITE FILTER (COOLED)		3000.00
11.	B_e WINDOW (3 EA)		15,000.00
12.	B_e HARDWARE:		
	60 L/SEC ION PUMP W/CABLE & POWER SUPPLY	4200.00	
	I G W/ CABLE & CONTROLLER	1200.00	Argon
	RIGHT ANGLE VALVE	600.00	2000.
	FAST SPHICOF	800.00	6800.00
13.	SUPPORT STRUCTURE, DRIFT TUBE (3 EA)		700.00
14.	SUPPORT, B_e UNIT (1 EA)		500.00
15.	SUPPORT, DRIFT TUBE END (1 EA)		300.00
16.	1 MIL B_e WINDOW UNIT		1500.00
			$ 45,800.00

0022041

MEDICAL WIGGLER LINE
R. Boyce 10-5-81
Pg 2 OF 2

REWORK TO WIGGLER LINE IV
SSRL LABOR

1.	LABOR TO REMOVE SHIELD TUNNEL	MECH TECH (M T)	3 MAN WKS
2.	LABOR TO REMOVE COMPONENTS CENTRAL LINE AND BOTH SIDE LINES	(VAC TECH & MECH) (V.T. & M.T.)	3 M. WKS
3.	MODIFICATIONS TO MONO SHIELD BOX CENTRAL LINE	(M.T.)	1 M WK
4.	MODIFICATIONS TO SIDE HUTCH & MONO SHIELDING BOX	(M.T.)	2 M WK
5.	INSTALL NEW SUPPORTS	(M.T.)	1.5 M WK
6.	INSTALL NEW VACUUM COMPONENTS & SIDE & STEERING LINES	(M.T & VT)	5 M. WKS
7.	ALIGN - CENTRAL LINE, SIDE STATION, STEERING LINE	SLAC ALIGNMENT CREW	$3000.00 (8 M dn)
8.	COMPLETE SHIELD TUNNEL	(M.T)	2 M WK
9.	ELECTRICAL REWORK	ELECTRONIC TECH (E.T.)	2 M WK
10.	HELIUM & LOW CONNECTIONS	(M.T.)	2 M WK

21.5 M WKS
+ $3000.00

MISC MATERIAL & HARDWARE COSTS 3000.00

$6000.00 + 21.5 M WKS
45800.
51,800 + 21.5 M WKS

0022042

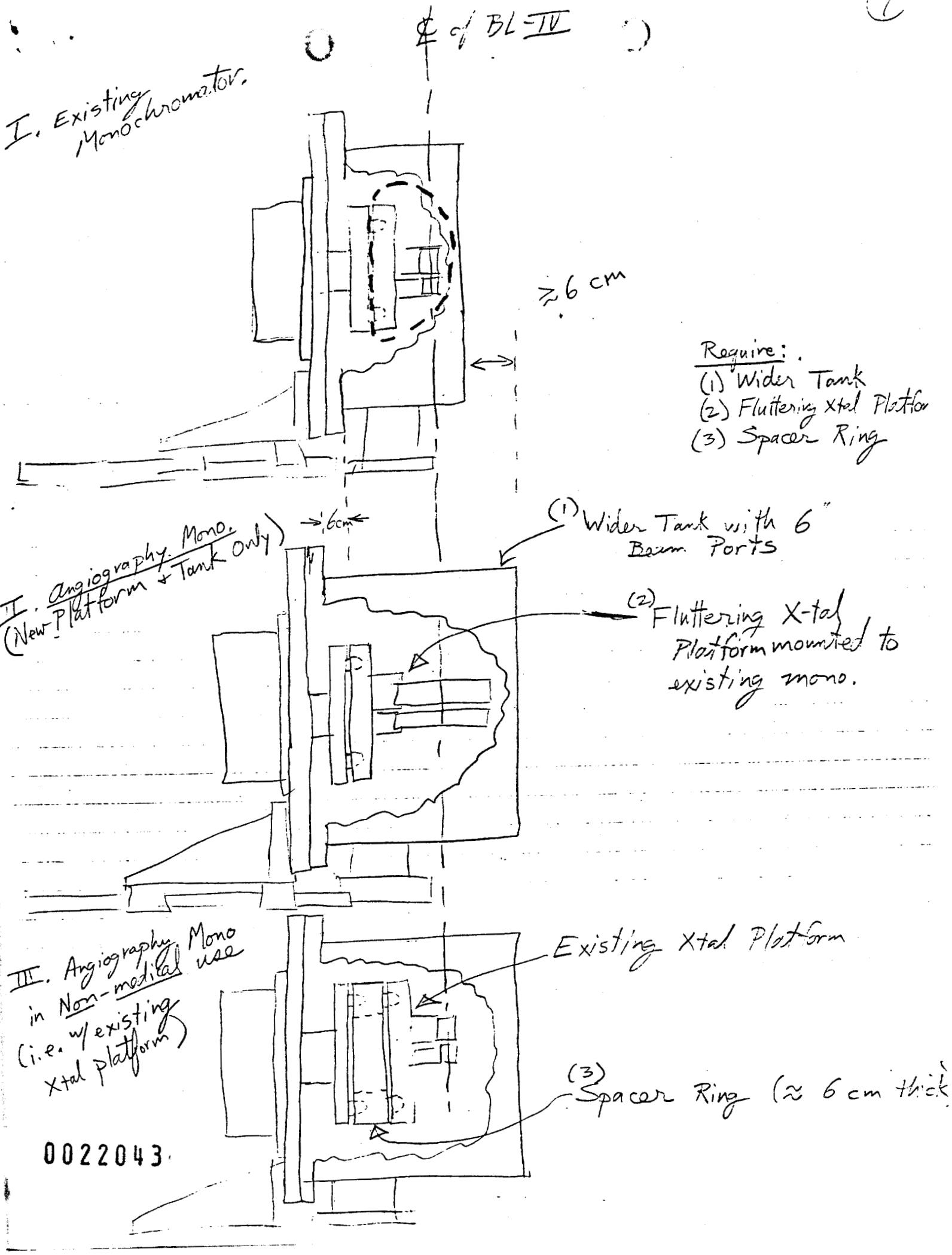
℄ of BL-IV
I. Existing Monochromator.
≳6 cm
Require:
(1) Wider Tank
(2) Fluttering Xtal Platform
(3) Spacer Ring
II. Angiography Mono. (New Platform + Tank Only)
6cm
(1) Wider Tank with 6" Beam Ports
(2) Fluttering X-tal Platform mounted to existing mono.
III. Angiography Mono in Non-medical use (i.e. w/ existing Xtal platform)
Existing Xtal Platform
(3) Spacer Ring (≈ 6 cm thick
0022043

Ke

October 20, 1981

To: E. B. Hughes

From: J. A. Cerino and W. Warburton

Subject: Angiography Beam

Several of us have briefly kicked around the following idea for an angiography beam taken from Beam Line IV (or other wiggler beam). See Figure 1.

A Si(111) crystal could be located at about 8.5 m from the beam origin point. At 0.37 A it would have a 2 Θ deflection angle of 6.8°. A beam diffracted upward at that angle can be readily extracted from the main beam line transport system via a Be window and brought to the second floor level 20-25 m downstream. Such a transport system would only conflict in minor ways with the existing hardware on one of our wiggler lines. This means that such a beam derived from Beam Line IV could do exposures in the present VAX room. On Beam Line VII a small room added to Building 120 could be used.

The bandwidth of such a crystal will be approximately 110 eV at E_o = 33 keV. We believe this is adequate to the needs for iodine dichromography.

Such a crystal is dispersive in energy vs. vertical angle; hence one could, by masking the reflected beam select a particular wavelength within the band of reflected light.

A second pair of crystals would reflect the two masked beams (one above E_o, one below E_o) making them coincide at the plane of the subject. By rapidly moving a shutter to select alternate beams one could perform the exposure without moving crystals at all. One should consider the possibility of demagnifying the beams by asymetrically cutting the second pair of crystals. Sophia Rek, of our staff, has expressed a willingness to give advice about suitable crystals and the possiblity of focusing the beam in the vertical.

I believe such a scheme would be less costly in dollars and less interfering with other users of our beam lines than the earlier proposal that is being considered. Please give it your consideration and feel free to discuss it further with our staff.

Enclosures (4)

cc: A. Bienenstock
R. Boyce
G. Brown
K. Hodgson
S. Rek
H. Winick

0022044

Fig. 1

A Schematic View of A Dichromography B.L.

10-15-81

J.A.C./W.W.

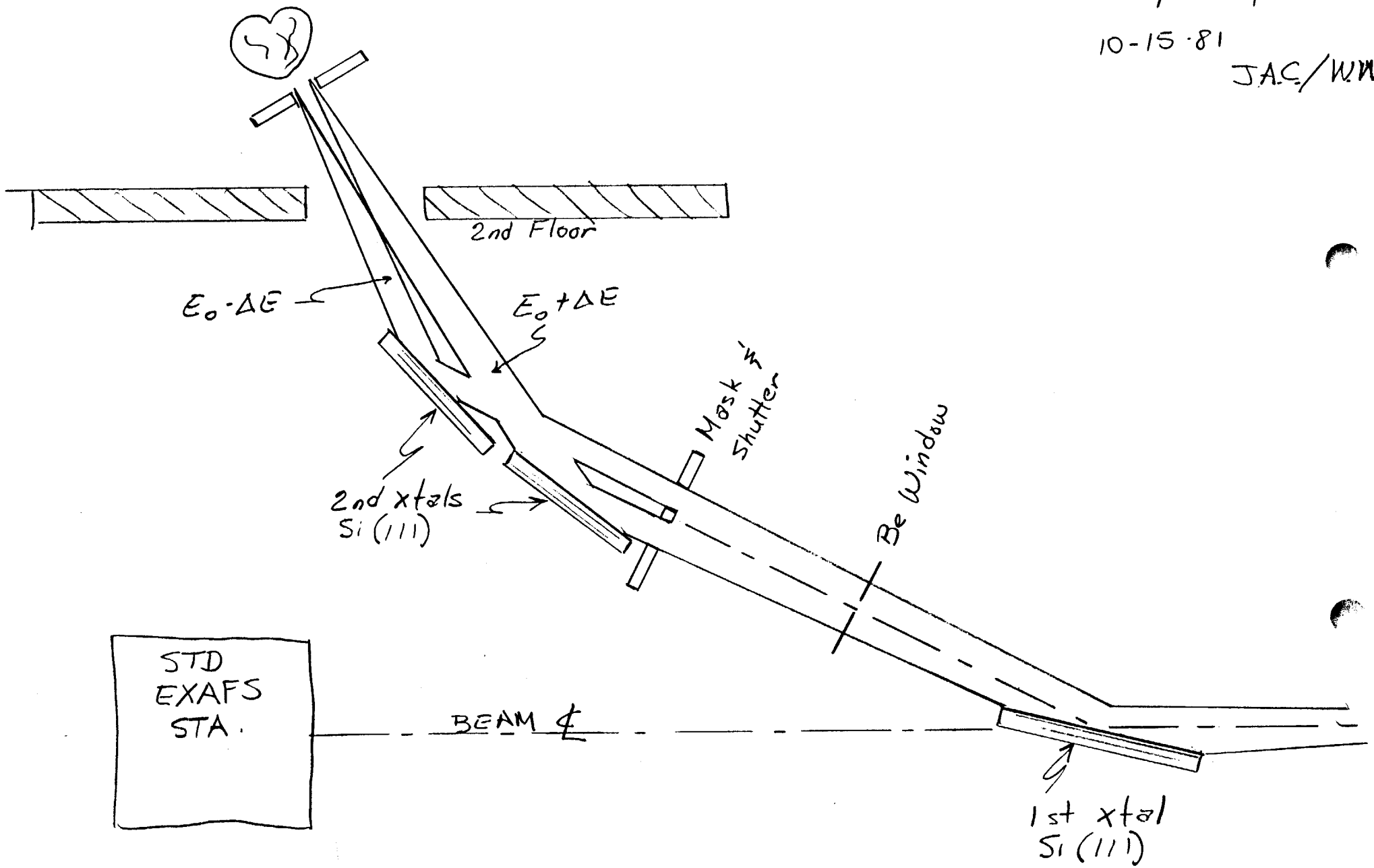

0022045

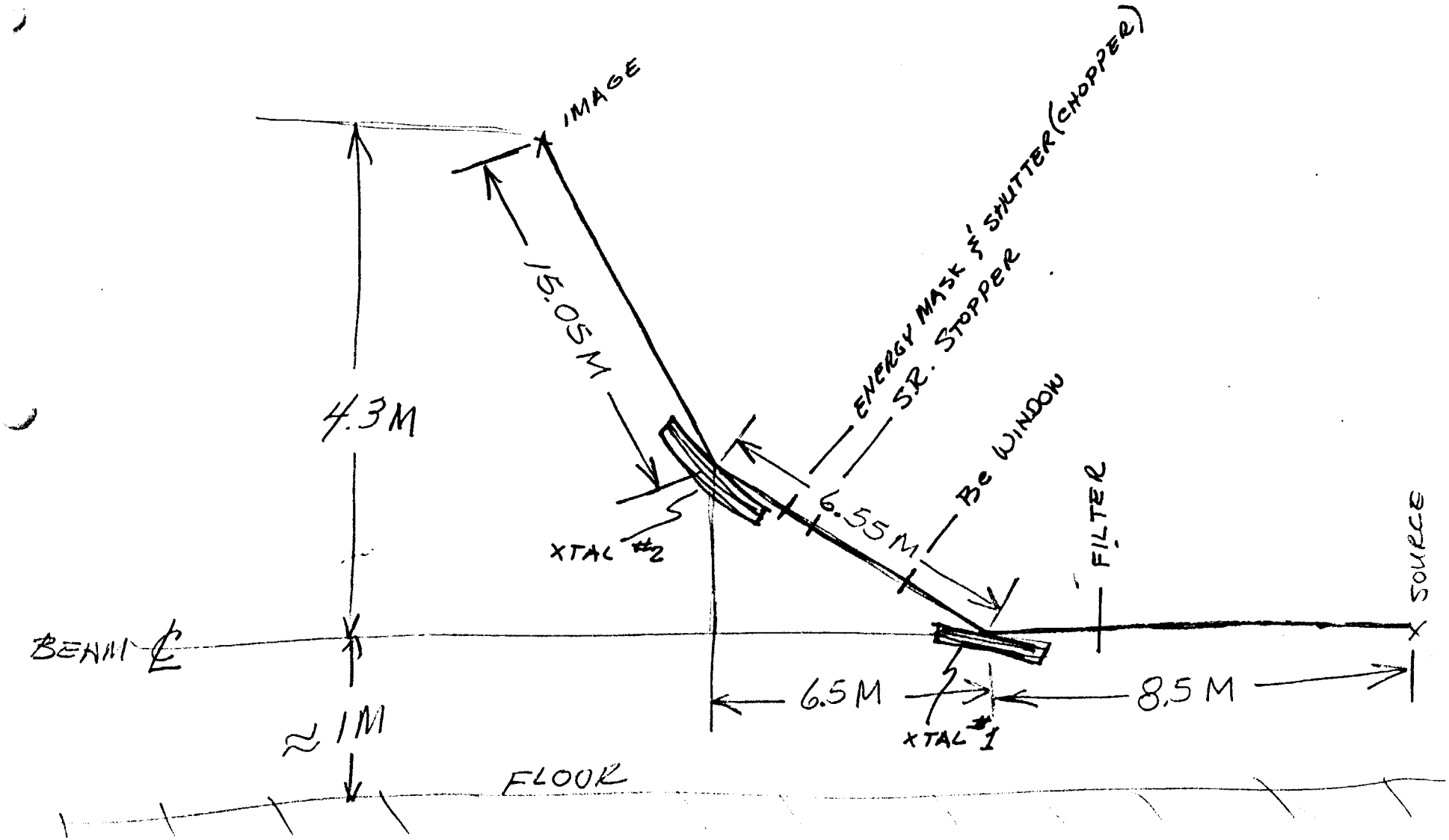
IMAGE
15.05 M
4.3 M
ENERGY MASK & SHUTTER (CHOPPER)
S.R. STOPPER
BE WINDOW
6.55 M
XTAL #2
FILTER
SOURCE
BEAM ℄
6.5 M
8.5 M
XTAL #1
≈ 1 M
FLOOR

0022046

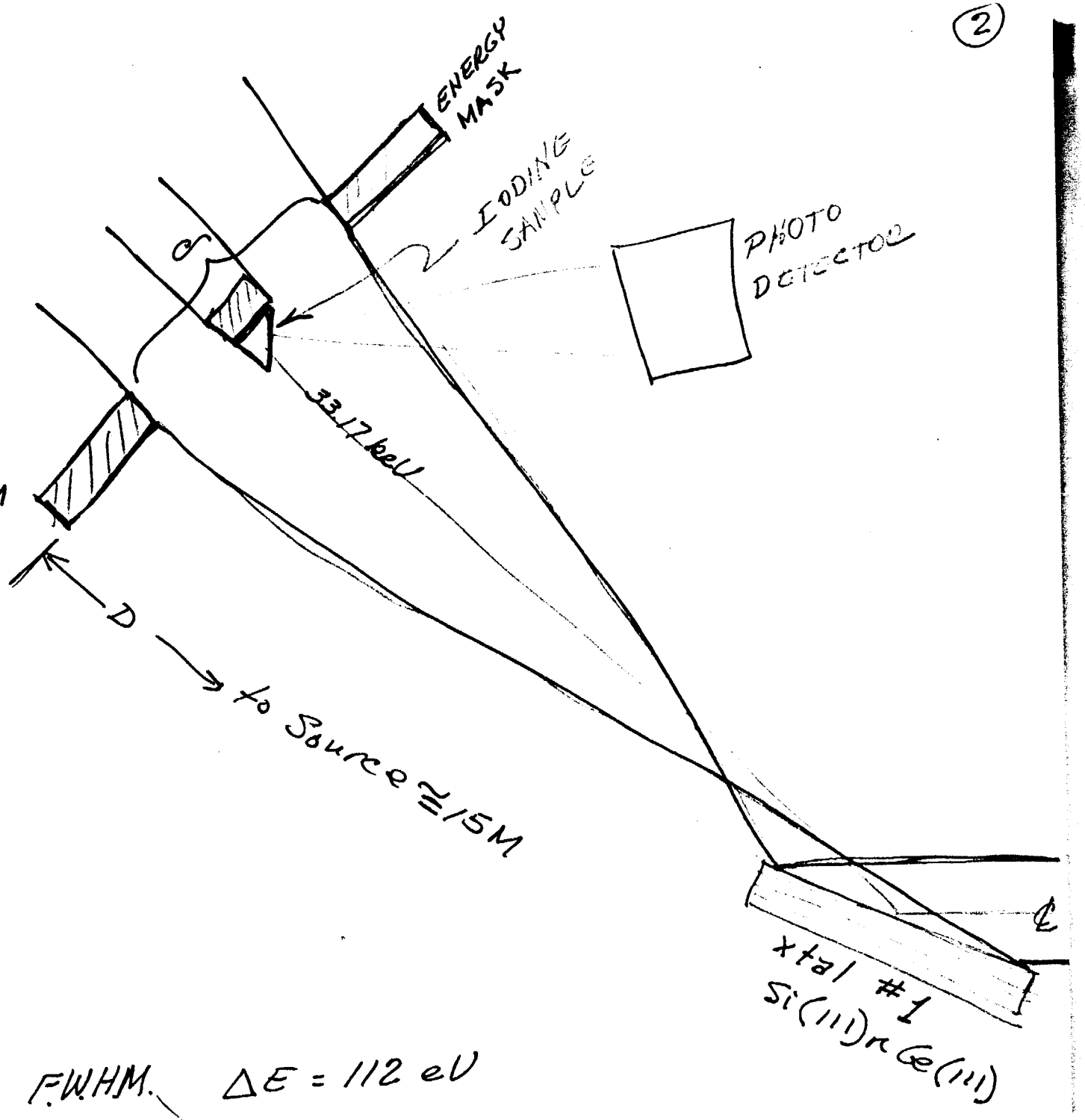

$\Delta E / \Delta \delta = 37\,eV/mm$ @15M

$D = 15\,M$

$\delta = 2 \times 10^{-4}\,RAD\,(D)$

$\delta = 3\,mm.$

$\Delta E = E_0 \cot\theta\, \Delta\theta$

$\Delta\theta \cong .2$ mrad F.W.H.M. $\Delta E = 112\,eV$

0022047

0022048