MOUND DECLASSIFICATION REVIEW
1ST REVIEW-DATE: 9/23/98
AUTHORITY: ADC
NAME: Henderson
2ND REVIEW-DATE: 1/18/99
AUTHORITY: ADC
NAME: Matay
DETERMINATION (CIRCLE NUMBER(S))
1. CLASSIFICATION RETAINED
2. CLASSIFICATION CHANGED TO:
3. CONTAINS NO DOE CLASSIFIED INFO
4. COORDINATE WITH:
5. CLASSIFICATION CANCELLED
6. CLASSIFIED INFO BRACKETED
7. OTHER (SPECIFY):

THIS DOCUMENT CONSIST OF 1 PAGES
THIS IS COPY 4 OF 5A

DATE 4/5 INIT. 12/17/63

SECRET

MOUND LABORATORY-MONSANTO
Central File No. 63-12-255

ALMD63122551249

GAS PREPARATION PIPING DIAGRAM

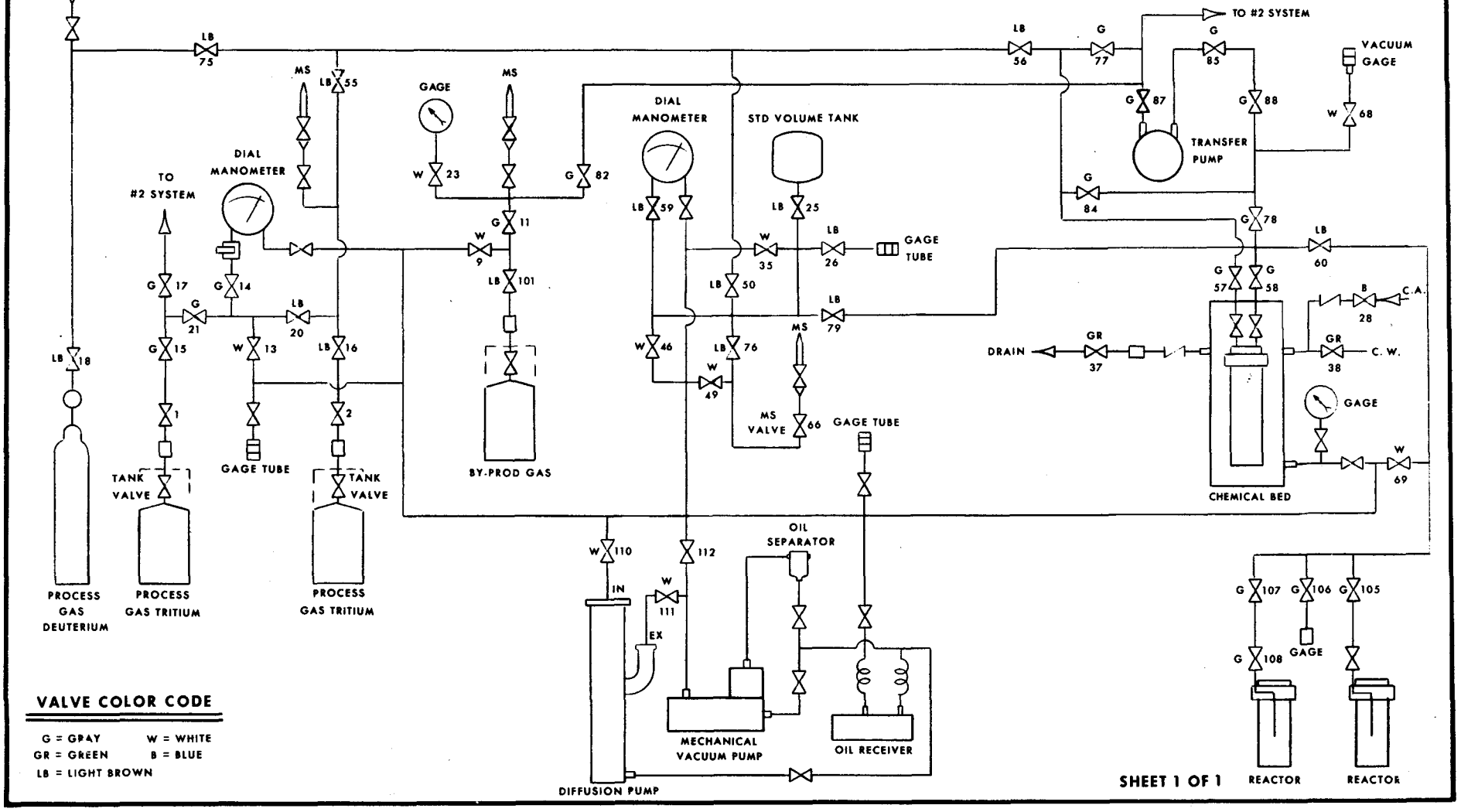

DISTRIBUTION:
cy. 1A - W. B. Creamer
cy. 2A - F. J. Dunn
cy. 3A - J. A. Grasso
cy. 4A - D. A. Kremer
cy. 5A - T. J. McGraw

GROUP 1
Excluded from automatic downgrading and declassification

SECRET
RESTRICTED DATA
This document contains restricted data as defined in the Atomic Energy Act of 1954. Its transmittal or the disclosure of its contents in any manner to an unauthorized person is prohibited.