Copy No. 60

RECORD COPY
Do Not Remove From Library

MLM-CF-59-1-54

NUCLEAR BATTERY-THERMOCOUPLE TYPE
EIGHTH QUARTERLY PROGRESS REPORT
OCTOBER 1, 1958 TO DECEMBER 31, 1958

B. C. Blanke

ALMD59015400962

U. S. Army Signal Corps Contract No. R-65-8-99811-SC-01-91

U. S. Department of the Army Project No. 3-99-15-102

U. S. Army Signal Research and Development Laboratories, Ft. Monmouth, N.J.

Released through the
MOUND LSDR PROJECT
(funded through DOE's OPENNESS INITIATIVE)
Record Copy held at Mound Facility

Mound Laboratory
Miamisburg, Ohio **Operated By**
Monsanto Chemical Company
Research and Engineering Division

UNITED STATES ATOMIC ENERGY COMMISSION
CONTRACT NUMBER AT-33-1-GEN-53

AD _____ Accession No _____

Mound Laboratory Monsanto Chemical Company
Miamisburg Ohio
NUCLEAR BATTERY THERMOCOUPLE TYPE
8th QUARTERLY REPORT B C Blanke
MLM-CF 59 1 54 31 Dec 1958 30 p 11 illus
Signal Corps Contract No R 65 8 99811 SC 01 91
U S D.A Project No 3 99 15 102
Unclassified Report

A demonstration battery containing an 880 curie polonium 210 heat source has been constructed and tested The battery initially had an open circuit voltage of 23 6 volts a maximum output of 161 milliwatts and an overall efficiency of 0 57 per cent

Details for the construction of the battery generator are given

UNCLASSIFIED

Nuclear batteries
Design
Construction

Batteries

Isotopes (Radioactive)
Applications

Signal Corps Contract No
R 65 8 99811 SC 01 91

B C Blanke

AD _____ Accession No _____

Mound Laboratory Monsanto Chemical Company
Miamisburg Ohio
NUCLEAR BATTERY THERMOCOUPLE TYPE
8th QUARTERLY REPORT B C Blanke
MLM CF 59 1 54 31 Dec 1958 30 p 11 illus
Signal Corps Contract No R 65 8 99811 SC 01 91
U S D A Project No 3 99 15 102
Unclassified Report

A demonstration battery containing an 880-curie polonium 210 heat source has been constructed and tested The battery initially had an open circuit voltage of 23 6 volts a maximum output of 161 milliwatts and an overall efficiency of 0 57 per cent

Details for the construction of the battery generator are given

UNCLASSIFIED

Nuclear batteries
Design
Construction

Batteries

Isotopes (Radioactive)
Applications

Signal Corps Contract No
R 65 8 99811-SC 01 91

B C Blanke

AD _____ Accession No _____

Mound Laboratory Monsanto Chemical Company
Miamisburg Ohio
NUCLEAR BATTERY THERMOCOUPLE TYPE
8th QUARTERLY REPORT B C Blanke
MLM-CF 59-1 54 31 Dec 1958 30 p 11 illus
Signal Corps Contract No R 65 8 99811 SC 01 91
U S D A Project No 3 99 15 102
Unclassified Report

A demonstration battery containing an 880 curie polonium 210 heat source has been constructed and tested The battery initially had an open circuit voltage of 23 6 volts a maximum output of 161 milliwatts and an overall efficiency of 0 57 per cent

Details for the construction of the battery generator are given

UNCLASSIFIED

Nuclear batteries
Design
Construction

Batteries

Isotopes Radioactive
Applications

Signal Corps Contract No
R 65 8 99811 SC 01 91

B C Blanke

AD _____ Accession No _____

Mound Laboratory Monsanto Chemical Company
Miamisburg Ohio
NUCLEAR BATTERY THERMOCOUPLE TYPE
8th QUARTERLY REPORT B C Blanke
MLM CF 59 1 54 31 Dec 1958 30 p 11 illus
Signal Corps Contract No R 65 8 99811 SC 01 91
U S D A Project No 3 99 15 102
Unclassified Report

A demonstration battery containing an 880 curie polonium 210 heat source has been constructed and tested The battery initially had an open circuit voltage of 23 6 volts a maximum output of 161 milliwatts and an overall efficiency of 0 57 per cent

Details for the construction of the battery generator are given

UNCLASSIFIED

Nuclear batteries
Design
Construction

Batteries

Isotopes (Radioactive)
Applications

Signal Corps Contract No
R 65 8 99811 SC 01 91

B C Blanke

AD _____ Accession No. _____

Mound Laboratory, Monsanto Chemical Company, Miamisburg, Ohio
NUCLEAR BATTERY - THERMOCOUPLE TYPE
8th QUARTERLY REPORT - B. C. Blanke
MLM-CF-59-1-54, 31 Dec. 1958, 30 p., 11 illus.
Signal Corps Contract No. R-65-8-99811-SC-01-91
U.S.D.A. Project No. 3-99-15-102
Unclassified Report

A demonstration battery containing an 880-curie polonium-210 heat source has been constructed and tested. The battery initially had an open circuit voltage of 23.6 volts, a maximum output of 161 milliwatts, and an overall efficiency of 0.57 per cent.

Details for the construction of the battery generator are given.

UNCLASSIFIED

Nuclear batteries
— Design
— Construction

Batteries

Isotopes (Radioactive)
— Applications

Signal Corps Contract No. R-65-8-99811-SC-01-91

B. C. Blanke

AD _____ Accession No. _____

Mound Laboratory, Monsanto Chemical Company, Miamisburg, Ohio
NUCLEAR BATTERY - THERMOCOUPLE TYPE
8th QUARTERLY REPORT - B. C. Blanke
MLM-CF-59-1-54, 31 Dec. 1958, 30 p., 11 illus.
Signal Corps Contract No. R-65-8-99811-SC-01-91
U.S.D.A. Project No. 3-99-15-102
Unclassified Report

A demonstration battery containing an 880-curie polonium-210 heat source has been constructed and tested. The battery initially had an open circuit voltage of 23.6 volts, a maximum output of 161 milliwatts, and an overall efficiency of 0.57 per cent.

Details for the construction of the battery generator are given.

UNCLASSIFIED

Nuclear batteries
— Design
— Construction

Batteries

Isotopes (Radioactive)
— Applications

Signal Corps Contract No. R-65-8-99811-SC-01-91

B. C. Blanke

AD _____ Accession No. _____

Mound Laboratory, Monsanto Chemical Company, Miamisburg, Ohio
NUCLEAR BATTERY - THERMOCOUPLE TYPE
8th QUARTERLY REPORT - B. C. Blanke
MLM-CF-59-1-54, 31 Dec. 1958, 30 p., 11 illus.
Signal Corps Contract No. R-65-8-99811-SC-01-91
U.S.D.A. Project No. 3-99-15-102
Unclassified Report

A demonstration battery containing an 880-curie polonium-210 heat source has been constructed and tested. The battery initially had an open circuit voltage of 23.6 volts, a maximum output of 161 milliwatts, and an overall efficiency of 0.57 per cent.

Details for the construction of the battery generator are given.

UNCLASSIFIED

Nuclear batteries
— Design
— Construction

Batteries

Isotopes (Radioactive)
— Applications

Signal Corps Contract No R-65-8-99811-SC-01-91

B. C. Blanke

AD _____ Accession No. _____

Mound Laboratory, Monsanto Chemical Company, Miamisburg, Ohio
NUCLEAR BATTERY — THERMOCOUPLE TYPE
8th QUARTERLY REPORT - B. C. Blanke
MLM-CF-59-1-54, 31 Dec. 1958, 30 p., 11 illus
Signal Corps Contract No. R-65-8-99811-SC-01-91
U.S.D.A. Project No. 3-99-15-102
Unclassified Report

A demonstration battery containing an 880-curie polonium-210 heat source has been constructed and tested. The battery initially had an open circuit voltage of 23.6 volts, a maximum output of 161 milliwatts, and an overall efficiency of 0.57 per cent.

Details for the construction of the battery generator are given.

UNCLASSIFIED

Nuclear batteries
— Design
— Construction

Batteries

Isotopes (Radioactive)
— Applications

Signal Corps Contract No R-65-8-99811-SC-01-91

B. C. Blanke

NUCLEAR BATTERY-THERMOCOUPLE TYPE
EIGHTH QUARTERLY PROGRESS REPORT
OCTOBER 1, 1958 TO DECEMBER 31, 1958

B. C. Blanke

Date: 31 December 1958

Issued: APR 8 1959

The object of this contract is to conduct research on radioactive materials and thermocouples suitable for the direct conversion of heat to electrical energy.

U. S. Army Signal Corps Contract No. R-65-8-99811-SC-01-91

U. S. Army Signal Research and Development Laboratories Technical Requirement Nos. P. R. and C. 58-ELS/R-3705, 58-ELS/O-3861 (S)

U. S. Department of the Army Project No. 3-99-15-102

MOUND LABORATORY
Miamisburg, Ohio
Operated By
MONSANTO CHEMICAL COMPANY
Research and Engineering Division

United States Atomic Energy Commission
Contract Number AT-33-1-GEN-53

CONFIRMED TO BE UNCLASSIFIED
MOUND DECLASSIFICATION OFFICE
RAYMOND RATAY A.D.D. DATE: 4/29/98

D I S T R I B U T I O N

	Copies
Dr. Carroll A. Hochwalt, Vice Pres., Monsanto Chem. Co.	1
Mr. H. K. Nason, Proj. Dir., V. P., Monsanto Chem. Co.	1
Mr. W. B. Creamer, Area Mgr., DAO, USAEC	1
Mr. E. C. McCarthy, Plant Mgr., Mound Laboratory	1
Mr. D. L. Scott, Dir. of Production, Mound Laboratory	1
Dr. J. F. Eichelberger, Dir. of Research, Mound Laboratory	1
Mr. J. R. Wiesler, Dir. of Engineering, Mound Laboratory	1
Mr. J. H. Birden, Mound Laboratory	1
Mr. B. C. Blanke, Mound Laboratory	1
Dr. J. W. Heyd, Mound Laboratory	1
Mr. K. C. Jordan, Mound Laboratory	1
Dr. S. R. Gunn, LRL, Livermore, Calif.	1
Mr. D. W. King, Patent Attorney, ALO, USAEC	1
Tech. Info. Service Extension, Oak Ridge, Tenn.	2
Library and Records Center, Mound Laboratory	15
Tech. Lib., OASD(R&E), Rm 3E1065, The Pentagon, Wash. 25, DC	1
Ch of R&D, OCS, Dept. of the Army, Wash 25, DC	1
Ch Sig Off., Dept. of the Army, Wash. 25, DC, Attn: SIGRD	1
Director, USNRL, Code 2027, Wash. 25, DC	1
CO and Director, USNEL, San Diego 52, Calif.	1
Cmdr, WADC, WPAFB, Ohio, Attn: WCOSI-3	2
Attn: WCLEE-1	1
Cmdr, AFCRC, CROTLR-2, L. G. Hanscom Field, Bedford, Mass.	1
Cmdr, RADC, Griffiss AFB, Rome, NY, Attn: RCSSID	1
Cmdr, ASTIA, Arlington Hall Station, Arlington 12, Va.	9
CG, U.S. Army Electronic Proving Ground, Ft. Huachuca, Ariz.	1
Chief, Bur. of Ships, Dept. of the Navy, Wash. 25, DC, Attn: Code 560S	1
Attn: Cdr. Frankenberger	1
Nav. Ord. Lab., Rm A-022, Silver Spgs. 19, Md., Attn: Mr. Hellfritzsch	1
Nat. Bur. Stnds, Electrochemistry Sec(Div 1.9), Wash. 25, DC	1
CG, Army Ballistic Missile Ag., Redstone Ars., Ala. Attn: Dr. E. Stuhlinger	1
CG, Diamond Ord. Fuze Labs, Wash. 25, DC, Attn: Mr. R. Goodrich	1
Radio Corp. of America, Camden, NJ, Attn: Mr. Swanson	1
Jet Propulsion Lab, Cal. Inst. of Tech., Pasadena 3, Calif.	1
Radiation Research Corp., New York, NY	1
The Martin Company, Middle River, Baltimore 3, Md.	1
National Carbon Co., Box 6116, Cleveland, O. Attn. Mr. Foecking	1
CG, USASRDL, Ft. Monmouth, NJ, Attn: Director of Research	1
CG, USASRDL, Ft. Monmouth, NJ, Attn: Tech. Docs. Ctr.	1
CG, USASRDL, Ft. Monmouth, NJ, Attn: Adj. Br. Mail, File and Records	1
CG, USASRDL, Ft. Monmouth, NJ, Attn: Chief, Tech Info Div. (FOR RE-TRANS TO ACCREDITED BRITISH & CANADIAN GOVT REPRESENTATIVES)	3
Continental Army Command LnO, USASRDL, Ft. Monmouth, NJ	3
CO, USASESA, Ft. Monmouth, NJ, Attn: SIGFM/ES-ASA	1
CG, USASRDL, Ft. Monmouth, NJ, Attn: SIGFM/EL-P	1
CG, USASRDL, Ft. Monmouth, NJ, Attn: SIGFM/EL-SX, Dr. W. J. Ramm	1
CG, USASRDL, Ft. Monmouth, NJ, Attn: SIGFM/EL-PS	3
Dr. Emil Kittl, USASRDL	1
CG, USASRDL, Ft. Monmouth, NJ, Attn: SIGFM/EL-PSP	1
	78

TABLE OF CONTENTS

	Page
ABSTRACT	4
CONFERENCES	4
FACTUAL DATA	5
CONCLUSIONS	11
KEY TECHNICAL PERSONNEL	12
APPENDIX	13

Fabrication of Battery Components and Battery Assembly

PURPOSE

Radioactive materials and thermocouples suitable for use in a system for the direct conversion of heat to electrical energy will be investigated. Isotopes having suitable characteristics will be determined, heat sources will be designed, and prototype batteries will be constructed.

ABSTRACT

A demonstration battery containing an 880-curie polonium-210 heat source has been constructed and tested. The battery had initially an open circuit voltage of 23.6 volts, a maximum output of 161 milliwatts, and an overall efficiency of 0.57 per cent.

Details for construction of the battery generator are given.

CONFERENCES

Dr. Emil Kittl and Mr. Stuart Shapiro, USASRDL, visited Mound Laboratory on 16 December 1958, where they observed loading of the heat source into the thermoelectric generator. Several suggestions for next year's work were discussed and will be covered fully at a future meeting.

During the past quarter a demonstration battery was constructed. The battery was designed to have a power output of 50 milliwatts at 4.8 and 1.2 volts after six months with a heat source containing 1100 curies of polonium-210. Since the battery was to be used for demonstration, certain modifications were built into the outer case, and a biological shield for transporting and demonstrating was built.

A test heat source containing 430 curies of polonium had been made previously to check transfer and sealing techniques. Although this source was made successfully, there was no way to check how much activity was transferred until the source was sealed. Therefore, when the source for the battery was made, it was not known until after it had been sealed that it contained only 880 curies rather than the 1100 curies which had been planned. Except for this incomplete transfer, the heat source was made successfully. It maintained itself at temperatures in excess of 600°C in the battery. It was removed several times from the battery and showed no sign of leakage. The heat source design has been used by The Martin Company for initial studies on their Snap III program.

The generator was essentially a duplicate of Generator No. 6 which was described in the April-June, 1958 progress report (MLM-CF-58-7-19). The grooves in the nickel sleeve which holds the heat source were narrower than in Generator No. 6 and, on assembly, the sleeve twisted about 20 degrees. The result was that the insulating thread of silica in

the grooves beside the hot junctions had to be eliminated. This put a greater dependency upon the nickel oxide coating for electrical insulation.

The outer container was made of 0.015-inch brass for convenience in sealing with Eutectic Company No. 157 solder. The battery was assembled as follows: The generator was slipped into and centrally located in the 0.015-inch brass sleeve of 3-inch length. A thin brass ring 5/16 inch in length was inserted at both ends to hold the generator. The two generator outputs (16 cards and 4 cards) were soldered to four Stupakoff seals in the upper cover, and the upper cover was soldered in place. The bottom cover, which had a 0.5-inch threaded hole in its center was also soldered in place. The generator was then filled with helium under pressure and checked for leaks with a helium leak detector.

On finding the container leak tight, the polonium-210 source was inserted through the hole. The generator was filled with Santocel that had been outgassed at 600°C and allowed to cool in argon. Additional Santocel packed into the generator gave a greater output, so as much Santocel was packed into the generator as possible under nominal pressure. The generator was then exposed to an argon atmosphere overnight. A screw cap with a ceremic pin was then screwed into the bottom cover and soldered. The ceramic pin was spring-mounted and pressed against the source thus holding it in place. The generator was then hermetically sealed with an argon atmosphere.

The output of the generator was measured in two ways, (1) inserted in a 26°C water bath, and (2) inserted in cooling fins in air.

The output of the generator was stable to 0.01 per cent and was insensitive to tapping the generator.

Two shorts were inadvertently caused by application of a voltage of 57 volts in excess of the generator output while attempting to measure the point at which Peltier cooling and Joulean heating are equivalent. This was equal to about 90 milliamperes of current in the generator. The short was caused by voltage breakdown of the nickel oxide insulation, and not due to a temperature increase.

Subsequent repairs and work on the generator caused a continuous degradation of the generator. All junctions and leads became so fragile that all were scrapped. New cards and junctions were made, and the battery was completely rebuilt.

From an experimental point of view much was learned from the failures, and, in general, we have more confidence than before that a rugged and trouble-free generator can be constructed. A summary of the repair work required follows.

The generator was disassembled by unsoldering the end plates. This required higher temperatures than the original soldering. The polonium heat source had to be tapped out of the sleeve. When the heat source was removed, the short disappeared. To find the short, leads had to be fixed to each card and the heat source reinserted. The shorts did not appear until the Santocel insulation had been replaced, the temperature had almost returned to a maximum, and 77 per cent of maximum open circuit

voltage had been reached. The two cards containing the shorts were removed. This caused the efficiency of the generator to increase since the heat source contained only 880 curies rather than the 1100 curies for which it had been designed.

The generator was reassembled, but while the end plates were being soldered, it was dropped on the floor still encased in a heavy "C" clamp. Although it seemed to be intact, an open circuit appeared. After repair of a broken lead and resoldering of the end plate, the generator was found to be noisy. This was found to be due to the penetration of solder flux into the cold junction supports.

The generator was again disassembled and all cards were removed for cleaning. The narrow-grooved sleeve was replaced with another sleeve having wider grooves. Five replacement cards were made, and the best of the old cards were used in the reassembly. In this assembly more and thinner Sauereisen cement was used, and the Santocel insulation was not outgassed or filled with argon. The generator behaved satisfactorily for several days, but then it suddenly failed. All leads, and particularly the Constantan wires had oxidized in the vicinity of the Sauereisen cement and the hot junctions.

At this point complete reconstruction of the mica card assemblies was undertaken, and the generator was completely rebuilt with particular care taken to minimize the amount of Sauereisen cement used. Eighty-five per cent of the cement thinner was replaced with water. The

Santocel was outgassed at 650°C and cooled under argon. Before loading the heat source into the generator, the generator was flushed with argon. Since being rebuilt, this battery has been operating smoothly without noise for over a month.

An experiment was conducted to insure that merely holding the thermocouples at 650°C was not the cause of junction oxidation and failure. Six thermocouples (0.005-inch Chromel-Constantan) were sealed in a quartz tube. No attempt was made to exclude air during the sealing. The tube was heated for five days at 650°C. Only slight oxidation of the surface of the wires occurred and the junctions were not changed in strength, ductility, or electrical characteristics. This experiment tends to confirm our belief that the damage occurred where the Sauereisen thinner acted as a flux on the wires in the presence of air-saturated Santocel.

For demonstration a finned stand was made. The fins cool the exterior surface of the battery by air convection and also tend to prevent persons from obtaining too great a radiation dose from handling the battery during demonstrations. The radiation comes from the polonium-210 which emits one gamma ray for every 10^5 alpha particles. Although this ratio is very low, the large concentration of polonium makes the gamma hazard appreciable.

When the heat source had decayed to 815 curies, the following gamma measurements were taken:

Distance where radiation dropped below 2.2 mr/hr	=	97.5 cm
Reading at finned radiator surface	=	0.72 r/hr
Reading at battery case surface	=	1.4 r/hr
Reading through one inch of lead at surface	=	50 mr/hr
Reading at heat source surface	=	7 r/hr

For handling and transportation a case was designed and built which had a minimum of one inch of lead in all directions. This cut the radiation level below that required by the ICC, but the container has not been approved as yet by the U. S. Bureau of Explosives.

CONCLUSIONS

A battery has been constructed and tested which contained initially 880 curies of polonium-210 as a heat source. The battery is performing well over the first month's period, and from an experimental point of view we have much more confidence that a rugged and trouble-free battery can be constructed.

IDENTIFICATION OF KEY PERSONNEL

Bertram C. Blanke	(274 hours)
Kenneth C. Jordan	(120 hours)
John H. Birden	(548 hours)
John L. McKinney	(548 hours)
Elton L. Murphy	(274 hours)

APPENDIX: FABRICATION OF BATTERY COMPONENTS AND BATTERY ASSEMBLY

This appendix has been written to describe the methods used to fabricate the parts for the generator. Because of the small size of the battery, parts had to be uniform in size, and various jigs had to be devised to hold the parts during assembly. Drawings and photographs have been added where possible to make the description easier to follow.

THERMOCOUPLE FABRICATION

A machinist's lathe (Monarch Model EE) was used to gas weld the thermocouples so that each would have as nearly identical shape and electrical properties as possible. An oxygen-propane torch was mounted on the compound of the lathe. A vertical vernier adjustment was provided for the torch. Gases fed to the torch were measured through rotometers for reproducibility of flame size and temperatures. The lathe was set so that the carriage moved at 1.12 inches per second. The torch nozzle was adjusted to point straight down with the point of the inner flame cone just touching the ends of the two wires to be welded.

The wires were held in a wire feeding and holding assembly (Figure 1 and 2). This assembly consisted of a flat steel plate (1) measuring 6 x 1-1/2 x 1/8 inches. A replaceable wire guide (2) was screwed into one end of the plate. A wire height gauge (3), which could be swung over the wire guide, was mounted on the top side, and a wire holding clamp (4) was mounted underneath. Since the flame passed directly over the mounting

590012

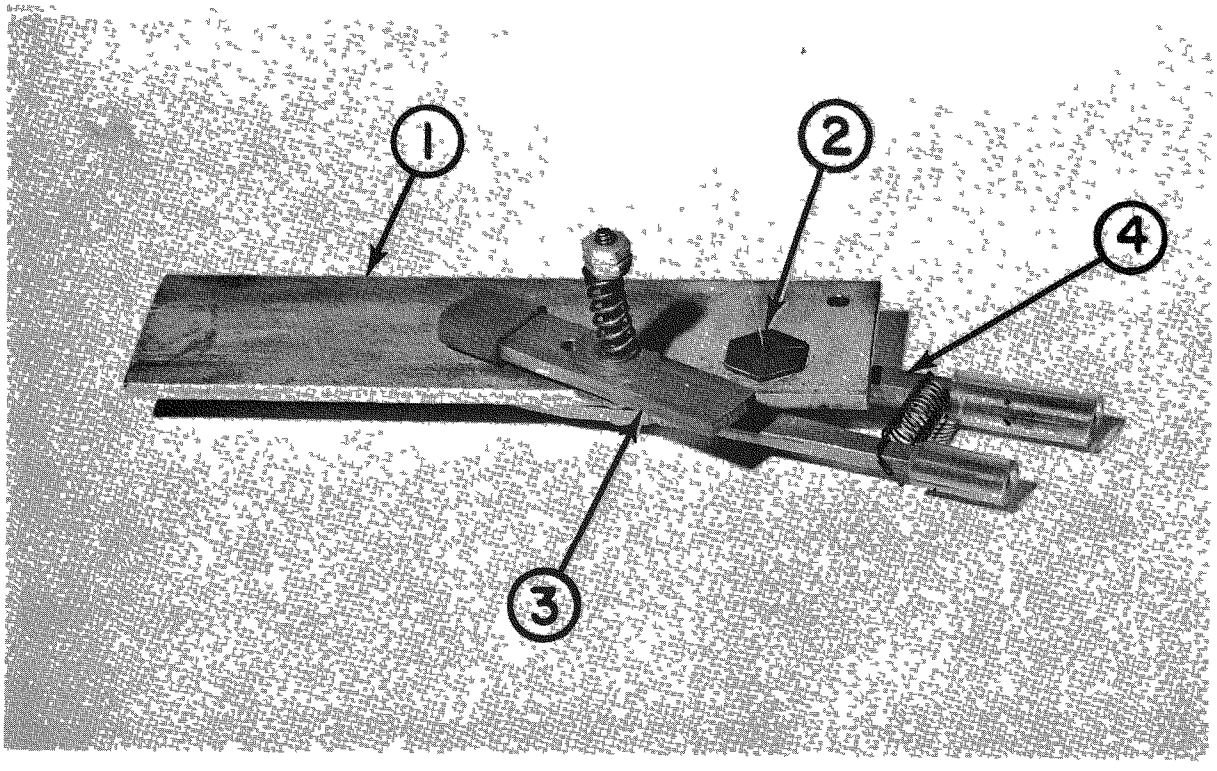

Figure 1 Wire Feeding and Holding Assembly - Top

590011

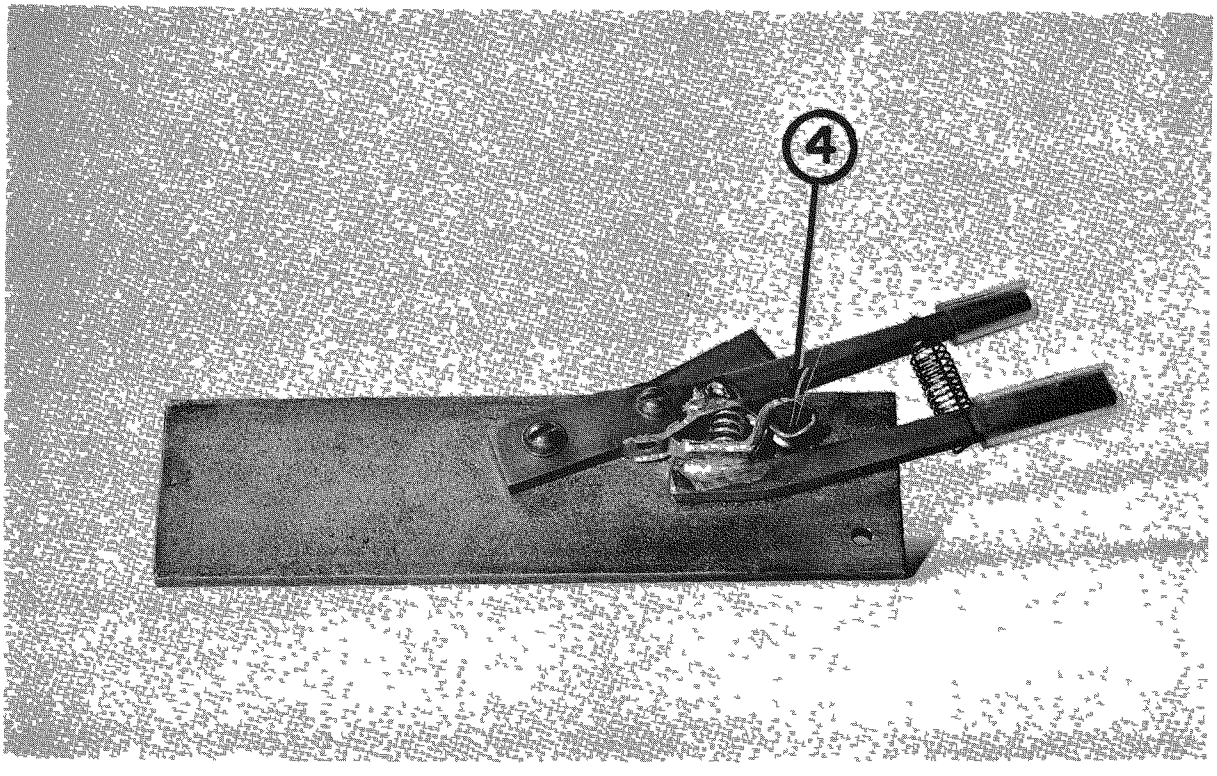

Figure 2 Wire Feeding and Holding Assembly - Bottom

plate, it was water-cooled by a copper tube (not shown) soldered to it. Rolls of thermocouple wire were mounted on a free turning arbor below the lathe. The wire came up through two adjacent guide holes which were located directly below the hole in the wire guide. The thermocouple wire was B and S size No. 32 (0.008 inch), and the wire height gauge was adjusted to allow the wire to protrude through the wire guide 0.047 to 0.050 inch.

The wire guide was replaceable and was made from a 5/8-inch, stainless steel hexagonal cap screw. The head of the screw was cut to 0.050 inch thickness and all but one complete turn of the thread was cut off. A 1/4-inch drill was used to remove most of the metal from the screw shaft leaving less than 0.025 inch of metal. A No. 76 drill (0.020 inch) was used to complete the hole. The hole was shaped somewhat by peening the metal with a miniature chisel. The size and shape of the hole was adjusted so that the 0.008-inch Chromel-P-Constantan wires would just slide through without binding. The hole was oval, and the long axis was parallel to the line of the carriage and torch travel on the lathe.

The wires were aligned with the highest melting wire (Chromel) threaded on the side nearest the flame so that it was heated first during the initial pass of the flame. The welding was accomplished by passing the torch over the thermocouple wires and then back to its original position. The return pass usually improved the thermocouple head shape by a slight remelt.

The thermocouples had to be shaped before they could be used. Since the mica sheet used in the cards was selected to be 0.003 inch in thickness, a

piece of 0.003-inch feeler gauge stock two inches long whose edges had been rounded was mounted vertically in a machinist's clamp. Each thermocouple was spread over the end of the feeler gauge stock, pulled down, and the ends returned to a closed position parallel to the feeler gauge stock. With the thermocouple in this position, a clamp with a 0.020-inch spacer (a small pair of pliers with brass shim stock mounted between the jaws) shaped the width of the thermocouple head. The thermocouple was removed from the feeler gauge stock, turned 90° and squeezed to a maximum width of 0.010 inch by another similar clamp. The final size of each thermocouple head was then 0.020 by 0.010 inch. The thermocouple leads had to be straight and parallel for at least two inches measured from the head. The lead ends were placed in a soft flame that would melt Constantan but not Chromel-P. This operation produced a small bead on the Constantan for identification purposes.

MICA CARD THERMOPILE ASSEMBLY

Only mica sheet of uniform thickness and free from crystal defects was used. Crystal defects increased the probability of mechanical breakage, particularly in the area of the carefully machined grooves, which were fragile.

The 0.003-inch mica sheet was cut into rectangular pieces 2 by 1-1/8 inches, or about 1/8 inch wider than the finished card. A Bard-Parker scalpel, a straight edge, and a Masonite cutting block were used to cut the sheet. Frequent sharpening of the blade tip to keep it as thin as practical

prevented undue cracking and separation of the mica edges. A number of 2 x 1-1/8 x 0.002 inch brass shim stock pieces equal to the number of mica cards to be shaped were made, and a sandwich of mica and brass shim stock was built up. This was held together by two pieces of 2-1/2 x 1-1/8 x 3/8 inch flat steel bar stock with screws at either end. This assembly was ground to dimensions in a precision grinder. Notches were cut in the card edge to hold the thermocouple heads and the cold junctions. A water-base coolant was used except for grinding the grooves, where cocoanut oil in carbon tetrachloride was used. A mica card and matching piece of brass shim stock are shown in Figure 3.

A mica card was mounted in the thermocouple assembly jig, (5) shown in Figures 4 and 5. Thermocouples (6) were strung on the mica card, (7), Chromel-P on one side and Constantan on the other, and held in place by rubber bands (8) adjusted for light tension. After all the thermocouples were in place and before the rubber bands were released, the thermocouples were placed in a clamp (9) made of 1/4-inch square, cold rolled steel with 1/32-inch rubber pads. It was clamped close to the edge of the card on the cold junction side. The rubber bands were released and the assembly was removed from the jig.

The cold junction wires were then paired off for series electrical connection. The wires were twisted together with the aid of a small plastic rod which had two holes drilled in the end and angled slightly away from the axis of the rod. All twisting was done in the same direction. The hot junctions turned slightly because of twisting of the leads. The twisting operation

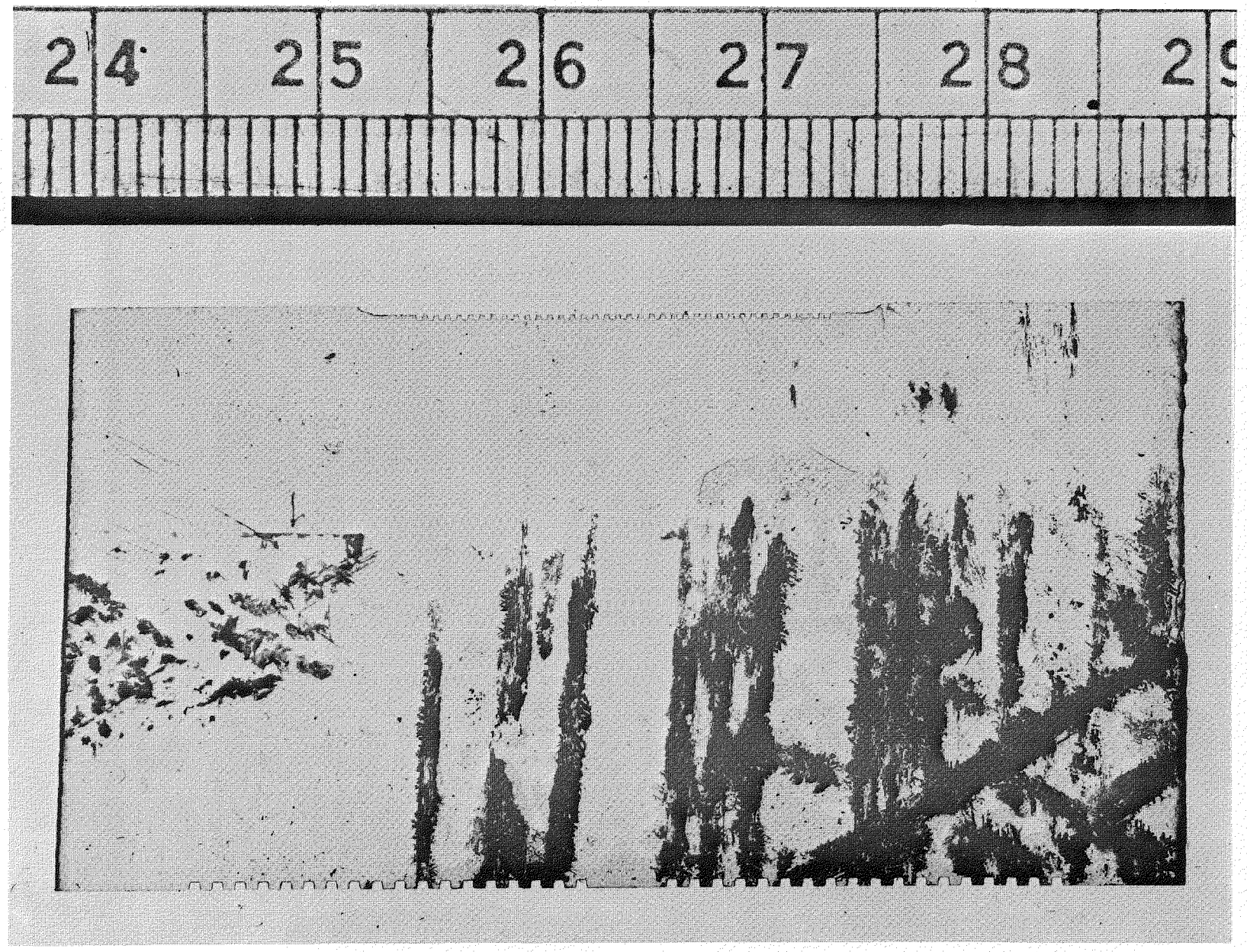

Figure 3 Mica Card

580332

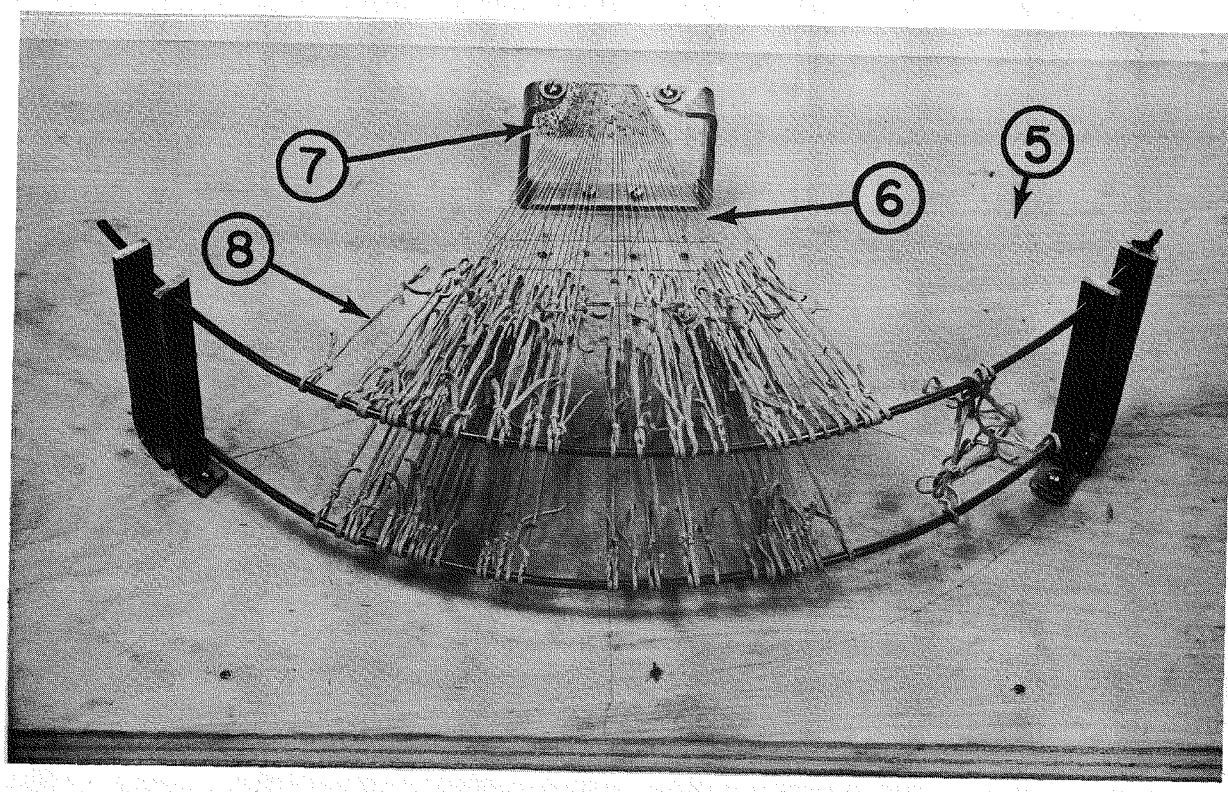

Figure 4 Mica Card in Thermopile Assembly Jig

580333

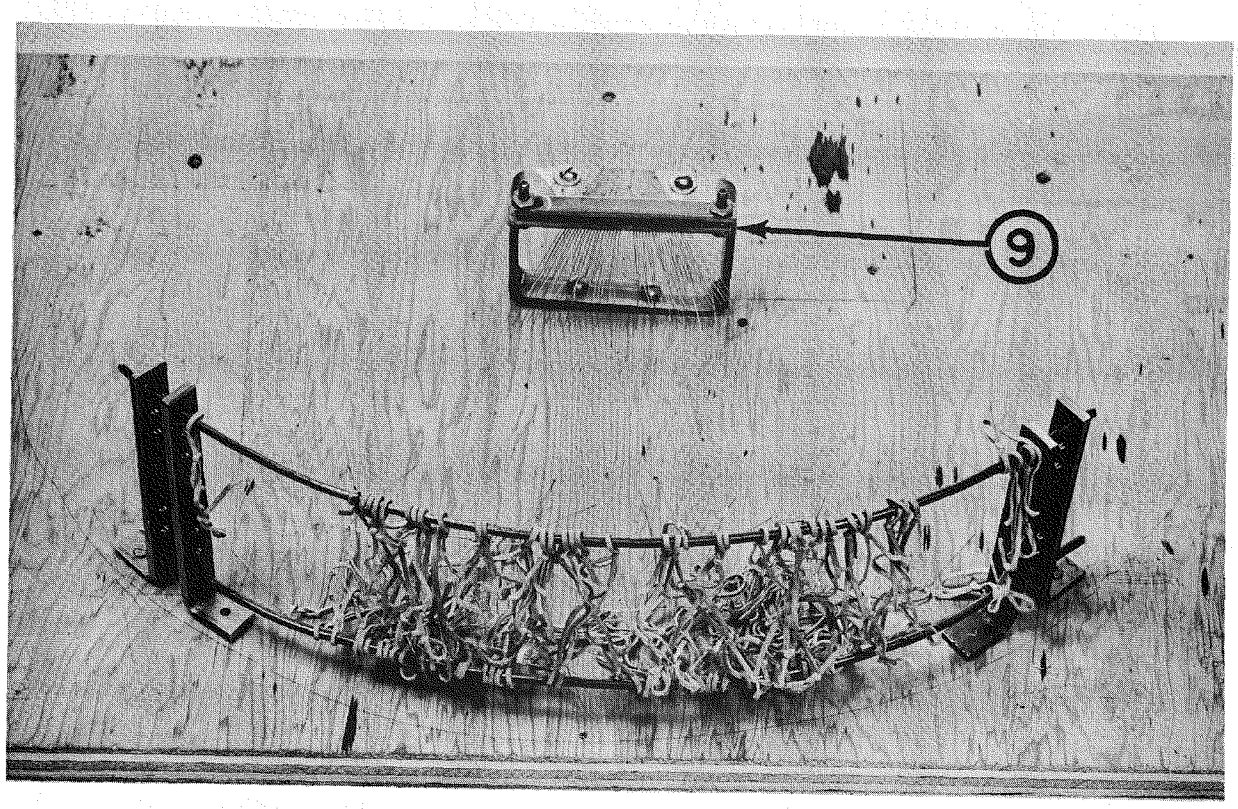

Figure 5 Mica Card in Jig After Clamp Applied

brought the cold junctions as close to their final positions as possible. The cold junctions were cut 1/8 inch longer than their final length and were silver soldered. A commercially-available, low-melting mixture of powdered silver solder in a paste flux was used. A small microtorch (oxygen-propane) made of three millimeter O.D. quartz tubing was used for the soldering. The quartz tube was made by pulling it down a capillary, bending this to a 30° angle and cutting the tip. Gases for the torch were controlled by microvalves. Explosion protection was provided by stuffing the tube with copper turnings and by placing a flexible metal sleeve over all but the torch tip. Soldering was done by directing the microtorch flame away from the mica card and at a small angle toward the end of the cold junction. By moving the flame backwards toward the card with a light stroking motion, the flux melted first and ran ahead of the solder. As the running solder was difficult to see and flowed very rapidly, each junction had to be inspected for proper bonding. The cold junctions were then cut to the proper length and compressed between parallel vise jaws to give them a uniform thickness and to flatten any projections that might later puncture the insulation and short the thermopile.

The end leads of each card were threaded through two small holes drilled about half way up the card edge. The shorter these leads could be made, the lower the internal impedance became, and the higher the absolute efficiency.

The assemblies were washed in hot water and rinsed with distilled water to remove all flux. The heads of the thermocouples were not all the same

length and it was necessary to grind the tips to size. A jig clamp was made of two 1/2-inch square Stellite tool blanks, lined with 1/64-inch rubber pads, and held together with parallel jaw clamps. The thermopile card was clamped in the Stellite bars with just the excess amount of thermocouple tips protruding. A small arbor holding a disc of 600 mesh "wet or dry" emery paper was mounted in a high speed (22, 000 rpm) hand grinder, and the tips were gently ground flush with the Stellite surface.

The mica card corners used to support the thermopiles during assembly were cut, and the cards were then placed in a furnace and heated at 450°C for 30 minutes. This formed a protective oxide layer on the Constantan, but did not affect the Chromel-P surface.

STRUCTURAL FRAMEWORK ASSEMBLY

The heat source was supported in the center of the generator by a nickel sleeve (10) as shown in Figures 6 and 7. The inner sleeve had 20 grooves (11) for aligning the hot junctions. Preparation of the sleeve consisted of deburring and polishing, oxidizing in a muffle furnace for 30 minutes at 1000°C, and cooling at the furnace rate. Very little oxidizing occurred below 900°C.

The aluminum frame consisted of 20 cold junction bars (12) and two support rings (13). Each part was anodized, and the assembly was held together by 0-80 filister head brass screws. Each cold junction bar consisted of two

590010

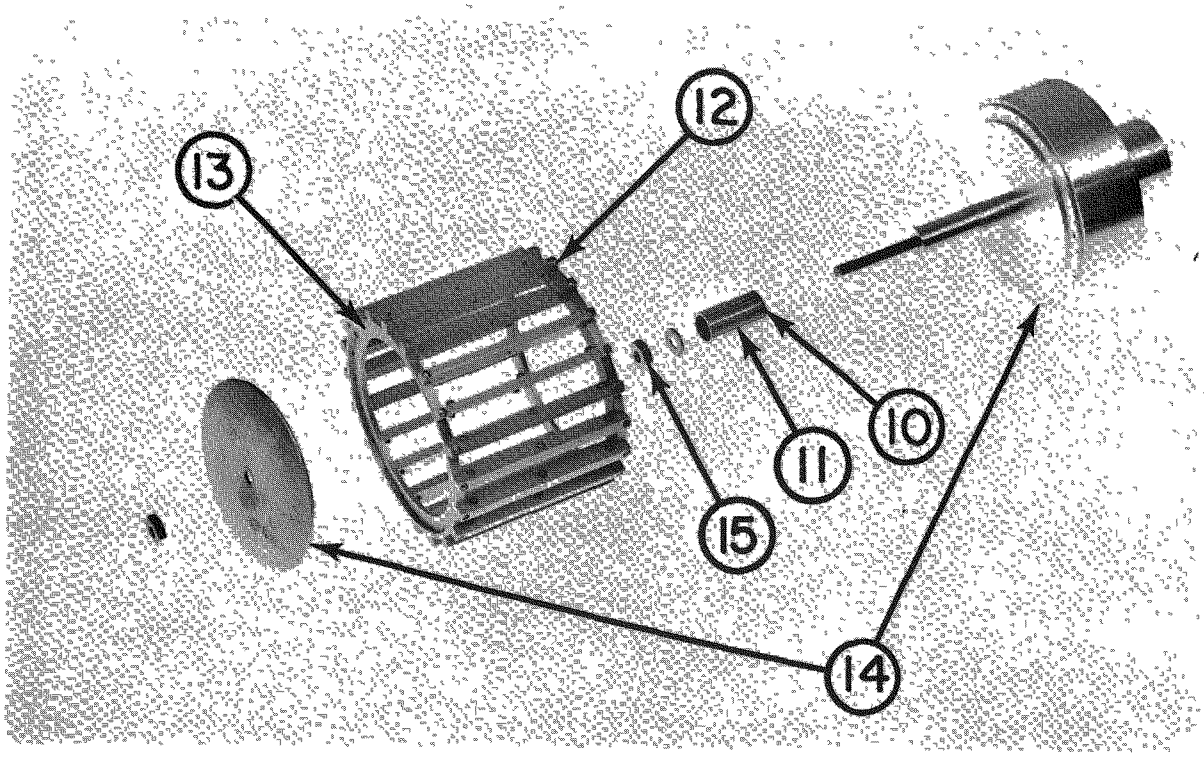

Figure 6 Exploded View of Thermoelectric Generator Structure and Jig

590007

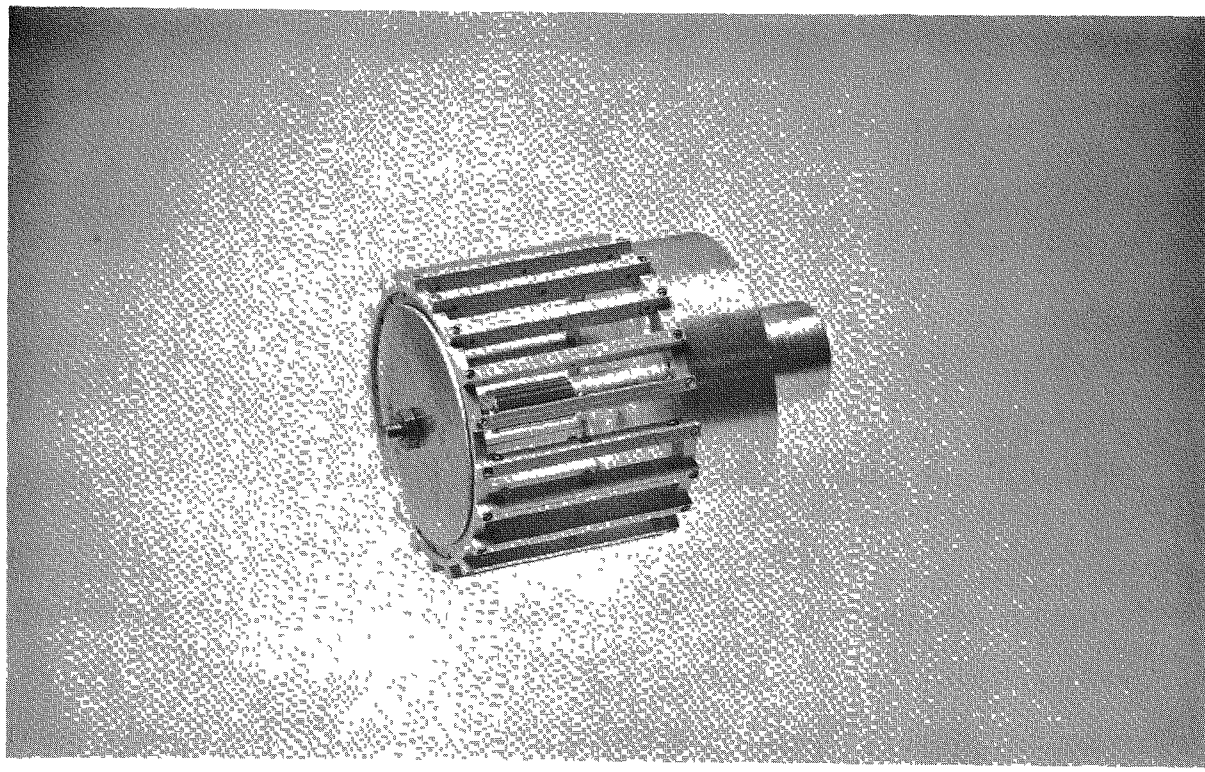

Figure 7 Assembled View of Thermoelectric Generator Structure and Jig

aluminum pieces electrically insulated from the thermocouples by two 0.003-inch Teflon strips. These strips also acted as thermal contacts for heat flow to the cold junction bars and ultimately to the cold sink.

The frame was mounted on a lathe jig (14). The nickel sleeve was slid over the center portion of the jig to properly orient the cold junction bars of the support frame and was tightened into place by the end nut (15). The structural frame was then removed, and 0.003-inch thick mica strips were placed on the bottom of the grooves of the nickel sleeve for electrical insulation. The structural frame was then replaced.

FINAL ASSEMBLY PROCEDURE

The jig was mounted in the lathe for ease of handling. The cold junction bar that was being worked on was loosened and a small piece of 0.001-inch shim stock was inserted between the bar and the frame and the screws tightened. The mica cards and the Teflon strips were inserted and held firmly in place while the clamping strip of the cold junction bar was screwed down. Alternate cards were placed in the frame in reversed order to maintain short leads. To prevent the hot junctions from touching the sides of the grooves in the nickel sleeve a silica fiber thread was forced into the groove on either side of the hot junctions. The 0.001-inch shim stock was removed from under the cold junction bars and the bars screwed tight. This pressed the hot junctions firmly against the mica insulation thus decreasing thermal resistance at this point.

A thin slurry of Sauereisen Cement No. 7 diluted with one part of No. 15 thinner and five parts of water was sparingly spread on the hot junctions, soaked into the grooves, and spread on the areas between the cards. This kept down the possibility of shorting the Chromel-P wires at the hot junctions and improved the thermal path to the hot junctions. Care had to be taken to use this sparingly as excess amounts greatly accelerated the corrosion of the Constantan wires. Each of the 20 thermopile cards were assembled in the generator framework in this fashion. The whole unit was baked at 75°C for one hour and then at 150°C for an additional hour.

The structural frame was carefully removed from the jig and the leads from each card were silver soldered in series with care taken to keep the leads short. Output leads of Teflon-covered copper were attached. It was found to be advisable to check at this point to insure that no card was reversed electrically since the output would be decreased by twice the voltage of each card so reversed.

All the openings were closed with masking tape and the outside diameter was turned on a lathe to the required size for a snug fit in the battery container. The masking tape prevented introduction of dirt and chips which might cause electrical shorts. The counterbore for the 0-80 screws holding the cold junction bars was such that a small portion of the screw head was removed. This locked the screws and prevented their vibrating loose after insertion of the assembly into the battery case.

The battery case had all its seals made with Eutectic Corporation No. 157 solder and flux. As this flux is a very good electrical conductor and since there was no way to remove the flux from the battery after the final seal, all parts to be soldered were tinned with the No. 157 solder and then washed thoroughly with water. The output terminals in particular had to be cleaned to prevent a low resistance path from developing. The generator was assembled in the case except for the heat source, the ends being held in place by a large "C" clamp. Two rings of No. 157 solder (top and bottom) were formed just within the lip of the case. Flux made by dissolving rosin in acetone was painted on the area to be soldered. A flexible, woven-glass tape heater was wrapped around the outer can, and the whole container was heated to approximately 150°C. A gun-type soldering iron tinned with the No. 157 solder was used to seal the ends in place. Rosin was used as the final flux because of its very high electrical resistivity. All flexible internal leads were Teflon insulated. The battery case was leak tested at this point by filling with helium under pressure and checking with a leak detector.

The heat source (Figure 8) consisted of polonium encapsulated in telescoping stainless steel containers each of which was closed by Heliarc welding. The heat source was loaded into the battery through the hole provided in the battery case and the void space of the battery was filled with opacified Santocel insulation. "Opacified" Santocel had been made

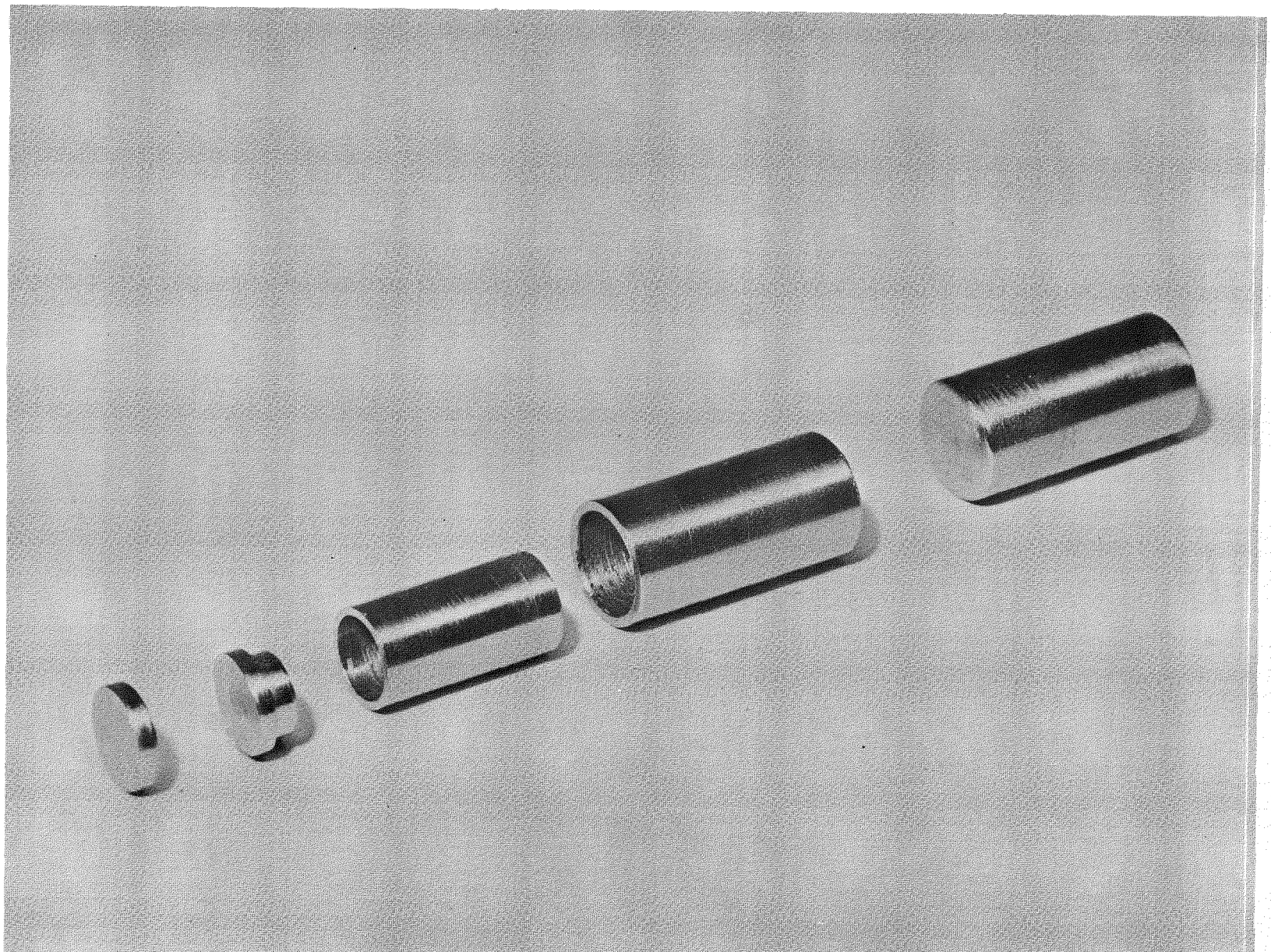

Figure 8 Heat Source - Exploded View

by adding 10 to 15 per cent by weight of finely ground silicon metal to Santocel and mixing thoroughly. The opacified Santocel was then outgassed at 650°C and cooled under argon. The generator was flushed with argon and the Santocel was introduced in an argon-filled desiccator. No voids could be left in the battery interior since the output would vary depending on its gravitational orientation due to shifting of the insulating material. The Santocel was packed under moderate pressure. After filling, the battery was allowed to stand in the argon atmosphere for 20 hours to diffuse any residual air from the interior.

A ceramic rod 0.063 inch in diameter and backed up by a small spring was mounted in the end plug. A very small quantity of Silicone stop-cock grease was placed at the sleeve holding the rod to keep it in place when inverting to seal the battery. The end plug was soldered by previously described techniques.

The assembled battery with the heat source in place had to be kept in a good heat exchanger. A finned heat exchanger, shown in Figure 9, was designed for demonstration purposes. A lead container (Figure 10) was designed for carrying and storage. The finished battery without heat exchanger is shown in Figure 11.

HEALTH PRECAUTIONS AND RADIATION DOSAGE

Polonium for most purposes is considered to be a pure alpha emitter. However, there is a small percentage of 0.8 Mev gamma present. Radiation dosage must be considered when working with quantities greater than 100 curies. Quantities less than this would not develop sufficient temperature to power a useful thermoelectric generator.

Figure 9 Heat Exchanger and Battery

580429

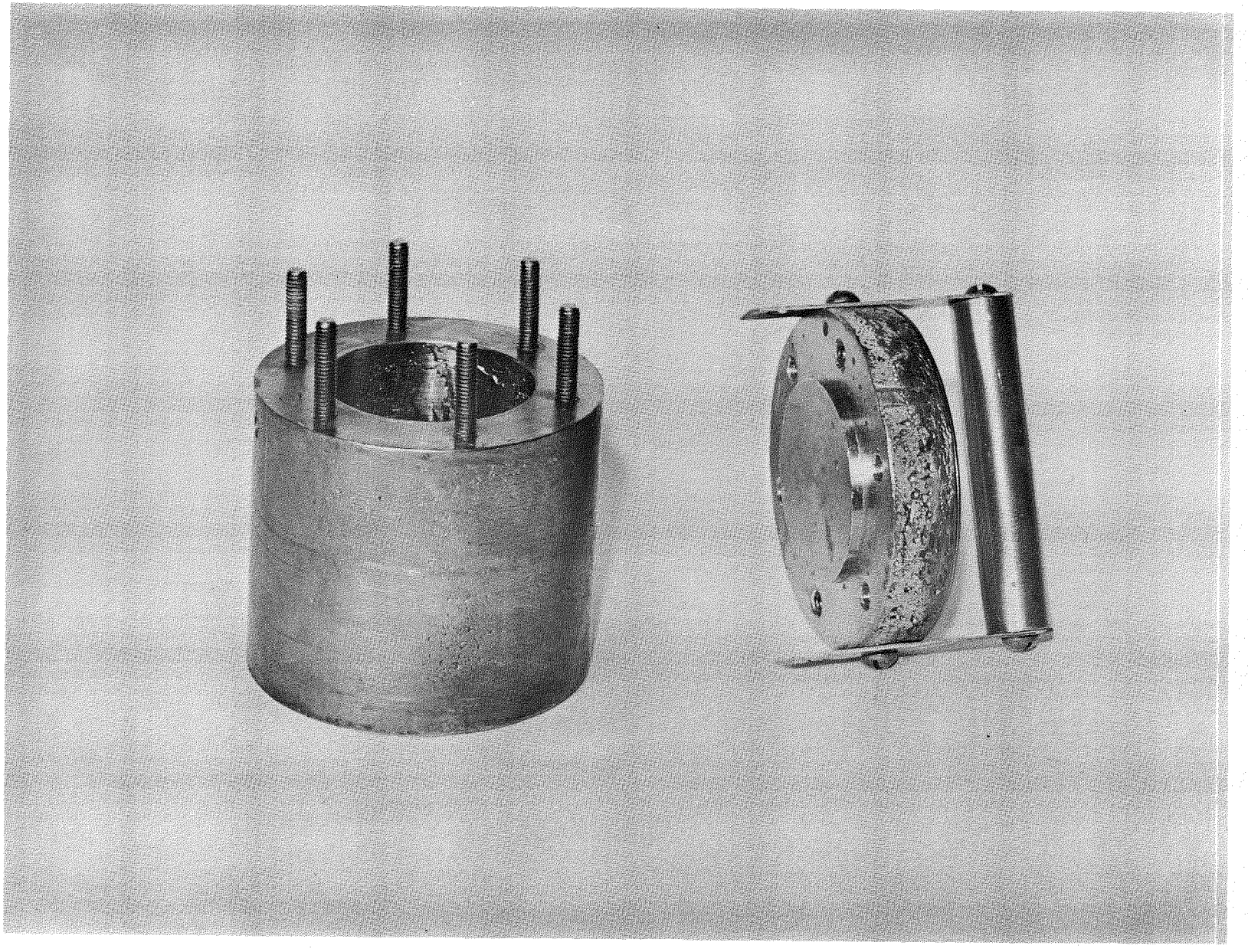

Figure 10 Lead Storage and Shipping Cask

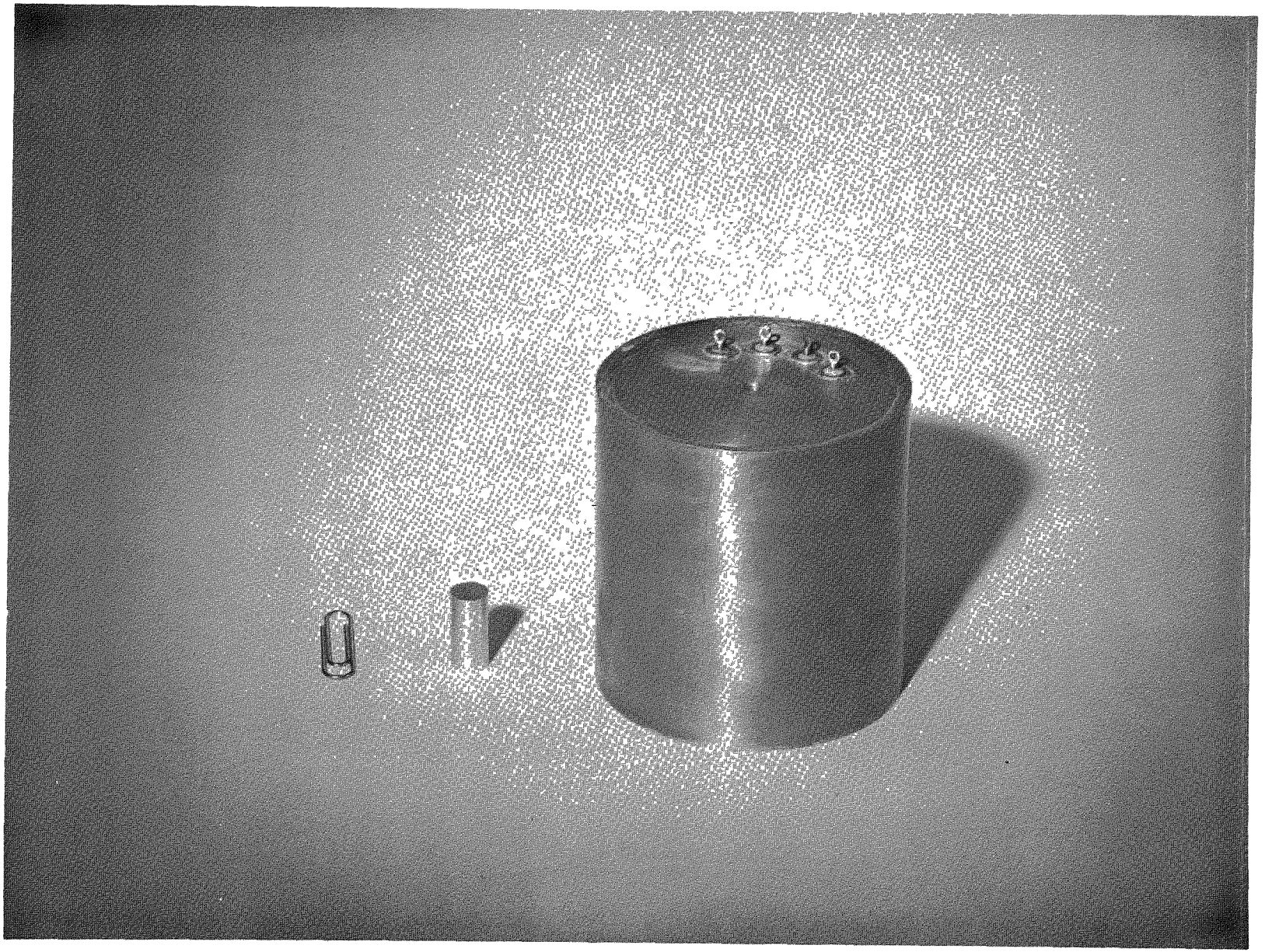

Figure 11 Finished Battery and Heat Source