712302

878

(R)

Oak Ridge, Tennessee

MY:JAH

(June 6, 1960)

[redacted]

Dear Mr. and Mrs. Keller:

It is a pleasure to send you the enclosed report on the home radiation shielding tests which were conducted in Oak Ridge last summer.

Since you were kind enough to permit the use of your home in the test series, we thought you would like to have the results of the study. Chapters four and five give detailed information on the data obtained for each of the homes which were checked.

I wish to take this opportunity to express our appreciation for your cooperation in this program. The information obtained represents a significant contribution to our knowledge of radiation shielding afforded by various types of structures and materials.

Very truly yours,

S. R. Sapirie
Manager
Oak Ridge Operations

Enclosure:
"Experimental Evaluation of the Radiation Protection Afforded by Typical Oak Ridge Homes Against Distributed Sources"

MEDICINE, HEALTH & SAFETY 7

REPOSITORY Oak Ridge Operations Records Holding Area
COLLECTION Documents 1944-1994
BOX No. H-199-13 Bldg. 2714-H
FOLDER Medicine, Health & Safety 7- Experiments + Tests 1960 For Mr. Sapirie

BEST COPY AVAILABLE

1075293

IDENTICAL LETTERS SENT TO:

[redacted]
Oak Ridge

[redacted]
Oak Ridge

[redacted]
Oak Ridge

[redacted]
Oak Ridge

[redacted]
Oak Ridge

[redacted]
Farragut Community

[redacted]
Oak Ridge

[redacted]
Oak Ridge

1075294

AEC Category: HEALTH AND SAFETY

CEX-59.13

CIVIL EFFECTS EXERCISE

EXPERIMENTAL EVALUATION OF THE RADIATION PROTECTION AFFORDED BY TYPICAL OAK RIDGE HOMES AGAINST DISTRIBUTED SOURCES

T. D. Strickler and J. A. Auxier

Issuance Date: April 14, 1960

CIVIL EFFECTS TEST OPERATIONS
U.S. ATOMIC ENERGY COMMISSION

1075295

NOTICE

This report is published in the interest of providing information which may prove of value to the reader in his study of effects data derived principally from nuclear weapons tests.

This document is based on information available at the time of preparation which may have subsequently been expanded and re-evaluated. Also, in preparing this report for publication, some classified material may have been removed. Users are cautioned to avoid interpretations and conclusions based on unknown or incomplete data.

PRINTED IN USA
Price $0.50. Available from the Office of
Technical Services, Department of Commerce,
Washington 25, D. C.

AEC Technical Information Service Extension
Oak Ridge, Tennessee

1075296

EXPERIMENTAL EVALUATION OF THE RADIATION PROTECTION AFFORDED BY TYPICAL OAK RIDGE HOMES AGAINST DISTRIBUTED SOURCES

By

T. D. Strickler and J. A. Auxier

Approved by: R. L. CORSBIE
Director
Civil Effects Test Operations
Division of Biology and Medicine
U. S. Atomic Energy Commission

Oak Ridge National Laboratory
January 1960

1075297

TECHNICAL PARTICIPANTS

J. C. Ashley, Physics Department, University of Tennessee
J. A. Auxier, Health Physics Division, Oak Ridge National Laboratory
D. W. Forester, Physics Department, University of Tennessee
A. L. Frank, Physics Department, Vanderbilt University
R. Goodman, Health Physics Division, Oak Ridge National Laboratory
W. E. Kiker, Physics Department, University of Tennessee
W. W. Ogg, Health Physics Division, Oak Ridge National Laboratory
F. W. Sanders, Health Physics Division, Oak Ridge National Laboratory
T. D. Strickler, Physics Department, Berea College

1075298

ABSTRACT

The protection afforded against simulated fallout radiation has been evaluated for several typical homes in the Oak Ridge area. Nine houses were chosen to represent a variety of construction materials, topographical conditions, and sizes; they included three types of Oak Ridge Cemesto houses, one concrete-block house with a basement "fallout shelter," and two wood-frame houses. The protection factor (ratio of open-field exposure dose rate to exposure dose rate in the house) in all these houses ranged from 2 to 5 on the main floor and from 5 to 30 in the basements, except in the fallout shelter, where the protection factor was greater than 100. The analysis showed that sloping lots, common to Oak Ridge, do not appreciably affect the protection factor for the main floor. Owing to the generally increased exposure of the basement walls on such lots, the protection factors in the basements were typically lower than in similar basements built on level lots.

1075299

ACKNOWLEDGMENTS

The writers wish to express their appreciation to the participants, whose untiring efforts were responsible for the completion of the experiment. In addition, grateful acknowledgment for valuable contributions is made to each of the following:

(1) R. L. Corsbie and members of the CETO staff for their over-all support of the program.

(2) The home owners whose homes were used in the study:

Charles A. Keller, 106 Norwood Lane
George B. Lockhart, 108 Ogden Circle
George E. Miller, 106 Orchard Lane
Robert W. Skelton, 105 E. Newcomb Road
Paul P. Haydon, 115 Underwood Road
W. W. Grigorieff, 104 Ogden Circle
W. W. Ogg, Farragut Community
H. A. Parker, 117 W. Maiden Lane
H. G. Smith, 246 Alhambra Avenue

(3) The neighbors of the above home owners, without whose cooperation the exposures could not have been made.

(4) Other home owners, about 100, who volunteered their houses for the study. The limited time of the experiment and the locations, usually too close to a major thoroughfare, prevented their use.

(5) Edgerton, Germeshausen & Grier, Inc., Las Vegas, Nev., for the use of the source-pumping equipment, and also to their nucleonics personnel, who helped prepare the equipment for use.

(6) P. N. Hensley and W. A. Longaker for valuable engineering services.

(7) Oak Ridge Operations Office, USAEC, who handled the public relations and information aspects of the program. The experiment was accomplished much more smoothly because of the efforts of the personnel of the ORO office.

(8) The Oak Ridge Police Department, Paul Boyd (District Scout Executive), and the Eagle Scouts from Explorer Posts 126, 228, and 229, all of whom helped control traffic and maintain the exclusion area during operations.

1075300

CONTENTS

ABSTRACT 5

ACKNOWLEDGMENTS 6

CHAPTER 1 INTRODUCTION 9

CHAPTER 2 THEORY 10

CHAPTER 3 DESCRIPTION OF EXPERIMENTAL METHOD 12

3.1 General Description 12
3.2 Apparatus and Instrumentation 12
3.3 Typical Procedures 16

CHAPTER 4 PRESENTATION OF DATA 19

4.1 House A 19
4.2 House B 19
4.3 House D_1 20
4.4 House D_2 20
4.5 House D_3 20
4.6 House D_4 20
4.7 House CB 21
4.8 House WF_1 21
4.9 House WF_2 21
4.10 Summary of House Types and Measurements 22

CHAPTER 5 ANALYSIS OF DATA 40

5.1 House A 40
5.2 Houses B, D_1, and D_2 41
5.3 Houses D_3 and D_4 42
5.4 House CB 42
5.5 House WF_1 42
5.6 House WF_2 43

CHAPTER 6 COMMENTS AND DISCUSSION 51

ILLUSTRATIONS

CHAPTER 3 DESCRIPTION OF EXPERIMENTAL METHOD

3.1 Source Tubing Positioned on the Roof of a Type "D" Cemesto House 13

1075301

ILLUSTRATIONS (Continued)

3.2 Source Tubing Positioned on the Ground Around a "Phantom" Type "D" House 14
3.3 Trailer-mounted Source Pumping Unit and Source Shield 15
3.4 Control Console for Pumping Unit 15
3.5 Charger Reader Units for Pocket Ionization Chambers 17
3.6 Diagram of Source Capsule 17

CHAPTER 4 PRESENTATION OF DATA

4.1 House A; Dosimeter and Source-tubing Placement 23
4.2 House B; Dosimeter and Source-tubing Placement 25
4.3 House D_1; Dosimeter and Source-tubing Placement 27
4.4 House D_2; Dosimeter and Source-tubing Placement 29
4.5 House D_3; Dosimeter and Source-tubing Placement 31
4.6 House CB; Dosimeter and Source-tubing Placement 33
4.7 House WF_1; Dosimeter and Source-tubing Placement 35
4.8 House WF_2; Dosimeter and Source-tubing Placement 37
4.9 Cross Sections of Typical Cemesto Wall Construction 39

CHAPTER 5 ANALYSIS OF DATA

5.1 Exposure Dose Rate as a Function of the Radius of a Circular Contaminated Area for 1 mc/sq ft of Co^{60} 41

TABLES

CHAPTER 4 PRESENTATION OF DATA

4.1 Dose Rates Measured in House A 22
4.2 Dose Rates Measured in House B 24
4.3 Dose Rates Measured in House D_1 26
4.4 Dose Rates Measured in House D_2 28
4.5 Dose Rates Measured in House D_3 30
4.6 Dose Rates Measured in House D_4 30
4.7 Dose Rates Measured in House CB 32
4.8 Dose Rates from Single Length of Tubing Around House CB 32
4.9 Dose Rates Measured in House WF_1 34
4.10 Dose Rates from a Single Length of Tubing in Front of House WF_1 34
4.11 Dose Rates Measured in House WF_2 36
4.12 Summary of House Types and Measurements 38

CHAPTER 5 ANALYSIS OF DATA

5.1 Protection Factors in House A Calculated from Eqs. 2.3 and 2.4 44
5.2 Protection Factors in House B 45
5.3 Protection Factors in House D_1 46
5.4 Protection Factors in House D_2 47
5.5 Protection Factors in "D" Type House Assuming a Flat Lot 48
5.6 Protection Factors in House D on a Sloping Lot 48
5.7 Protection Factors in House CB 49
5.8 Protection Factors in House WF_1 50
5.9 Protection Factors in House WF_2 50

1075302

Chapter 1

INTRODUCTION

The Oak Ridge House Shielding Project, in support of the AEC community self-protection program, was completed during the summer of 1959. The objective was to measure the protection factors offered by different types of homes against heavy fallout such as might be experienced in the case of a nuclear attack. Information was desired on the effects of terrain, heavy furniture, etc., on this protection factor. This would supplement the information from work done under more controlled, but less typical, conditions.[1-3]

The civil defense aspects of the problem were well publicized in the local papers as well as on radio and TV programs. On the basis of this publicity, almost one hundred persons in the vicinity of Oak Ridge volunteered the use of their homes for the tests. From these, nine houses were selected for the experiment. These were chosen to represent a variety of types and sizes and included three types of Oak Ridge Cemesto houses, one concrete-block house with a basement "fallout shelter,"* and two wood-frame houses with sloping lots of particular interest.

REFERENCES

1. J. A. Auxier, J. O. Buchanan, C. Eisenhauer, and H. E. Menker, Experimental Evaluation of the Radiation Protection Afforded by Residential Structures Against Distributed Sources, Civil Effects Test Operations, Report CEX-58.1, January 1959.
2. C. Eisenhauer, Analysis of Experiments on Light Residential Structures with Distributed Co^{60} Sources, Report NBS-6539, October 1959.
3. E. T. Clark et al., Measurement of Attenuation in Existing Structures of Radiation from Simulated Fallout, Technical Operations, Inc., Report TO-B 59-4, April 1959.

*This shelter was not complete since one wall was not of the desired thickness.

1075303

Chapter 2

THEORY

The protection factor at any point is defined as the ratio of the exposure dose rate* 3 ft above an infinite plane uniformly contaminated with a radioactive material to the dose rate inside the house at the specified point when the house (roof) and ground are covered by the same source distribution. Thus, the protection factor will provide a measure of how much less dose would be experienced inside the house than outside in the same radiation field.

Since it is impractical to approximate an infinite-plane radiation field, it is convenient to consider the dose rate from the infinite plane as made up of two parts:

$$D_0 = D_1 + D_2 \tag{2.1}$$

where D_0 is the dose rate 3 ft above the uniformly contaminated infinite plane, D_1 is the portion of that dose rate from a circular area of radius r about the point of measurement, and D_2 is the dose rate from the area outside the circle of radius r. In general, the value of r considered in the subsequent discussion depends on the experimental limitations and represents the radius of the area actually covered by the source distribution.

The dose rate D inside the house also can be considered to be made up of several parts:

$$D = R + G_1 + G_2 \tag{2.2}$$

where R is the dose rate from the roof contamination, G_1 is the dose rate from the ground around the house within an area of radius r, and G_2 is the dose rate from more distant areas. The first two terms on the right-hand side of Eq. 2.2 can be measured, but G_2 must be calculated. With the above terminology, the protection factor is given by

$$PF = \frac{D_0}{D} = \frac{D_1 + D_2}{R + G_1 + G_2} \tag{2.3}$$

An approximation to the protection factor might be obtained by neglecting the effects of radiation from distant portions of the ground:

$$PF' = \frac{D_1}{R + G_1} \tag{2.4}$$

where all the terms on the right represent measured quantities in any particular experiment.

It has been demonstrated experimentally[1,2] that dose rates above rectangular source distributions can be calculated to within 10 per cent by considering them to be circular configu-

Dose rate, as used hereinafter, will refer to *exposure dose rate*.

1075304

rations of the same total area if the width of the rectangle is not less than about 50 per cent of the length. This is verified by open-field measurements presented here and justifies the use of circular geometries in the above calculations.

The dose rate D_1 at a height h above the center of a flat circular area of radius r, uniformly contaminated with a source strength S per unit area, is given by

$$D_1 = 2\pi SC \int_0^r \frac{\rho d\rho}{\rho^2 + h^2} \tag{2.5}$$

where C is the dose rate at unit distance from a point source of unit strength. This neglects the effect of absorption in the air and of build-up due to air scatter. These effects tend to cancel each other, making the over-all error not greater than 4 per cent for the geometries used in these measurements.

The total dose rate D_0 from an infinite plane is, of course, markedly affected by air scatter and absorption. An estimation of this dose rate can be obtained from the equation

$$D_0 = 2\pi CS \int_0^\infty \frac{e^{-\mu(\rho^2 + h^2)}}{(\rho^2 + h^2)} \left[1 + 0.85\mu(\rho^2 + h^2)^{1/2}\right] \rho d\rho \tag{2.6}$$

where μ is the absorption coefficient of air for the particular radiation under study. The exponential term accounts for the absorption in air, and the term in brackets is an approximation to account for build-up due to air scatter.[3] This integral can be evaluated with the help of tables of the exponential integral function.

The applicability of shielding factors for fallout radiation based on measurements utilizing Co^{60} has been discussed by Eisenhauer.[2] In general, the protection factors for fission-product and Co^{60} gamma radiation should compare to within 10 per cent.

REFERENCES

1. J. A. Auxier, J. O. Buchanan, C. Eisenhauer, and H. E. Menker, Experimental Evaluation of the Radiation Protection Afforded by Residential Structures Against Distributed Sources, Civil Effects Test Operations, Report CEX-58.1, January 1959.
2. C. Eisenhauer, Analysis of Experiments on Light Residential Structures with Distributed Co^{60} Sources, Report NBS-6539, October 1959.
3. E. Shapiro, A Technique for Predicting Radiation Fields in Military Structures, Report USNRDL-TR-63, September 1955.

1075305

Chapter 3

DESCRIPTION OF EXPERIMENTAL METHOD

3.1 GENERAL DESCRIPTION

A situation simulating uniform fallout on the house and grounds was provided by laying out a long length of tubing on the roof and around the house in such a way as to have an approximately uniform length per unit area within a circular area of radius r. A radioactive source of Co^{60} was then pumped at a constant speed through the tubing by a hydraulic pumping system. Thus, for an integral number of cycles through the tubing, the source was effectively distributed evenly over all portions of the area covered by the tubing. Figure 3.1 shows a typical example of a roof layout on an Oak Ridge "D" type house (see Table 4.12).

The integrated doses at specific points inside the house were measured by placing ionization chambers at these points. In several cases both the ground and the roof areas were covered with simulated fallout, and the dose from each was measured separately. If these values were suitably normalized, they could be added to determine the total dose.

For determination of the protection factor, the same array of tubing was placed on a flat open field, and the dose in a phantom house* was measured 3 ft above the center of the array under the conditions employed for measurements in houses. The layout for a measurement of the dose from one-half the ground portion around a phantom house is shown in Fig. 3.2.

3.2 APPARATUS AND INSTRUMENTATION

The equipment used in the experiment was transported in three vehicles: a trailer, a jeep station wagon, and a pickup truck. The trailer contained the pumping system (furnished by Edgerton, Germeshausen & Grier, Inc., including control console) and the source shield and is shown in Fig. 3.3. The hydraulic pumping system,† shown on the right, was designed to supply a variable pressure differential as high as 200 psi. This was sufficient to pump ethylene glycol through the complete circulation system, which consisted of about 2000 ft of plastic tubing, the source shield, a set of valves to control and reverse the direction of flow, and a 40-gal storage tank for the excess fluid.

The plastic tubing, some of which can be seen in Figs. 3.1, 3.2, and 3.3, was made of a hardened polyethylene with a uniform inside diameter of 0.5 in. and a 0.125-in. wall thickness. It was cut into four lengths of approximately 500 ft each for ease in handling.

The console, containing the controls for the equipment, is shown in Fig. 3.4. The associated cables for this console were long enough to enable the operator to control the pump

---

*The word "phantom" is used throughout to designate measurements in an open field at points above a source array corresponding to one used in a house.

†This system was similar to that used by Technical Operations, Inc., and described in TO-B 59-4 (see Chap. 1, Ref. 3).

1075306

Fig. 3.1—Source tubing positioned on the roof of a type "D" cemesto house.

1075307

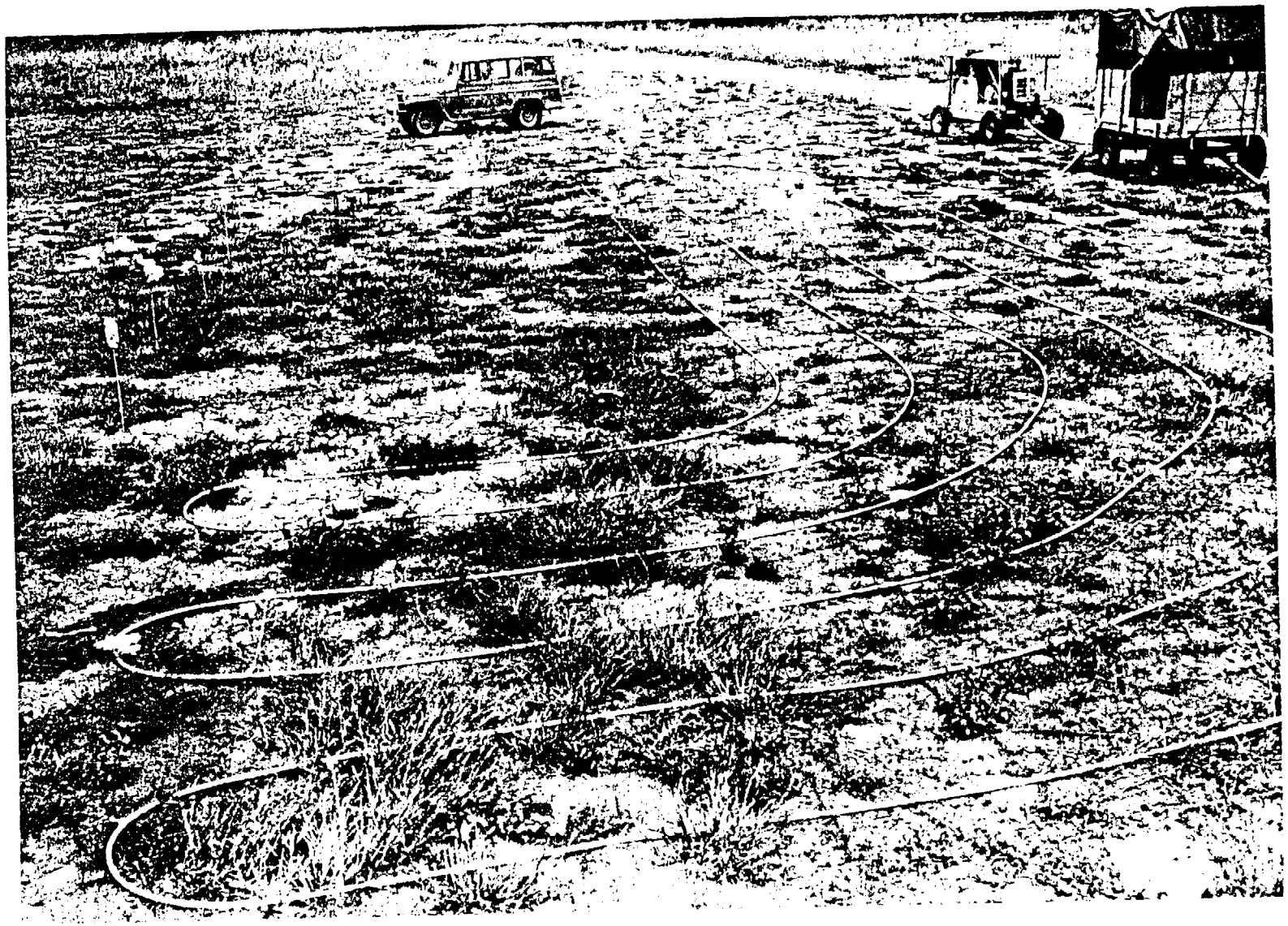

Fig. 3.2—Source tubing positioned on the ground around a "phantom" type "D" house.

1075308

Fig. 3.2—Source tubing positioned on the ground around a "phantom" type "D" house.

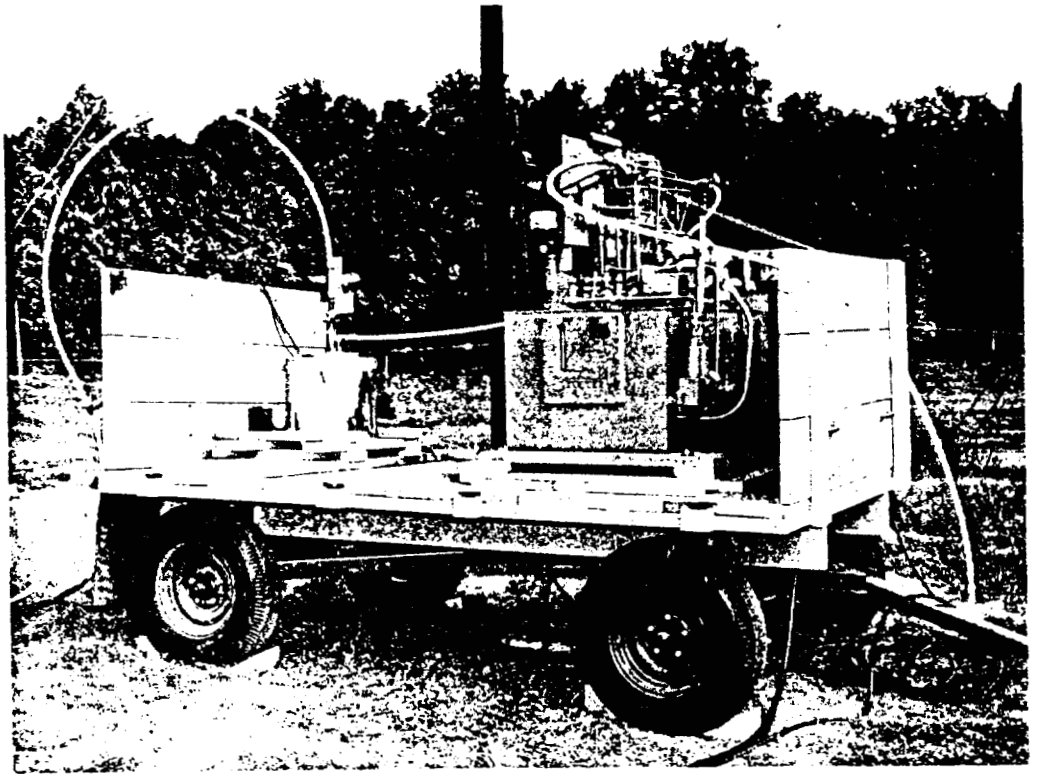

Fig. 3.3—Trailer-mounted source-pumping unit and source shield.

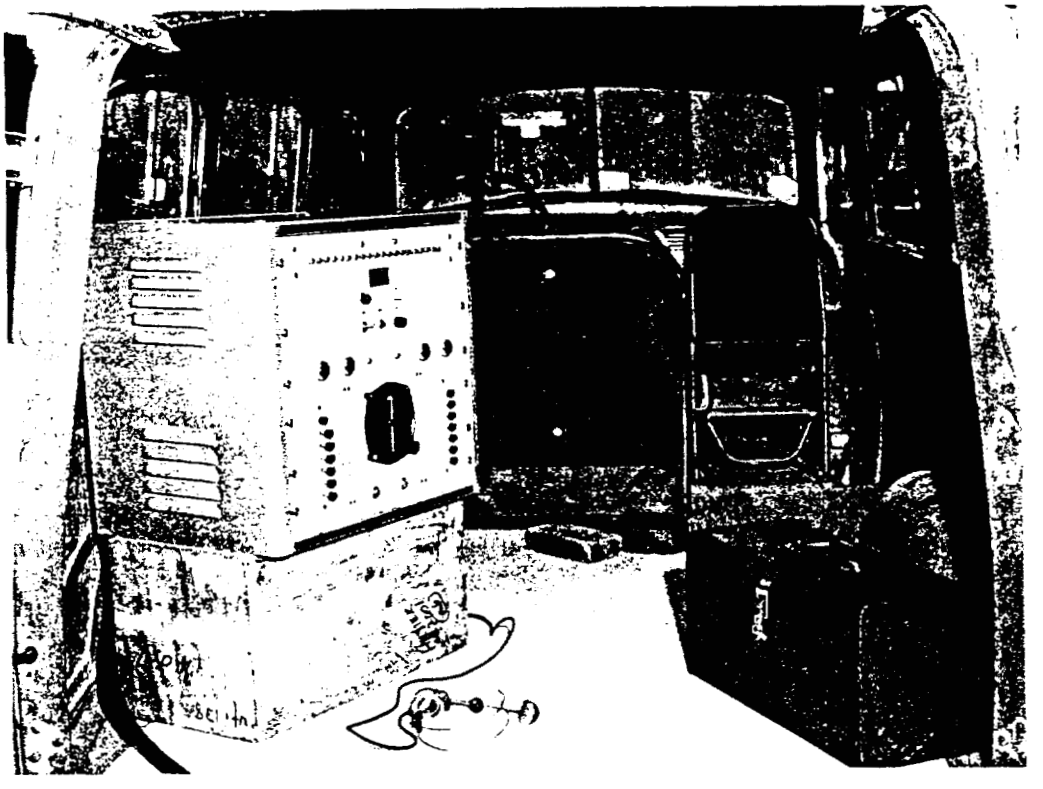

Fig. 3.4—Control console for pumping unit.

1075309

from several hundred feet away. The row of lights at the top of the console was controlled by transducers, which were used to signal the location of the source in the tubing. The plastic tubing was sufficiently translucent that a small light shining through it onto a photocell would produce enough current to actuate a relay. When the source capsule passed through the tubing, the light was interrupted, and the transducer turned on the appropriate light. One of these transducers was used to mark the exit of the source capsule from the shield; it can be seen mounted on the tubing just above the shield in Fig. 3.3.

Dose measurements were made with Victoreen pocket ion chambers, model 362 (PIC's). For most measurements these were read on a Victoreen model 240 string minometer. Where it was anticipated that the total dose during a complete run would be less than about 5 or 10 mr, a pulse type read-out device was used. This type instrument, which has been described in the literature,[1] effectively measures the magnitude of the pulse produced when the chamber is recharged after being irradiated. Although individual PIC's varied by as much as 40 per cent when read on this instrument, it was found that an average of six or eight readings would give values that were consistent within 10 per cent when the exposure dose was of the order of 1 to 10 mr. Figure 3.5 is a photograph of the minometer (left, rear) and the pulse reader (center). These instruments were kept in an air-conditioned room at constant temperature; they were not transported to the site of the tests. Three calibrations of the minometer made during the summer showed a variation of less than 10 per cent. It was assumed that in a temperature-controlled room the daily variation in the calibration would be small.

The Co^{60} source was encased in a stainless steel capsule accurately machined to fit the inside of the plastic tubing. A diagram of the source capsule is shown in Fig. 3.6. Two such source capsules were assembled. One contained a source having an effective strength of 1.6 curies when measured in the capsule with the capsule in the tubing; the other was 18 curies under the same conditions. The 18-curie source was used for exposures at three of the houses which were sufficiently isolated so that no more than one or two houses had to be evacuated during the exposure.

3.3 TYPICAL PROCEDURES

The experimental routine involved in a typical house test could be completed in about eight to ten hours. The equipment was moved to the site in the morning. The tubing was laid out in the desired array on the roof of the house and held temporarily to the roof with masking tape. Chains, which had been previously cut to the proper length and provided with hooks on each end, were used to obtain quickly the proper spacing of the tubing. For arrays on the ground, the tubing was unrolled in a spiral around the house and held in place with wire wickets. Transducers were spaced at strategic points to enable the operator to determine the approximate source position as it moved through the tubing. The control console was located at a safe distance from the tubing (about 75 ft from the 1.6-curie source and about 200 ft from the 18-curie source).

Approximately 150 PIC's were distributed inside the house. These were supported on ring stands in groups of six at each station; these six were oriented in different directions to minimize the effect of any angular variation in the measurement. Measurements were made in each house to determine the dose distribution along a line through the approximate center of the house (in the long dimension). Six stations were, therefore, located as close to this line as possible. Other points of particular interest, such as utility rooms, areas near fireplaces and heavy bookcases, areas above slab floors, etc., were also selected as dosimeter stations.

The equipment was usually ready for operation by 12:00 noon or by 1:00 PM, and the home owners and neighbors were asked to vacate the premises until about 5:00 PM. This usually allowed time for two exposures of 1 to 2 hr each; in some cases exposures for the roof portion were made separately from the ground-area exposures in order to compare the doses from the two. Electric power for the pump was supplied by a portable generator, which was originally taken for emergency use but which proved to be more convenient and reliable than the house circuits. After the first exposure the dosimeters were taken back to the laboratory to be read while the second exposure was being made with an identical array of freshly charged dosimeters.

1075310

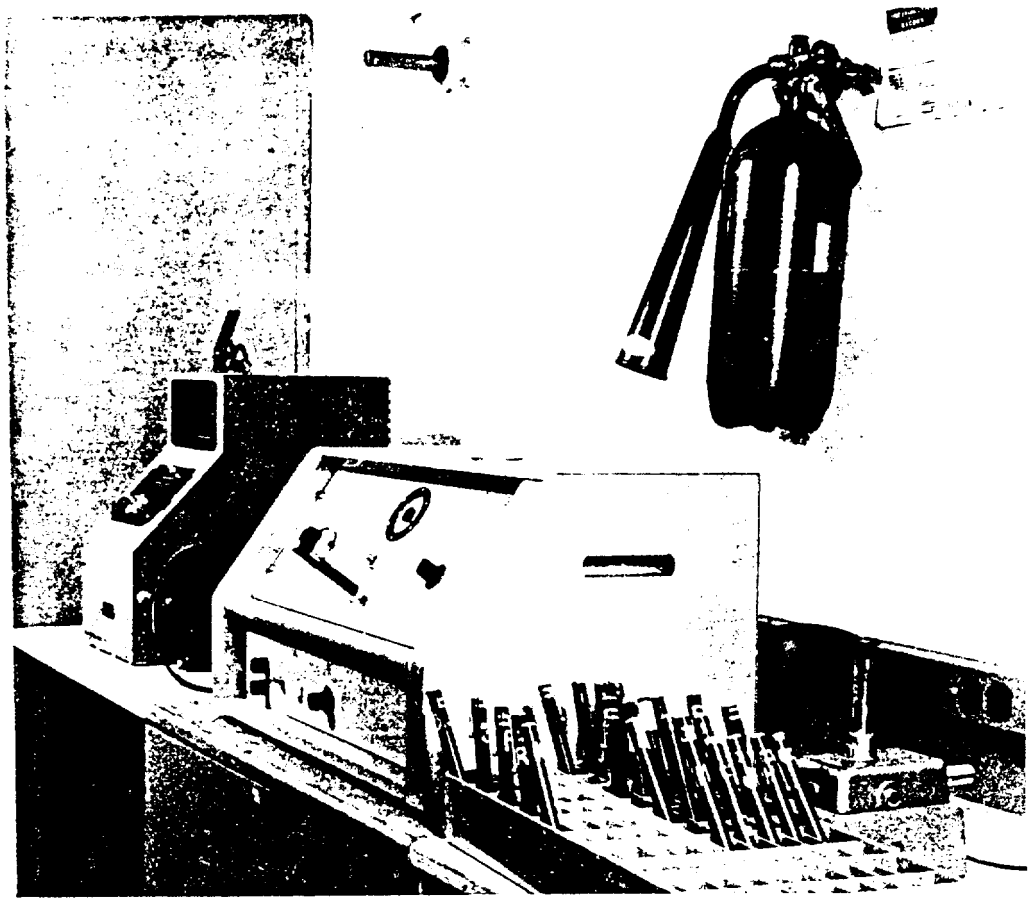

Fig. 3.5 — Charger reader units for pocket ionization chambers.

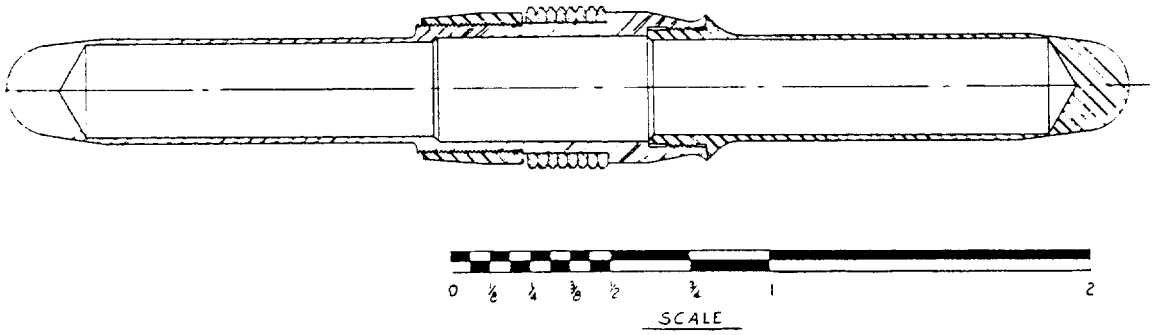

Fig. 3.6 — Diagram of source capsule.

1075311

At the end of the exposures, the source capsule was pumped back into the shield, the ethylene glycol in the tubing was pumped back into the reservoir, the tubing was rolled up, and the equipment was taken back to the Laboratory.

REFERENCE

1. W. C. Roesch, R. C. McCall, and F. L. Rising, A Pulse Reading Method for Condenser Ion Chambers, Health Physics 1(3); 340 (December 1958).

1075312

e ethyl-
nd the

er Ion

Chapter 4

PRESENTATION OF DATA

The data are presented for each house separately. At each station the readings of the six dosimeters were averaged, and the average value was corrected for temperature and minometer calibration and normalized to give the dose rate in milliroentgens per hour per millicurie per square foot (mr/hr per mc/sq ft) at standard temperature and pressure. The source distribution in millicuries per square foot was obtained by dividing the source strength (in millicuries) by the total area covered by the tubing (square feet). Dosimeter locations in the houses are indicated by letters on the figures, and the dose rates at these points are given in the tables. Vertical traverses at these points are designated by subscripts; the subscript number indicates the height above the floor (in feet). All other measurements were at a height of 3 ft above the floor.

4.1 HOUSE A

House A was an Oak Ridge type "A" Cemesto* house with wood siding (standard drop siding nailed directly to the existing walls), a full basement, and an added carport on one side. The tubing was not placed on the roof of the carport but was placed on the floor so that the results would be more representative of the unmodified type A house. Part a of Fig. 4.1 shows the floor plan of the house and the locations of the dosimeter stations; part b shows the plan of the basement. Shaded areas represent concrete or brick construction. Part c indicates the slope of the ground around the house and the level of the ground surface on the various sides, and part d is an illustration of the array in which the tubing was laid out. The total effective area covered by the tubing was 5100 sq ft, and the vertical projection of the roof area amounted to 870 sq ft of this total. The 1.6-curie Co^{60} source was used in this test, and this resulted in an effective source distribution of 1.84 mc/sq ft on the roof and 0.376 mc/sq ft on the ground area.

The doses in the house from the ground and roof portions were measured separately, and the normalized values at each station are given in columns 2 and 3 of Table 4.1. Stations C_1, C_2, and C_3 refer to measurements at 1-ft, 3-ft, and 5-ft heights, respectively, at station C. All other measurements were made at a height of 3 ft. Station I was located above a 4-in.-thick concrete-slab floor in the utility room.

4.2 HOUSE B

House B was a typical Oak Ridge type "B" Cemesto frame house, modified only with wood siding (same as House A) on the outside. There was no basement, only a crawl space under the house. Part a of Fig. 4.2 shows the details of the house. The layout of the tubing and the ground

*Cemesto is the trade name for a commercial insulating panel.

1075313

levels around the house are noted in b and c. The total effective area covered by the tubing was 5400 sq ft, and the roof area, including the porch, was 1100 sq ft. The normalized dose rates at the stations shown in part a are given in columns 2 and 3 of Table 4.2. The source distribution amounted to 1.45 mc/sq ft on the roof and 0.37 mc/sq ft on the ground, the 1.6-curie Co^{60} source being used in the tubing. Station K was in the utility room on the 4-in. concrete-slab floor.

4.3 HOUSE D_1

This house was a typical Oak Ridge type "D" Cemesto house, modified with a partial basement and with the porch enclosed and made part of the house. Figure 4.3 shows the location of dosimeter stations, the layout of tubing, and the slope of the lot. The total area covered by the source tubing was 6500 sq ft, and the 1.6-curie source was pumped back and forth through the full length of tubing; the source distribution was 0.246 mc/sq ft. The total integrated dose due to radiation from the ground and from the roof was therefore measured simultaneously. The effect of sources on the roof alone was measured on another house of the same type at a later time. The normalized data from house D_1 are given in Table 4.3. Station K was in the utility room above a 4-in. concrete-slab floor.

4.4 HOUSE D_2

This was a "D" house similar to house D_1; the protection factors were measured partly as a check on the consistency of the experimental method. There was a slightly different slope of the ground around the house from that around house D_1, as shown in Fig. 4.4. The floor plan was reversed from that of house D_1, one being the mirror image of the other, and the porch was unmodified. Table 4.4 shows the normalized data from this house; the total effect of the ground and roof portion was again measured in one exposure. These data are seen to be comparable to those in Table 4.3 since the dosimeter stations were placed in similar locations. The total area covered was 6500 sq ft, and the source distribution was 0.246 mc/sq ft. The partial basement is shown in dotted outline in part a of Fig. 4.4, and the locations of the dosimeters are indicated in part b.

4.5 HOUSE D_3

The front lawn of this Oak Ridge "D" Cemesto house was approximately level with the 1st floor out to a distance of 15 to 20 ft. The full basement wall was exposed above ground level at the back, and the lawn sloped down uniformly as shown in Fig. 4.5. A comparison was made of the dose rate in the house from radiation sources distributed on the ground at the back half of the house with that from sources distributed at the front half of the house. Part d of Fig. 4.5 shows the layout of the tubing at the back of the house; the layout at the front was similar. The source distribution amounted to 0.42 mc/sq ft on the back and 0.50 mc/sq ft on the front since the area covered in the two cases was slightly different. Table 4.5 gives the normalized dose rates measured at the stations indicated. The 1.6-curie source used in this experiment was insufficient to give appreciable dose readings in the basement in the time available. Therefore, the dose rates in the basement quoted in Table 4.5 can be considered only as rough estimates. More accurate information has been obtained in the basement of house WF_1; the 18-curie source was used in that experiment.

4.6 HOUSE D_4

The fourth "D" type house was chosen to obtain supplementary information concerning doses due to sources distributed on the roof of a house of this type. The tubing was spread on the roof only, with a resultant source concentration of 0.91 mc/sq ft during the run; the dosimeter array was similar to that in house D_2. The dosimeter stations in the basement were

1075314

located as follows: station L at one end of the basement under station A; station O near the center of the basement under station C; station M under the concrete-slab floor of the utility room approximately under station K; station N in the concrete fireplace. Table 4.6 shows the data from this test.

4.7 HOUSE CB

House CB was built with concrete-block walls, a wood-frame roof, and a partial basement, which included an unfinished "fallout shelter" near the center of the house.* The house was chosen for the tests not only as an example of concrete-block construction but also because of its isolation which permitted the use of the 18-curie Co^{60} source. Figure 4.6 shows the floor plan of the house, with the dosimeter stations marked; the basement and fallout shelter; the ground contours; and the layout of the tubing. The projected roof area measured 2600 sq ft, and the total area covered by tubing (ground and roof) was about 7500 sq ft. The total array was run in one exposure; the effective source distribution was 2.4 mc/sq ft. Table 4.7 gives the normalized data from the stations indicated. Station V indicates a vertical traverse of PIC's in the fallout shelter at the location shown. The PIC's were suspended about 6 in. apart on a vertical string.

The magnitude of the factors D_2 and G_2 (of Eq. 2.3) at this house were evaluated by making another exposure on house CB using a single length of tubing placed around the house 16 ft out from the outer walls. Column 2 of Table 4.8 shows the dose rates measured inside the house at a few stations during this exposure. The same length of tubing was then laid out on the flat field in an identical array, and the phantom dose rate was measured 3 ft above the ground at points corresponding to the stations in the house (ground floor only). Column 3 of Table 4.8 shows the measured dose rates for the field exposure.

4.8 HOUSE WF_1

This was a single-story wood-frame house built on a full, open basement with concrete-block walls. The floor at the front of the house was essentially at ground level, and the ground was approximately flat as far as the tubing extended. The ground level at the back, however, was even with the basement floor and sloped down with an even slope as shown in part c of Fig. 4.7. This house was sufficiently far from neighboring houses that the 18-curie source could be used in the pumping system, and the exposure was made to test the differences in the effect of the ground level on the front and back. Two exposures were made, one with the tubing arranged on the front half of the house (as illustrated in part d of Fig. 4.7) and the other with the tubing similarly arrayed at the back. Columns 2 and 3 of Table 4.9 show the data from these two exposures.

Another exposure was made at house WF_1 to estimate the effect of the dose rate on the ground floor from radiation from distant ground sources. A single straight length of tubing (162 ft long) was laid in front of the house at a distance of 47 ft from, and parallel to, the front side; and the dose rate from this source was compared with that from the same length of tubing laid on the flat open field under similar conditions. Columns 2 and 3 of Table 4.10 show these measured dose rates at the stations indicated.

4.9 HOUSE WF_2

This was another isolated wood-frame house for which the protection factor from the ground only was measured. The 18-curie source was used. The ground sloped upward in front of the house and downward behind the house, and an attempt was made to determine the difference in the dose from the front half of area G_1 and the back half of area G_1. Accordingly, the

*The fallout shelter was constructed of standard 12-in. concrete block filled with concrete.

1075315

tubing was laid out on the front half of area G_1 as shown in part c of Fig. 4.8, with a similar array on the back half of area G_1 during a second run. In this case the house dimensions were 24 by 44 ft; the area covered by tubing was 3300 sq ft on each half; and the effective source distribution was 5.45 mc/sq ft during each run. Columns 2 and 3 of Table 4.11 give the data from the stations shown in Fig. 4.8.

4.10 SUMMARY OF HOUSE TYPES AND MEASUREMENTS

Table 4.12 summarizes the various types of houses studied and the measurements made. Figure 4.9 shows the cross section of a typical Cemesto wall and also shows roof construction. Concrete-block and wood-frame houses are standard construction.

TABLE 4.1 — DOSE RATES MEASURED IN HOUSE A*

Station	R (roof portion)	G_1 (ground portion)
	Ground Floor	
A	30	55
B	37	31
C_1	29	7
C_2	35	16
C_3	42	24
D	35	15
E	31	21
F	28	46
G	44	44
H	45	29
I	33	12
J	38	23
K	35	19
	Basement	
L	7	3
M	14	6
N	19	3
Q	12	3
R	13	4
X	12	4

*Normalized to milliroentgens per hour per millicurie per square foot.

1075316

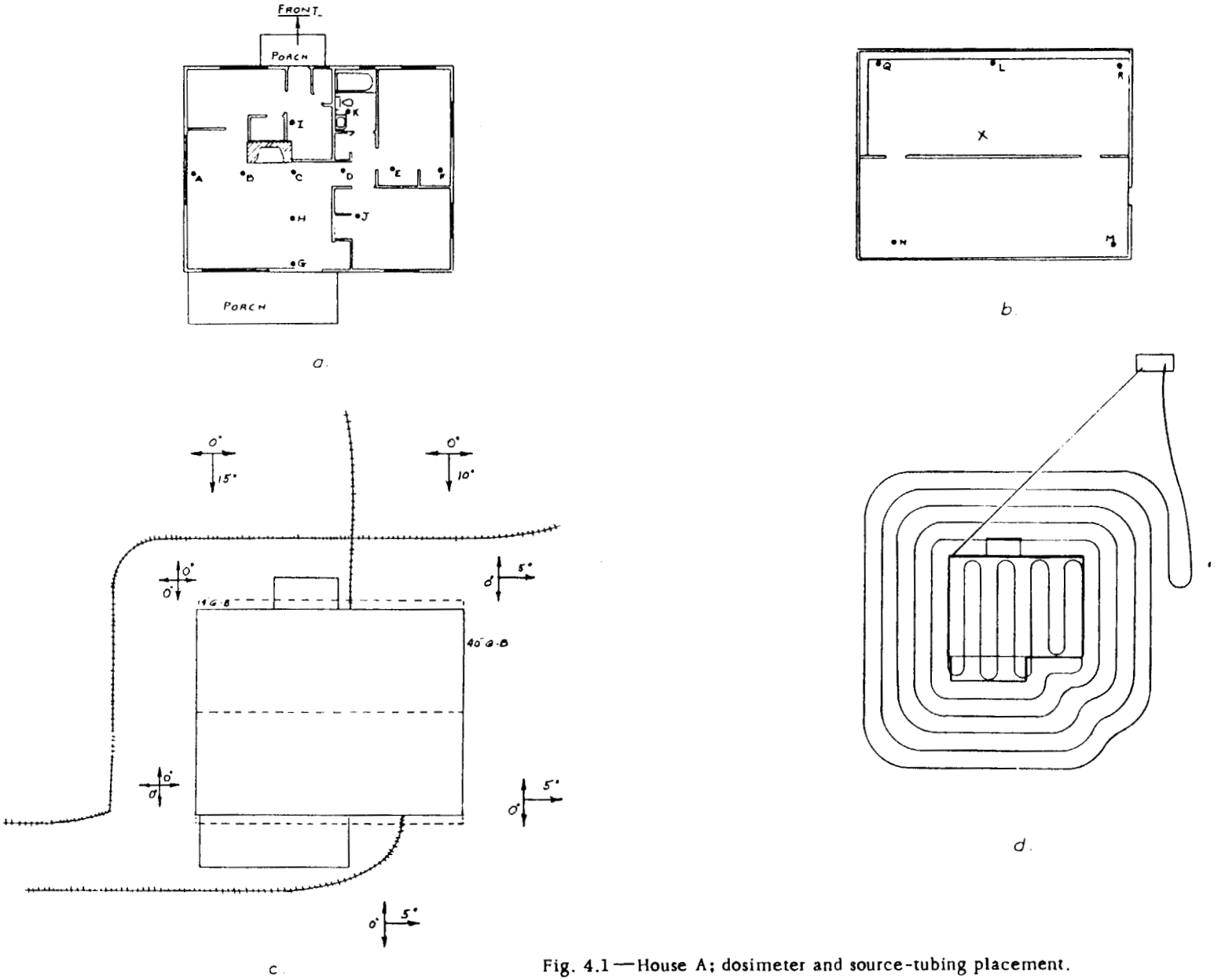

Fig. 4.1—House A; dosimeter and source-tubing placement.

10753117

TABLE 4.2—DOSE RATES MEASURED IN HOUSE B*

Station	R (roof portion)	G_1 (ground portion)
	Ground Floor	
A	34	51
B	38	20
C_1	35	3
C_2	40	9
C_3	47	17
D	44	13
E	42	20
F	36	45
G	52	25
H	29	17
I	43	46
J	57	21
K	27	22
	Crawl Space Under House	
N	17	6

*Normalized to milliroentgens per hour per millicurie per square foot.

1075318

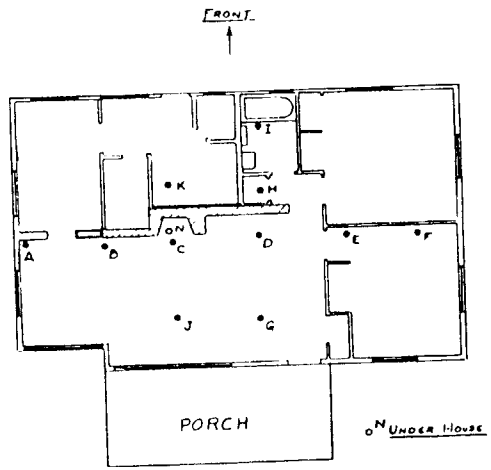

a

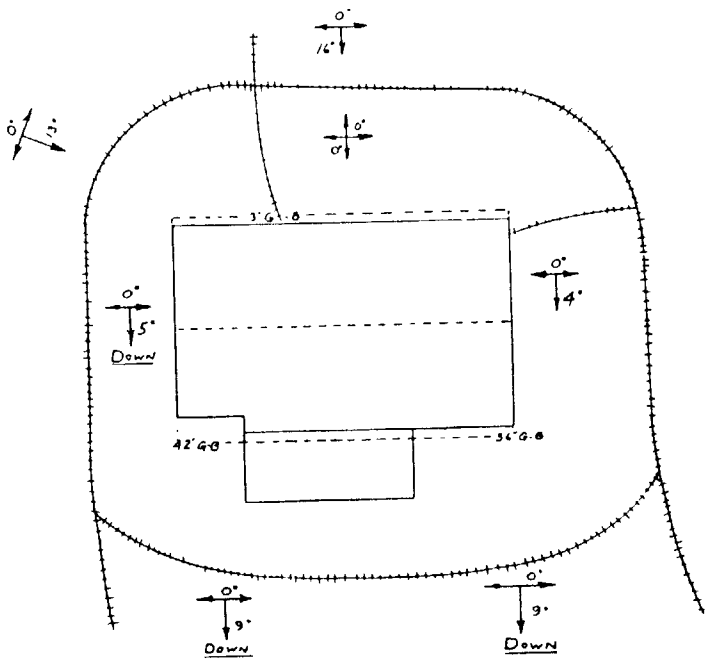

b

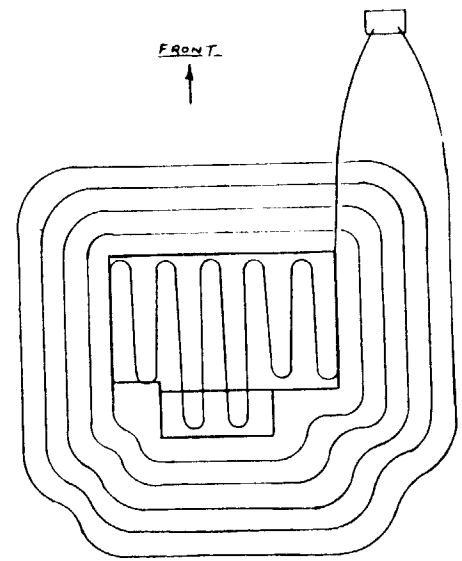

c

Fig. 4.2—House B; dosimeter and source-tubing placement.

1075319

TABLE 4.3—DOSE RATES MEASURED IN HOUSE D_1*

Station	Total dose rate (roof and ground)
Ground Floor	
A	90
B	71
C_1	51
C_2	62
C_3	72
D	72
E	93
F	75
G	90
H	86
I	74
J	89
K	43
Basement	
L	22
M	9
N	29
O	26
P	35
Q	26
R_1	22
R_2	29
R_3	32
S	29

*Normalized to milliroentgens per hour per millicurie per square foot.

1075320

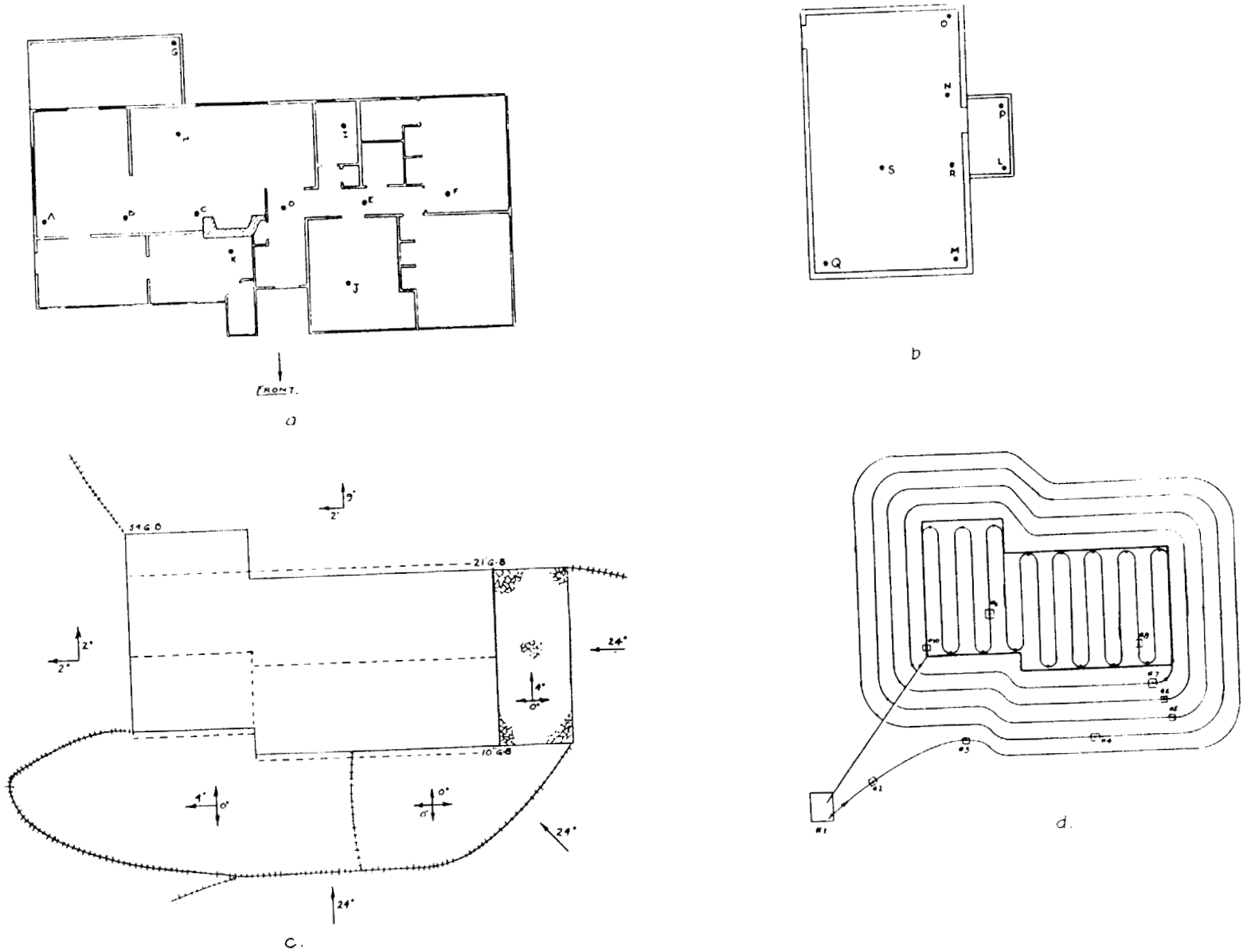

Fig. 4.3—House D_1; dosimeter and source-tubing placement.

1075321

TABLE 4.4—DOSE RATES MEASURED IN HOUSE D_2*

Station	Total dose rate
Ground Floor	
A	100
B	80
C_1	53
C_2	69
C_3	82
D	76
E	67
F	80
G	112
H	98
I	72
J	103
K	50
Basement	
L	30
M	28
O	30
P	30

*Normalized to milliroentgens per hour per millicurie/square foot.

1075322

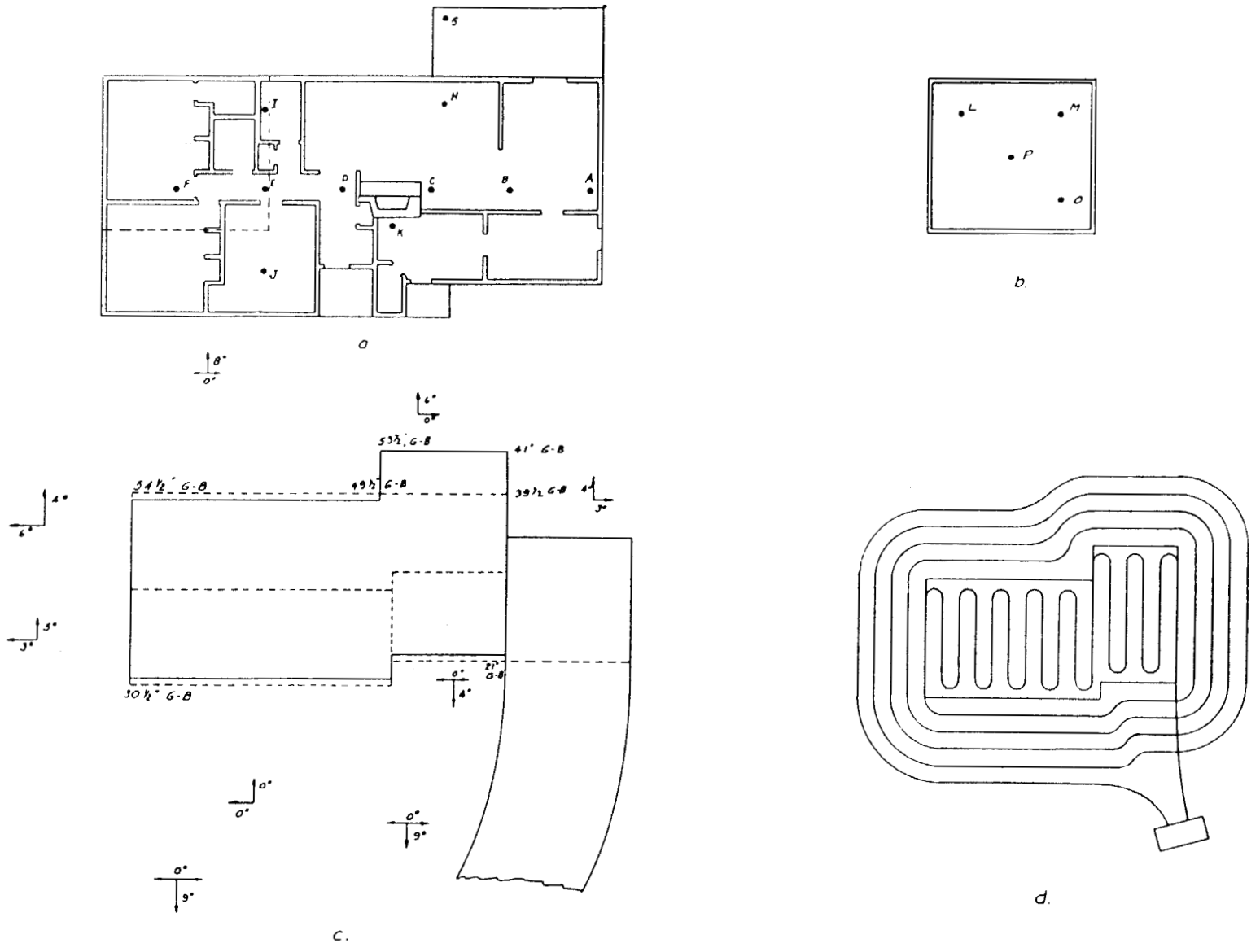

Fig. 4.4—House D_2; dosimeter and source-tubing placement.

1075323

TABLE 4.5—DOSE RATES MEASURED IN HOUSE D_3*

Station	Dose rate from back half	Dose rate from front half
	Ground Floor	
A	31	34
B	12	16
C_1	8	5
C_2	8	11
C_3	8	14
D	10	13
E	12	13
F	12	15
G	54	5
H	23	5
I	21	5
J	0	39
K	0	22
	Basement	
L	3	3
M	2	2
N	3	2
O	6	4
P	3	2
Q	11	2
R	11	1

*Normalized to milliroentgens per hour per millicurie per square foot.

TABLE 4.6—DOSE RATES MEASURED IN HOUSE D_4*

Station	Dose rate from roof only
	Ground Floor
A	38
B	50
C_1	39
C_2	48
C_3	56
D	45
E	44
F	42
G	51
H	60
I	42
J	47
K	35
	Basement
L	20
M	10
N	6
O	23

*Normalized to milliroentgens per hour per millicurie per square foot.

1075324

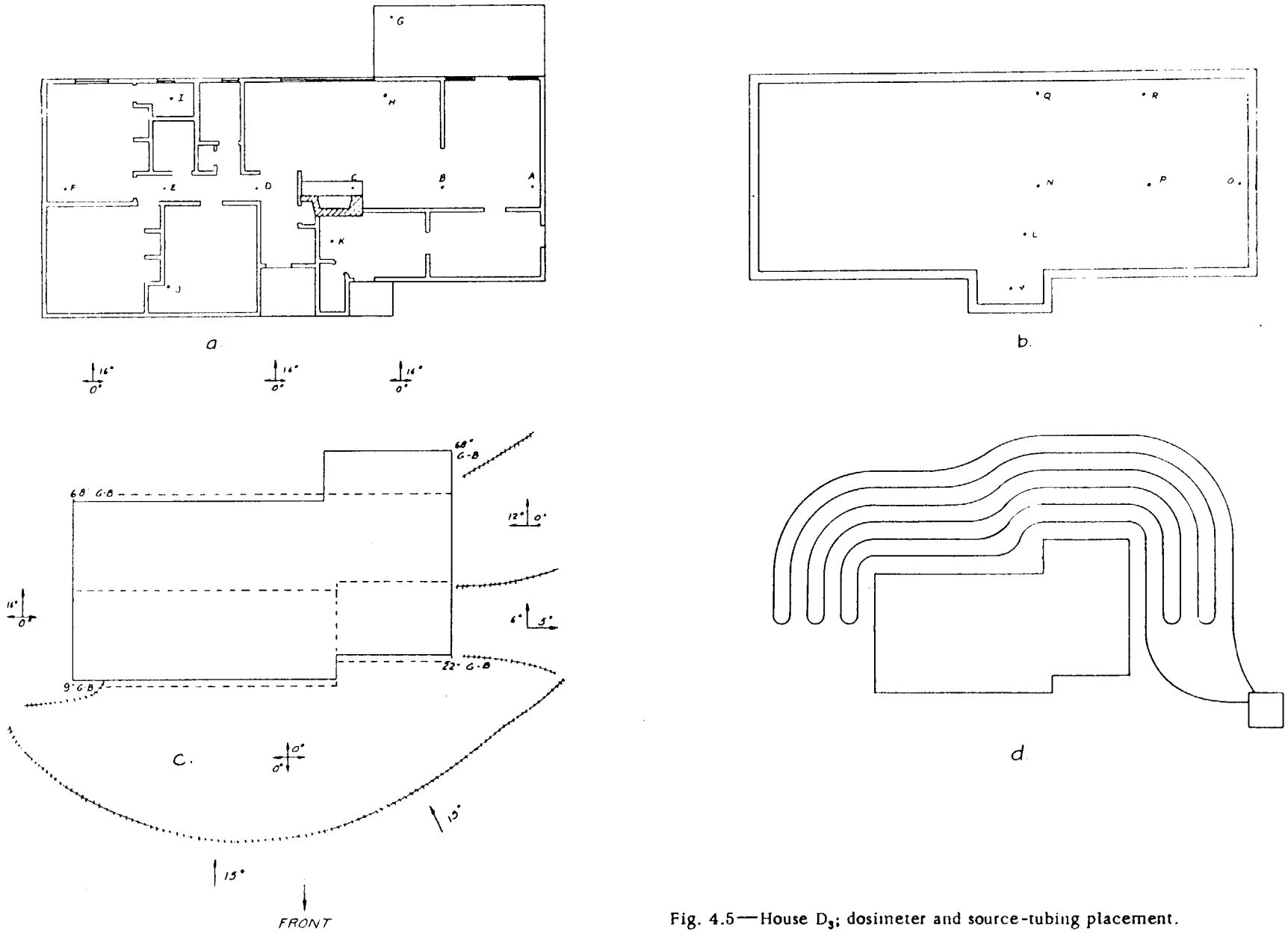

Fig. 4.5—House D_3; dosimeter and source-tubing placement.

1075325

TABLE 4.9—DOSE RATES MEASURED IN HOUSE WF_1*

Station	Dose rate from front half	Dose rate from back half
	Ground Floor	
A	29	23
B	10	8
C	8	7
D	10	9
E	22	29
F	32	4
G	3	17
H	6	12
I	22	3
	Basement	
J	1.3	1.9
K	1.4	2.7
L	1.5	2.2
M	1.4	3.4
N	2.6	3.1
O	1.5	4.2
P	1.5	2.3
Q	2.8	4.6
R	1.4	3.8
V_1	1.9	3.8
V_2	2.3	5.7
V_3	2.3	8.8
V_4	2.8	15
V_5	3.2	12
V_6	4.0	15
V_7	6.2	13

*Normalized to milliroentgens per hour per millicurie per square foot.

TABLE 4.10—DOSE RATES FROM A SINGLE LENGTH OF TUBING IN FRONT OF HOUSE WF_1

	Dose rate, mr/hr	
Station	Inside house	Phantom house
A	25	40
B	20	41
C	20	41
D	19	39
E	25	38
F	41	53

1075326

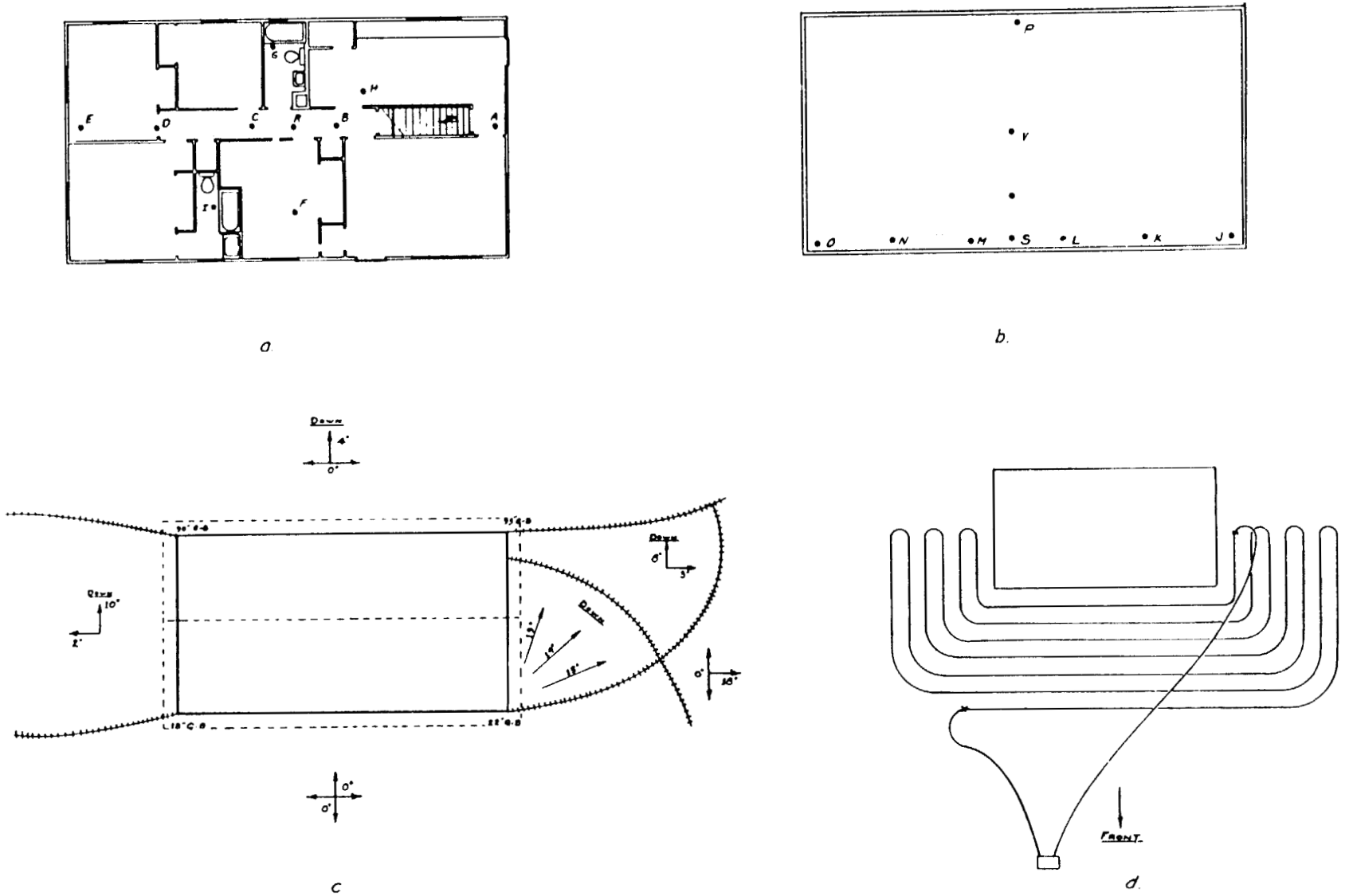

Fig. 4.7—House WF_1; dosimeter and source-tubing placement.

1075327

TABLE 4.11—DOSE RATES MEASURED IN HOUSE WF_2*

Station	Dose rate from front half	Dose rate from back half
	Ground Floor	
A	47	33
B	23	13
C	19	13
D_1	11	4
D_2	17	12
D_3	22	22
E	19	15
F	37	37
G	10	61
H	13	31
I	35	5
J	68	4
	In Basement Dugout (Under Point D)	
K	4	3

*Normalized to milliroentgens per hour per millicurie per square foot.

1075328

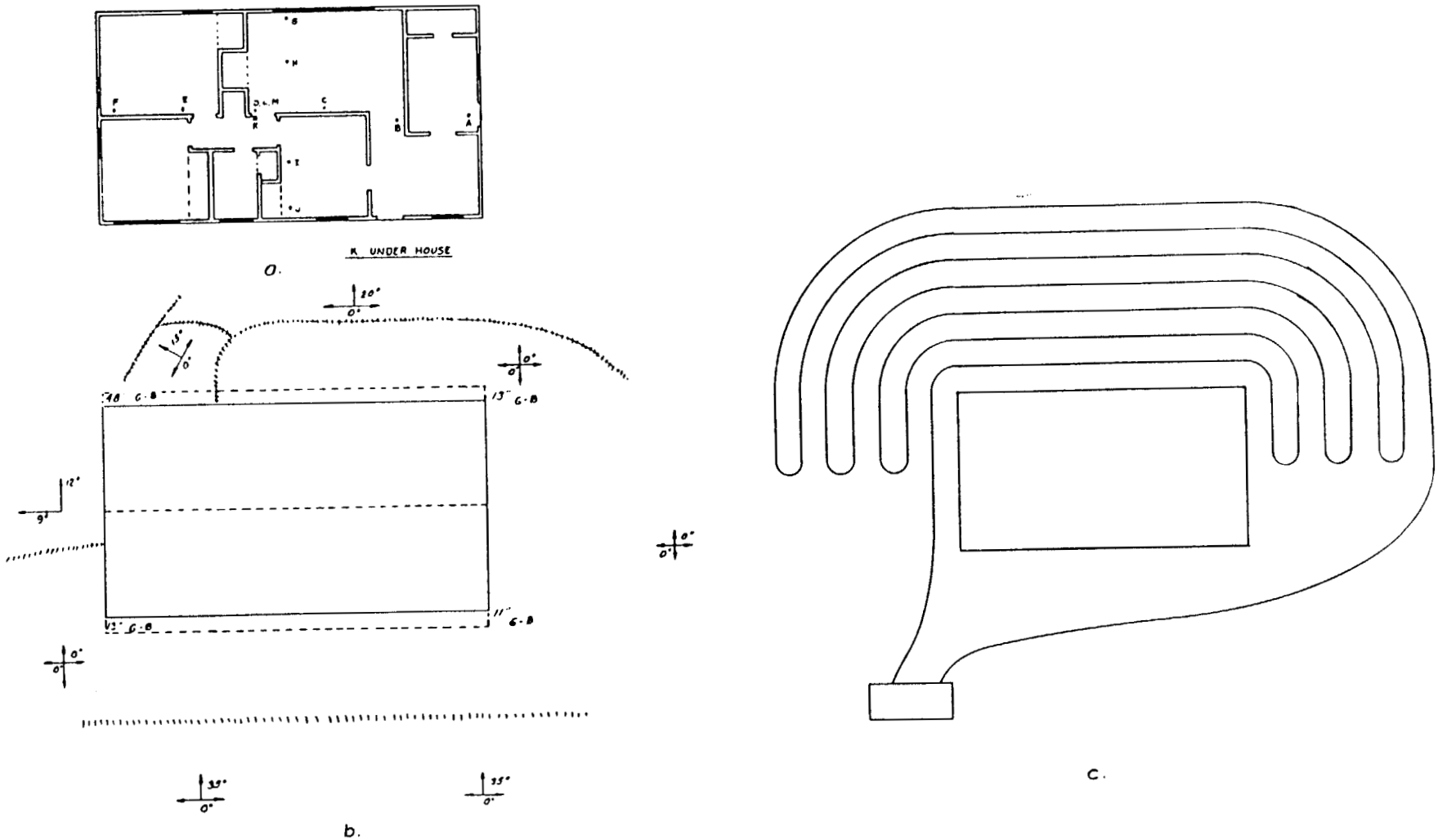

Fig. 4.8—House WF_2; dosimeter and source-tubing placement.

1075329

TABLE 4.12—SUMMARY OF HOUSE TYPES AND MEASUREMENTS

House identification	Type	Measurements	Vertical projection of roof area* including overhang, sq ft
A	Type A Cemesto with wood siding, full basement, carport	Ground and roof	870
B	Type B Cemesto modified only with wood siding on outside, crawl space underneath	Ground and roof	1100
D_1	Typical type D Cemesto modified with partial basement, porch enclosed	Ground and roof	1760
D_2	Type D similar to D_1	Ground and roof	1760
D_3	Type D with full basement	Ground only	1760
D_4	Type D with basement	Roof only	1760
CB	Concrete block, wood-frame roof, partial basement, unfinished fallout shelter	Ground and roof	2600
WF_1	Single story wood frame, full basement	Ground only	1900
WF_2	Same as WF_1	Ground only	1190

*The area in the horizontal plane covered by the house including the roof overhang.

1075330

ROOF

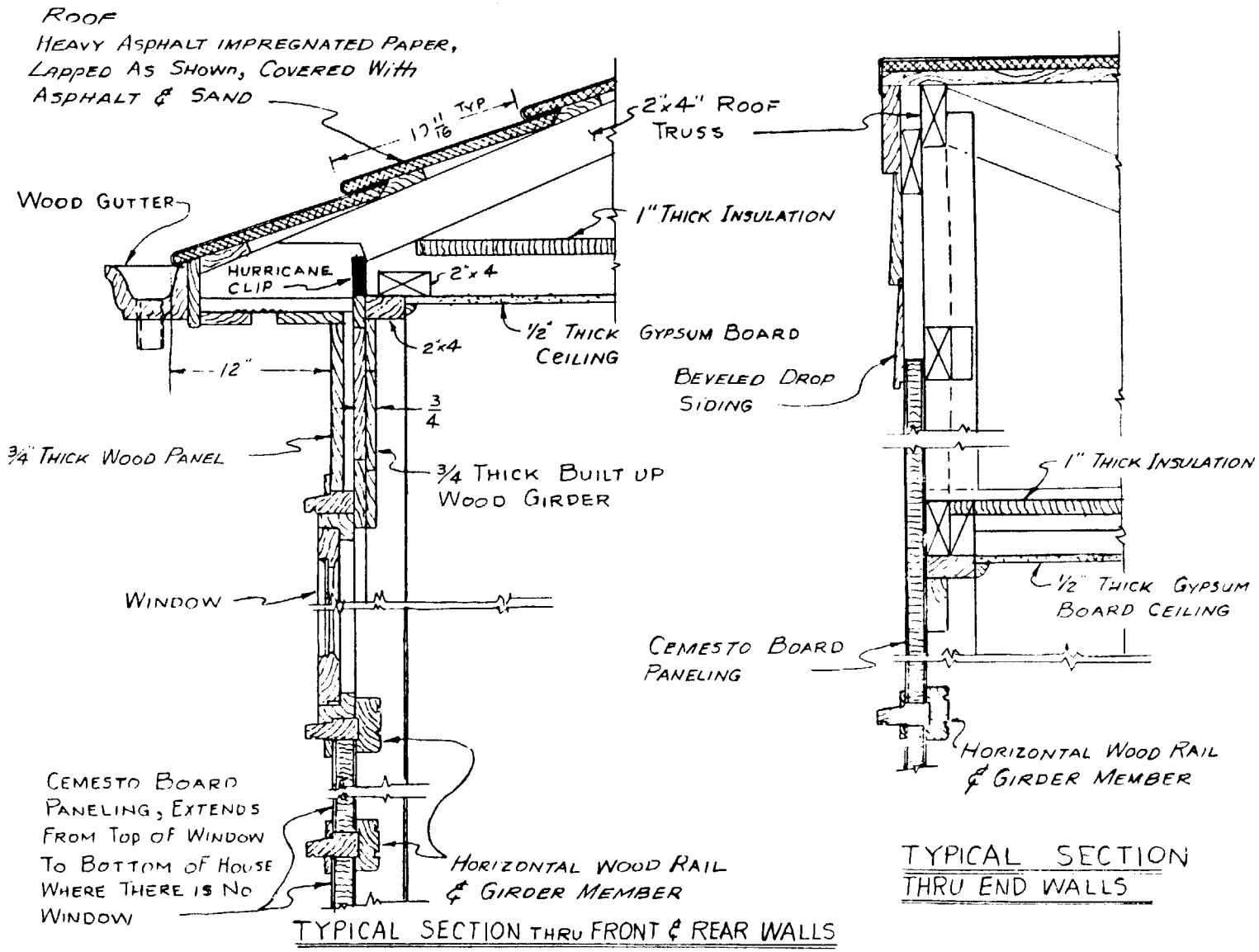

Fig. 4.9—Cross sections of typical Cemesto wall construction.

1075331

Chapter 5

ANALYSIS OF DATA

The dose rate to be expected 3 ft above the center of a flat circular area uniformly contaminated with Co^{60} can be calculated from Eq. 2.5. If C is given the experimentally determined value of 14.4 mr/hr (at 1 ft from a 1-mc point source for h = 3 ft) and S is set equal to 1 mc/sq ft, the result of this integration is the curve shown in Fig. 5.1, where D_1 is plotted as a function of the radius of the circular area r. This calculation can be compared with the experimentally determined values from three phantom measurements made in the open field, using arrays similar to those used on the A, B, and D_1 houses. Assuming the actual array to be a circle of the same total area, the measured dose rates are also shown on Fig. 5.1, marked A for house A, B for house B, and D_1 for house D_1 phantoms, respectively. Since these points are all within 10 per cent of the calculated value, it would seem appropriate to use the calculated values of D_1 in the determination of protection factors from Eqs. 2.3 and 2.4.

The total infinite-plane dose rate at a height of 3 ft is calculated from Eq. 2.6. If C is 14.4 mr/hr, S is 1 mc/sq ft, h is 3 ft, and μ (the absorption coefficient for Co^{60} gamma rays in air) is 0.002 ft^{-1}, this equation integrates to D_0 = 490 (mr/hr)/(mc/sq ft). This is comparable to the value 500 (mr/hr)/(mc/sq ft) estimated by Eisenhauer[1,2] and Hubbell[3] and justifies the use of the build-up factor shown in Eq. 2.6. The dose rate D_2 to be expected from the distant portions of the ground not covered by tubing in the experiment can then be estimated by subtracting the phantom dose rate D_1 from this value of D_0.

5.1 HOUSE A

Column 2 of Table 5.1 shows the approximate protection factor PF′ (neglecting the effect of the radiation from distant ground sources) calculated for the A house from Eq. 2.4. Here the total effective area covered with the tubing (5100 sq ft) is equivalent to a circular area of radius 40.5 ft. The phantom dose rate D_1 is found from the curve in Fig. 5.1 to be 235 (mr/hr)/(mc/sq ft). Dividing this by the sum of the measured dose rates in the house from the ground and roof portions (given in Table 4.1) gives the values in Table 5.1.

A closer estimation of the total protection factor, which would include the effect of the distant ground portion, could be made by the use of Eq. 2.3. In this case the distant phantom dose rate $D_2 = D_0 - D_1$ = 255 (mr/hr)/(mc/sq ft). If the assumption is made that this distant radiation is attenuated by a factor of 2,* then the dose rate G_2 in the house due to this radiation would be approximately 128 (mr/hr)/(mc/sq ft). If these figures are used in Eq. 2.3, the total protection factor PF can be calculated for the ground floor. In the basement, the attenuation of the distant radiation would be more than 2. The order of magnitude of this attenuation might be determined by finding the ratio of the phantom dose at the center of the house from

*Approximate mean attenuation factor for the average Oak Ridge house for primary Co^{60} radiation.

1075332

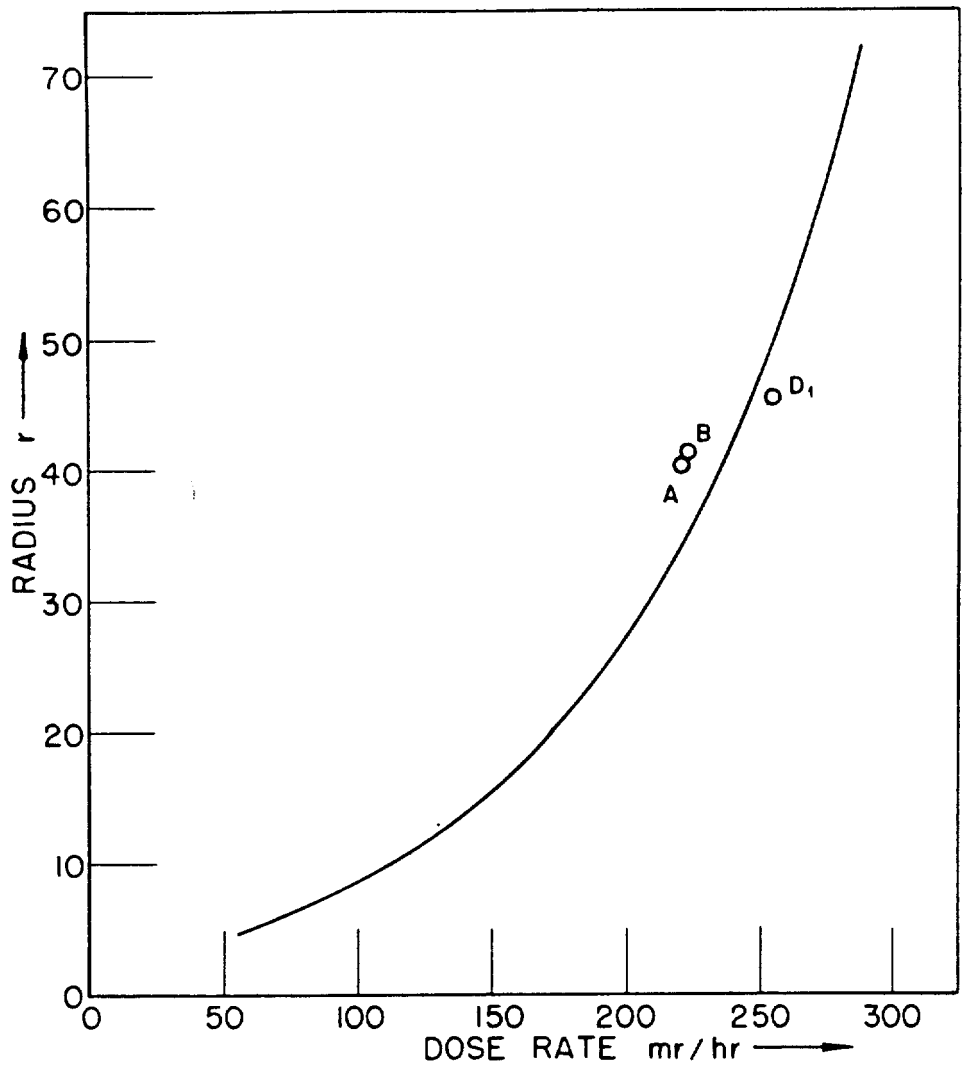

Fig. 5.1 — Exposure dose rate as a function of the radius of a circular contaminated area for 1 mc/sq ft of Co^{60}.

the ground portion of the tubing alone to the dose in the basement from the ground portion alone. The numerator of this fraction can be obtained from Fig. 5.1. The roof area of house A (870 sq ft) is equivalent to a circle of radius $16\frac{1}{2}$ ft, and the expected dose from this area would be 154 (mr/hr)/(mc/sq ft). Subtracting this from the value of D_1 leaves about 80 (mr/hr)/(mc/sq ft) for the ground portion of this dose. The mean dose rate in the basement from column 3 of Table 4.1 is seen to be about 4 (mr/hr)/(mc/sq ft), and the attenuation is, therefore, of the order of 20. If the assumption is then made that the dose rate G_2 in the basement from the distant ground portion is approximately 225/20 = 13 (mr/hr)/(mc/sq ft), then the total protection factor can be calculated for this part also from Eq. 2.3. The total protection factors PF calculated in this way are listed in column 3 of Table 5.1.

5.2 HOUSES B, D_1, AND D_2

The protection factors in houses B, D_1, and D_2 have been calculated in the same way as for house A, and the results are tabulated in Tables 5.2, 5.3, and 5.4, respectively. Shown in the tables are the radius of the equivalent circle corresponding to the total area covered by the

1075333

tubing, the phantom ground dose rate D_1 read from the curve of Fig. 5.1, and the distant phantom dose rate $D_2 = D_0 - D_1$. In each case the distant dose rate was assumed to be attenuated by a factor of 2 for the calculation of G_2. The approximate protection factors PF′ and the total protection factors PF have again been determined separately from Eqs. 2.3 and 2.4, and both are listed in the tables for comparison.

5.3 HOUSES D_3 AND D_4

These houses have been analyzed together since one represents a measurement of the ground dose only (house D_3) and the other, a measurement of the roof dose only on the same type of house. Moreover, the ground dose has been measured for the front and back half separately, and an estimate of the effect of a slope on one-half of the house is possible. Consider a D house with ground levels on front and back similar to that on the front half of house D_1 (approximately flat). The dose rate inside this house can be estimated by using the roof dose from house D_4 and the ground dose from the front half of house D_3 (multiplied by 2). This should give reasonable results for the dose rate on the center line of the house (stations A-F) but not for dosimeter stations G-K. Calculations of the protection factors PF and PF′ using this approach have been made, and the results are shown in Table 5.5. Table 5.6 shows the equivalent results obtained by using the sum of the data from the front and back half of house D_3. These should represent the protection factors for a "D" type house on a lot that is flat in front and sloping at the back, such as house D_3. A comparison of Tables 5.5 and 5.6 would presumably show the effect of a downward slope on one side of the house. The figures given in column 3 of Table 5.6 were calculated from Eq. 2.3 by assuming the radiation from the distant ground portions in front and back to be attenuated by a factor of 2. It seems possible that this distant radiation might be attenuated by more than this in the case of the sloping back half since much of this ground area is shadowed from the house at the back (though not at the sides). Therefore, another calculation of the total protection factor PF was made assuming the back half of the distant ground portion of the radiation to be attenuated by a factor of 3. These results are shown in column 4 of Table 5.6. The protection factors in the basement have not been calculated here since the accuracy of the basement data did not seem to warrant such an analysis.

5.4 HOUSE CB

The analysis of the concrete-block house has been made in the same way as described above. The total area covered by the tubing (7500 sq ft) is equivalent to a circle of radius 49 ft, and, from the curve of Fig. 5.1, the phantom ground dose D_1 = 252 (mr/hr)/(mc/sq ft). The approximate protection factor PF′, which neglects the distant ground radiation, is found by dividing this value of D_1 by the dose rates given in Table 4.7, column 2. The effect of the distant ground sources can be estimated from the data in columns 2 and 3 of Table 4.8. The ratio of the dose rates in these columns is an indication of the attenuation of the radiation from the single length of tubing surrounding the house. This shows an attenuation varying from 3 near the ends of the house to about 5 near the center of the house. Assuming, then, an average attenuation on the first floor of 4 for all radiation from distant ground sources, the total protection factor PF can be evaluated. The attenuation of this radiation in the basement has been estimated from the ratio of the phantom dose rate near the center of the house (column 3, Table 4.8) to that measured in the basement at the specified station (column 2, Table 4.8). These protection factors are all given in Table 5.7.

5.5 HOUSE WF_1

This house was built on a lot approximately flat in front (level with the ground floor) and sloping down at the back (starting at the level of the basement floor). An analysis similar to that on houses D_3 and D_4 was made to check the effect of the low level at the back of the house. The roof area in this case is nearly the same as that of the D type house, and the house D_4 data should give the dose rate from the roof portion within about 5 or 10 per cent.

1075334

The ratios of the dose rates given in column 3 of Table 4.10 to the corresponding dose rates in column 2 represent the attenuation of the radiation from the single length of tubing 47 ft from the side of the house. These ratios vary from 1.5 near the ends of the house to about 2 near the center. This justifies the use of an attenuation factor of 2 in the calculation of the dose from distant ground sources both in this house and in houses A, B, and D as described above.

Assuming first a house similar to house WF_1 situated on a flat lot, the protection factors on the center line of the house can be calculated from the composite data of house D_4 and the front half of house WF_1. These protection factors can then be compared with those calculated for the same type house on a sloping lot (where the basement opens out to ground level at the back) by using house D_4 data and the front and back half data of house WF_1. The protection factors PF and PF′ are given in Table 5.8 for the two situations described. For the first ground data, the distant portion of the ground radiation was assumed to be attenuated by a factor of 2 in the calculation of PF. The attenuation of this radiation in the basement was estimated in a way similar to that described for house D_3 and D_4 calculations. In the case of the house on a flat lot, the distant radiation was assumed to be attenuated by a factor of 15 (buried basement, frame house; see CEX-58.1), but, where the back half of the basement was above ground, the attenuation (of the back half) was assumed to be 4 (concrete block attenuation; see CEX-58.1).

5.6 HOUSE WF_2

The measurements and the analysis of this house were similar to those on the ground floor of house WF_1. However, the results should show the effect of a smaller house and of a lot sloping upward in front of the house and downward behind. The roof data from house B were used in these calculations since the dimensions of house B and house WF_2 were similar. Table 5.9 shows the protection factors inside the house for two situations: (a) the house located as it was on a sloping lot and (b) as would be predicted if the ground at the front and back were both sloping upward (an unlikely situation, but used here merely to illustrate the effect of the different slopes). The protection factors are shown for the stations along the center line only for the latter case.

REFERENCES

1. J. A. Auxier, J. O. Buchanan, C. Eisenhauer, and H. E. Menker, Experimental Evaluation of the Radiation Protection Afforded by Residential Structures Against Distributed Sources, Civil Effects Test Operations, Report CEX-58.1, January 1959.
2. C. E. Eisenhauer, Analysis of Experiments on Light Residential Structures with Distributed Co^{60} Sources, Report NBS-6539, October 1959.
3. J. H. Hubbell, Dose Rate Due to Distributed Gamma-ray Sources, Report NBS-4928, November 1956.

1075335

TABLE 5.1 — PROTECTION FACTORS
IN HOUSE A CALCULATED FROM EQS. 2.3 AND 2.4

r = 40.5 ft
D_1 = 235 (mr/hr)/(mc/sq ft)
D_2 = 255 (mr/hr)/(mc/sq ft)
G_2 = 128 (mr/hr)/(mc/sq ft) (ground floor)
G_2 = 13 (mr/hr)/(mc/sq ft) (basement)
PF = the protection factor based on the measured values for roof and proximal ground sources (G_1) and an attenuation factor of 2 for distant ground sources (G_2)
PF′ = the protection factor based on the measured values for roof and proximal ground sources only

Station	PF′	PF
	Ground Floor	
A	2.8	2.3
B	3.5	2.5
C_1	6.5	3.0
C_2	4.6	2.7
C_3	3.6	2.5
D	4.7	2.8
E	4.6	2.7
F	3.2	2.4
G	2.7	2.3
H	3.2	2.4
I	5.2	2.8
J	3.9	2.6
K	4.3	2.7
	Basement	
L	24	21
M	12	15
N	11	14
Q	15	17
R	14	16
X	14	17

1075336

TABLE 5.2—PROTECTION FACTORS IN HOUSE B

r = 41.5 ft
D_1 = 237 (mr/hr)/(mc/sq ft)
D_2 = 253 (mr/hr)/(mc/sq ft)
G_2 = 127 (mr/hr)/(mc/sq ft)
PF = the protection factor based on the measured values for roof and proximal ground sources (G_1) and an attenuation factor of 2 for distant ground sources (G_2)
PF′ = the protection factor based on the measured values for roof and proximal ground sources only

Station	PF′	PF
	Ground Floor	
A	2.8	2.3
B	4.1	2.7
C_1	6.2	3.0
C_2	4.8	2.8
C_3	3.7	2.6
D	4.2	2.7
E	3.8	2.6
F	2.9	2.4
G	3.1	2.4
H	5.1	2.8
I	2.7	2.3
J	3.0	2.4
	Crawl Space (Under Point C)	
L	10	13

1075337

TABLE 5.3—PROTECTION FACTORS IN HOUSE D_1

r = 45.5 ft
D_1 = 246 (mr/hr)/(mc/sq ft)
D_2 = 244 (mr/hr)/(mc/sq ft)
G_2 = 122 (mr/hr)/(mc/sq ft)
PF = the protection factor based on the measured values for roof and proximal ground sources (G_1) and an attenuation factor of 2 for distant ground sources (G_2)
PF′ = the protection factor based on the measured values for roof and proximal ground sources only

Station	PF′	PF
Ground Floor		
A	2.8	2.3
B	3.5	2.6
C_1	4.8	2.8
C_2	4.0	2.7
C_3	3.4	2.5
D	3.4	2.6
E	2.7	2.3
F	3.3	2.5
G	2.8	2.3
H	2.9	2.4
I	3.4	2.5
J	2.8	2.3
K	5.8	3.0
Basement		
L	11	
M	27	
N	8	
O	9	
P	7	
Q	9	
R_1	11	
R_2	8	
R_3	8	
S	8	

1075338

TABLE 5.4—PROTECTION FACTORS IN HOUSE D_2

r = 46.1 ft
D_1 = 246 (mr/hr)/(mc/sq ft)
D_2 = 244 (mr/hr)/(mc/sq ft)
G_2 = 122 (mr/hr)/(mc/sq ft)
PF = the protection factor based on the measured values for roof and proximal ground sources (G_1) and an attenuation factor of 2 for distant ground sources (G_2)
PF′ = the protection factor based on the measured values for roof and proximal ground sources only

Station	PF′	PF
	Ground Floor	
A	2.5	2.2
B	3.1	2.4
C_1	4.6	2.8
C_2	3.6	2.5
C_3	3.0	2.4
D	3.2	2.5
E	3.7	2.6
F	3.1	2.4
G	2.2	2.1
H	2.5	2.2
I	3.4	2.5
J	2.4	2.2
K	4.9	2.8
	Basement	
L	8	
M	9	
O	8	
P	8	

1075339

TABLE 5.5—PROTECTION FACTORS IN "D" TYPE HOUSE ASSUMING A FLAT LOT

r = 54.5 ft
D_1 = 262 (mr/hr)/(mc/sq ft)
D_2 = 228 (mr/hr)/(mc/sq ft)
G_2 = 114 (mr/hr)/(mc/sq ft)
PF = the protection factor based on the measured values for roof and proximal ground sources (G_1) and an attenuation factor of 2 for distant ground sources (G_2)
PF′ = the protection factor based on the measured values for roof and proximal ground sources only

Station	PF′	PF
A	2.3	2.2
B	3.2	2.5
C	3.7	2.7
D	3.7	2.7
E	3.7	2.7
F	3.6	2.6

TABLE 5.6—PROTECTION FACTORS IN HOUSE D ON A SLOPING LOT

r = 53 ft
D_1 = 260 (mr/hr)/(mc/sq ft)
D_2 = 230 (mr/hr)/(mc/sq ft)
G_2 = 115 (mr/hr)/(mc/sq ft) (for PF)
G_2 = 95 (mr/hr)/(mc/sq ft) (for PF*)
PF = the protection factor based on the measured values for roof and proximal ground sources (G_1) and an attenuation factor of 2 for distant ground sources (G_2)
PF′ = the protection factor based on the measured values for roof and proximal ground sources only
PF* = the protection factor based on measured values for roof and proximal ground sources (G_1) and an attenuation factor of 3 for distant ground sources (G_2)

Station	PF′	PF	PF*
A	2.5	2.2	2.5
B	3.3	2.5	2.8
C	3.9	2.7	3.0
D	3.8	2.7	3.0
E	3.8	2.7	3.0
F	3.8	2.7	3.0

1075340

TABLE 5.7 — PROTECTION FACTORS IN HOUSE CB

r = 49 ft
D_1 = 252 (mr/hr)/(mc/sq ft)
D_2 = 238 (mr/hr)/(mc/sq ft)
G_2 = 60 (mr/hr)/(mc/sq ft) (1st floor)
G_2 = 16 (mr/hr)/(mc/sq ft) (basement)
G_2 = 4 (mr/hr)/(mc/sq ft) (fallout shelter)
PF = the protection factor based on the measured values for roof and proximal ground sources (G_1) and an attenuation factor of 4 for distant ground sources (G_2)
PF′ = the protection factor based on the measured values for roof and proximal ground sources only

Station	PF′	PF
	Ground Floor	
A	3.6	3.7
B	3.6	3.7
C	4.4	4.2
D	3.8	3.9
E	4.2	4.1
F	4.8	4.3
G	3.9	3.9
H	4.0	4.0
I	3.8	3.8
J	2.9	3.4
K	4.3	4.2
L	3.2	3.5
	Basement	
M	15	15
N	8	11
O	13	14
P	15	15
	Fallout Shelter	
Q	500	110
R	130	80
S	130	80
V (3 ft)	140	85

1075341

TABLE 5.8—PROTECTION FACTORS IN HOUSE WF_1

Flat lot	Sloping lot†
r = 53.5 ft	r = 51.5 ft
D_1 = 260 (mr/hr)/(mc/sq ft)	D_1 = 257 (mr/hr)/(mc/sq ft)
D_2 = 230 (mr/hr)/(mc/sq ft)	D_2 = 233 (mr/hr)/(mc/sq ft)
G_2 = 115 (mr/hr)/(mc/sq ft) (ground floor)	G_2 = 116 (mr/hr)/(mc/sq ft) (ground floor)
G_2 = 15 (mr/hr)/(mc/sq ft) (basement)	G_2 = 36 (mr/hr)/(mc/sq ft) (basement)

PF = the protection factor based on the measured values for roof and proximal ground sources (G_1) and an attenuation factor of 2 for distant ground sources (G_2)

PF′ = the protection factor based on the measured values for roof and proximal ground sources only

	Flat lot*		Sloping lot†	
Station	PF′	PF	PF′	PF
	Ground Floor			
A	2.7	2.3	2.9	2.4
B	3.8	2.7	3.9	2.7
C	4.3	2.8	4.3	2.8
D	4.1	2.7	4.1	2.7
E	3.0	2.4	2.8	2.4
	Basement			
P	11	13	6	6
Q	10	12	9	8
R	11	13	10	8
V_3	11	12	8	7

*The attenuation factor of 2 applies only to ground-floor points in a house on a flat lot; a factor of 15 was assumed for distant ground sources at points in the basement.

†An attenuation factor of 4 was assumed for distant ground sources at points in the basement of a house with exposed basement walls, i.e., sloping lot.

TABLE 5.9—PROTECTION FACTORS IN HOUSE WF_2

r = 50 ft
D_1 = 254 (mr/hr)/(mc/sq ft)
D_2 = 236 (mr/hr)/(mc/sq ft)
G_2 = 118 (mr/hr)/(mc/sq ft)
PF = the protection factor based on the measured values for roof and proximal ground sources (G_1) and an attenuation factor of 2 for distant ground sources (G_2)
PF′ = the protection factor based on the measured values for roof and proximal ground sources only

	Lot sloped up in front and down behind		Lot sloped up in front and back	
Station	PF′	PF	PF′	PF
A	2.2	2.1	2.0	2.0
B	3.4	2.6	3.0	2.4
C	3.5	2.6	3.3	2.5
D	3.5	2.6	3.3	2.5
E	3.3	2.5	3.2	2.5
F	2.3	2.1	2.3	2.1

1075342

Chapter 6

COMMENTS AND DISCUSSION

It is difficult to predict or to measure the absolute value of the total protection factor in any particular situation, and the values quoted here can only be taken to represent approximations accurate to within a factor of 2. More meaning can probably be attached to the differences in the protection factors at various points and to the ratios of the protection factors in the basements to those on the first floors. The radiation from the distant ground areas around each house undoubtedly affect the value of the protection factor to a considerable extent, and the measurements listed under PF′ are probably high (except possibly in the basements). However, since the calculations of PF assumed an infinite, flat, open plane all around the house and since most of the Oak Ridge homes were situated on hillside lots with other houses nearby, much of this distant ground radiation would not reach the house. The actual protection factor is probably somewhere between the two values quoted for PF and PF′.

The total protection factors PF on the first floor of the cemesto and wood-frame houses are seen to lie consistently between 2 and 3, with the higher readings measured near the centers of the houses, especially near fireplaces, utility rooms, bathrooms, and above concrete-slab floors. Also, these protection factors seem to be affected less than 10 per cent by the slope of the lot, even when the distant ground radiation is assumed to be attenuated by a factor of 3 instead of 2 at the back (in the case of a down-sloping lot).

The protection factors measured in the basements vary from 5 to 25. No basement was measured which did not have at least part of one wall and some windows exposed above ground level, and presumably most of the radiation dose was from the roof and from this exposed portion. From the results of the calculations on house WF_1, it would appear that the protection factor (in the basement) is decreased by a factor of 2 when one-half the basement is exposed above ground. Many of the basements found in the Oak Ridge area are of this type.

These protection factors can be compared with measurements made under more controlled conditions in Nevada.[1] They are seen to be higher, in general, than those measured in Nevada for single-story structures. This can be attributed to several factors: (a) the measurements made in Oak Ridge were limited to areas within a distance of about 20 ft from the house; (b) the Oak Ridge houses are generally built on higher foundations, particularly on sides where a downward slope of the land may leave the ground level 4 or 5 ft below the floor level; (c) the Oak Ridge houses were fully furnished. The basement protection factors are generally less than those measured in Nevada. This is attributed to the fact that the Oak Ridge houses are on sloping lots and the basements are partially or totally above ground on at least one side.

REFERENCE

1. J. A. Auxier, J. O. Buchanan, C. Eisenhauer, and H. E. Menker, Experimental Evaluation of the Radiation Protection Afforded by Residential Structures Against Distributed Sources, Civil Effects Test Operations, Report CEX-58.1, January 1959.

66

1075343