LOS ALAMOS SCIENTIFIC LABORATORY
UNIVERSITY OF CALIFORNIA
LOS ALAMOS, NEW MEXICO 87544

OFFICE MEMORANDUM

TO : R. A. Jameson and Distribution DATE: October 26, 1972

712268

FROM : Don Liska

MES-250

SUBJECT: DIGITAL BEAM PROFILE AND ENERGY RANGE CONTROLLER TO ELIMINATE EDGE EFFECTS WITHOUT REQUIRING SPECIAL TABLE MOTION

SYMBOL : MP-9

LASL-AEC-OFFICIAL

Based on collective discussions, a more definitive description of the beam profile and energy range control system can now be made. The most attractive system appears to require the digital actuator described in Ref. 1 but in a modified form as suggested by the following considerations.

Energy Range Controller: To achieve uniform dose in a volume of tissue, the energy of the beam, expressed in terms of depth of the Bragg Peak, as a function of time should follow the sweep shape shown in Fig. 1 (Ref. 2). This condition applies if the Bragg Peak is not attenuated with depth and is very thin so that the dose distribution is as shown as curve (a). The undesired dose is given by the plateau region of the

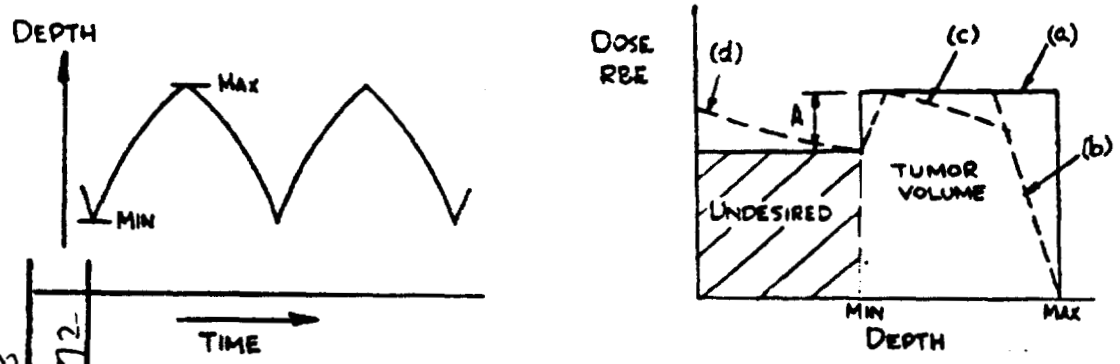

Fig. 1.

Bragg curve and the step size A is a function of the peak to plateau RBE ratio.

Since the Bragg Peak width increases with depth, an "edge-effect" due to vertical oscillation appears (Ref. 3) which becomes large at the 25 cm depth, causing the affect shown by curve (b). Due to peak attenuation with depth, an additional non-uniformity shows up as curve (c). An additional consideration is the undesired dose region which actually has the RBE characteristic shown as curve (d) and which may be decreased in a given volume of healthy tissue by treating from several directions.

REPOSITORY LANL/RC
COLLECTION Dir of Files
BOX No. B-11 D-29
FOLDER MES 200 8/72

FILE BARCODE
00132911

COPIED FOR
HSPT

00132911.001

1075164

An effective way of minimizing the "edge-effect" is to control energy (depth) in a quasi-stepwise manner shown in Fig. 2. To account for the peak attenuation, a combination of the high R and low R (peak to plateau ratio) curves given in Ref. 2 should be used establish the base curve.

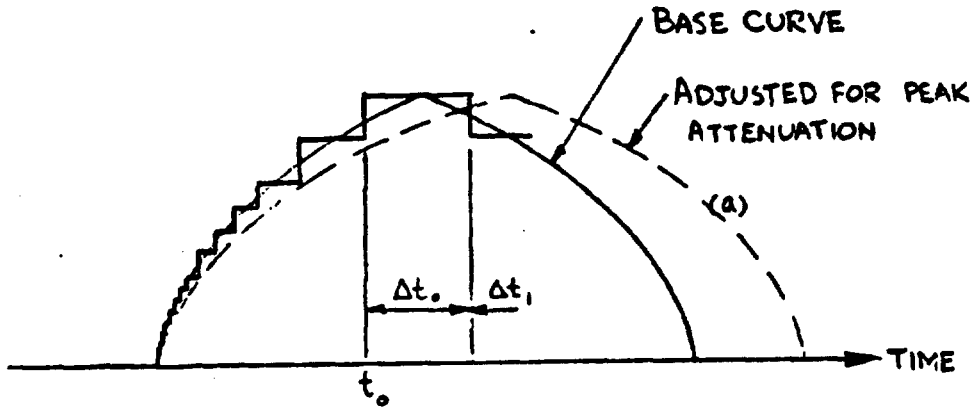

Fig. 2.

How can this be done? A simple method is to use graduated polyethylene (or equivalent material) slabs as shown in Fig. 3, where the graduation is determined by an approximation to the manner in which the Bragg Peak varies with depth. To change the depth of the peak, the

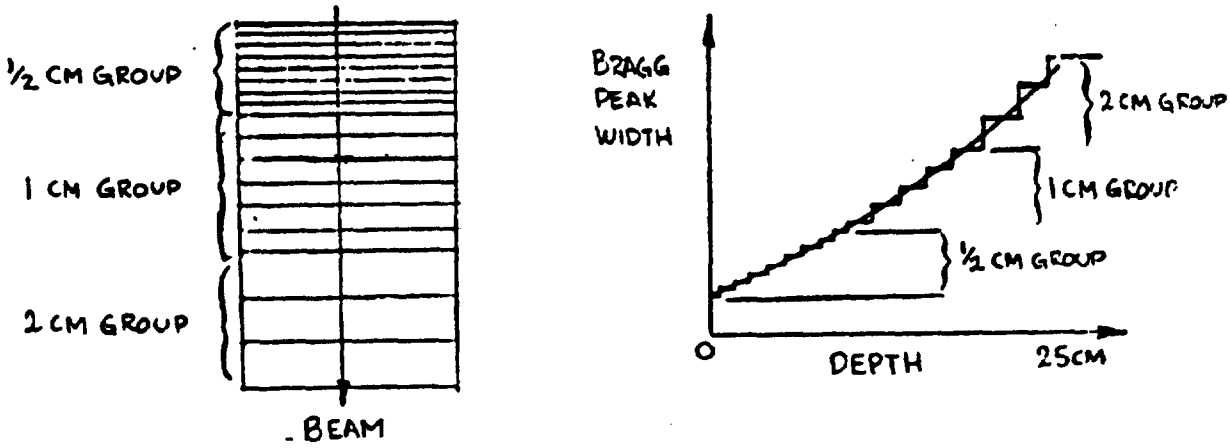

Fig. 3.

appropriate number of slabs are quickly inserted or extracted by powerful hydraulic actuators so that the peak effectively follows the time response of Fig. 2. For example, if the peak is 2-cm wide at the deepest part of the tumor, then enough of the 1/2-cm- and 1-cm-group slabs

COPIED FOR HSPT

00132911.002

1075165

are removed to place the distal (far) side of the peak at the very base of the volume which corresponds to time t_0 of Fig. 2. The peak remains there for period Δt_0, which is determined by the optimized sweep curve. The process continues with diminishing step sizes down to 1/2 cm as shown in Fig. 4. This automatically follows the variation in Bragg Peak width with depth.

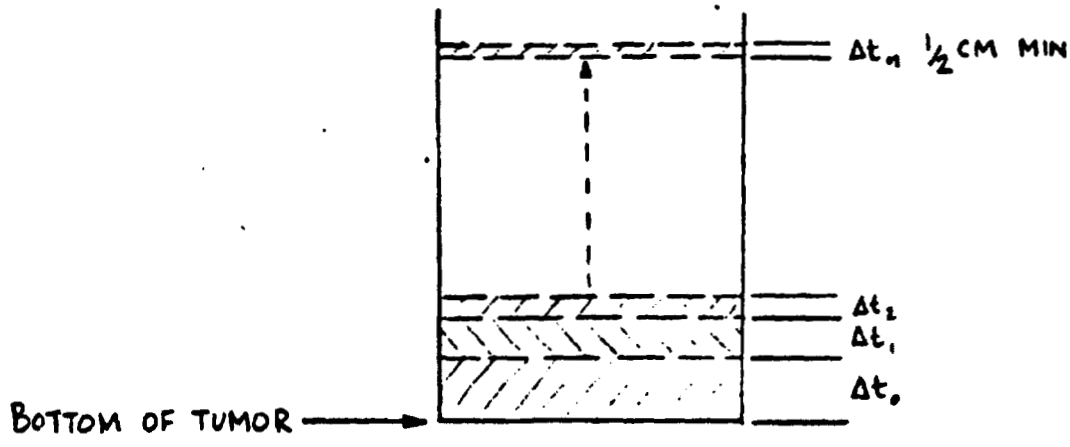

Fig. 4.

Obviously any combination of step sizes of 1/2-cm granularity can be commanded to cover volumes of any size from the surface down to 25 cm. The 1/2-cm width is considered the minimum definable practical width of the Bragg Peak. This method should ideally eliminate the "edge-effect" due to vertical oscillation while a properly chosen base curve for sweeping the energy should reduce the effect of peak attenuation.

All of this occurs during a single sweep of energy range, or several sweeps could be made if this is more desirable. In either case the table on which the patient lies or sits would be stationary so that a 1.5 cm or so vertical slice of tumor equal to the width of the beam in the direction of table motion is treated as shown in Fig. 5.

The table is then incremented ≈ 1.5 cm in the + x-direction to place the treatment volumes edge to edge. This will reduce or essentially eliminated the "edge-effect" due to patient motion since each tumor sectional volume is equally treated.

Beam Profile Control: As the depth of the peak varies in Fig. 5, the treatment length a - a′, which is defined at the Y-position of the Bragg Peak, also varies. The beam can be collimated in length by absorbers inserted in the x-direction as shown in Fig. 5. Choice of absorber motion parallel to table motion is based on the desire to protect regions

COPIED FOR
HSPT

1075166

00132911.003

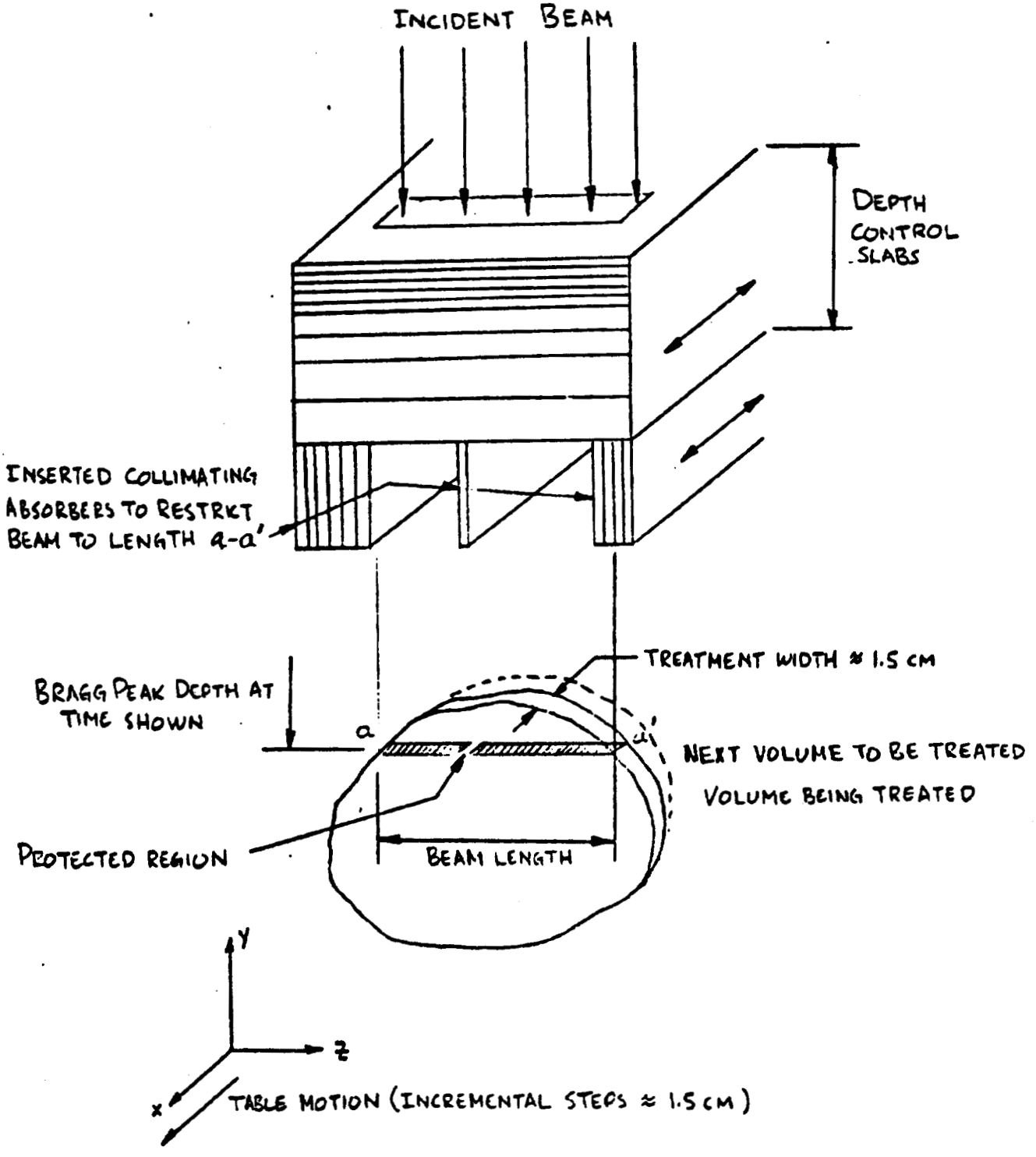

Fig. 5.

COPIED FOR HSPT 00132911.004

1075167

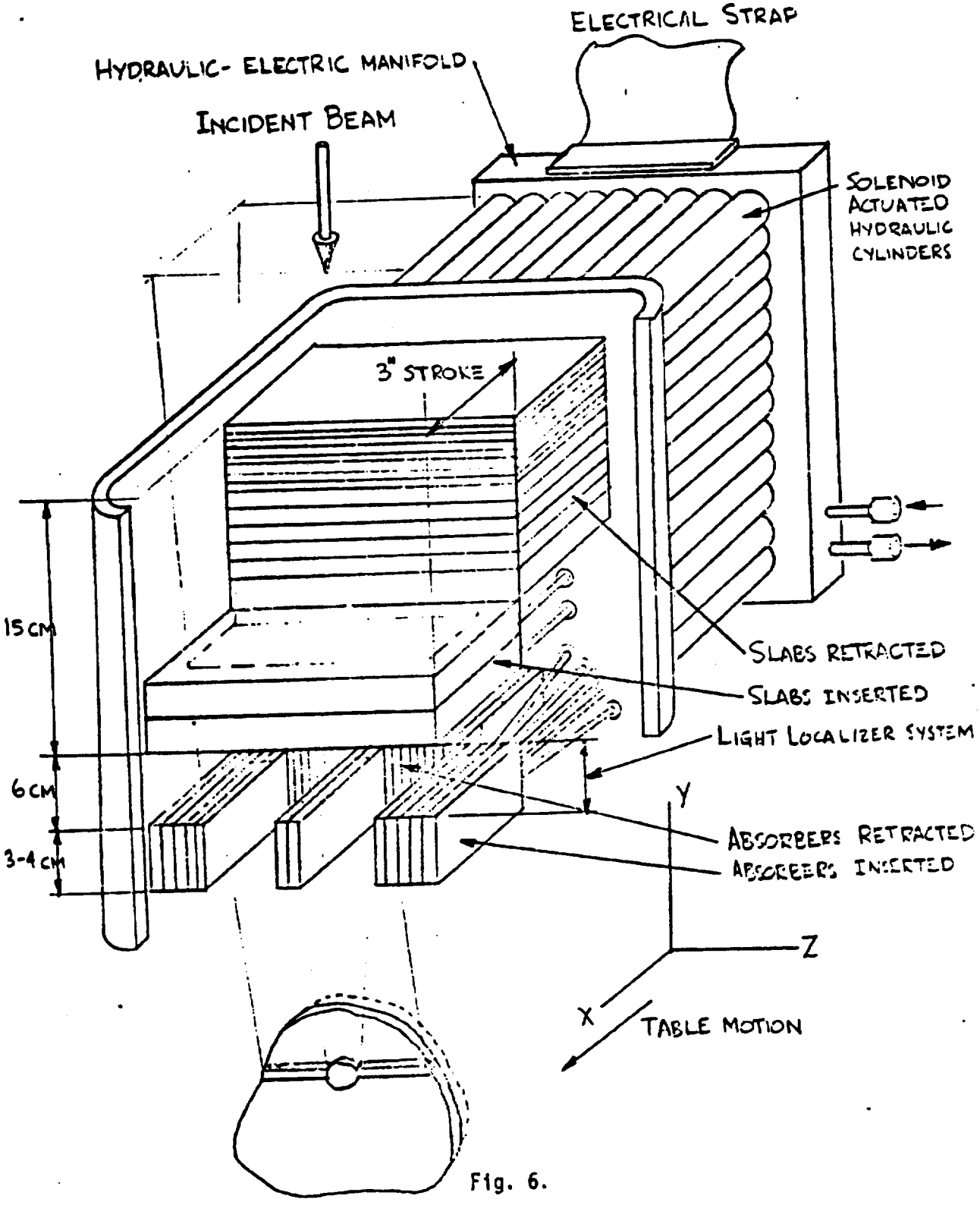

Fig. 6.

LASL-AEC-OFFICIAL

COPIED FOR HSPT
00132911.005

1075168

within the tumor from damage as shown by the single absorber inserted into the beam length. Obviously, while all tissue above the protected area can be treated by this method, regions below are untreated with the slabs inserted. Possibly protection from the peak might be sufficient for high R radiation so that the dose from the plateau could be tolerated. If not, then treatment from the negative Y-direction might be a solution. Fig. 5 points out an additional "edge-effect" due to tumor shape at points a - a which cannot be eliminated with greater precision than the minimum slab thickness, presently 1/2 cm. Compared to the other assumptions inherent in deep-seated therapy of this type, this effect is small.

Digital Actuator: A sketch of the hardware required is shown in more detail in Fig. 6. The relative orientation is as prescribed in Ref. 4 which indicates an available space of 32 cm. I believe the package as described will easily fit in this depth.

Since the beam at the position of the plastic slabs is quite a bit wider than in the tumor due to an approximately 70-mr divergence, the stroke being allowed for the slabs and the collimators is 3 in. A hydraulic cylinder of adequate capacity with a built in solenoid to provide this stroke is over 9-in. long. Allowing 6 in. for movement of the slabs and 9 in. for the cylinders, the length of the package in the x-direction will be about 18 in. External connections will be hydraulic fluid, air or oil, to a manifold and leads to the cylinder solenoids. If the collimating slabs are 1/2-cm thick and the beam 15-cm long, 20 cylinders are required to actuate them. If another 15 or so plastic slabs are required for range control, we have an array of 45 or 50 cylinders. This poses packaging problems but good design can solve them. The array size is elementary for the computer to control so is ideal from the controls point of view.

The concept described above is presently being prototyped in model form and a number of hydraulic cylinders with 3-in. strokes are on order. They can be operated with air or oil. This way we can estimate noise levels and choose the mode which is most CA.

Don Liska

Don Liska

DL:mdj

cc: Distribution*
MP-9, File

References: 1. D. J. Liska and J. D. Wallace, "Biomed Pion Energy Control Actuators", Los Alamos Scientific Laboratory, unpublished report, September 1, 1972.

COPIED FOR
HSPT 00132911.006

1075169

2. Don Liska, "Determination of the Optimum Shape of Sweep Curve for the Biomed Energy Absorber to give Uniform Dose with Depth", Los Alamos Scientific Laboratory, unpublished report, October 12, 1972.

3. Eric Rogers, "A Suggested Plan for Treatment with the LAMPF Negative Pion Beam", Los Alamos Scientific Laboratory, unpublished report, October 18, 1972.

4. Arvid S. Lundy, "Space Considerations at the End of the Biomedical Channel", Los Alamos Scientific Laboratory, unpublished report, October 10, 1972.

* M. Kligerman, ADRT
E. Barnes, UNM-MS
C. Shonk, UNM-MS
W. Shlaer, UNM-MS
C. Richmond, H-4
D. Petersen, H-4
M. Raju, H-4
C. Richman, H-4
L. Rosen, MP-DO
D. Nagle, MP-DO
D. Hagerman, MP-DO
S. Shlaer, MP-1
C. George, MP-3
E. Bush, MP-8
R. Schauman, MP-8
D. Liska, MP-9
J. Wallace, MP-9
MP-3, Staff Members
MP-3, File

LASL-AEC-OFFICIAL

COPIED FOR
HSPT

1075170

00132911.007