1061300

710076

# APPLICATIONS OF RADIOISOTOPES AND RADIATION IN THE LIFE SCIENCES

FS 46
FS 49
and FS 52

## HEARINGS

BEFORE THE

SUBCOMMITTEE ON
RESEARCH, DEVELOPMENT, AND RADIATION

OF THE

JOINT COMMITTEE ON ATOMIC ENERGY
CONGRESS OF THE UNITED STATES

EIGHTY-SEVENTH CONGRESS

FIRST SESSION

ON

APPLICATIONS OF RADIOISOTOPES AND RADIATION IN THE LIFE SCIENCES

MARCH 27, 28, 29, AND 30, 1961

Printed for the use of the Joint Committee on Atomic Energy

U.S. GOVERNMENT PRINTING OFFICE
WASHINGTON : 1961

66426 O

DOE/HQ

For sale by the Superintendent of Documents, U.S. Government Printing Office
Washington 25, D.C. - Price $1.50

1061301

## JOINT COMMITTEE ON ATOMIC ENERGY

CHET HOLIFIELD, California, *Chairman*
JOHN O. PASTORE, Rhode Island, *Vice Chairman*

MELVIN PRICE, Illinois
WAYNE N. ASPINALL, Colorado
ALBERT THOMAS, Texas
THOMAS G. MORRIS, New Mexico
JAMES E. VAN ZANDT, Pennsylvania
CRAIG HOSMER, California
WILLIAM H. BATES, Massachusetts
JACK WESTLAND, Washington

RICHARD B. RUSSELL, Georgia
CLINTON P. ANDERSON, New Mexico
ALBERT GORE, Tennessee
HENRY M. JACKSON, Washington
BOURKE B. HICKENLOOPER, Iowa
HENRY DWORSHAK, Idaho
GEORGE D. AIKEN, Vermont
WALLACE F. BENNETT, Utah

JAMES T. RAMEY, *Executive Director*

---

### SUBCOMMITTEE ON RESEARCH, DEVELOPMENT, AND RADIATION

MELVIN PRICE, Illinois, *Chairman*

CHET HOLIFIELD, California
JAMES E. VAN ZANDT, Pennsylvania
CRAIG HOSMER, California

JOHN O. PASTORE, Rhode Island
ALBERT GORE, Tennessee
HENRY M. JACKSON, Washington
BOURKE B. HICKENLOOPER, Iowa
GEORGE D. AIKEN, Vermont

KENNETH S. MCALPINE, *Professional Staff Member*
CARET BREWER, *Professional Staff Member*
JAMES L. LIVERMAN, *Technical Adviser*
JOHN F. BONNER, *Technical Adviser*



# CONTENTS

(AN ALPHABETICAL INDEX OF ALL EXHIBITS APPEARS ON P. 505 AS A READY REFERENCE TO SUBJECT MATTER AND IS FOLLOWED BY A SELECTED BIBLIOGRAPHY ON P. 511)


| | Page |
|---|---|
| Hearing dates: | |
| Monday, March 27, 1961 | 1 |
| Tuesday, March 28, 1961 | 147 |
| Wednesday, March 29, 1961 | 277 |
| Thursday, March 30, 1961 | 329 |
| Glossary | v |
| Press release announcing hearings | 2 |
| Outline of topics and schedule of witnesses | 3 |
| Introductory statement: | |
| Dunham, Charles L., Director, Division of Biology and Medicine, U.S. Atomic Energy Commission | 4 |
| Statement of— | |
| Andrews, Dr. Frederick N., head, Dairy Department, Purdue University, Lafayette, Ind | 188 |
| Formal statement | 188 |
| Armstrong, Dr. W. D., professor and head, Department of Physiological Chemistry, Medical School, University of Minnesota, Minneapolis, Minn | 9 |
| Benson, Dr. Andrew A., professor, Department of Agricultural and Biological Chemistry, Pennsylvania State University, University Park, Pa | 314 |
| Borkowski, Dr. C. J., Oak Ridge National Laboratory, Oak Ridge, Tenn | 329 |
| Bowen, Dr. Vaughan T., geochemist, Woods Hole Oceanographic Institute, Woods Hole, Mass | 234 |
| Christenson, Mr. Leroy D., Assistant Chief, Fruit and Vegetable Insects Research Branch, Agricultural Research Service, U.S. Department of Agriculture, Beltsville, Md | 169 |
| Formal statement | 169 |
| Dixon, Dr. Frank J., chairman, Department of Pathology, University of Pittsburgh School of Medicine, Pittsburgh, Pa | 295 |
| Fluke, Dr. Donald J., associate professor, Department of Zoology, Duke University, Durham, N.C | 347 |
| Formal statement | 355 |
| Haller, Dr. H. L., Assistant to Administrator, Agricultural Research Service, U.S. Department of Agriculture | 147 |
| Hasterlik, Dr. Robert J., associate director, Argonne Cancer Research Hospital, University of Chicago | 79 |
| Statement for the record on research activities at Argonne Cancer Research Hospital | 113 |
| Lushbaugh, Dr. Clarence C., Biomedical Research Group, Los Alamos Scientific Laboratory, University of California, Los Alamos, N. Mex | 23 |
| Formal statement | 27 |
| Novelli, Dr. G. David, principal biochemist, Biology Division, Oak Ridge National Laboratory, Oak Ridge, Tenn | 277 |
| Formal statement | 284 |
| Olsen, Dr. Sterling R., soil scientist, Agricultural Research Service, U.S. Department of Agriculture | 160 |
| Seymour, Dr. Allyn, associate director, Laboratory of Radiation Biology, University of Washington | 266 |
| Shapiro, Dr. Seymour, biology department, Brookhaven National Laboratory, Upton, Long Island, N.Y | 195 |
| Formal statement | 224 |
| Taylor, Dr. J. Herbert, professor of cell biology, Department of Botany, Columbia University, New York, N.Y | 304 |
| Formal statement | 311 |


DOE/HQ

(10) Porter, K. A., and Caine, R. Y., "Origin of the Infiltrating Cells in Kidney Homografts." Transplantation Bulletin 26: 458, 1960.
(11) Dammin, G. J.: "The Kidney as a Homograft and Its Host." University of Michigan Med. Bull. 26: 278–283, 1960.

---

## Role of a Nuclear Reactor in Medical Research and Therapy—Short-Lived Isotopes, Activation Analysis, Neutron Therapy, and Neutron Capture Therapy

(By Lee E. Farr,* M.D., Brookhaven National Laboratory, Upton, N.Y.)

It is a great privilege for me to bring before this committee a statement on the role of a nuclear reactor in medical research and therapy. Since the inception of the Medical Department at the Brookhaven National Laboratory in 1948 I have had a personal, deep, and continuous interest in this subject. As has been suggested to me, four types of activities will be covered, namely: neutron capture therapy, neutron therapy, activation analysis and short-lived radioisotopes. This factual recount is presented in historical sequence developing both the accomplishments and the attending difficulties and problems that must be solved in entering into a new and difficult field of scientific exploration. Much of the material to be cited comes from research carried on at Brookhaven, but where related studies have been carried out elsewhere they are noted. In this respect it is a pleasure subsequently to quote Dr. William Sweet concerning the investigations that he and his colleagues have had underway during the past year at the Massachusetts Institute of Technology utilizing a reactor. The assistance of my senior colleagues in preparing this report is appreciated.

At the time of the discovery of the neutron by Chadwick, roentgen rays had been in use in medicine as a diagnostic and therapeutic tool since shortly after their discovery some 37 years previously. Many of the biological effects of ionizing radiations, not only of roentgen rays but also of the radiation from radium and other radioactive elements, were therefore known, and it was logical to look immediately for uses in medicine of the new particles of matter. However, the difficulty of obtaining neutrons in sufficient abundance to produce cytological effects of therapeutic intensity rendered the applications to medicine a matter of speculation for several years. In 1936 Lawrence and Lawrence; Lawrence, Aebersold, and Lawrence; and Zirkle and Aebersold published articles on the biological effects of fast neutrons produced with a cyclotron. Also in 1936 Locher published an excellent summary of the then-known facts about neutrons which were pertinent to the biological effects and therapeutic possibilities of neutrons. In the light of more recent developments it is of interest to note that Locher was evidently the first to suggest in print that elements with high thermal neutron capture cross sections, such as boron, might have therapeutic uses by virtue of this property (assuming that prompt disintegration follows neutron capture), and that they might be introduced artificially into regions of the body to be irradiated. In 1940 Kruger reported some in vitro experiments on the survival of transplants of mouse sarcoma, mammary carinoma, and lymphoma following irradiation involving the boron 10 thermal capture reaction, and

---

* Brookhaven National Laboratory, Upton, N.Y. Medicine. Born Albuquerque, N. Mex., Oct. 13, 1907; married, 1936; children, 3. B.S., Yale, 1929. M.D., 1933. Intern pediatrician, New Haven Hospital, 1932–33; assistant pediatrician, school of medicine, Yale, 1933–34, assistant in medicine, 1933–34; associate hospital, Rockefeller Institute of Medical Research, New York, 1937–40; director of research and physician-in-chief, Alfred I. du Pont Institute, Delaware, 1940–49; medical director and chairman, Medical Research Center and physician-in-chief, Laboratory Hospital, Brookhaven National Laboratory, 1948– . Visiting associate professor, school of medicine, Pennsylvania, 1940–49; Lipitt lecturer, 1941. Member, National Research Council, 1957– , panel radiobiological committee growth, 1952–55, naval medical research, 1953– , medical and surgical, 1955–56, advanced atomic bomb casualty committee, 1955– , chairman, 1956– , member committee, physiology and biological research, space science board, 1959– ; expert advance panel radiation. (World Health Organization, Geneva, 1957– ; advanced panel medical science, U.S. Department of Defense, 1959– .; medical advisory board, National Nephrosis Foundation, 1959. Johnson award, 1940, Medical College, Resident, 1942– . Captain A.A.; Pediatric Society; Society Clinical Investigation; Society of Experimental Pathology; Society of Experimental Biology; Society of Pediatric Research; Radiation Research Society; Harvey Society; Society of Nuclear Medicine; fellow, American Medical Association; fellow Academy of Pediatrics; fellow, New York Academy of Medical Reactors; neutron capture therapy of cancer; biological effects of neutrons; use of radioactive isotopes in medicine.



concluded that, "neoplastic cells can be destroyed in vivo if sufficient n in some suitable form can be applied to the tumor in vivo." Later the . year Zahl, Cooper and Dunning concluded that a significant increase in tumor regression followed the irradiation of transplantable mouse sarcomas injected with boron or lithium preparations and exposed to a thermal neutron source. These experiments and other studies reported by Zahl and Cooper and later with fission of uranium by Tobias et al., established the possibility of using thermal neutron capture reactions to produce biological effects. Conger and Giles attributed part of the cytogenetic effects of neutron irradiation in plants (trandescantia) to the reaction with the boron normally present. The weak sources of thermal neutrons available before 1950 precluded extension of the applications of thermal neutrons to human beings. The first attempts to use neutrons in the treatment of human disease involved the direct use of fast neutrons, as will be discussed below.

In September 1938 the first patient to be treated with fast neutrons, a man with carcinoma of the upper alveolar ridge, was exposed to the beam of fast neutrons produced by bombarding beryllium with 8 MeV deuterons in a 37-inch cyclotron at Berkeley. Stone, Lawrence, and Aebersold published a preliminary report describing the early results of neutron therapy in this patient and in 3 other patients who received all together a total of 64 treatments. The first patient was given a dose expressed as 180 n. units through a field cm.×10 cm. The n. unit (now obsolete) was defined as the quantity of neutrons required to give a reading of 1 r. on a 100-r. Victoreen dosimeter. For fast neutrons, an n. unit was found to be physically equivalent to about 2.0 to 2.5 r. in terms of energy delivered to tissue. The early clinical effects were comparable to those of about 900 r. of 200 kvp. roentgen rays. The other patients in the first series received exposure doses ranging from 60 n. to 275 n. units. The results with the second series of 226 patients treated with neutrons produced by bombarding beryllium with 16 MeV deuterons from a 60-inch cyclotron during the period from November 1939 to February 1943 were reported later by Stone and Larkin and discussed by Stone (1944). In both of these series the early results were fully encouraging, but in a final summary of the results Stone (1948) reported that the late effects of irradiation with fast neutrons were greater in proportion to the early effects than had been expected from previous experience with the roentgen rays. In other words, the relative biological effectiveness for late effects attributable to fast neutron irradiation was greater by a factor of 2 or more than for acute effects. One of Stone's (1948) conclusions was that, "(Fast) neutron therapy as administered by us has resulted in such bad late sequelae in proportion to the few good results that it should not be continued." The clinical trials of this mode of therapy have not been resumed.

The therapeutic application in man of thermal neutrons awaited the development of the nuclear reactor as a sufficiently prolific source of the large numbers of neutrons required. The therapeutic attempts which have been made with thermal neutrons have involved the introduction of a neutron-capturing material into the tissue to be irradiated, in contrast to reliance on the reactions between neutrons and the normal constituents of the tissues. This procedure has been called neutron capture therapy to distinguish it from other possible modes of exposure to neutrons and to emphasize the use of an added neutron-capturing element.

When the completion of the large graphite research reactor at the Brookhaven National Laboratory was imminent, a collaborative effort between Farr, Robertson, and their colleagues at Brookhaven and W. H. Sweet of the Neurosurgery Department at the Massachusetts General Hospital in Boston was begun. Preliminary work (Sweet and Javid; Javid, Brownell, and Sweet) conducted at Boston indicated that during the first hour after intravenous injection of boren in the form of borax, the concentration of boron was higher by factors of 2 or more in brain tumors than in normal brain, and that it would be feasible to inject sufficient boron to give an expectation of achieving selective radiation effects in brain tumors by the neutron capture reaction.

Partly because of the relatively high incidence and malignancy of glioblastoma multiforme (Pierce and Bouchard), and its refractoriness to treatment surgically and by conventional radiation therapy, and partly because of this tumor's favorable uptake of boron (a feature deemed critical at that time), it was decided to treat only patients with glioblastoma multiforme in the first series.

68428 O—62——29

DOE/HQ

riod of 2 years beginning on February 15, 1951, 10 patients with yed glioblastoma who had been operated upon or examined subsequent to ration by Sweet at the Massachusetts General Hospital were transferred to hospital of the Brookhaven National Laboratory for neutron capture therapy. treatments were conducted at a facility located on the top of the Brookven National Laboratory graphite research reactor. The details of each treatnt and the clinical courses of the patients were described by Farr et al. (1954). e first five patients each received a single neutron treatment with an average e of 20 grams of boron 10 sodium tetraborate decahydrate, providing 19 to mg. of boron 10 per kilogram of body weight. Neutron doses of about $10^{12}$ thermal neutrons/cm² at the skin were delivered over periods of 30 to 40 minutes. The second set of five patients received two to four neutron treatments, each under approximately the same conditions as described for the single exposures.

The longest survival from the first irradiation to death was 186 days. Eight of the first ten patients came to autopsy and the pathological findings were reported by Godwin, Farr, Sweet, and Robertson. Large areas of viable tumor were found in all cases, but in at least three the changes observed in the tumor could be attributed to acute irradiation effects presumably consequential to neutron capture. Only three patients lived long enough for the delayed effects of irradiation, such as demyelinization, to occur and none was found. No persistent changes attributable to boron poisoning were found.

Although the clinical histories of the patients in this first series suggested that neutron capture therapy had a definite clinical effect which could result from temporary arrest of tumor growth, the failure to destroy the tumor made it apparent that a more effective treatment procedure was necessary. Modification of the irradiation facility made it possible to increase the neutron exposure to 3 x $10^{12}$ neutrons/cm² per treatment, and nine patients in a second series of trials were given somewhat higher doses of boron—up to 30 grams of $B^{10}$ sodium tetraborate and ranging from 32 to 42 mg. $B^{10}$ per kilogram of body weight.

Because some of the patients developed severe radiation effects in the skin at the site of their treatment, a number of procedures such as clamping the external carotid arteries, ipsilateral intracarotid injection of the boron during the neutron exposure, and pressure bandages over the scalp were used in attempts to prevent or delay the appearance of boron in the skin. These methods of skin preservation failed and were superseded in the late spring of 1959 by a surgical procedure whereby the skin was reflected away from the irradiation site. Even with these changes, however, the amount of boron injected could not be increased greatly without pharmacological effects of boron which were undesirable. Also, experiments with mice did not show correspondingly increased effectiveness with greater boron doses. There remained a need for higher neutron fluxes than could be attained at the graphite research reactor. This requirement and the operational problems involved in using the large reactor made the construction of the Brookhaven medical research reactor (MRR) advisable. The MRR was designed especially for use in neutron capture therapy and for other possible applications in medical research.

The medical research reactor (MRR) is a heterogeneous, tank-type reactor designed exclusively for medical and biological studies. It is housed in a 60-foot-diameter cylindrical gas-tight steel building connected to the Brookhaven Medical Research Center by air locks. The core contains a clean critical mass of 2.24 kg. $U^{235}$ in 17 fuel elements of standard curve plate design. The MRR operates at power levels up to 3 Mw. and is cooled by the forced circulation of water. The control rod system consists of three $B_4C$ filled safety rods and one stainless steel regulating rod which fit between fuel elements. Nuclear instrumentation includes a safety system which will set back or scram the reactor if two out of three identical channels are tripped. Heat generated in the dry graphite reflector surrounding the reactor vessel is removed by the flow of filtered air.

Experimental facilities include two shielded rooms equipped with special treatment ports and vertical 20-ton shutters. The measured radiation at the treatment port for 1-Mw. power is 2.30 x $10^{10}$ neutrons/cm²-sec (thermal) with an associated gamma flux of 37 r/min. A broad beam experimental area located at the end of a thermal column is used for whole-body irradiation investigations. These facilities, plus three 4-inch horizontal thimbles, two tangential and one radial to the core, make the MRR a versatile research tool.



The core and controls of the medical research reactor were planned to utilize existing technology as far as possible. Its fuel elements and its regulating and safety equipment are built along designs which have been well established in practice. While it is possible for the core vessel to receive other reactor arrangements of somewhat different types, it is not the primary purpose of this Department to investigate reactor core design problems, but rather using a source of this intensity to exploit all available knowledge of the way neutrons can be controlled, modified, and directed for the purposes of medical experimentation. Whether a fixed source such as radium be used, a fission reaction using uranium or a fusion reaction yet to be developed be used for the neutron source, presumably similar conditions of neutron moderation and reflection will permit obtaining medically useful neutrons.

Therefore, for these purposes those features of the reactor lying outside the core and extending to the treatment port have been under constant study and examination that the greatest number of slow neutrons will be delivered when desired while excluding at will fast neutrons and gamma rays. At the same time, in designing that part of the reactor and its structures through which the neutrons pass from the core to the treatment aperture, a high degree of flexibility was provided to allow alteration or modification of the components in the interest of future adjustment of the quality and number of the neutrons delivered. The merit of this flexibility was demonstrated in the first months of the reactor's operation, when a leak in the heavy water tanks of the moderator system forced the temporary replacement of the tanks by graphite. The flexible design permitted this substitution to be made safely and thereby made it possible for the therapeutic investigations to begin without undue delay; adjustment of the exposure conditions compensated for the consequent differences in the radiation output.

The MRR first "went critical" March 15, 1959. Several exploratory treatments were conducted in the spring of 1959, one of which resulted in an unexpected conjunctival lesion of the eye at a point of "emergence" of neutrons. Therefore, the possibility had to be considered that this was due to quantities of neutrons other than thermal in the cloud. For this reason a program of extensive modifications of the reactor moderator and of the cloud-defining aperture were immediately undertaken. During and upon completion of these changes, a study, the most detailed yet completed, was undertaken of the energy spectrum of the emergent neutrons. This effort to keep the procedure at a condition of maximum safety for the patient delayed further clinical trials of neutron capture therapy for about a year. In 1960 a new series of treatments involving the use of 35 mg of $B^{10}$/Kg. of body weight and an entrance neutron exposure of $10^{12}$ n/cm.² was begun. These were planned sequentially that untoward effects, if any, might be observed on one patient before the next was admitted for treatment.

Since the measurement of the components of the neutron cloud, its configuration and uniformity is of major importance to the furthering of this aspect, the considerations and procedures for slow, fast, and intermediate neutron analysis and gamma ray intensity are being given in some detail. The specifications originally set up for the output of the MRR required that it provide exposure factors at least as safe and as clean as those which had been demonstrated during the experimental neutron capture therapy at the Brookhaven Graphite Research Reactor. The design calculations were reinforced by development measurements made with the critical assembly. Hence it was confidently anticipated that these specifications were adequate and would be met or even exceeded when the MRR was completed. Experience subsequently has demonstrated that additional measurement must be made, as has been done, and that efforts to further improve the moderator design must be continued if the levels of fast neutron, intermediate energy neutron and gamma radiation are to be controlled with the certainty desired.

The routine measurement of slow neutron quantity has been based on determining the amount of radioactivity induced in gold foils or wires exposed at the sites of interest during the exposure. Standardization of the counting equipment used for these measurements has been arrived at by comparison with similar foils activated in the sigma (standard) pile maintained at Brookhaven. More than 30 variations of geometry of the shielding, moderating, and reflecting pieces in the neutron path have been tried, and a few more were

DOE/HQ

:tigated during the period when the critical assembly for this reac
operation. Foil measurements in these geometries were done with 11 foils, Au, Co, Cd, Na, S, Cu, $U^{234}$, $U^{238}$, In, Mn, and Dy. Measurements made with these various configurations were invoked in the later selection of the three arrangements which have found extensive application in the experimental program. The sum of all these experiences has now been expressed in the latest design, presently in process of installation. Ancillary calibration has been made through the use of radioactive gold solutions evaluated by the National Bureau of Standards. There has also been some effort toward the absolute determination by beta-gamma coincidence counting of the activated foils.

Another absolute method for neutron flux measurement utilizes the collection of fission particles from a known mass of uranium 234, exposed to the neutrons as a film deposited inside an ionization chamber. In the earlier work here, a $U^{238}$ chamber was paired with a $U^{234}$ chamber to provide ratio measurements contrasting fast and slow neutron populations. Although this method was considered the best and most reliable procedure when applied at the medical treatment port of the original reactor experiments, it has not been possible fully to apply this method at the MRR as yet. When attempts were made to use the instruments previously available, the results were found to be in error due to contamination of the chambers by migration of the uranium coatings. Subsequently this difficulty was corrected and new instruments are now available for testing.

While it can be said that no overt discrepancies between these methods have been seen, it is imperative that each of the several approaches have further intensive development toward their specific application to the dosimetry problems of heutron capture therapy.

Foil activation techniques applied to determine fluxes of fast neutrons in the therapeutic situation require quite long exposure times, in general, since the numbers of fast neutrons are minimal by moderator-reflector design. Both the threshold and the fission characteristics have been utilized to measure fast neutrons. To enhance the accuracy of the measurements, foils of extremely small mass have been employed. However, the needs of the medical research program certainly do not require the inordinate precision provided by this approach; less rigorous measurement are adequate, inasmuch as the higher energy neutron contamination must be kept at a relatively low level. In any case, a full gamut of foil-materials have been developed to be available for this purpose. Only the sulfur foil results are quoted below, however, since the others are still subject to revision with further study.

Fission chambers have also been used for fast neutron estimation principally employing uranium 238 as a chemically-deposited film within a chamber operated as a proportional counter or as an ionization chamber. Instruments of this latter type have been built in a paired arrangement, the alternate detecting volume incorporating uranium 235 to take advantage of its comparable response to neutrons in the low energy region.

Originally, the specifications of the reactor performance factors called for the slow neutrons to exceed the fast by a factor of 10,000. This has not been actually achieved with the configurations studied up to this time, although the newly installed arrangement is expected to achieve the desired discrimination.

A complete energy spectrum characterization of neutrons delivered into the therapy room has not been feasible in a truly practical sense. It is proper that first importance be attached to those neutrons which have energies in the slow or thermal region, and this is a measure that can be well established by virtue of the similarity of the response of gold and of boron to neutrons of this kind. A refinement in this region is the determination of cadmium ratio as an indication of the degree of thermalization provided by the net moderator system. While this is a significant number, it contributes no information about the population of neutrons at higher energies.

A recognized number of importance equal to that of the slow neutron flux is the measure of fast neutrons. For intermediate energy neutrons between thermal and fast there is a minimum of biological experience as to effects. Further, there is no suitable instrumentation to cover this intermediate range adequately. For the higher energies, above 1 million electron volts, perhaps starting just a little lower, fission reactions and thresholds for certain nuclear processes are used, and around them a considerable body of technology has



been built up. In the region extending from the thermal range and ne
hundreds of electron volts it is possible to use spectrometer techn or
analysis of the neutron stream, providing intensive detail which has but little significance for neutron capture therapy although of great interest in the applications of the selective aspects of activation analysis. But there is a broad area lying above, extending from a few hundred to several hundred thousand electron volts, in which there is a desperate lack of significantly useful detection equipment.

When considering the effects in tissue caused by the neutrons alone, without recourse to the addition of foreign substances or neutron capturing target materials, the greatest damage per neutron appears to be inflicted by those with energies of one-tenth to one Mev, those which might be classified as "fractional-Mev neutrons." It is in precisely this precinct where the limitation of instrumental techniques is greatest. Although they do not give information specifically related to neutrons of these energies, tissue-equivalent ionization chambers of appropriate construction do include in their response the contribution of these neutrons to the total dose. It may become possible to develop shielding of filtration schemes to screen out various segments of the spectrum and reach the desired measurement by subtraction. But it is the gross effect of the summation of all contributions to the total response in tissue which is the required answer in this problem. Ideally a biological dosimeter of exactly equivalent response is the only final word possible.

Three methods have been applied in the attempt to determine the gamma ray portion of the radiation dose by direct measurement: (1) ionization chambers of various standard and special types, (2) chemical dosimeters, and (3) glass needle "fluorod" microdosimeters. When appropriate construction materials are used in building the dosimeters, it is hoped that the influence of all radiations other than gamma rays can be eliminated but this is difficult to achieve to an adequate degree in practice. Hence an alternative procedure is to protect the detector from the unwanted radiations (in this case the neutrons) by shielding with a substance such as lithium 6. The gamma ray measurement problem is complicated by the fact that there are really two distinct and important sources of electromagnetic radiation present in the therapy situation. The first of these is the reactor itself which contributes gamma rays both from the nuclear chain reaction in the core as well as other gamma rays generated when neutrons are inadvertently stopped in the shield structures or the channel structures. The second important source is the tissues of the subject under irradiation. In parallel with the usual practice in the X-ray therapy, the gamma ray field present at the point where the subject is to be positioned, the "air dose," can be fairly well determined. This requires only that an ionization chamber of a suitable standard type be placed at the point of interest with a proper surrounding of shielding material to eliminate the neutrons. When the phantom animal to be irradiated is in position, however, the neutrons act upon its constituents to generate prompt gamma radiation in the capture reactions and to build up various radioactivities. It is the summation of all these components of various intensities that has provided the most vexing of problems as yet not solved.

The total dose absorbed or energy delivered into the tissues can be measured by the use of ionization chambers constructed entirely of tissue-equivalent materials. This was done in some early experiments, using such chambers to explore the radiation dose as a function of depth along the axis of the neutron stream. An additional feature of this approach is its adaptability to differential measurements, for example to compare the dose absorbed at a specific site in tissue in the presence of neutron capture target substances with the radiation received from the reaction between the neutrons and the natural tissue alone. It is also possible to determine the contribution of the N (n,p) reaction to the total dose absorbed, by eliminating the nitrogen content of the ionization chamber walls and gas. Since these are purely physical measurements, they can be carried out with a neutron flux much below the level required for therapeutic experiments. Investigations of this kind were performed at the W-15 beam hole of the original Brookhaven Graphite Research Reactor. It is the intended purpose of the instrument beam tube of the MRR to extend this work into the situations which are of interest to the context of the present status of neutron capture therapy.

1067304

DOE/HQ

Th[illegible] additional utility for data of this kind in the general understanding of the way in which neutrons penetrate tissue, whether they originate in the laboratory, powerplant, or bomb.

Before returning to a consideration of the clinical results, it is advisable that the significance of this moderator reflector construction and alteration be further illustrated. The properties of the materials interposed in the neutron path from reactor core tank to treatment site deserve a brief discussion, in order to illustrate their functions to provide background for the series of modifications which have been used. The stated objective is to deliver to the treatment site a quantity of thermal neutron energies, with as few fast neutrons as can be managed, and with as low a contamination of gamma radiation as possible.

To eliminate or markedly reduce the gamma rays, it is necessary to use considerable thickness of dense material. Here bismuth is used; if the situation did not require conservation of the neutrons, lead would be acceptable and at much less expense. It is unfortunate that the cheaper metals, and to some extent also those alloys which are more dense than bismuth, all share a higher proclivity for reaction with neutrons to the detriment of the flux transmitted. The bismuth is always covered with a magnesium coating, as protection from the alpha-ray activity resulting from its exposure to neutrons.

For the neutron moderating function, the suitable elements are hydrogen, beryllium, and carbon, with the deuterium isotope of hydrogen being the best from all angles. Factors of expense, structural requirements, heat removal, safety and convenience in handling the operation of the reactor have all entered into considerations which led to the present design based on a balanced use of ordinary water in the core cooling areas, graphite for the inner moderator and reflector regions, and heavy water in the adjustable moderator sections which lie external to the core itself.

Certain elements defining the periphery of the neutron path are contrived to improve the neutron optics through more efficient reflection and thereby preserve the maximum neutron economy. The principal components are the two-inch slabs of polyethylene which line the open parts of the channel, serving to reflect or redirect the stray neutrons back into the useful stream. There is an unfortunate contribution of gamma rays from these slabs, due to neutron capture in hydrogen; a similar detrimental contribution comes from neutrons reacting in the same way in the larger shielding structures surrounding the treatment position.

In the descriptions of the arrangements of these materials in the neutron delivery path as will be given below (tabular data, pp. 462 and 463), only the major components will be named. There are in addition certain small air gaps, membranes of magnesium and tank walls of aluminum, each with a minor influence on the total picture. The thin metal structures do contribute to the gamma-ray field, however, but it is the purpose of the small section of bismuth which is now located at the very outside surface of the treatment aperture to eliminate this contribution.

At the treatment aperture, a final piece of apparatus is used for the purpose of defining the neutron exposure field to the precise area on patient or animal as defined by the physician or experimenter. For this use there are two principal materials, the isotopes boron 10 and lithium 6. They are applied either in their enriched form, as a metal, or in one of the more usual commercial products as a salt or incorporated in a plastic. They are arranged to protect skin edges and structures such as the eye from slow neutrons and thereby the boron reaction. They are not required to provide gamma ray shielding since the prior structures furnish this protection.

The first six patients treated in the Medical Research Reactor were exposed using the all-graphite moderator system in the neutron's stream. The "permanent" section of the neutron path or channel comprises 10.5 inches of graphite (2.5 inches inside the vessel, adjacent to the core proper, and 8 inches immediately outside the vessel) and 12 inches of bismuth. The components fitted into the remainder of the channel are readily exchangeable but not without considerable labor and appropriate regard for radiation hazards. In this first applied case, the sequence continued with two sections totaling 18 inches of graphite followed by 4 inches of bismuth. A final 2-inch thickness of bismuth was installed in the actual aperture. After the fourth treatment, this was increased to 4 inches. (See fig. 1.)



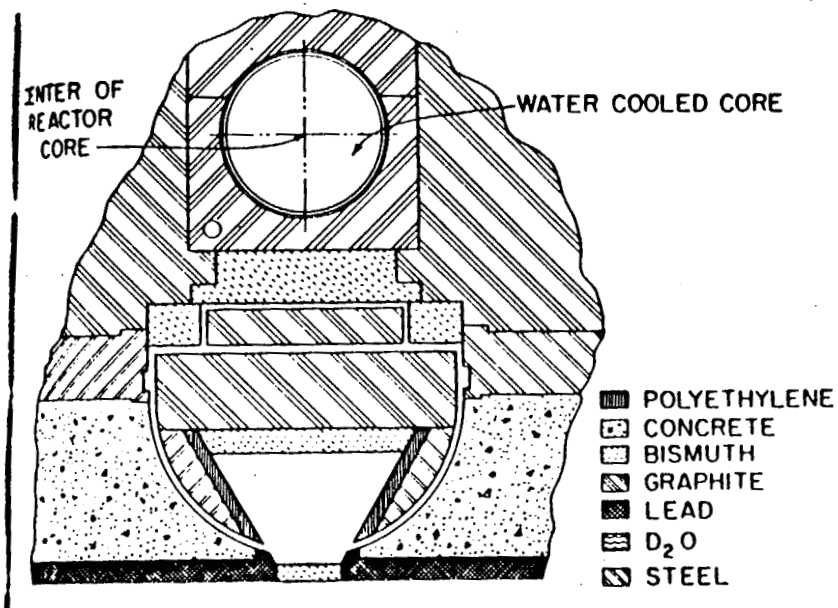


FIGURE 1.—Diagrammatic cross section of the medical reactor, showing the initial configuration of components along the neutron path from the reactor core to the treatment port. Heavy water tanks were not in place.

When the rebuilt heavy water tanks were returned to their place in the neutron channel, the sequence became (starting again from the core proper): 10½ inches graphite, 12 inches bismuth, 6 inches heavy water, 4 inches graphite and [illegible] inches bismuth, the latter being a single slab. (See fig. 2.)

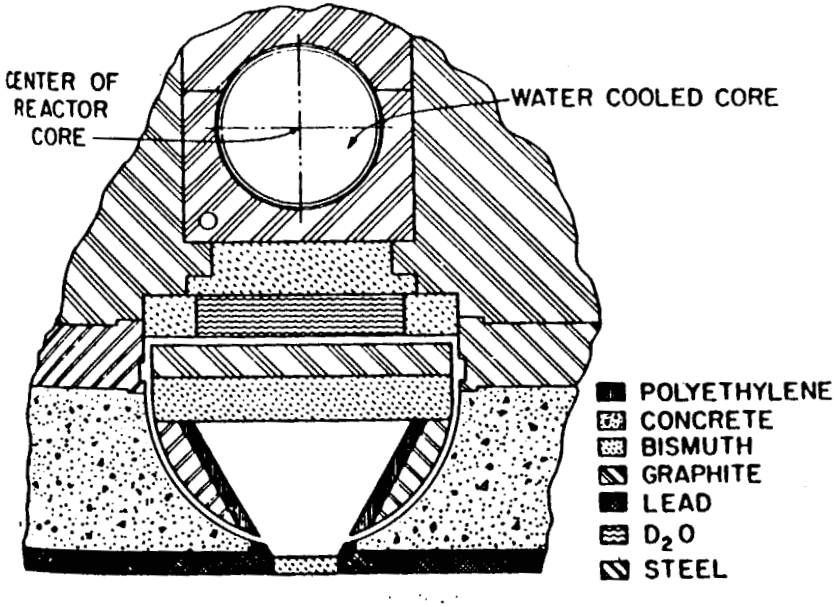


FIGURE 2.—Diagram configuration of reactor to port components with heavy

1061305

DOE/HQ

1067306

les under these conditions indica... be ga...ned and so further modification was car... sequently used in the neutron capture experiments patients, numbering nine. In this change, the configuration 10½ inches graphite, 12 inches bismuth, an air gap of 6 inches, a ta... an 8-inch thickness of heavy water (and extending completely from side to side across the channel), and a final section of bismuth, now a total of 7 inches but divided into approximate halves, one part remaining next to the heavy water tank but the other situated as close to the point of treatment as possible. location was selected to assist in shielding out the gamma radiation from reactions in the shielding or shutter structures upon capture and neutrons. (See fig. 3.)

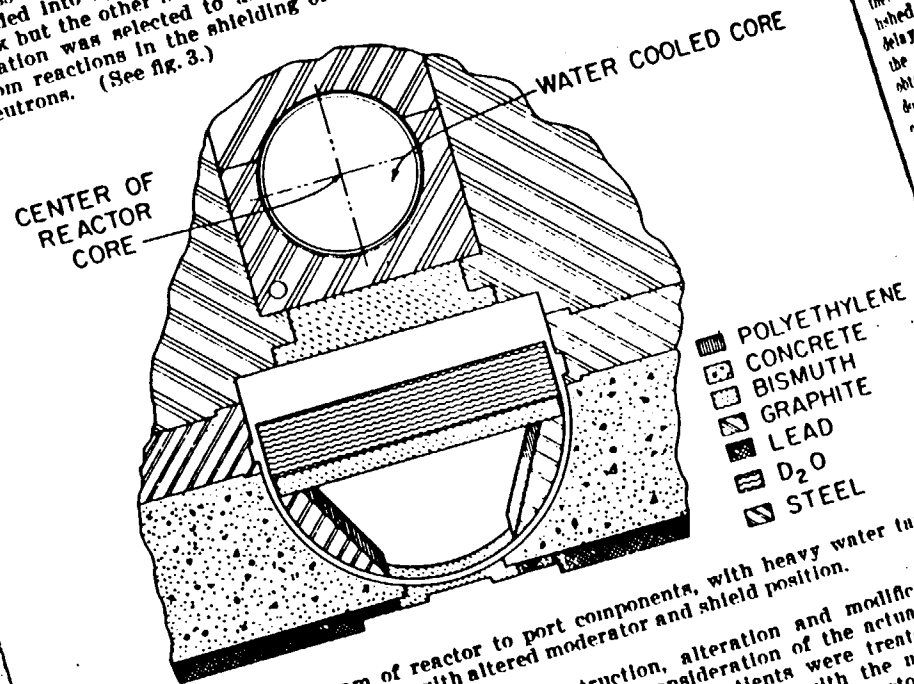


FIGURE 3.—Diagram of reactor to port components, with heavy water tanks in place and with altered moderator and shield position.

With this background of the construction, alteration and modification of the medical research reactor a return to a consideration of the actual clinical accomplishments may be made. A total of 32 patients were treated in the Brookhaven graphite reactor prior to beginning studies with the medical reactor. These treatments were always run at full power of the reactor and were for the various groups of 10-minute to 40-minute duration. The boron 10 dose ranged from 17 to 60 milligrams per kilogram body weight with the great majority of patients receiving 30 or more milligrams per kilogram of body weight. This is a dose which now is known to be adequate since, as will be shown later, a boron dose of 35 milligrams per kilogram body weight is sufficient both in animals and man to produce significant results. Studies are planned to determine how small a dose of inorganic boron salt can be given. At Brookhaven the inorganic salt developed here has always been used since significant effects were obtained with it.

The neutron exposure to the surface of the brain must be estimated on the basis of present knowledge regarding attenuation of the neutron cloud since the measurements were made at the skin surface which was not reflected as is done now. On this basis the total neutron exposure per square centimeter at the brain surface ranged from about $2\times10^{10}$ to $6\times10^{11}$. Again predicting on the basis of what is now known one would expect that the patients receiving the smaller dose would exhibit no morphological changes which could be detected while those receiving the larger dose would exhibit modest but probably definite changes.

In addition to the clinical observations on the experimental procedure of neutron capture therapy, another evaluation of effectiveness has been developed

...ined and at the ... affected by this ... series of cases has bee... 20 cases with primary neo... selected blocks of issue from the ... have been investigated; (2) 20 cases with ... tive purpose by the whole brain technique; (3) ... nique, having no neoplasms (in process now); (4) ... neoplasms treated by neutron capture therapy (studies co... 1 case of primary brain neoplasm administered thermal neutro... these comparative cases, as a standard of reference, criteria have b... lished to help in the recognition of effects, direct and indirect, immediate a... delayed, from any form of irradiation to neoplastic and normal structures in the central nervous system. Several years were required to ... the study, obtain the necessary equipment and train the personnel. Th... ...ow been done and the material is being evaluated microscopically with ... ...owledge of the geometry—something which the usual random small tissue block technique does not permit.

Whole brain sections were prepared from the first 16 treated cases with intracranial gliomas and sarcomas in which the estimated total neutron exposure to the brain surface ranged, as noted above, from $2\times10^{10}$ to $6\times10^{11}$ neutrons per square centimeter and in which the amount of sodium tetraborate as boron 10 ranged from 17 to 50 milligrams per kilogram body weight. In three of the cases with glioblastoma multiforme and one with sarcoma, necrosis of the neoplasm appeared to be present in the immediate region of the radiation port. In the remainder of the cases, no alterations in the neoplasms firmly attributable to neutron capture therapy could be established. No damage to the nonneoplastic central nervous system structures by the irradiation procedure was observed.

Although these first 16 patients which are now in the final stages of evaluation did not in general show any significant morphological changes attributable to the procedure, the 19 patients in the group did exhibit clinical manifestations suggesting in several instances that there may have been temporary arrest or slowing of the tumor growth. Because the patients almost uniformly from the 11th to the 19th developed a skin complication of such severity that the utility of th... procedure was jeopardized, in the next 10 patients major efforts were carried o... to understand the causes of this complication and to devise measures to prev... it. Experimental studies on pigs showed unequivocally that the complica... was due to the neutron boron interaction.

In earlier studies in man vexing skin reactions, as stated before, occurr... the site of irradiation, and a parallel animal experiment was initiated to ... the nature of these lesions and to learn more about tissue response to rad... from thermal neutrons and energetic heavy particles. The pig was selecte... its skin is histologically quite similar to that of man. The histologic fin... the skin of swine exposed to thermal neutrons before and after the int... injection of boron were investigated. In the areas of skin exposed onl... mal neutrons ranging up to $6.3\times10^{12}$ per square centimeter, minimal ... to the maximum exposure was noted within 24 hours. Recovery was ... no further evidence of skin damage was observed grossly. In this st... learned that with boron only, and in pigs receiving thermal neutr... induced histopathological lesions in the skin were seen at the times ranging from 15 to 112 days after neutron exposure or boron a... The microscopic appearance of the skin in these pigs was similar ... control animals which received neither boron nor neutrons. The... alone under these experimental irradiation procedures resulted in ... lesions in the skin of these animals. When boron was administ... followed by exposure to thermal neutrons in the same manner a... to patients a similar extensive skin lesion developed.

From these experiences it was reasoned that if the boron sa... directly by a different route than the intravenous one used t...

DOE/HQ

le to take advantage of a difference in placement time of boron in tumor and ..... and therefore avoid the skin complication. Eleven patients were studied in this context and it was observed that if the neutron exposure was carried out within 10 minutes of a rapid injection of boron salt into the intracarotid artery on the same side as the tumor, subsequent thermal neutron exposure did not result in skin lesions. The thermal neutron exposure to the cortex of the brain as calculated from grid foils in the skin ranged in this series from $7\times10^{9}$ to $2\times10^{10}$ thermal neutrons per square centimeter per treatment. All treatments were carried out within a 10-minute period.

Since at this time studies at Brookhaven on pharmacology and toxicology of inorganic boron salts had brought the studies to a point of confidence in controlling toxic manifestations, particularly with much less toxic sodium pentaborate, so that it seemed that a more extensive series of clinical trials could be undertaken. The possibilities of the new medical research reactor were perhaps too enthusiastically appraised at this juncture immediately prior to its use.

In the fall of 1958 the last two patients to be treated solely in the graphite reactor appeared clinically to respond remarkably well to the procedure, the second of the two surviving a period of 18 months' posttreatment. In May of 1959 after what were believed to be extensive tests of its operating capabilities, the first exploratory patient run was made using the medical research reactor. Fifteen patients have now been treated with the medical research reactor in a total of 16 runs.

Since animal work, later to be described, had by this time given further information regarding the minimum thermal neutron exposure required for definite tumor destruction, it was desirable to maintain exposures of this magnitude in patients if possible. By this time the boron dose had been standardized at 35 milligrams of $B^{10}$ per kilogram of body weight. It seemed clear that an endeavor must be made to determine if, under these conditions, exposure to thermal neutrons might require specific limitation thereby restricting capabilities for tumor destruction at depth in the brain. Therefore, in the runs with the medical research reactor the exposure has been set at a time 25 to 31 minutes after intravenous injection of the boron salt over a 5-minute interval. This was arrived at from extensive experiments on tumor control in mice. The skin flap in man is now reflected since, using this interval following boron injection, skin again becomes susceptible to the reaction. Each succeeding patient was given a larger exposure to thermal neutrons than before and insofar as possible the exposure interval was held constant or diminished by operating the reactor in a semipulsed fashion at increasingly high but demonstrably safe levels in accordance with engineering estimates and authority received.

Some of the animal evidence suggested that effects rise in significance for a short period after boron injection to a maximum 30 minutes after injection, so it seemed desirable to accomplish the neutron exposure in man in a short and fixed interval. The procedure has been to scram the reactor at the treatment conclusion for the last seven patients. Physiologically the significance of this time interval was recognized, but as yet no studies have been developed to indicate the reason for the maximum. As the exposure at the brain and tumor surface was pushed up from $10^{12}$ thermal neutrons per treatment to $10^{14}$, no definite untoward effects were noted in patients. This, therefore, seemed to correspond to the animal data wherein normal animals after receiving boron showed no gross neurological effects with neutron exposures considerably greater. Finally treatment of a 13-year-old girl with a sarcoma of the cerebellum who received a skin surface exposure, resulted in a significant reduction in tumor size from about that of a grapefruit to about an olive, but the tumor remnant was deep in the center of the head. Because the head was small, the patient being a child, and in this instance the directional approach was radically different with a lesser distance from skin surface to midcranial point, the graphite reactor neutron exposures of 2.35, 2.43, and $3.46\times10^{12}$ thermal neutrons per square centimeter over 25 minutes permitted attainment of satisfactory neutron numbers at significant depth. The final exposure in the medical research reactor provided almost twice the thermal neutron intensity at $4.81\times10^{13}$ per square centimeter in only 294 seconds. Observation of this patient provided unequivocal evidence through biopsy study that tumor was indeed destroyed by the procedure. Other details are given in figure 4. Death was from disease complications with meningitis and internal hydrocephalus, and subsequent autopsy established the final location, size, and viability of the tumor.



| DATE AFTER SURGERY | MENTAL STATE | RESPIRATION RATE | SPEECH | MOTOR DISTURBANCE ON EXTREMITIES | OTHER NEUROLOGICAL FINDINGS | GENERAL PHYSICAL AND LABORATORY FINDINGS |
|---|---|---|---|---|---|---|
| 12 MONTHS | INCREASING STUPOR - 2 MONTHS COMPLETE COMA 1-1/2 MONTHS | MARKEDLY DEPRESSED AND IRREGULAR (ARTIFICIAL RESPIRATION) | NONE | NO VOLUNTARY MOVEMENTS MARKED SPASTICITY | BILATERAL MARKED ANKLE CLONUS | UNSTABLE VITAL SIGNS, TUBE FEEDING, BLOOD CARBON DIOXIDE VERY HIGH |
| NEUTRON CAPTURE THERAPY: 1ST N.C.T. (NOVEMBER) TO PARTIAL REGION OF THE TUMOR | | | | | | |
| 13 MONTHS | STUPOR | NORMAL, REGULAR OUT OF RESPIRATOR | NONE | NO VOLUNTARY MOVEMENTS MODERATE SPASTICITY | NO ANKLE CLONUS | STABLE VITAL SIGNS, TUBE FEEDING, BLOOD CARBON DIOXIDE LOWER |
| 15 MONTHS | COMPLETE COMA | MARKEDLY DEPRESSED AND IRREGULAR (ARTIFICIAL RESPIRATION) | NONE | NO VOLUNTARY MOVEMENTS MARKED SPASTICITY | NO ANKLE CLONUS LEFT WRIST CLONUS PRESENT | UNSTABLE VITAL SIGNS, TUBE FEEDING, BLOOD CARBON DIOXIDE INCREASING |
| NEUTRON CAPTURE THERAPY: 2ND N.C.T. (JANUARY) TO SUBOCCIPITAL REGION | | | | | | |
| 17 MONTHS | FULLY CONSCIOUS WELL ORIENTED | NORMAL, REGULAR OUT OF RESPIRATOR | NORMAL WITHOUT DIFFICULTY | VOLUNTARY MOVEMENTS MODERATE SPASTICITY | NO ABNORMAL REFLEXES | STABLE VITAL SIGNS, AMBULATORY, EATING REGULAR MEAL BY MOUTH, BLOOD CARBON DIOXIDE NORMAL |
| 19 MONTHS | STUPOR | SLIGHTLY DEPRESSED BUT REGULAR | UNCLEAR | NO VOLUNTARY MOVEMENTS MARKED SPASTICITY | RIGHT ANKLE CLONUS PRESENT | STABLE VITAL SIGNS, TUBE FEEDING, BLOOD CARBON DIOXIDE NORMAL |
| NEUTRON CAPTURE THERAPY: 3RD N.C.T. (APRIL), SAME PROCEDURE | | | | | | |
| 20 MONTHS | WELL ORIENTED | REGULAR NORMAL | NORMAL | SOME VOLUNTARY MOVEMENTS MODERATE SPASTICITY | NO ABNORMAL REFLEXES | STABLE VITAL SIGNS, EATING REGULAR MEAL BY MOUTH, BLOOD CARBON DIOXIDE NORMAL |
| 21 MONTHS | MENINGITIS 19-1/2 MONTHS THEN COMA AGAIN | MODERATELY DEPRESSED AND IRREGULAR (ARTIFICIAL RESPIRATION) | NONE | NO VOLUNTARY MOVEMENTS MARKED SPASTICITY | BILATERAL ANKLE CLONUS AND BABINSKI'S SIGN | UNSTABLE VITAL SIGNS, ANEMIA WITH SIGNS OF G.I. TRACT BLEEDING, BLOOD CARBON DIOXIDE NORMAL |
| NEUTRON CAPTURE THERAPY: 4TH N.C.T. (JUNE), SAME PROCEDURE | | | | | | |
| 22 MONTHS | SLIGHT IMPROVEMENT THEN MENINGITIS COMA DEATH (JULY) | IMPROVED, THEN DETERIORATED TO MARKEDLY DEPRESSED | NONE | NO CHANGE MARKED SPASTICITY | SAME AS PREVIOUSLY | UNSTABLE VITAL SIGNS: PROGRESSIVE AND SEVERE G.I. TRACT BLEEDING, SEVERE CONJUNCTIVITIS |

FIGURE 4.—Chart summary of course of patient treated by run No. 6, the fourth neutron capture therapy treatment for the patient.

1061301

DOE/HQ

1061308

Subsequent cobalt patient, the eighth in line thereafter, with a metastatic carcinoma received an equivalent thermal neutron exposure, which in his case was 1.1 x $10^{12}$ at the brain surface. His neurological disabilities then clinically improved as noted in figure 5, and subsequently died of generalized carcinoma. The site of origin of the tumor could not be ascertained at the onset of the disease or at the time the metastasis in the brain was observed, but shortly before death it became evident that it arose in the bowel and had spread widely in the abdomen. Preliminary examination of the brain of this patient suggested that the tumor which autopsy showed to be multiple in seeding was destroyed in the brain by the procedure.

Being highly encouraged at this point, treatment was begun with a brain and tumor surface thermal neutron exposure rising modestly in the next four patients to range from 1.5 up to 1.7 x $10^{12}$ per treatment for 150 to 180 seconds. With great dismay it was then found that at the end of 4 days to a week each of these patients developed unexpectedly a condition of irreversible shock, failed to respond to appropriate measures and died. Autopsy findings in the intestinal tract and the physiological findings in the course of these patients suggest the possibility of a midbrain or thalamic lesion which resulted from this modest neutron increase at these levels. Until definitive study of the brain sections has been carried out the answer as to possible mechanism and cause must remain in abeyance. However, it is fortunate that the whole brain study technique had been instituted so that the present specimens are properly prepared for study and comparison with earlier material. The final patient treated in the present series was subjected to only 8.7 x $10^{12}$ thermal neutrons at brain and tumor surface and did not develop such a lesion nor was there significant reduction of the tumor.

Whether the present complication is one inherent in the boron neutron interaction, is the result of a further increment of neutrons in a given higher energy range, is the result of simply incremental radiation exposure to the region or is accurious coincidence cannot be stated today. This clinical finding warrants extreme caution in pursuing the procedure until further elucidation of various factors involved can assist in a meaningful approach to the question.

The complexities of the dosimetric increment aspect can be demonstrated by citation of the present studies on calculation of the radiation dose from gamma rays generated by neutron capture of tissue components.

The numerous difficulties encountered in obtaining and in interpreting physical measurements of the radiation dose at depth in tissue make it important to be able to calculate the depth dose from the more easily obtained external flux and dose measurements. It is also important to have an estimate of the division of the gamma-ray dose into the portion due to external sources and that due to gamma rays generated within the target tissue by neuron capture.

The depth dose figures available in the NBS Handbook 63 are not suitable for the present purposes because of the vast differences between the exposure conditions and the target geometry assumed for the calculations in the handbook, and the conditions and geometry actually used in neutron capture therapy. In particular, the handbook calculations assume a semi-infinite target, whereas the head is small enough to require different geometrical assumptions. Brownell and Sweet (Geneva Conference A/Conf. 15/P/881, 1959) approached this problem by estimating the fraction of gamma-ray energy generated which is absorbed within the volume of interest. The problem in this approach is that it gives only one figure to characterize a continuous distribution of doses.

Our approach to the gamma-ray dose calculation problem begins by taking the measured thermal neutron iso-flux curves as the starting or input data, and from these to calculate the gamma-ray iso-dose curves by taking into account the known or assumed chemical composition of the various tissues involved and the geometry of the volume of interest. This method of calculation is similar to the standard procedures (i.e., Loevinger's chapters in Radiation Dosimetry, Hine and Brownell, eds., Academic Press, New York, N.Y., 1956) used for calculating the gamma dose attributable to uniformly distributed isotopes. Instead of radioactive isotopes being the source of gamma rays, in neutron irradiation what are called prompt gamma rays originate in the (ny) reaction with chlorine-35, which gives a spectrum of gamma rays having a total "Q" value of 8.58 Mev. There are lesser contributions from nitrogen 14, calcium 42, and other tissue constituents. If the neutron flux were uniform throughout the tissue, the dose calculations would follow the standard procedure, but, of course, the principal point of departure is that the neutron flux is far from being uniform, and falls



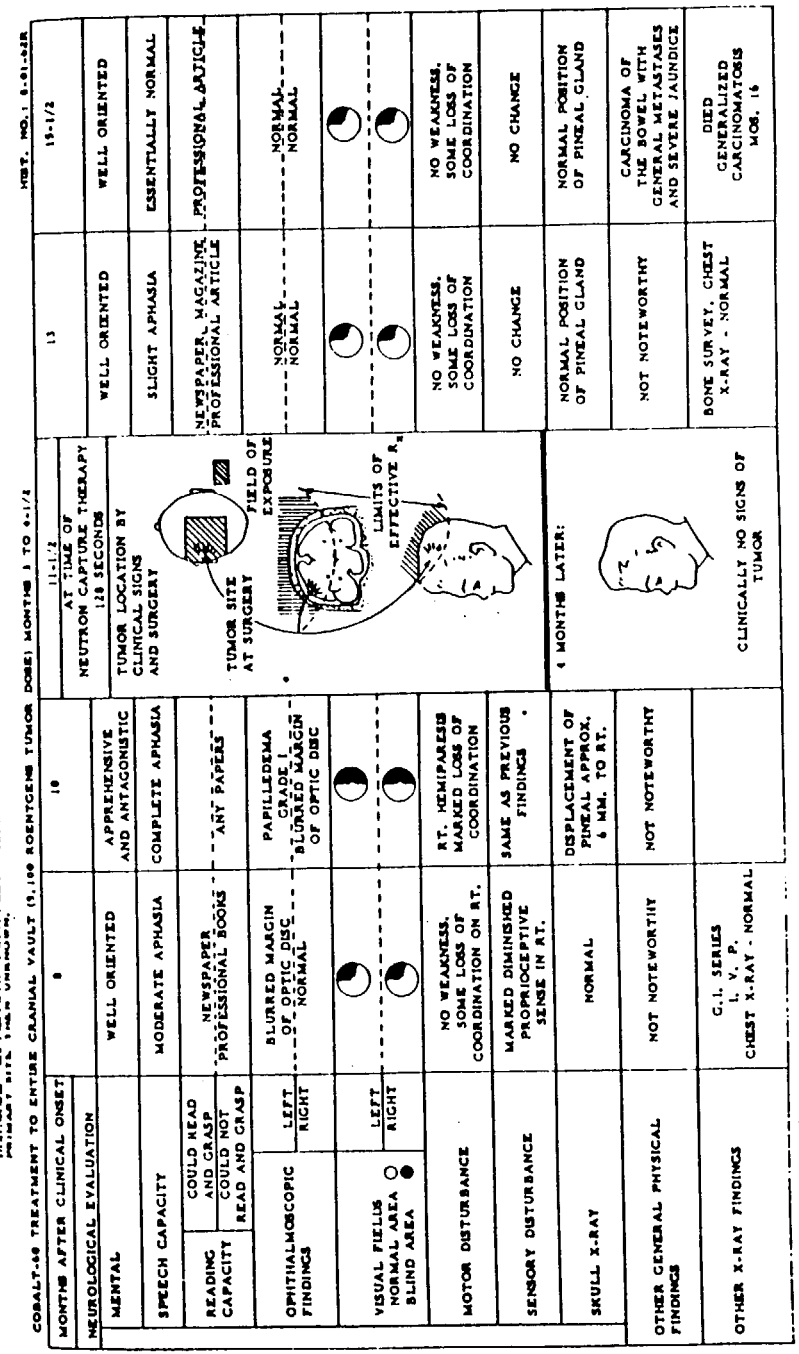


FIGURE 5.—Chart summary of course of patient treated by MRR run No. 10.

DOE/HQ

off rapidly with depth. The problem of calculating the dose a[illegible] given point becomes one of integrating over the volume irradiated the neutron flux expressed as a function of the distance from the point of interest and with the appropriate factors for the gamma-ray attenuation by absorption in the intervening tissues and by the square of the distance included. Such a problem requires the use of a modern electronic digital computer.

Accordingly, Mr. David Levine, of the Brookhaven National Laboratory Applied Mathematics Division, programed the problem of computing the radiation dose due to prompt gamma rays for execution by the IBM-704 digital computer. The brain was considered for mathematical purposes to be roughly cylindrically shaped. This approximating volume was divided into some 20,000 smaller volumes by slicing the cylinder into disks, cutting the disks radially (like a pie) into sectors, and finally subdividing each of the resulting sectors into the smaller elementary volumes by concentric annular cuts. A finer mesh, or pattern of subdivision, was used in the proximal half, representing that portion of the brain closest to the neutron beam port, than was used for the distal half, where the rate of change of the flux is slower and from which the gamma-ray contribution is much less. Within each of the elementary volumes, the neutron flux was regarded as being uniform. The gamma-ray dose at 90 points of interest distributed over another mesh was calculated by summing up the dose contributions to each point from gamma rays generated by neutron capture in each of the elementary volumes. The contributions from the proximal half and the distal half were calculated separately to evaluate their relative importance and added to give the total intrinsic gamma-ray dose at each point of interest. With the addition of the dose due to the nitrogen (np) reaction at the same points, the result is a calculated estimate of the iso-dose curves due to thermal neutron absorption in the volume irradiated. The program is designed to be flexible in allowing a free choice of each of the parameters of geometrical conditions, mesh size, and neutron flux distribution, so that future calculations can be made which will more closely approximate other special situations of interest.

Another output calculation of value is the integrated flux, which provides a basis for calculating the induced radioactivities, particularly sodium 24, potassium 42, chlorine 38, and calcium 49, which are seen following neutron capture therapy procedures. Current efforts are being directed at correlating the induced activities as calculated from a knowledge of the exposure conditions with those measured by the whole-body counter method.

The accelerator-radiology studies at Brookhaven and the particle studies by Tobias, Lawrence and others have been looked to for help in this situation. In contrast with the difficulties noted in making definitive measurements of the mixed radiation situation using reactors, when accelerator neutrons are used, it is possible to invoke the geometric relations of the target (of the Van de Graaff or cyclotron) and the subject (dosimeter or mouse) to specify the energy of the neutrons. These are in essence "monoenergetic" neutrons, but it must be borne in mind that even a small animal, when exposed close to the source, extends geometrically over a spread in energy. It is nevertheless possible to achieve an experimental arrangement of unique value through the use of such machine sources of neutrons to investigate the biological effectiveness of neutrons of selected energies in the low-energy range. These studies are carried out by Drs. Bateman, Bond and Stickley at Brookhaven in conjunction with Dr. H. Rossi at [illegible]lumbia University.

In this [illegible]ork the measurements to corroborate preliminary dose calculations were made, "in air" and in phantoms, with a series of tissue-equivalent dosimeters of special construction. Apparatus was then constructed to expose mice to various sites at different angles to the target beam axis of a 3 million electron volt Van de Graaff generator employed to accelerate protons into a tritiated Zirconium target (the resultant fast neutrons are of energy and flux which are strong functions of the angle of emission from the target). In initial studies, spleen and thymus weight loss at 4-day postirradiation served as the biological indicator. Exposures were made to 5 separate energy levels of monoenergetic fast neutrons and to 250 kvp X-rays. Later, similar studies were done using depletion of spermatogonia in mouse testis as the criterion of effect. For spleen and thymus weight loss, an inverse relation of neutron effectiveness was noted, with the curve declining from values of about 4.5 with less energetic neutrons to about 3.5 at the highest energy. Similar results were noted with spermatogonia depletion; however, a marked increase in effectiveness was noted at about 1 million electron volts. Investigations are being extended to charge-



energetic neutrons on other biological end points such as [illegible] formation. If a specific energy found be suspected as the cause of our clin[illegible] [illegible]plications, then this approach may help give the answer.

At this point insertion of a résumé from Dr. Sweet seems appropriate. In a collaborative effort with the reactor group under Professors Benedict and Thompson at the Massachusetts Institute of Technology, Drs. Gordon Brownell and William Sweet of the Massachusetts General Hospital have been using procedures somewhat different from those of Dr. Farr and his associates to explore the possibility of boron-slow neutron capture on the treatment of primary brain tumors. A surgical operating room constructed directly below the reactor core is used, in which a patient who has recently had all of his main tumor mass removed at a standard brain operation is reoperated. Beneath the reactor the brain is directly exposed once more, and the watery fluid filling the site of the previous tumor removal is replaced by an air-filled balloon in order to give the poorly penetrating slow neutrons maximal access to the parts of the brain containing the tumor remnants. The chemical vehicle for the boron No. 10 atoms has, in the nine patients treated to date, been paracarboxylbenzeneboranic acid. Radiation times have varied from 30 to 105 minutes per patient. A less toxic agent, sodium perhydrodecaborate, which can be safely injected directly into trunk arteries leading to the brain will be used beginning in April 1961. These 2 compounds were selected from a series of 135 tested by Dr. Albert Soloway in mice bearing brain tumors. The best eight of these have been given in small amounts to brain tumor patients during operations at the Massachusetts General Hospital over the past 10 months. The final selections were based on the most favorable behavior for our purposes as judged by a sustained high uptake of the compound in the brain tumor removed at operation contrasted with low uptake by the normal brain. The study is still too young for conclusions to be drawn. (End of Dr. Sweet's comments.)

As noted above, concomitantly with studies on the clinical effects obtainable with neutron capture, animal irradiation experiments have been carried out at Brookhaven since 1949 to study specific cytological effects of the reactions under conditions that are more easily controllable. The effects of the reaction in normal mice have been studied, using various concentrations of $B^{10}$ or $Li^6$ compounds and various neutron exposures. It was shown that it is indeed possible to produce severe radiation damage and death of the animals (whole-body exposure, as opposed to localized exposure) as a result of radiations liberated by the heavy particles from the reaction. Although limitations in dosimetry with the mixed radiations encountered must be recognized, it was quite clear that under appropriate conditions virtually the entire response appeared to result from the heavy particles liberated by target element capture of thermal neutrons, and not by interactions of the thermal neutrons with tissue constituents. Radiations from thermal neutrons alone were determined to be less effective by a factor of 0.6 than were the heavy recoil particles. A direct experimental comparison was made between $Li^6$ and $B^{10}$ compounds, and it was shown that, principally because of chemical toxicity and thermal neutron cross section differences, $B^{10}$ compounds were the more favorable for continued investigations of the effects of the capture process.

An extensive series of studies has been done on mice in which a transplantable tumor has been maintained in the thigh muscles. The transplanted tumor provides a mechanism for testing certain procedures to determine their significance in the patient treatment maneuver. The geometry is so different in the mouse that only a limited number of parameters can be tested. It is possible to selectively expose one leg and thus the tumor to the thermal neutron beam by means of shielding of the remainder of the body with an element with a high cross section for thermal neutrons. Tumors exposed to total thermal neutron exposures of as high as 2 by $10^{13}$ neutrons/cm$^2$ (at tumor surface) show no detectable regression. However, this number of neutrons administered 30 minutes after intravenous injection of a boron compound, sodium pentaborate equivalent to 35 milligrams $B^{10}$/kilogram body weight, results uniformly in complete regression of the tumor which apparently does not recur during the remainder of the animal's life (see fig. 6). Thus, as with total-body radiation, it is clear that the heavy particles from the reaction are capable of producing profound biological effects, in this case on the tumor. It is also clear from such data and from extensive chemical analyses that the boron is present in the tumor at the time of neutron exposure, and that presumably it enters all of the tumor cells. Complete eradication of the tumors resulted. The tumor is radiosensitive, and the [illegible] approximately

1061304

DOE/HQ

ar ich is not seen with capture therapy producing similar results. Histological studies are underway to evaluate further the differences in effects on tissues adjacent to the tumor.

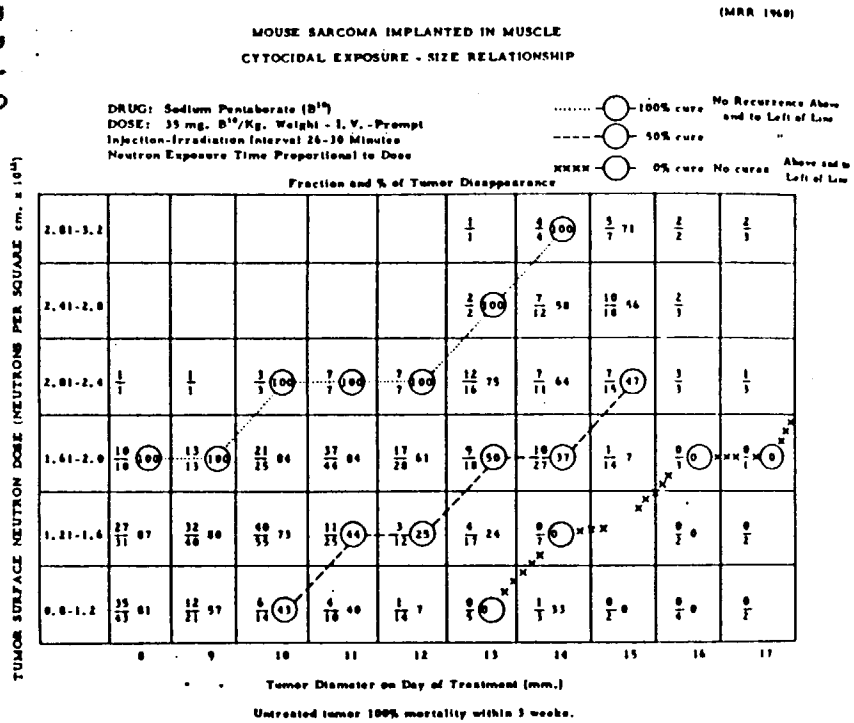


FIGURE 6.—Effect of different exposures to thermal neutrons on outcome of neutron capture therapy on transplantable mouse sarcoma, showing the results on tumors of different diameter on day of treatment.

The short range of the recoil heavy particles (or the order of a cell diameter maximum) presumably would not allow killing of any appreciable number of the cells by particles originating outside of the cells. Although again the limitations of calculated and measured dosimetry must be realized, in terms of specific cytological changes under these specific conditions, it is possible to estimate from dose calculations that the heavy recoil particles are more effective per unit absorbed dose than are X-rays in tumor eradication.

In another instance a opportunity was afforded to study the effects of neutron capture therapy on a great Dane dog with an advanced osteogenic sarcoma of the leg. This accessible tumor was exposed to the thermal neutron beam after $B^{10}$ administration. Following treatment, the tumor regressed in size; however, the animal succumbed to lung metastases undoubtedly present before neutron capture therapy was instituted. Sections taken from the original tumor site showed complete destruction of the tumor. This study indicates, as with transplantable tumor, that boron enters the neoplastic tissue and that cell destruction of the tumor can result from the neutron-boron interaction. Efforts are being made to obtain additional suitable animal material to test the efficacy of the procedure on spontaneous neoplasms.

It is, of course, obvious that results on animal tumors, particularly on transplantable neoplasms, cannot be extrapolated directly to man. However, it is apparent that under suitable conditions boron does enter the neoplasm and that the neoplasm can be eradicated by the intense radiation of the neutron-boron interaction process. The boron apparently distributes throughout the tumor, since total destruction is possible. It is now possible uniformly to



body weight. It has also been learned that nothing is gained by inc the boron dose up to 250 milligrams per kilo even though the relative qua in the tumor by microchemical analysis is proportionally increased. However, predictable "cure" in an individual animal has been found to require a thermal neutron exposure per treatment of not less than $5 \times 10^{13}$ thermal neutrons per square centimeter through the most distal plane of the neoplasm. More thermal neutrons do not appear to enhance the effect significantly, i.e., $5 \times 10^{13}$ fail completely to produce the total effect. When these same limits are applied to patients, the tumor response seems to be identical and predictable. Thus a frame of reference exists in which to predict the outcome of a given experimental treatment. The results support the need for further investigation of methods for the possibility of obtaining more suitable conditions in man to explore optimally its possible efficacy, particularly in respect to certain types of tumors that are not amenable to control by surgery or by radiation, either by established teletherapy or implantation techniques. Examples include certain tumors of the brain, the lung and its adnexa and primary tumors of the bone, which principally because of poor anatomical definition, radioincurability or both, have not been controllable by standard surgical or radiotherapeutic procedures.

The intensive development of microchemistry during the past three decades has encouraged the adaptation of this type of methodology to biochemical uses in medicine. A very special adaptation of nuclear physics to microchemistry is the development of activation analysis. Neutron activation analysis is a potentially sensitive and specific analytical approach which is based on the capability of some atomic nuclei to become activated by neutrons and thus give rise to corresponding radionuclides that can be detected by their radiations. Through these daughter radioisotopes, identification and measurement of the amounts of the parent element may be made. Some published procedures for the neutron activation analysis of various materials with the aid of chemical separations have been developed for purposes other than medical and are often inapplicable to medicine. Materials analyzed were often much less complex than living matter and were even sometimes devoid of organic constituents. Hence it became necessary to formulate the requirements, to investigate the conditions and to define the accuracy and precision of such procedures within the specific context of medical investigation.

The ubiquity of (trace) metals in living matter has been known for many years but the previous paucity of suitable precise techniques curtailed considerably the investigation of their function in human metabolism, both in health and in certain diseases. Although a trace metal may be present only in minute amounts, it may be of great importance chemically as, for example, when it is a specific activator of an enzyme system. Of further importance is the distinction between the total amount which may be very small and a relatively high concentration which may exist in a given type of cell, tissue, or organ, as well as the compartmental exchange of the element, both anatomical and physiological. As one example of the applicability to medicine of neutron activation analysis techniques, experimental work on the determination of the trace element manganese in tissue is cited.

The finding of a rapid disappearance rate of $Mn^{54}$ following injection led to the observation in animals that the element was taken up by tissues rich in a cellular component known as mitrochondria, and this was further noted in man by external scanning of patients. In man, inhalation of manganese ore dust may result in the induction of Parkinson's disease, a slowly progressive, degenerative disease of the central nervous system. Because of these known observations, manganese in various body compartments was studied particularly since its medical investigation has been hampered by inadequate methodology. Extensive preparatory investigations resulted in the definition of conditions under which the following could be accomplished: (1) contamination from extrinsic sources as well as from manganese-rich body pools could be prevented, (2) statistically significant neutron activation could be induced, (3) the resultant $Mn^{54}$ could be recovered with the aid of the true carrier system, without losses and with the contribution from nonmanganese elements known. Very small samples of almost any shape, both liquid and solid, could be employed. Theoretical limitations to this procedure such as "self-absorption" during neutron activation and the production of the same radionuclide from more than one parent element were controlled. Great attention to detail had to be observed with a combination of approaches involving two essential steps; namely, activation

1067310

DOE/HQ

in or reactor and "sorting out" of radiations so that specific nuclides might en. In the actual application of this technique with the selected trace element manganese, analysis of human plasma samples detected as little as 3 micrograms of Mn per liter, a rather stable value which could not be changed materially by feeding manganous sulfate orally. To illustrate further the high sensitivity of this method, it was possible to determine the manganese content of bile samples taken serially in studies on manganese metabolism in the rat. Experimental work is continuing both in animals and in patients, using this technique, to determine the role played by manganese in normal metabolism and in disease, particularly Parkinsonism.

Another quite different example of use of the activation analysis technique involves attempts to localization of appetite control centers. Obesity is a major predisposing cause of arteriosclerosis, hypertension and diabetes and, in addition, is associated per se with a decrease in longevity. For this reason patients with obesity are under study in the Brookhaven Hospital, and an experimental program concerned with fat metabolism and nutrition is underway in the laboratory.

One aspect of the laboratory program concerns the regulation of hunger, appetite, and satiety by the central nervous system. Work in the past suggested that one of the critical functions of the hypothalamus (a brain center) is the integration of energy intake and energy expenditure. This is accomplished by virtue of the interplay of a lateral neuronal integrating center, which in some manner induces a striking increase in food intake, and a medial "satiety" center, which exerts an inhibitory influence on food intake fibers running laterally to the "feeding" center. Presumably the inhibitory activity of the medial center is stimulated when, after a meal, there is an increased blood level and intracellular entry of glucose.

The glucostatic theory of appetite regulation rests heavily on the assumption that gold thioglucose produces lesions in the aforementioned satiety center of the ventromedial hypothalamus. It is contended that the toxic gold moiety destroys the satiety-integrating neurones after being selectively accumulated by virtue of the special affinity of these cells for glucose.

BNL efforts to date have been directed at ascertaining by activation analysis coupled with radioautograph (*a*) the quantitative estimation of gold 197 and/or sulfur 32 in the brain tissue of gold thioglucose-treated mice and (*b*) the anatomical localization of the induced radioactivity with relation to the centers of appetite regulation which have been postulated.

On the basis of preliminary calculations assuming uniform distribution of gold thioglucose in body tissues, it was predicted that the total accumulation of this compound in brain tissue is less than 1 microgram per mg. tissue and therefore it would not be measured by chemical methods. Moreover, in view of the time (2–6 months) required to produce the gold thioglucose syndrome of hyperphagia and obesity, activation analysis was considered to be a more promising experimental approach than conventional tracer techniques. The first study involved the activation of brain tissue taken from normal mice and gold thioglucose-treated obese mice. The brain tissue was activated at a neutron flux of $7.5 \times 10^{11}$ neutrons/sec-cm$^2$ for various periods of time ($Au^{197}$ (n.y) $Au^{198}$). Gamma emission at 0.41 Mev was recorded with a 100-channel analyzer and used to quantify the tissue level of $Au^{198}$. In some experiments, cadmium foil shielding of tissue samples was atte[illegible]ted to diminish the activation of interfering tissue components such as sodium potassium and chloride and thus to reduce the background for direct counting of the tissue.

Of particular interest is the fact that the induced radioactivity was localized in discrete areas of the hypothalamus by autoradiography (beta sensitive emulsion). At low beta energies, radioautographic resolution permits the indentication of single cells or cell groups that have concentrated the gold thioglucose. In addition, it is independent of the soluble activation products since routine processing of tissues removes all material soluble in water, ethyl alcohol and xylene, although special methods exist to retain these materials if of interest.

In summary, neutron activation of mouse brain tissue has made possible quantification and radioautographic localization of gold thioglucose in amounts well under 1 microgram. Using these methods, gold thioglucose has been localized in discrete symetrical areas of the ventro-medial hypothalamus. The technique of neutron radioactivation, as used in this study, constitutes a new method for the cellular localization of gold or other apropriate heavy metals in tissue, and demonstrates uniquely the combined functional and anatomical localization of a neuronal integrating [illegible]



unit incorporated into it to permit manufacture of short half-life iso[illegible] the proximity of the source to the medical use becomes the critical factor. In regions of the United States, remote from reactors which can supply radioactive isotopes for medical uses, sodium-24, a 14.8-hour half-life element, cannot be used because of rate of physical decay. With immediate proximity to a reactor, such as in the Medical Department at Brookhaven, or at the cooperating medical schools with the Massachusetts Institute of Technology Reactor, the problem becomes one of technology; namely, production of suitable quantities with requisite purity, and sophistication of the users.

The use of radioactive elements as tracers to give information on rates of movement and fate of constituents within the body in a mixture largely or entirely nonlabeled has become very important. Labeled compounds and elements may be utilized to elaborate mechanisms involved in the development and alleviation of various disease processes as well as to learn more about normal physiologic metabolic pathways. The aim and principal advantage in tracer methodology is to be able to follow accurately the labeled product in very small amounts and with very low levels of radiation (giving negligible radiation exposure to the patients). In this general field, short-lived radioisotopes (with physical half-lives from minutes to hours) have been sought for and examples of some of them produced in a reactor are noted in the following illustrations.

Comparative studies in gastric secretion in rats of administered short-lived halides have been made with the following elements: $Cl^{38}$ ($T\frac{1}{2}$, 37.3 minutes), $I^{128}$ ($T\frac{1}{2}$, 2.4 hours), $At^{211}$ ($T\frac{1}{2}$, 7.5 hours, and $Br^{77}$ ($T\frac{1}{2}$, 35.9 hours). $Kr^{77}$ ($T\frac{1}{2}$, 78 minutes) has been used experimentally in dogs to suppress gastric secretion. With $Mn^{56}$ ($T\frac{1}{2}$, 2.5 hours), following injection into several species, its characteristic partition among tissues has been determined. Likewise short-lived isotopes of copper, zinc and technetium have been examined metabolically in relation to manganese. Xenon has been established as an agent with which complete surgical anesthesia may be produced in man. To learn more about the distribution of this element in the brain, $Xe^{133}$ ($T\frac{1}{2}$, 0.2 hours) was administered by inhalation to dogs and the measurements of this anesthetic gas in more than 20 tissues, including central nervous system, was made. In addition, in order to obtain more information regarding the uptake and the elimination of anesthetic agents by the brain, a comparative study was conducted with radioactive chloroform containing $Cl^{38}$. This can be made by exposing chloroform in a reactor if it be in a suitable container. Differences in post-anesthetic recovery rates from Xenon and chloroform were found to be due to differences in their excretory processes at the blood-air interface in the lungs.

The utilization of short-lived isotopes, by this brief current and historical examination, is seen to be rather a selection of a specific tool for a specific job than a general approach in which the short life itself is the dominant factor rather than the chemical nature of the element in its carrier. As more reactors capable of generating short-lived radioisotopes become available to university and industrial investigators, it may be expected that there will be an increase in the use of these materials.

Finally, a few words regarding neutron therapy are in order. While fast neutrons have a marked direct effect upon tissues, with slow or thermal neutrons, detectable effects result only from relatively large doses. The reactions produced by thermal neutrons on nitrogen, hydrogen, carbon, chlorine and most of the other elements constituting the body, result in unstable nuclides decaying by proton, gamma or beta emissions. In addition, the properties of thermal neutrons are such that they cannot readily be focused to a given point in the body, which further reduces their apparent usefulness in a direct approach to cancer therapy. In the course of studies at Brookhaven, one patient undergoing treatment at the Graphite Research Reactor was exposed to thermal neutrons alone. No effects resulted. Extension and intensive exposures of the transplantable mouse tumor used at Brookhaven has shown no detectable effects to result from thermal neutron exposure alone at the dose levels used. It can be said on the basis of experience to date that without interposition of a secondary reaction such as with neutron capture therapy, thermal neutrons alone are without any promise. On the other hand, intermediate energy neutrons ranging up to the kilovolt range might conceivably have significant biological effects of which advantage may be taken. Lack of suitable instrumentation to measure neutrons of this energy and lack of information regarding possible devices to permit selective screening of neutron emissions to a single energy band in practical measure, leads one to the conclusion that at this time no

1067311

DOE/HQ

TABLE

Title: Comparison of radiation output for various tested configurations at the neutron therapy port of the MRR, normalized for one megawatt operation. Enterposed in all configurations was 10 inches of graphite and 12 inches of bismuth in the reflector region.

| Configuration | Moderator Inches Thickness | Moderator Inches Thickness | Inches of Bismuth | Type of Liner | Inches of Bismuth | ( $10^{10}$ ) (n/cm$^2$ sec) | r per minute | ( $10^6$ ) (n/cm$^2$ sec) |
|---|---|---|---|---|---|---|---|---|
| | | (.....Shutter Section.....) | | | (Port) | Slow Neutrons | Gamma Rays | Fast Neutrons |
| 1.[a] | 6 graphite | 12 graphite | 4 | Plastic | 2 | 2.27 | 130 | -- |
| 2.[a] | 6 graphite | 12 graphite | 4 | Plastic | 4 | 1.60 | 62 | -- |
| 3. | 6 $D_2O$ | 4 graphite | 8 | None | None | 1.89 | 180 | -- |
| 4. | 6 $D_2O$ | 4 graphite | 8 | Plastic | None | 7.45 | 400 | -- |
| 5. | 6 $D_2O$ | 4 graphite | None | None | None | 3.82 | 750 | -- |
| 6. | 6 $D_2O$ | 4 graphite | None | Plastic | None | 6.40 | 300 | -- |
| 7. | 6 $D_2O$ | 4 graphite | None | Pl. + Al | None | 6.12 | 857 | -- |
| 8. | 6 $D_2O$ | 4 graphite | None | Bismuth | None | 5.24 | 550 | -- |
| 9. | 6 $D_2O$ | 4 graphite | --[e] | Pl. + Al | None | -- | 670 | -- |
| 10.[b] | 6 $D_2O$ | 4 graphite | 8 | Bismuth | 2 | 1.66 | 54 | -- |
| 11. | Empty | Empty | 4 | Plastic | 3 | -- | -- | 19. |
| 12. | 6 $D_2O$ | Empty | 4 | Plastic | 3 | -- | -- | 6.8 |
| 13. | Empty | 8 $D_2O$ | 4 | Plastic | 3 | -- | -- | 1.8 |
| 14. | 6 $D_2O$ | 8 $D_2O$ | 4 | Plastic | 3 | -- | -- | 0.45 |
| 15.[c] | Empty | 8 $D_2O$ | 4 | Plastic | 3 | 1.88 | 37 | -- |

FOOTNOTES FOR TABLE

N.B. All thicknesses are in inches.

a. Figure 1 represents both configuration 1 which was used in the first five patient runs (30-39) with the MRR and configuration 2 used for the next two runs (35-36).

b. Figure 2 represents configuration 10, typical of the intermediate experimental evaluations of geometrical factors in the neutron optics of the channel.

c. Figure 3 shows the arrangement described in the table as item 15, which was used for the last nine runs with the MRR for patient treatment (runs 37-46).

d. Fast neutrons: the numbers recorded in the column are for neutrons determined by activation of sulfur foils, above 1.5 Mev energy. No neutrons of higher energy than 3 Mev were detected. In addition, for item 10, resonance foil measurements were reported as $10^8$ n/cm$^2$·sec for the gold characteristic (5 electron volts). For item 15, the gold resonance gave $10^8$ n/cm$^2$·sec approximately both for the gold resonance (5 ev) and the copper resonance (560 ev) response.

e. For this test (item 9) boron carbide was inserted in place of the bismuth.

1067312

DOE/HQ