OPTIONAL FORM NO. 10

UNITED STATES GOVERNMENT [redacted]

This document consists of 55 pages
No. 4 of 107 Copies, Series A

Memorandum

TO : Those Listed Below

DATE: FEB 27 1963

FROM : James E. Reeves, Manager
Nevada Operations

DNA1.950210.016

SUBJECT: PLANNING DIRECTIVE (NTS-19-2-63) OPERATION ROLLER COASTER

References:

a. S/DI letter from FCWT to CH/DASA, dated September 17, 1962, symbol FC/09620505. Subject: Plan of Action for Initiating Operation ROLLER COASTER.

b. S/RD TWX from FC/DASA, dtg 020257Z, October '62, announcing ROLLER COASTER planning conference October 9 and 10, 1962, at FC/DASA.

c. S/RD (Conf. w/sep.) letter from FC/DASA, dated October 26, 1962, summarizing three Operation ROLLER COASTER conferences held at FC/DASA during October 9 through October 12, 1962. Summary includes "Operation ROLLER COASTER Preliminary experimental Program for Biophysical and Scavenging Tests" (draft FC/DASA, 10/15/62).

d. Preliminary proposal, Operation ROLLER COASTER, from FC/DASA to Manager, NVOO, dated November 1, 1962.

e. S/DI memorandum from DMA to J. E. Reeves and K. F. Hertford, dated November 7, 1962, R/N 26717, regarding funding and technical responsibilities for Operation ROLLER COASTER.

f. C/DI letter from FC/DASA to CH/DASA, dated November 6, 1962, R/N 197330, subject: Test Program for Evaluation of Storage, Handling, and Transportation Criteria for Plutonium-bearing Weapons, Operation ROLLER COASTER (includes as enclosures: "ROLLER COASTER Organization Chart" and "Weapons Requirements and Modifications".)

(continued)

Declassified WITH DELETIONS BY DNA, Chief, ISTS; DOE 945A206 DOE/190-WC and AF (U NSS/NSSL) memo 30 Jan 95
Date: 2/2/95

[redacted]

S[redacted]

HRE-1018

MU-7

g. TWX from DMA to J. E. Reeves, dtg 292033Z, November '62, regarding camp requirements for Operation ROLLER COASTER.

h. Memorandum from R. C. Emens/R. E. Miller, dated November 30, 1962, regarding preliminary cost estimates for 400-man camp.

i. Letter from FC/DASA to NVOO, dated December 7, 1962, requesting Cactus Flats area of the Tonopah Test Range be made available for Operation ROLLER COASTER.

j. TWX from K. F. Hertford to DMA, dtg 122162Z, December '62, designating Everett R. Mathews as ALOO coordinator for Operation ROLLER COASTER.

k. TWX from FC/DASA to NVOO, dtg 131735Z, December '62, designating Lt. Colonel J. L. Dick as Research Group Director, Lt. Colonel H. H. Elmendorf as Deputy for Operations and Lt. Colonel B. A. Robinson as Deputy for Support.

l. TWX from DMA to NVOO, dtg 2611639Z, December '62, stipulating Operation ROLLER COASTER as a research program.

m. Letter from FC/DASA, dated December 27, 1962, subject: Formal Proposal for Operation ROLLER COASTER with enclosure "Research Program for Evaluation of Storage, Handling, and Transportation Criteria for Plutonium-bearing Weapons, Operation ROLLER COASTER.

n. TWX DMA/NVOO, dtg 302145Z, January '63, giving approval for ROLLER COASTER subject to funding agreement between AEC and FC/DASA.

(continued)

o. C/DI teletype MacCaulty, USAEC, Washington, to Vermillion, NVOO dtg 282141Z, January '63, presenting rewrite of ROLLER COASTER announcement.

p. Confidential letter FC/DASA to NVOO dated January 29, 1963, Subject: Operation ROLLER COASTER Schedule.

q. Memorandum of Understanding No. AT(29-2)-1463, AEC/ALOO, AEC/NVOO, and FC/DASA for the Implementation of Operation ROLLER COASTER.

r. Letter Nellis AFB/Sandia Area Office dtd January 29, 1963, summarizing results of joint usage meeting at NAFB on January 23, 1963.

s. TWX USAADTC, Ft. Irwin/FC, DASA dtg 111845Z February '63, announcing 58th Ord. de-dudding team for ROLLER COASTER. Period from February 15, 1963, through March 30, 1963.

1. General.

Operation ROLLER COASTER is the nickname assigned to a series of tests designed to investigate the biological hazards of scattered plutonium and to evaluate the plutonium scavenging effects of earth-covered storage structures. The tests are sponsored jointly by the AEC, DOD, and UK as a research program. No nuclear reaction will occur in these tests which involve the one-point detonation or propagation detonations of modified [redacted] devices.

There will be a total of four shots in the program. One of the shots has been assigned the nickname Double Tracks and is a research study designed to investigate the particulate characteristics of plutonium subjected to a one-point detonation, the acute exposure problems measured by both physical and biophysical techniques and to refine the "cloud model" and associated fallout pattern. The remaining three shots have been assigned the nickname Clean Slate and are studies representing conditions of open storage, storage in a DASA-type igloo with two feet of earth cover and a DASA igloo

(continued)

with 8 feet of earth cover. The hazard reduction by earth scavenging will be determined in two experiments conducted in the earth-covered igloos.

2. Objectives

The basic objectives of Operation Roller Coaster are as follows:

a. Obtain by physical and biological measurements necessary data on the plutonium airborne particulate to permit an assessment of the acute (inhalation) hazard.

b. Measurement of the distribution of plutonium on the ground to permit detailed accountability of the amount involved.

c. To evaluate the total effectiveness of the structures, including varying thickness of earth cover as a scavenging material, in reducing the radiological hazard which would arise in the event of an accidental non-nuclear explosion.

d. Obtain meteorological data on this test which can be used in conjunction with a cloud model to forecast the radiological hazard to man under other weather conditions.

In evaluating the results of the experiments, it is anticipated that mutually acceptable United States and United Kingdom criteria for storage, transportation and handling of plutonium-bearing weapons can be formulated.

3. Organization and Responsibilities

a. Organization

Operation Roller Coaster will be accomplished within the framework of the NTS Organization, as prescribed by NTSO-SOP-0101-01, with organizational assignments listed in Appendix I. In Operation Roller Coaster the Project Manager,

(continued)

Alternate Project Manager, Deputy Project Manager, Director, Office of Project Information and Research Group Director are synonymous with the Test Manager, Alternate Test Manager, Deputy Test Manager, Director, Office of Test Information, and Test Group Director respectively, as specified in the NTSO-SOP. Assigned responsibilities as specified under the NTSO-SOP concept will be in no way deviated because of the change in nomenclature.

b. Responsibilities

The general responsibilities of each participating agency in Operation Roller Coaster are as follows:

(1) AEC, NVOO

(a) Provide necessary maintenance, logistical and safety facilities to support Operation Roller Coaster, direct the NTSO, collaborate with the Research Group Director of Operations Roller Coaster in the development of the program; direct the execution of the program in accordance with approved criteria; provide a Project Manager responsible for detonation of devices and for the direction of operations, operational safety, construction and support planning; resolution of operational differences; direction of activities associated with the safety of personnel and property, both on and off-site; direction of the NTSO information program which is a joint AEC-DOD function. The details of these responsibilities are as set forth in this Planning Directive and as will be set forth in the Operations Order.

(b) Provide facilities, field support and technical services as required by the Research Program.

(c) Execute Operation Roller Coaster utilizing the NTSO and its Standard Operating Procedures appropriate to the sites selected for the program.

(continued)

(d) Provide accountability control through its SS Station SFN for all SS materials consigned to NV for this program.

(e) Make arrangements through the NTSO Operations Coordinator for coordinating and obtaining usage of the required areas within a mutually acceptable time frame to AEC, FC/DASA, Sandia Corp., and the Nellis Air Force Base.

(f) Make arrangements through the NTSO Operations Coordinator for de-dudding pertinent areas prior to construction activities and placement of program technical facilities and/or personnel in the areas.

(g) Make arrangements through the NTSO Operations Coordinator for clearing the operational areas of cattle during the test period.

(h) Secure the necessary approval from DMA to fly balloons during the program.

(2) <u>AEC, ALOO</u>

(a) Arrange for the assignment of Sandia Corporation personnel and resources as required for the technical direction and support of Operation Roller Coaster.

(b) Provide source and special nuclear materials required for the test devices for all events and provide devices for the scavenging events upon request from FC/DASA, when approval of the test plan and authority to execute have been granted.

The devices provided will consist of [redacted] contained in a [redacted] case and suitable for one-point detonation at any detonator well plus 44 modified H. E. spheres. The [redacted]

(continued)

[redacted] will have all [redacted] removed and replaced with depletalloy (D38) of similar mass and configuration. Each of these will contain approximately [redacted] of plutonium. The 44 modified H.E. spheres will contain depletalloy similar in mass and configuration to equal the total [redacted] content of a [redacted] None of the devices used in the program will contain any type of initiation system.

(c) Arrange for contractors and/or consultants required in connection with Biomedical Studies, Program 4.

(3) FC/DASA

(a) Assign FC/DASA technical and support personnel and technical resources as required to support Roller Coaster.

(b) Arrange for contractors and/or consultants as required in connection with Physical Measurements Program 2, Laboratory Analysis Program 5 and Support Program 9 in which Field Command participates, AEC participates or both participate.

Such contracts or agrements shall include patent provisions in accordance with Armed Services Procurement Regulations (ASPR) 9-107.4, April 15, 1962, Rev. 9.

(c) Prepare and provide the NTSO Test Manager an expenditure report of SS materials expended in the execution of this program.

(d) Provide military explosive ordnance disposal teams (for de-dudding purposes) to be employed only through coordination with the NTSO Operations Coordinator.

(continued)

(4) UNITED KINGDOM

Participation of the UK in this program has been authorized by the Joint Atomic Exchange Group. The Research Group Director is responsible for coordination with the UK to assure the compatibility of their technical requirements with the capabilities of the NTSO. The UK, therefore, is not a party to administrative arrangements.

4. Execution

a. General Concept

(1) The Double Tracks portion of the program will consist of one one-point detonation of a modified [redacted] containing plutonium and contained in a [redacted] case. The device will be placed in a cradle one foot above a one-inch thick steel plate measuring 8' x 8'. The plate will rest on a one-foot thick reinforced concrete pad, 20' x 20'. The surface soil will be stabilized with oil to a radius of 50 feet.

Approximately 84 dogs, 84 burros, and 132 sheep will be utilized in the biological studies. An extensive array consisting of air samples, fallout collection and animal stations extending 10 miles downwind and encompassing an area of 50 square miles or more will be set up to delineate the distribution of the plutonium.

The location selected for Double Tracks is in the Stonewall Flats area. Coordinates are 37° 33' N to 37° 50' N and 116° 46' W to 117° 05' 30" W.

Ground Zero when finalized will be incorporated into the Operation Plan Appendix 3.

(2) The Clean Slate portion of the program will consist of three shots.

The first shot (open) will be one-point propagation

(continued)

detonations of nine modified [redacted] one of which contains plutonium, mounted one foot above a pad of reinforced concrete 24' x 24' x 6" thick. (See Annex I, Appendix 8, for array.)

The second shot (2' earth-covered igloo) will be one-point propogation detonations of 19 modified [redacted] one of which contains plutonium, placed in a standard storage igloo covered with two feet of earth.

The third shot (8' earth-covered igloo) will be the same as the second shot except for 8 feet of earth-cover and the addition of an instrumented acceptor igloo.

Extensive physical measurements will also be made for Clean Slate. The array will be approximately five miles in length and three miles wide at the distant arc. (See Annex J, Appendix 8, for arrays for the second and third shots.)

The location slected for these shots is in the Cactus Flats area. Coordinates are 37° 33' N to 37° 50' N and 116° 30' W to 116° 46' W. Coordinates for ground zero when finalized will be incorporated into the Operations Plan, Appendix 3.

b. Operational Criteria

(1) Safety Responsibilities

(a) The Director, Operational Safety, is responsible to the NTSO Project Manager for operational safety, including radiological safety, as it involves the general public and adjacent populace off-site and for on-site operational safety as it effects the operational area and the Nevada Test Site as a whole.

(continued)

An Operational Safety Plan will be formulated by the Director, Operational Safety Division, NVOO upon receipt, on or about February 15, 1963, of necessary criteria from FC/DASA. This plan will be subsequently incorporated into this Planning Directive as Appendix 6.

(b) The Research Group Director is responsible to the Project Manager for the radiological safety within the area in which the events are executed, from detonation time until, by mutual agreement, the responsiblities revert to the Director, Operational Safety. The Project Manager, in any case, always retains overall responsibility for operational safety.

(2) Radiological Safety Criteria

(a) Emplacement and firing of the devices will be predicated upon the objective of minimal off-site radiological contamination consistent with program requirements and objectives. Circumstances associated with obtaining such minimum radiological contamination are to be based upon the recommendations of the DOD and is subject to review and approval of the Project Manager.

(b) The criteria established in AEC Manual Chapter 0524, and any revisions or exceptions thereto, and NTSO-SOP Chapter 0524, as modified, will be the basis for establishing permissible levels of radiation exposure and contamination on-site for the events. Any additional criteria required for implementation of this program will be specified in the Operational Safety Plan (Appendix 6) at a subsequent date.

(c) Shots will be fired only when atmospheric conditions will assure that radioactivity will not exceed the off-site criteria designated in AEC Manual Chapter 0524, and any revisions or exceptions thereto, and NTSO-SOP Chapter 0524, as modified.

(continued)

Any additional criteria required for implementation of this program will be specified in the Operational Safety Plan (Appendix 6) at a subsequent date.

(3) Operations Coordination Responsibilities

Specific information relative to operations coordination responsibilities, including air support, is contained in NTSO-SOP Chapter 0103-09.

(4) Classification Guidance

The AEC/DOD General Classification Guide for Continental Test Operations (CG-WT-1) supplementing the Weapons Classification Guide (OC-DOC-71) is the basis for classification guidance for Project Roller Coaster. Problems not covered in the guide should be referred to the Classification Advisor listed in Appendix 1.

The term "Roller Coaster" and the fact that United Kingdom personnel are participating is unclassified.

(5) Security Guidance

Reference NTSO-SOP Chapter 2001. Since other interests are involved with respect to various activities being conducted concurrently in the Stonewall Flats and Cactus Flats Areas, the Director, Security Division will formulate a security plan applicable to the execution of Project Roller Coaster. The plan will be formulated and incorporated into this Planning Directive as Appendix 7 following the receipt of specific criteria from FC/DASA on or about February 15, 1963. Security requirements for admittance to the test site and badging of project personnel will be submitted to the Security Division, NVOO. FC/DASA will arrange for the certification of military clearances to NV for those DOD recipients who are to receive Restricted Data from AEC.

(continued)

Physical security at the test site, including special weapons security, will be provided by the NV Security Division, utilizing FSI for guard support, in accordance with "Memorandum of Agreement - AEC/DOD - Use of Nevada Test Site Facilities dated January 14, 1961."

(6) Public Information Guidance

The Director, Office of Project Information, listed in Appendix 1, is responsible for the coordination and issuances of information to the public and for conduct of observer programs.

The Public Information Plan for Operation Roller Coaster is shown in Appendix 4.

c. Coordination

(1) FC/DASA is responsible for the preparation, distribution, and approval of technical criteria for Operation Roller Coaster. This shall be in accordance with NTSO-SOP Chapter 6001.

(2) Overall coordination of operations, including the coordination of scheduling with other NTS users, Nellis Air Force Base and Sandia Corporation, is the responsibility of the NTSO Operations Coordinator listed in Appendix 1. An Operations Plan will be incorporated into this Planning Directive as Appendix 3 at a subsequent date.

(3) The NTSO Director, Support Division listed in Appendix 1 is responsible for the coordination of construction and support schedules including communications based upon approved criteria to be submitted by FC/DASA. An Engineering Construction and Support Plan will be incorporated into this Planning Directive as Appendix 5 at a subsequent date. A general description of support requirements is shown in Annex A, Appendix 5.

(continued)

(4) The Research Group Director is responsible for coordination with the United Kingdom to assure the compatibility of their technical requirements with the capabilities of the NTSO.

(5) AEC, ALOO is responsible for the coordination with the Operations Division, NVOO for the shipment of post-shot samples.

(6) Specific plans relating to the field execution of Operation Roller Coaster will be formulated and incorporated into this Planning Directive upon receipt and review of detailed criteria from FC/DASA on or about February 15, 1963.

Specific and detailed criteria required from FC/DASA are as follows:

(a) Engineering Construction and Support. (Communications, Camp facilities, office facilities, messing, water, roads, power, transportation, vehicles, trailers, animal shelters, storage facilities, balloon arrays, pads, towers, instrumentation arrays, etc.) Locations when applicable must be specified.

(b) Security. (Proposed methods for controlling personnel accesses and clearances and control of devices and emplacement areas.)

(c) Operations. (Time scales, specific locations, etc.)

(d) Health and Safety Evaluations and Hazards. (Radiation and contamination, personnel safety, emplacement, arming timing, firing, detailed procedures for operation of balloon curtains and evacuation plan.)

(continued)

Plans to be developed by NVOO and submitted to the Programs and Plans Division no later than 2 weeks following receipt of criteria from FC/DASA are as follows:

(a) Operation Plan (Appendix 3) - To include site control concept, real estate, operational coordination, and other items as necessary.

Responsibility is assigned to the Director, Project Operations Division, NVOO.

The "Memorandum of Understanding Nevada Operations Office, U. S. AEC and Nellis Air Force Base for Use of Stonewall Flats Area of Nellis Air Force Range Area R-4807 for Operation ROLLER COASTER" is shown in Appendix 3, Annex A.

(b) Engineering, Construction, and Support Plan (Appendix 5) - To include general statements as to use of contractors, description of work to be accomplished, handling of operational support services, construction support, field support, rad-safety support, and others as required.

Responsibility is assigned to the Assistant Manager for Engineering and Support, NVOO.

(c) Operational Safety Plan (Appendix 6) - To include the safety concept (on-site and off-site). This should encompass all aspects of the operational safety program, including rad-safety, meteorological, ground-shock, structure surveys, evacuation, and others as required.

Responsibility is assigned to the Director, Operational Safety Division, NVOO.

(continued)

(d) Security Plan (Appendix 7) - To include all aspects of the security program, including badging system, procedures for protecting classified information and documents, guard provisions, physical security arrangements, facility requirements, and others as necessary.

Responsibility is assigned to the Director, Security Division, NVOO.

5. Funding.

a. In general, all support costs incurred by NVOO in Operation ROLLER COASTER will be charged to FC/DASA. Actual cost will be prorated between AL and FC/DASA by FC/DASA. Funding will be per Memorandum of Understanding, No. AT(29-2)-1463, contingent upon mutual agreement by AEC/NVOO, AEC/ALOO, and FC/DASA.

b. Costs related to UK participation will be handled by the DOD.

6. Reports.

AEC reports, as applicable, will be in accordance with NTSO-SOP Chapter 8806.

The Research Group Director, upon completion of the program, is requested to furnish AEC/NVOO a brief resume of the technical accomplishments and proceedings of Operation ROLLER COASTER.

Appendices:
Appendix 1 - Personnel Assignments - Project Roller Coaster
Appendix 2 - Operations Schedule
Appendix 3 - Operations Plan
Annex A - Memorandum of Understanding, NVOO, USAEC, and Nellis Air Force Base - Operation Roller Coaster

(continued)

[redacted]

Appendix 4 - Public Information Plan
Appendix 5 - Engineering, Construction and Support Plan
Annex A - General Support Requirements
Appendix 6 - Operational Safety Plan
Appendix 7 - Security Plan
Appendix 8 - Scientific Program - Operation Roller Coaster, Annexes A-J

DISTRIBUTION:

1/107A - E. J. Bloch, AGM, Opns., AEC, Wash., DC
2-3/107A - Maj. Gen. A. W. Betts, Dir., DMA, AEC, Wash., DC
4-5/107A - Capt. R. F. Craig, Asst. Dir. for Tests, DMA, AEC, Wash., DC
6-7/107A - J. S. Kelly, Dir., DPNE, AEC, Wash., DC
8-9/107A - Dr. C. L. Dunham, Dir., DBM, AEC, Wash., DC
10/107A - F. K. Pittman, Dir., DRD, AEC, Wash., DC
11/107A - Dr. N. H. Woodruff, Dir., Div. Opn's Safety, AEC, Wash., DC
12/107A - W. H. Slaton, Dir., Div. of Plans & Reports, AEC, Wash., DC
13/107A - E. C. Shute, Mgr., SAN, AEC, Berkeley, Calif.
14/107A - K. F. Hertford, Mgr., ALO, AEC, Albuq., N. M.
15/107A - Everett Mathews, Adv. Plan., ALO, AEC, Albuq., N. M.
16/107A - C. C. Campbell, Area Mgr., LAAO, AEC, Los Alamos, N. M.
17/107A - W. L. Hancock, Area Mgr., SAO, AEC, Albuq., N. M.
18/107A - N. E. Bradbury, Dir., LASL, Los Alamos, N. M.
19/107A - R. E. Schreiber, LASL, Los Alamos, N. M.
20/107A - A. C. Graves, LASL, Los Alamos, N. M.
21/107A - W. E. Ogle, LASL, Los Alamos, N. M.
22/107A - G. A. Cowan, LASL, Los Alamos, N. M.
23/107A - R. W. Newman, LASL, Mercury, Nevada
24/107A - R. H. Campbell, LASL, Mercury, Nevada
25-26/107A - J. S. Foster, Jr., Dir., LRL, Livermore, Calif.
27/107A - R. E. Batzel, Assoc. Dir., LRL, Livermore, Calif.
28/107A - J. E. Carothers, LRL, Livermore, Calif.
29-32/107 - V. F. Denton, LRL, Livermore, Calif.
33-37/107 - C. M. Bacigalupi, LRL, Mercury, Nevada
38/107A - J. L. Olsen, LRL, Mercury, Nevada

(continued)

[redacted]

[redacted]

39/107A - S. P. Schwartz, President S/C, Albuq., N. M.
40-42/107A - D. B. Shuster, Org. 7200, S/C, Albuq., N. M.
43/107A - T. B. Cook, Org. 5110, S/C, Albuq., N. M.
44/107A - R. G. Luckey, Org. 4100, S/C, Albuq., N. M.
45/107A - K. Kerns, Org. 7250, S/C, Albuq., N. M.
46-47/107A - C. L. Gomel, Org. 7256, S/C, Mercury, Nev.
48/107A - R. D. Statler, S/C, Tonopah Test Range
49-50/107A - H. E. Grier, EG&G, Las Vegas, Nev.
51/107A - F. I. Strabala, EG&G, Boston, Mass.
52/107A - G. P. Stobie, CP-1, Mercury, Nev.
53-55/107A - E. G. Bowen, H&N, Los Angeles, Calif.
56-57/107A - L. E. Rickey, H&N, Las Vegas, Nev.
58/107A - J. R. Crockett, REECo, Las Vegas, Nev.
59/107A - R. F. Beers, Inc., Alexandria, Va.
60/107A - H. L. Browne, P.O. Box 11151, Palo Alto, Calif.
61/107A - T. F. Thompson, 611 Howard St., San Francisco, Calif.
62/107A - M. E. McIntire, FSI, Mercury, Nevada
63/107A - E. C. Anderson, USPHS, Wash., DC
64/107A - O. R. Placak, USPHS, c/o USAEC, Las Vegas, Nev.
65/107A - D. H. Pack, USWB, Wash., DC
66/107A - P. W. Allen, USWB, c/o USAEC, Las Vegas, Nev.
67/107A - T. B. Nolan, Dir., USGS, Wash., DC
68/107A - E. B. Eckel, USGS, Denver, Colorado
69-70/107 - Robert A. Earle, USC&GS, Wash., DC
71/107A - T. H. Pearce, USC&GS, Mercury, Nev.
72/107A - J. E. Crawford, Ch. Nuc. Engr., BuM, Wash., DC
73-75/107A - Col. L. A. Kiley, FCWT, Sandia Base, N. M.
76/107A - OIC, DOD Field Test Office, Mercury, Nev.
77/107A - FCWT Plans and Control Br., c/o USAEC, Las Vegas, Nev.
78/107A - B. P. Helgeson, SNPO-N, Las Vegas, Nev.
79/107A - J. E. Reeves, Manager, NVOO
80/107A - L. M. Groeniger, Lab. Rel. Adv., NVOO
81/107A - W. B. Carlson, A/M Admin., NVOO
82/107A - M. A. Rex, A/M Engr. & Support, NVOO
83/107A - R. H. Thalgott, A/M Opns., NVOO
84/107A - Donald R. Fowler, Chief Counsel, NVOO
85/107A - J. B. Sanders, A/M for Pacific Opns., NVOO
86/107A - C. H. Schaefer, Contracts & Supply Div., NVOO
87/107A - D. F. Pelan, Finance Div., NVOO
88/107A - J. G. LeSieur, Jr., Org. & Pers. Div., NVOO

(continued)

[redacted]

89/107A - W. D. Smith, Engr. & Constr. Div., NVOO
90/107A - V. W. Luckett, Camp Opns. Div., NVOO
91-92/107A - R. C. Emens, Support Div., NVOO
93/107A - O. H. Roehlk, Opn'l Safety Div., NVOO
94/107A - W. W. Allaire, Proj. Opns. Div., NVOO
95/107A - R. E. Miller, Prog. & Plans Div., NVOO
96/107A - H. G. Vermillion, Office of Pub. Info., NVOO
97/107A - W. R. Adair, Security Div., NVOO
98/107A - J. A. Sugden, Communications Br., NVOO
99-100/107A- W. E. Gries, Prog. Rev. Br., NVOO
101/107A - Actg. Chief, LosA Proj. Office, Los Angeles, Calif.
102/107A - Test Manager, NTSO, CP-1, Mercury, Nev.
103/107A - A/M Opns. RF
104/107A - Prog. & Plans RF
105/107A - Prog. Br. (NTS) RF
106/107A - Central M&R
107/107A - Central M&R

[redacted]

APPENDIX 1

PERSONNEL ASSIGNMENTS - PROJECT ROLLER COASTER

Assignment	Name	Parent Organization
Project Manager	James E. Reeves	NVOO
Alternate Project Manager	William A. Bonnet	NVOO
Deputy Project Managers	Robert H. Thalgott William W. Allaire	NVOO NVOO
Military Deputy	Colonel Leo A. Kiley	FC/DASA
Alternate Military Deputy		
Scientific Advisor		
Program Manager's Advisory Panel	To be announced in Operation Order as required	
DMA Liaison Officer	Lt. Col. George Alexander	DMA, AEC, Wash.
Division of Operational Safety Liaison Officer	Dr. Gordon M. Dunning	DOS, AEC, Wash.
Research Group Director	Lt. Col. James L. Dick	FC/DASA
Scientific Director	Dr. James Shreve	Sandia Corporation
Deputy Scientific Director	Lt. Col. J. Stuart Iveson	UK
ALOO Coordinator	Everett Mathews	ALOO
CH/DASA Program Advisor	Lt. Col. Jack C. Bentley	CH/DASA
Scientific Planning and Policy Group	Dr. Gordon Dunning Dr. William Otting Dr. Kenneth Stewart	DOS, AEC, Wash. DOD UK

(continued)

[redacted]

Assignment	Name	Parent Organization
Chief, Weather and Surface Radiation Prediction	Philip W. Allen	USWB, Las Vegas
Chief, Blast Prediction	Jack W. Reed	Sandia Corporation
Director, Support Division	Ray C. Emens	NVOO
Director, E&C Division	William D. Smith	NVOO
Technical Support Agencies	To be announced by Research Group Director	
Operations Coordinator (Acting)	Lt. Col. E. G. Halligan	FC/DASA
DOD Operations Coordinator	Lt. Col. E. G. Halligan	FC/DASA
Base Support Coordinator	John B. Williamson	REECo
Engineering and Construction Coordinator	To be announced	
Project Engineer, ROLLER COASTER	Paul Knowles	NVOO
DOD Support Coordinator	Lt. Col. Boggs A. Robinson	FC/DASA
Air Support Group	Announced by Commander, AFSWC	AFSWC
Radiological Safety Advisor	Arthur J. Whitman	NVOO
Safety and Fire Protection Advisor	Otto H. Roehlk	NVOO
Director, Office of Project Information	Henry G. Vermillion	NVOO
Classification Advisor	Richard H. Johnston, Jr.	NVOO

(continued)

Assignment	Name	Parent Organization
Federal Aviation Agency Liaison Representative	To be announced in Operation Order	
Communications Advisor	James A. Sugden	NVOO
Security Officer	William R. Adair	NVOO
PHS Liaison Officer Network Coordinator	Raymond Moore, M.D.	USPHS, Wash.
Counsel	Donald R. Fowler	NVOO
SS Accountability Officer	Don J. Winchester	NVOO

APPENDIX 2

OPERATIONS SCHEDULE

Presented below is the over-all operations schedule (paragraph 1) as proposed by FC/DASA in "Research Program for Evaluation of Storage, Handling and Transportation Criteria for Plutonium Bearing Weapons" dated January 15, 1963. Paragraph 2 shows the schedule outlined in letter from FC/DASA to NVOO dated January 29, 1963, requiring joint and exclusive usage of the Stonewall Flats portion of the Nellis Bombing and Gunnery Range. The Research Group Director will be responsible for submitting to NVOO revisions and/or changes as foreseen with regard to these schedules.

1. Over-all Operations Schedule

March 1, 1963	Meteorological measurements resumed.
March 1, 1963	Camp installation to accommodate 100 DOD and technical agency personnel plus support personnel as required.
March 15, 1963	Initiate construction of igloos and shot pads.
March 15, 1963	Camp installation to accommodate 150 DOD and technical agency personnel plus support personnel as required.
March 15, 1963	Begin installation of scientific array.
April 1, 1963	All scientific equipment and personnel on site and in place. Camp installation at full capacity of 300 DOD and technical agency personnel plus approximately 300 support personnel.
April 15, 1963	Shot - Double Tracks.
May 1, 1963	Shot Clean Slate No. 1 (Open shot).
May 15, 1963	Shot Clean Slate No. 2 (Igloo - 2' cover).

(continued)

May 30, 1963	Shot Clean Slate No. 3 (Igloo - 8' cover).
June 30, 1963	Terminate field experiment and submit interim reports.
December 31, 1963	Complete physical and chemical analysis.
April 15, 1964	Submit final reports.

As soon as practicable after detonation (two to three weeks), surviving animals will be returned to Kirtland AFB for completion of the long-term translocation study.

2. Joint/Exclusive Usage Schedule

FC/DASA, NAFB Joint Use	FC/DASA Exclusive Use	Item
Feb 10 - Mar 10	Mar 15 - Mar 20	De-dudding
Feb 15 - Mar 1		Surveying
Feb 15 - Mar 15		Release of pibal balloons at GZ
	Mar 15 - May 15	Metro measurements from tethered balloons
Feb 25 - Mar 15	Mar 15 - April 10	Road construction
	Mar 20 - April 10	Instrumentation station construction
Feb 15 - Mar 15		Balloon pad and camp construction
	Mar 15 - April 1	Installation of cables
	April 10 - May 15	Flight of balloon curtain
	April 15 - May 15	Double Tracks event

APPENDIX 3

OPERATIONS PLAN

To be formulated and included after criteria are received from FC/DASA.

Implementation of the following "Memorandum of Understanding" is contingent upon the mutual agreement of AEC/NVOO and Nellis Air Force Base, and the concurrence of the Sandia Area Office. Any subsequent changes or revisions made thereto will be done under the cognizance of all concerned parties.

MEMORANDUM OF UNDERSTANDING
NEVADA OPERATIONS OFFICE, U. S. ATOMIC ENERGY COMMISSION
AND
NELLIS AIR FORCE BASE
FOR
USE OF STONEWALL FLATS AREA OF NELLIS AIR FORCE RANGE
AREA R-4807 FOR OPERATION ROLLER COASTER

I. Identification of Parties:

This Memorandum of Understanding is entered into between the U. S. Atomic Energy Commission, Nevada Operations Office, (hereinafter referred to as NVOO) and the Commander, Nellis Air Force Base (hereinafter referred to as NAFB).

II. Purpose:

The purpose of this Memorandum of Understanding is to set forth clearly and concisely the agreements reached in the co-use by NAFB and NVOO, sole use by NVOO, and sole use by NAFB of the Stonewall Flats Area of the Nellis Air Force Range (hereinafter referred to as NAFR) at specific dates as detailed herein, in order that Operation Roller Coaster may be properly fielded with minimal interference to the NAFB in utilization of the Stonewall Flats Area, R-4807 of the NAFR.

III. References:

A. Letter, James E. Reeves, Manager, NVOO to Brigadier General Boyd Hubbard, Commander, NAFB, December 5, 1962, subject, "Use of Portion of Nellis Air Force Range."

B. Letter, Colonel Jack S. Jenkins, Deputy Commander, NAFB to James E. Reeves, Manager, NVOO, 11 December 1962, concerning the forwarding of letter (reference A above) through command channels for appropriate action.

C. Letter, James E. Reeves, Manager, NVOO to Brigadier General Boyd Hubbard, Commander, NAFB, December 21, 1962, subject, "Use of Portion of Nellis Air Force Range."

D. Conference held at NAFB, January 7, 1963, attended by representatives of NAFB, 12th AF, Hq., USAF, CH/DASA, FC/DASA, USAEC/DMA, U. S. Army Corps of Engineers and AEC/NVOO, concerning use of Stonewall Flats area of Nellis Air Force Range for Operation Roller Coaster.

E. Conference held at USAF Hq., Washington, D. C., January 11, 1963, attended by FC/DASA, USAF and AEC representatives concerning use of Stonewall Flats area of Nellis Air Force Range for Operation Roller Coaster.

F. Conference held at Nellis Air Force Base, January 23, 1963, to work out agreement concerning joint use of Stonewall Flats area of Nellis Air Force Range, attended by representatives of NAFB, NVOO, ALOO, and FC/DASA.

IV. General:

A. Operation Roller Coaster is a series of biophysical and scavanging tests sponsored jointly by the United States and the United Kingdom to determine mutually acceptable criteria for storage, transportation and handling of plutonium bearing weapons, and to investigate the biological hazards of scattered plutonium. It is a two phase program conducted within the following geodetic coordinates:

1. Double Tracks (biophysical and physical measurements):

   37° 33' N to 37° 50' N
   116° 46' W to 117° 05' 30" W

2. Clean Slate (physical measurements):

   37° 33' N to 37° 50' N
   116° 30' W to 116° 46' W

The area within coordinates 116° 30' W to 116° 55' W and 37° 33' N to 37° 50' N, within the Tonopah Test Range, was made available to the AEC by Air Force Permit SPRF-(S)-727. By AEC-ALOO, USAF Memorandum of Understanding, Contract AT(29-2)-798 the USAF is permitted use of the southwest corner of the area.

B. The Manager, NVOO, will conduct Operation Roller Coaster in accordance with established procedures published in the NTSO-SOP. Field Support necessary for Operation Roller Coaster will be provided by NVOO.

C. Overall program direction of Operation Roller Coaster has been assigned to FC/DASA, with scientific guidance by Sandia Corporation, referred to hereafter as Research Group.

D. The Manager, NVOO (Project Manager, Roller Coaster) will be the over-all coordinator of Operation Roller Coaster and will coordinate with all associated agencies involved.

E. Contact with NAFB for coordination of use of the Stonewall Flat area, and such target areas nearby as require coordination during use periods, will be accomplished by NVOO through its Project Operations Division. An Operations Officer from the Project Operations Division will be located at the Tonopah Test Range during Operation Roller Coaster as required. This representative will be in continuous liaison with NVOO and the Manager, Tonopah Test Range, as well as with the Research Group and supporting agencies.

F. The above information is furnished herein as general knowledge to assist the parties making this agreement toward a basic understanding of the responsibilities in conduct of Operation Roller Coaster.

V. <u>AGREEMENT BETWEEN NAFB AND NVOO:</u>

A. The following items were agreed upon at conference of January 23, 1963, reference III F above, and are incorporated herein as the basic premise of this Memorandum of Understanding.

1. To properly field Operation Roller Coaster in the Stonewall Flats area of R-4807, NAFR, it is necessary that usage of Target Area I-5 be shared by NAFB and NVOO for a period of time, followed by a period of exclusive use by NVOO. These periods are set forth hereunder, and as all final dates are flexible in accordance with the time frame of the operation, such final dates are subject to extension if and when necessary. Therefore, NAFB agrees to:

[redacted]

a. Joint use of Target Area I-5 from February 1 through March 15, 1963.

(1) Coordination of joint use during this period to be between Project Operations Division, NVOO, (phone 385-2611, extensions 93, 94, 95), and Scheduling Branch, 4520th Combat Crew Training Group (CCTG), NAFB (phone 384-1800, extension 2-2825) on a continuing basis.

(2) NVOO may use the area around Target I-5 at all times not scheduled by NAFB.

(3) When NAFB is using Target I-5, NVOO will withdraw a minimum distance of two (2) miles from Target I-5.

b. Exclusive use of Target Area I-5 by NVOO from March 15 through May 15, 1963.

c. Joint use of Target Areas I-1 and I-3 from February 1 through February 15, 1963.

(1) Coordination of joint use during this period to be between Project Operations Division, NVOO (phone 385-2611, extensions 93, 94, 95) and Scheduling Branch, 4520th CCTG, NAFB (phone 382-1800, extension 2-2825) on a continuing basis.

(2) NVOO may use the areas around Targets I-1 and I-3 at all times not scheduled by NAFB.

(3) When NAFB is using Targets I-1 and I-3, NVOO will withdraw a minimum distance of two (2) miles from these targets.

d. NVOO will have exclusive use of Target Areas I-1 and I-3 from February 15 through May 15, 1963.

[redacted]

[redacted]

e. NAFB may continue to use Target Area I-4 with a change of approach path to avoid Target Area I-5 if such use is determined by NAFB to be desirable.

(1) If Target Area I-4 is found to be desirable by NAFB, NVOO will be so informed by procedure established in paragraph a (1) above.

f. NAFB may fly over Tonopah Test Range (TTR) east of Mellan, when Target Area I-5 is used exclusively by NVOO (March 15 through May 15, 1963).

(1) Flight path is to be determined by NAFB with advice of said flight path furnished to NVOO by procedure established in paragraph a (1) above.

(2) NVOO will coordinate these flyovers between NAFB and TTR.

VI. Safety Considerations:

A. Regarding NAFB use of Target Area I-4, tethered balloons will be flown to gather data between April 10 and May 15, which could affect NAFB use of Target I-4 through hazard to safety of pilots. It is planned that these balloons will be flown as follows at distances given and from ESE to SSW from coordinates 37° 42' 20" N and 116° 59' 20" W:

1. One balloon at a distance of 2,500 ft. from reference point and at an altitude of 4,000 ft. above ground.

2. One balloon at a distance of 13,000 ft. from reference point and at an altitude of 4,000 ft. above ground.

3. Ten balloons on an arc and at a distance of 50,000 ft. from reference point, all at an altitude of 1,000 ft. above ground.

In the event there is any change in this array which would increase hazard to aircraft NVOO will advise NAFB of the change, in writing.

[redacted]

B. In addition to the above, similar balloon arrays out to 13,000 feet, will be flown ESE to SSW in the Cactus Flat area (after the Stonewall Flat operation has been terminated) from each of the following sets of coordinates:

1. 37° 42' 10" N - 116° 39' 30" W

2. 37° 45' 30" N - 116° 37' 00" W

3. 37° 45' 15" N - 116° 41' 00" W

C. In regard to joint use of Target Area I-5, tethered weather balloons will be flown between March 1 and March 15, 1963 at distances of 1,500 ft. NE and NW of coordinates 37° 42' 20" N and 116° 59' 20" W at altitudes of 750 feet and 1,000 feet which could be a safety hazard to NAFB pilots attacking Target I-5.

D. Tethered weather balloons will be flown at altitudes of 750 feet and 1,000 feet in Cactus Flats in the vicinity of 37° 45' 15" N and 116° 41' 00" W during the period April 15 to June 1, 1963.

E. During joint use periods cited herein, and particularly during the period February 15 through March 15, 1963, certain activities by NVOO will be conducted in the Stonewall Flats area. These activities include, but are not limited to, dedudding of Target Areas I-1 and I-3, surveying, road, scientific and camp construction, and collection of weather data.

VII. Upon completion of the experiment NVOO will return the area to a condition which will not interfere with the USAF's use of it and will not endanger life or property.

[redacted]

VIII. Effective Date, Modification and Termination:

This Memorandum of Understanding is effective February 1, 1963 and will continue in effect until terminated by completion of the experiment, or by mutual agreement of NVOO and NAFB. Any modification to this agreement will be accomplished only upon mutual written consent of the parties hereto.

U. S. ATOMIC ENERGY COMMISSION
NEVADA OPERATIONS OFFICE

By James E. Reeves
James E. Reeves, Manager

NELLIS AIR FORCE BASE, NEVADA

By _____
Boyd Hubbard, Jr., Brig.Gen.USAF
Commander

U. S. ATOMIC ENERGY COMMISSION
ALBUQUERQUE OPERATIONS OFFICE
SECTIONS OF THIS AGREEMENT WHICH
PERTAIN TO TONOPAH TEST RANGE
HAVE THE CONCURRENCE OF

_____
W. Lee Hancock, Area Manager
Sandia Area Office

[redacted]

APPENDIX 4

PUBLIC INFORMATION PLAN

1. Purpose

To provide a unified inter-agency plan for controlling, coordinating, reviewing and issuing public information in the field concerning Operation ROLLER COASTER, a joint Atomic Energy Commission-Department of Defense project for high explosive detonations in the AEC's Tonopah Test Range and the DOD's Las Vegas Bombing and Gunnery Range.

2. Principles

Issuance of public information concerning Operation ROLLER COASTER by participating personnel will be controlled by the Joint Office of Information, which will be the single point for issuance of such information to the public. Guidelines and restrictions provided in the 3100 section of the Nevada Test Site Organization Standard Operating Procedure will apply.

3. Organization

The Joint Office of Information for Operation ROLLER COASTER will be staffed by the AEC and DOD. The Director will be the Director of Information for the Nevada Operations Office, Henry G. Vermillion. The Associate Director will be the Public Information Officer for Weapons Effects Tests, Field Command/Defense Atomic Support Agency, Major Duke Shearin. Staffing will be as required from the two agencies.

4. Procedures

a. Observers

(1) No news media observer program is contemplated. Should such a program prove desirable, its conduct will be coordinated with higher headquarters by the Joint Office of Information, and it will be administered by the JOI.

(2) The official observer program will be administered by the JOI. Because of the nature of the program, official observers will be held to a minimum.

(continued)

b. Photography

As in the case of written material, issuance of photographs on ROLLER COASTER to the public will be controlled by the JOI. There will be no issuance without prior JOI coordination, which may require considerable time to effect.

c. Accidents and Incidents

The JOI will be notified promptly of serious accidents to personnel, incidents involving any exposures exceeding accepted limits for personnel, and accidents involving any considerable loss or damage to property. Such matters may be reported publicly by the JOI when in its judgment reporting is required under AEC-DOD policy.

[redacted]

APPENDIX 5

ENGINEERING, CONSTRUCTION, AND SUPPORT PLAN

To be formulated and included after criteria are received from FC/DASA.

[redacted]

GENERAL SUPPORT REQUIREMENTS

The following requirements are based on information extracted from "Research Program for Evaluation of Storage, Handling, and Transportation Criteria for Plutonium Bearing Weapons, Operation ROLLER COASTER", dated January 15, 1963, and on points discussed at the ROLLER COASTER planning meeting of January 21, 1963. Specific requirements and plans will be incorporated into the Planning Directive as Appendix 5, "Engineering, Construction, and Support Plan", upon receipt of detailed criteria from FC/DASA on or about February 15, 1963. The following criteria, particularly camp requirements and locations, should be considered for planning purposes only.

1. Logistical Support

a. Housing

Main camp (Coordinates 37° 53' N, 116° 47' W)

300 DOD and technical agency personnel (approximate)
300 Support personnel (approximate)
600 Total

Camp must be competent to serve approximately 150 DOD and technical agency personnel plus support personnel as required by March 15, 1963. Peak load will be April 15, 1963. Camp is not required after June 30, 1963. It is presently planned to move the Area 5 camp to this location.

b. Messing

(1) Main camp - All personnel morning and evening. Number of personnel for noon messing must be determined.

(2) Stonewall forward camp - Coordinates 37° 43.3' N, 116° 49' W with alternate site at 37° 47.8' N, 116° 58' W. Approximately 250 DOD and technical agency personnel (noon only). Support personnel for noon messing must be determined. Maximum utilization - April 1 to April 30.

(continued)

(3) Cactus forward camp - Coordinates 37° 43' N, 116° 35' W. Approximately 150 DOD and technical agency personnel (noon only). Support personnel for noon messing must be determined. Maximum utilization April 15 - June 2.

Note: The possibility of providing sack lunches or mobile lunch trailers in lieu of forward camps for feeding personnel in the forward areas is to be explored jointly by FC/DASA and NVOO.

c. Office Space

(1) Main camp - 100 DOD and technical agency personnel. Support personnel must be determined.

(2) Stonewall forward camp - 75 DOD and technical agency personnel. Support personnel must be determined.

(3) Cactus forward camp - 45 DOD and technical agency personnel. Support personnel must be determined.

d. Water Requirements

Water requirements to support camps, personnel, laboratory trailers, and animals (approximately 84 dogs, 84 burros, and 132 sheep) must be determined. Animals are scheduled to be received during the period March 3 to March 15.

e. Recreation

Area 5 camp recreation facilities will suffice.

f. Medical Facilities

It is anticipated that FC/DASA will provide medical corpsmen. Doctor(s) and other medical requirements must be determined.

g. Transportation and POL

Approximately 60 wheeled vehicles will be required by the DOD.

(continued)

Vehicle maintenance facilities are also required. Other vehicles and motor pool requirements must be determined.

h. Construction

(1) Road construction requirements must be specified by FC/DASA before construction can commence.

(2) Main installation construction.

(a) One 1-foot-thick concrete pad 20' x 20' with a 1-inch-thick steel plate measuring 8' x 8' placed on the concrete pad. This will be located at GZ for Double Tracks.

(b) One 6-inch-thick reinforced concrete pad 24' x 24', located at Clean Slate GZ No. 1.

(c) One DASA-type storage igloo measuring 12' x 25' covered with 2 feet of soil, located at Clean Slate GZ No. 2.

(d) One DASA-type storage igloo measuring 12' x 25' covered with 8 feet of soil, located at Clean Slate GZ No. 3.

(e) Tower construction requirements must be specified by FC/DASA.

(f) Instrumentation construction requirements must be specified by FC/DASA.

Note: It is anticipated that the igloos will be purchased from Armco by REECo.

i. Other Logistical Support

(1) Animal shelter requirements must be specified by FC/DASA. Present plans indicate that the dogs will be housed in trailers to protect them from the rigors of the desert climate. It is anticipated that the other animal shelters can be constructed at the Tonopah Test Site. It is planned

(continued)

to move animals to and from arrays on hayracks.

(2) Procurement and handling of approximately 2,500,000 cubic feet of helium. Storage for 500,000 cubic feet at any one time will be required. Director, Support Division, to make necessary arrangements for procurement and storage.

2. Administrative Support

a. Communications as required under the NTSO concept for this program. Other communication requirements are to be specified by FC/DASA.

b. Power requirements are to be specified by FC/DASA.

c. Wiring network requirements are to be specified by FC/DASA.

APPENDIX 6

OPERATIONAL SAFETY PLAN

To be formulated and included after criteria are received from FC/DASA.

APPENDIX 7

SECURITY PLAN

To be formulated and included after criteria are received from FC/DASA.

APPENDIX 8

SCIENTIFIC PROGRAM - OPERATION ROLLER COASTER

Operation Roller Coaster research program consists of twelve projects under the supervision of the Scientific Director, Dr. J. D. Shreve (Sandia Corp.) and his deputy, Lt. Colonel J. S. Iveson (UK). The staff is also augmented by assistants for specialized scientific areas and a "Referee Team" for evaluating analytical procedures. A brief outline of each project follows. For more complete details, refer to "Research Program for Evaluation of Storage, Handling, and Transportation Criteria for Plutonium Bearing Weapons, Operation Roller Coaster", dated January 15, 1963.

1. Soil Deposition (Project No. 2.1)

   The objective of this project is to determine the amount, characteristics, and distribution of plutonium in and around the crater, blast area, and throw-out area.

   This will be accomplished by pre-positioning throw-out "catchers" up to about a 400-foot radius from ground zero to obtain samples containing only structure soil and plutonium. After detonation, samples will be collected from the "catcher" and evaluated for plutonium content.

2. Air Sampling Measurements (Project No. 2.2)

   The objectives of this project are: (a) to determine the size and activity of plutonium-bearing particles and their spacial distribution in the cloud and near the surface; (b) to determine, at selected locations, the time variability of these measurements; (c) to provide a sample collection service for other projects; (d) to provide appropriate data for studies to refine existing, and develop new cloud models.

   Air sampling will be accomplished by the employment of fixed and mobile air sampling arrays placed throughout the predicted downwind path of the cloud. Other sampling devices will be mounted on balloon curtains at various locations. The arrangement of the balloon curtains are shown in Annexes A and B of this Appendix. These two curtains will be used on all four shots. An additional curtain (Annexes C and G) will be used on Double Tracks. The mobile sampling array is shown in Annex D. The fixed surface instrument arrays are shown in

Annexes E and F.

3. Fallout Sample Collections (Project No. 2.3)

The objective of this project is to make collections of the plutonium fallout to determine the total plutonium deposited on the ground, the concentration per unit area, concentration versus time of deposit, and the particle size distribution.

The objective will be accomplished by locating fallout sample collectors throughout the area (see Annexes E and F) and post-shot collecting and analyzing of the sample obtained.

4. Micrometeorological Measurements (Project No. 2.4)

The objectives of this project are: (a) to define meteorological parameters in the proposed test area sufficiently to place technical equipment and structures for most effective use of probable weather for cloud development, travel, and the fallout process; to minimize weather delays and to provide an estimate of the meteorological problems for planning and forecasting; (b) to provide meteorological support, including observations and forecasts for pre-event technical operations and for the safety program; (c) to provide current "up-to-the-minute" interpretation of the meteorological conditions for shot derisions and movement of field arrays; (d) to document for each event the immediate pre-event and sufficient post-event winds and temperatures, both surface and aloft, to provide time and space detail for correlation with measurements of cloud dimensions and dispositions; (e) to collect data on a daily basis to permit a study of the relative meteorological parameters for the type terrain.

Objectives will be accomplished by collecting data relating to surface winds, winds aloft and termperatures surface and aloft. Measurements will be made by instruments mounted on towers, instruments mounted on balloons, radar observations, and studying the characteristics of released balloons. Data obtained will be related to fallout patterns.

Initial phases of the observation program began on October 23, 1962. Measurements will continue through the documentation

period for each event.

5. Alpha Survey (Project No. 2.5)

The objectives of this project are: (a) to provide large area radiac survey of the plutonium contaminated area and establish contamination level contours; (b) to correlate, by chemical analysis, plutonium radiac meter readings with absolute surface levels of plutonium depositions; (c) to provide data concerning distribution and concentration of plutonium on the ground in support of other projects and provide a higher sampling density than is practicable by radiochemistry alone.

The objectives will be accomplished by establishing an alpha survey grid as indicated in Annexes E and F. Brushed concrete pads will be placed at several locations for post-shot survey by monitoring teams.

6. Special Particulate Characteristics (Project No. 2.6)

The objective of this project is to provide a capability to investigate special characteristics of plutonium - uranium bearing particles formed during a one-point detonation of a nuclear weapon.

The objective will be accomplished by employing special collection techniques such as water-filled collection vessels, electrostatic precipitators, and other diversified collection equipment in limited numbers at specific locations to obtain samples other than those collected in the normal grid array. The samples will then be analyzed by very rigorous scientific techniques to obtain the desired information.

7. Balloon Array (Project No. 2.7)

The objectives of this project are: (a) to provide a mobile vertical support mechanism suitable for positioning cloud sampling instrumentation to intercept the cloud at several locations downwind from the source; (b) to provide a vertical support for meteorological instrumentation at two fixed locations in each experimental area.

The Project Officer will be responsible to the Research Group Director for all phases of procurring and operating all balloons, riggins, associated power distribution systems, and

safety throughout all phases of balloon array operations.

8. Off-Site Survey (Project No. 2.8)

The objectives of this project are: (a) to provide data on the low-level distribution of plutonium beyond the limits of the experimental grid used in Operation Roller Coaster: (b) to provide data that will aid in insuring that the off-site population is not exposed to significant plutonium contamination; (c) to provide additional scientific input that will allow a more accurate accounting procedure for total plutonium distribution.

The objectives will be accomplished by instrumenting off-site locations to a 100-mile radius with fallout collection media and air sampling equipment. In addition, the off-site rad-safe group will provide samples from each station around the test site. Collected samples will undergo laboratory analysis.

9. Biomedical Studies (Project No. 4.1)

The objectives of this project are: (a) to determine the initial intake, lung burden and early clearance of deposited inhaled plutonium in three species of animals; (b) to determine the translocation throughout the animal's body of inhaled plutonium and elimination as influenced by time following exposure; (c) to relate the uptake and retention of the aerosal by animals to sampling by physical measurements; (d) to evaluate by biophysical measurements the radiation exposure to man resulting from the accidental non-nuclear detonation of a plutonium-bearing weapon.

Objectives will be accomplished by studying the effects of plutonium on animals (burros, sheep and dogs) that have been located at specified ranges from ground zero. Effects studies, including periodic sacrifice of a certain number of each species of animals will follow. See Annex H for mobile biological sampling array.

10. On-Site Laboratory (Project No. 5.1)

The objectives of this project are to provide: (a) sample collector preparation; (b) on-site calibration of instrumentation; (c) sample retrieval and packaging; (d) on-site instrumentation repair and maintenance; (e) on-site counting of selected samples;

(f) on-site chemical analysis of selected samples; (g) decontamination of instrumentation for subsequent experiments; (h) animal sacrifice and collection of appropriate biological specimens.

The laboratory facility will consist of 10 trailers with specialized equipment as required and located in the immediate vicinity of the control point.

11. Radiobiological Analysis (Project No. 5.2)

The objective of this project is to provide accurate laboratory analysis of animal tissue, bone material, feces, urine, and other animal associated samples for plutonium content in support of the biological measurements portion of the Double Tracks event.

A referee team will be formed to renew continuously the work of the various laboratories throughout the analysis program to ensure correct laboratory techniques.

12. Radiochemical and Physiochemical Analysis (Project No. 5.3)

The objective of this project is to provide large scale laboratory analysis of soil, air sample, filters, and fallout samples for plutonium and uranium content for other projects of Operation Roller Coaster.

A referee team will be formed to review continuously the work of the various laboratories throughout the analysis program to ensure correct laboratory techniques.

[redacted]

APPENDIX 8

ANNEX A

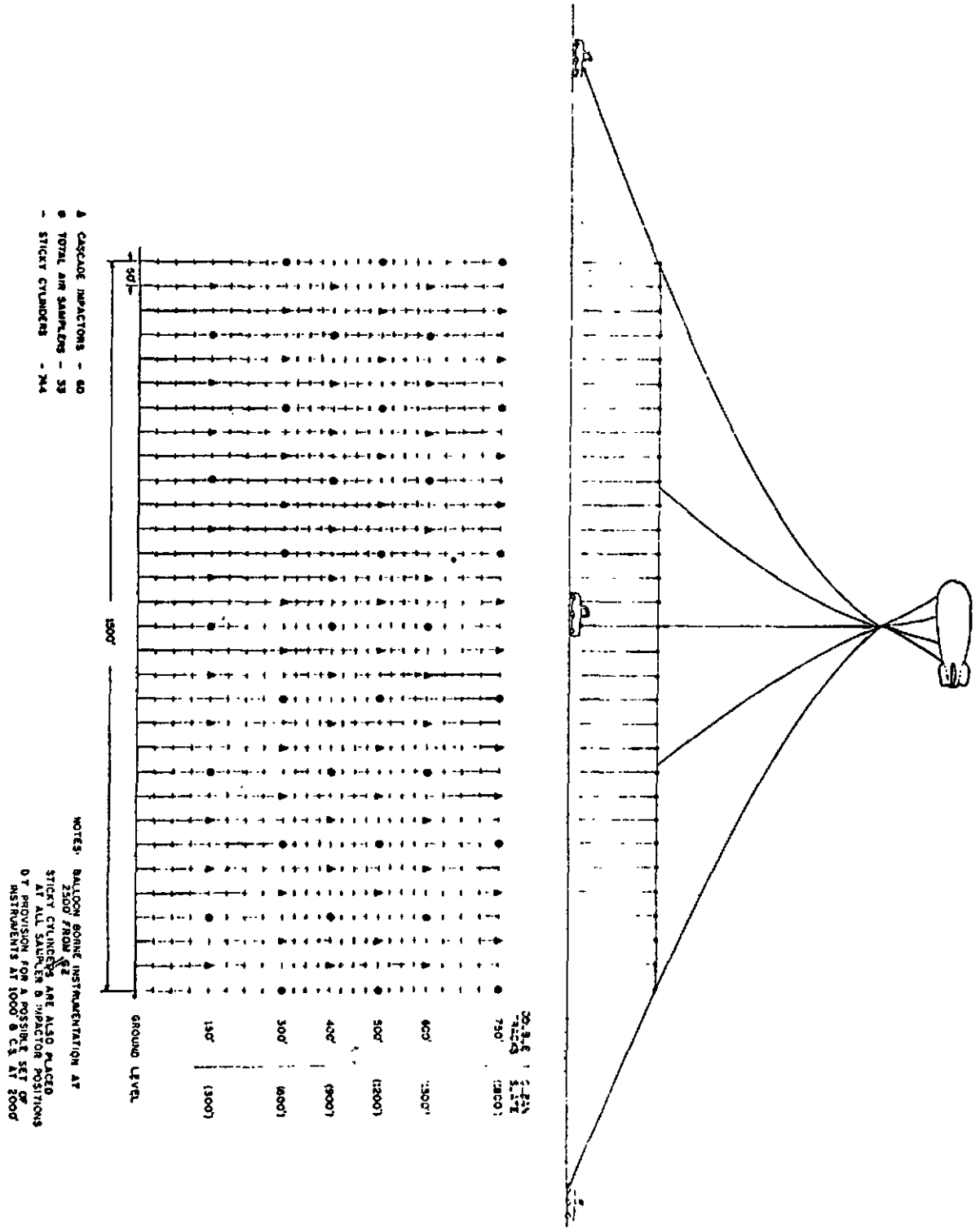

Figure 8. Details of balloon certain at 2,500-foot release.

[redacted]

[redacted]

APPENDIX 8

ANNEX B

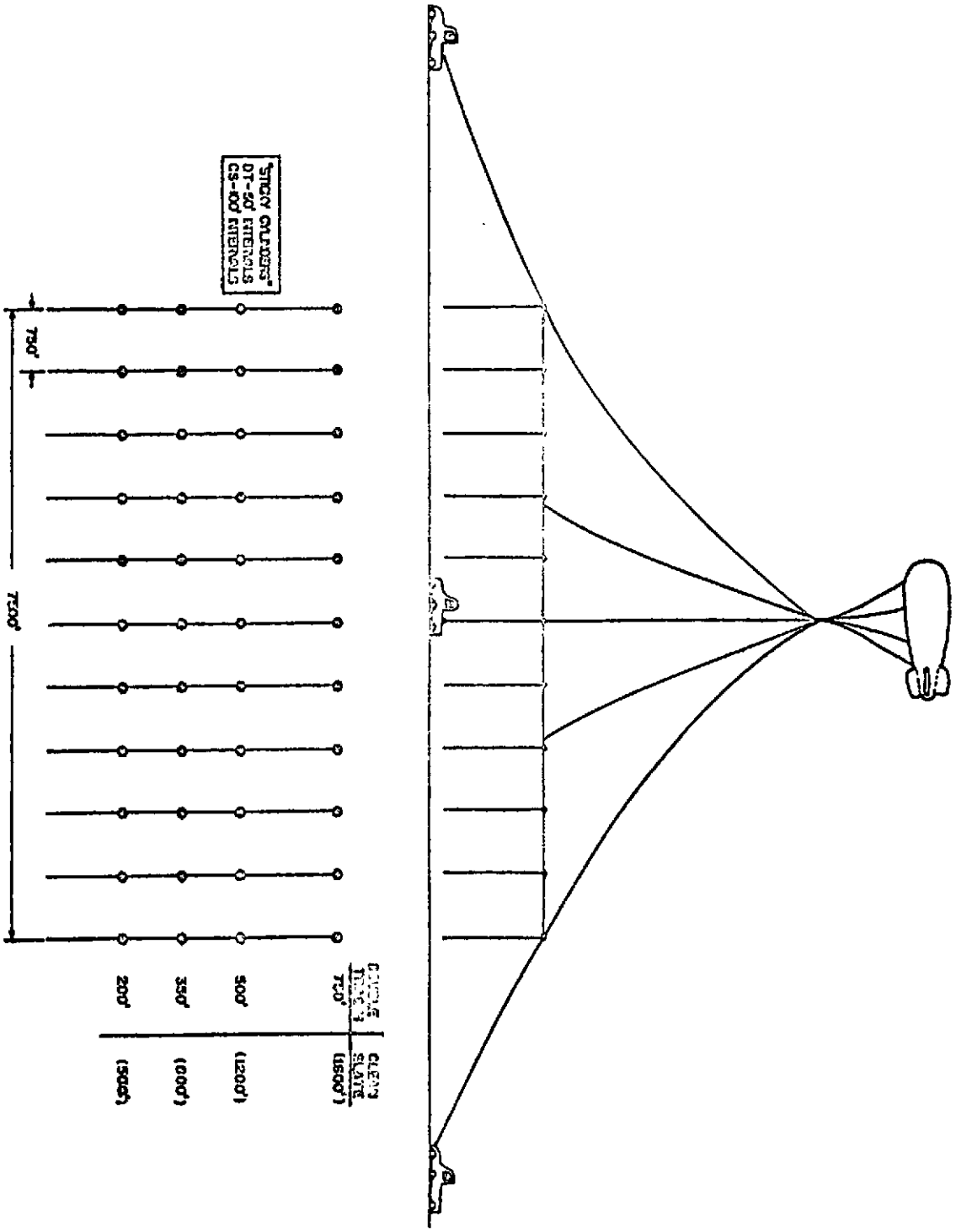

Figure 7. Details of balloons c[illegible] at 13,000-foot radius.

[redacted]

[redacted]

APPENDIX 8 ANNEX C

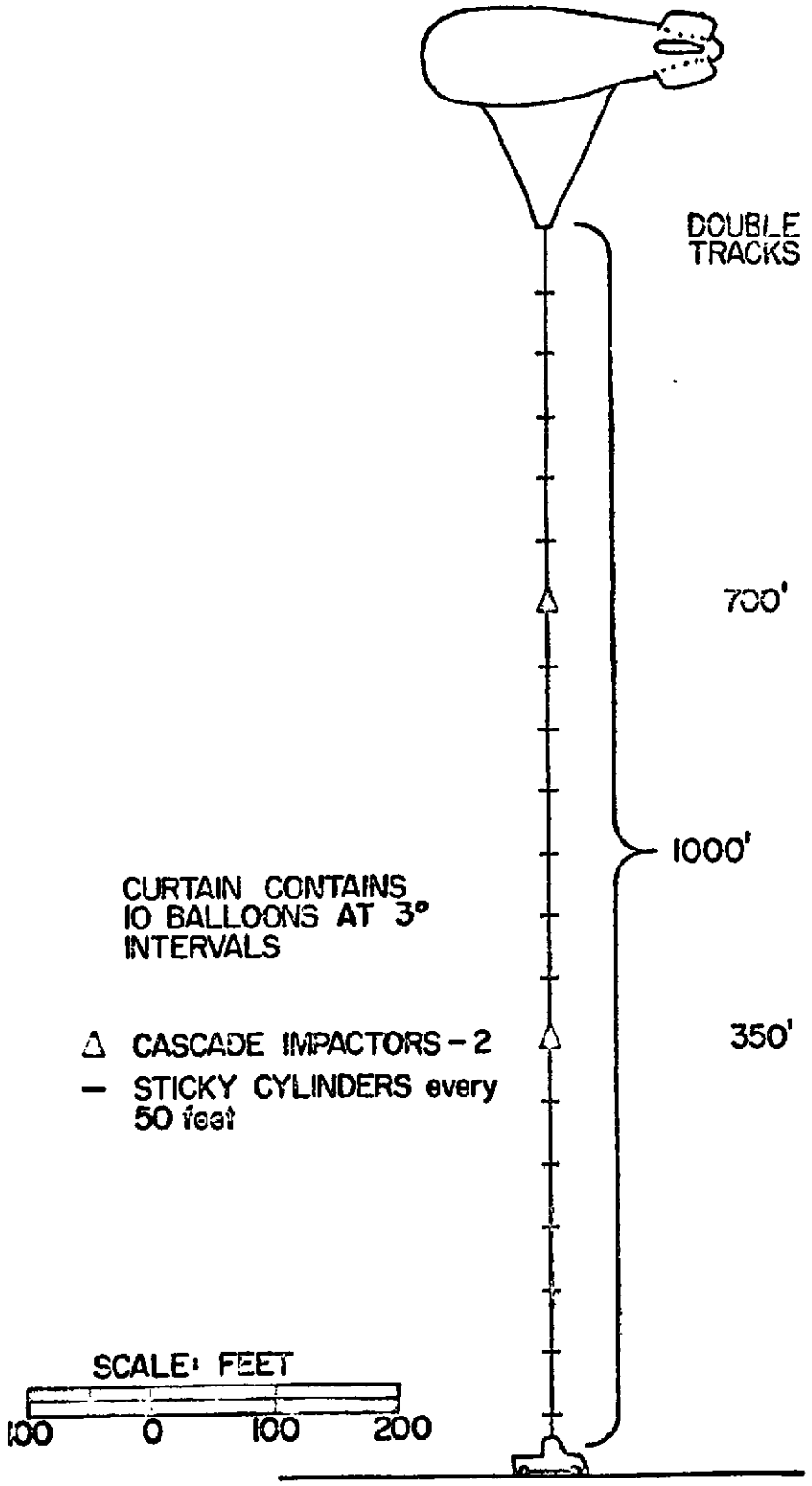

Figure 8. Details of balloon curtain at 50,000-foot radius.

[redacted]

[redacted]

APPENDIX 8

ANNEX D

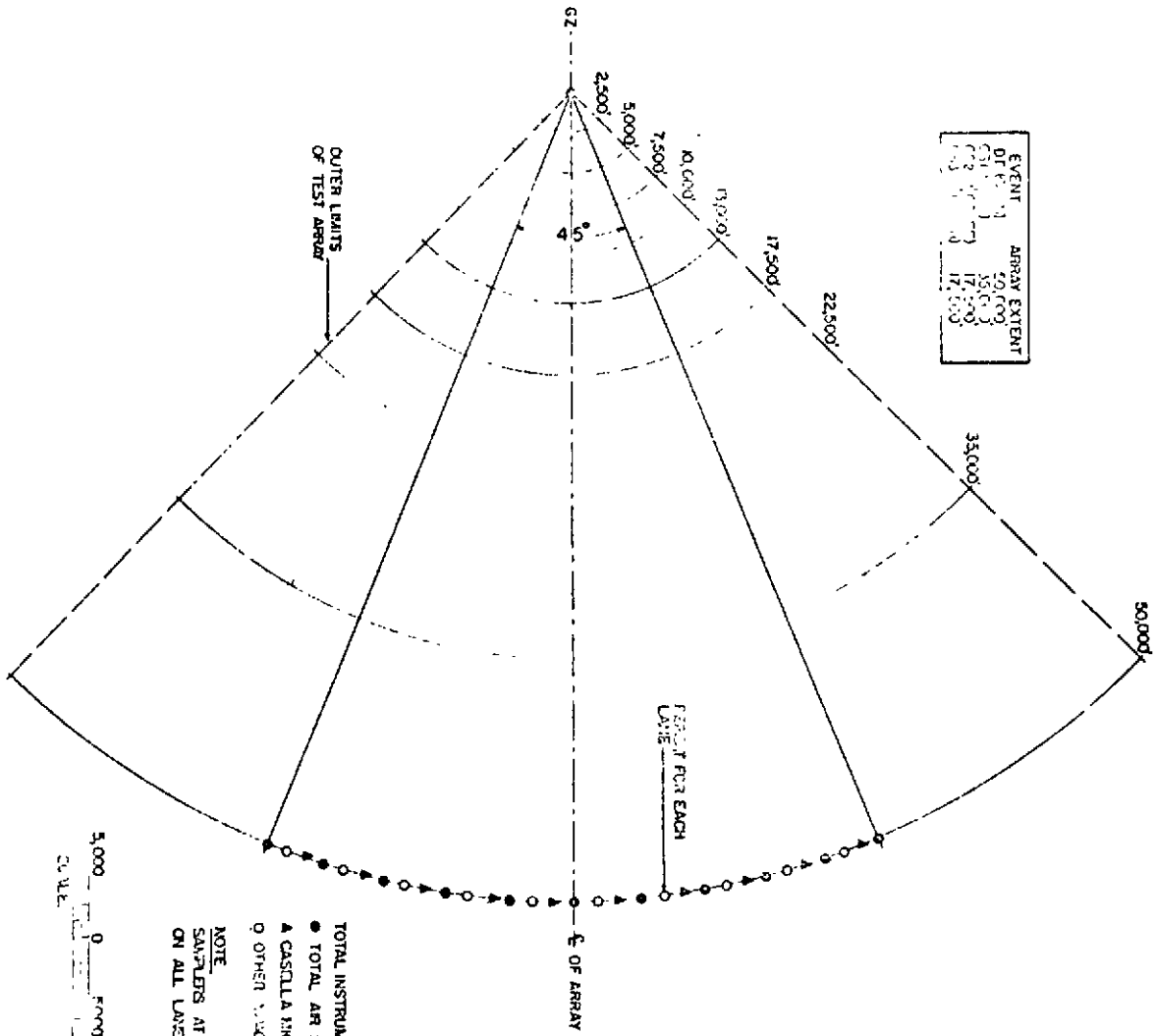

Figure 3. Mobile surface instrument array (+2,500 to +50,000 feet).

[redacted]

[redacted]

APPENDIX 8

ANNEX E

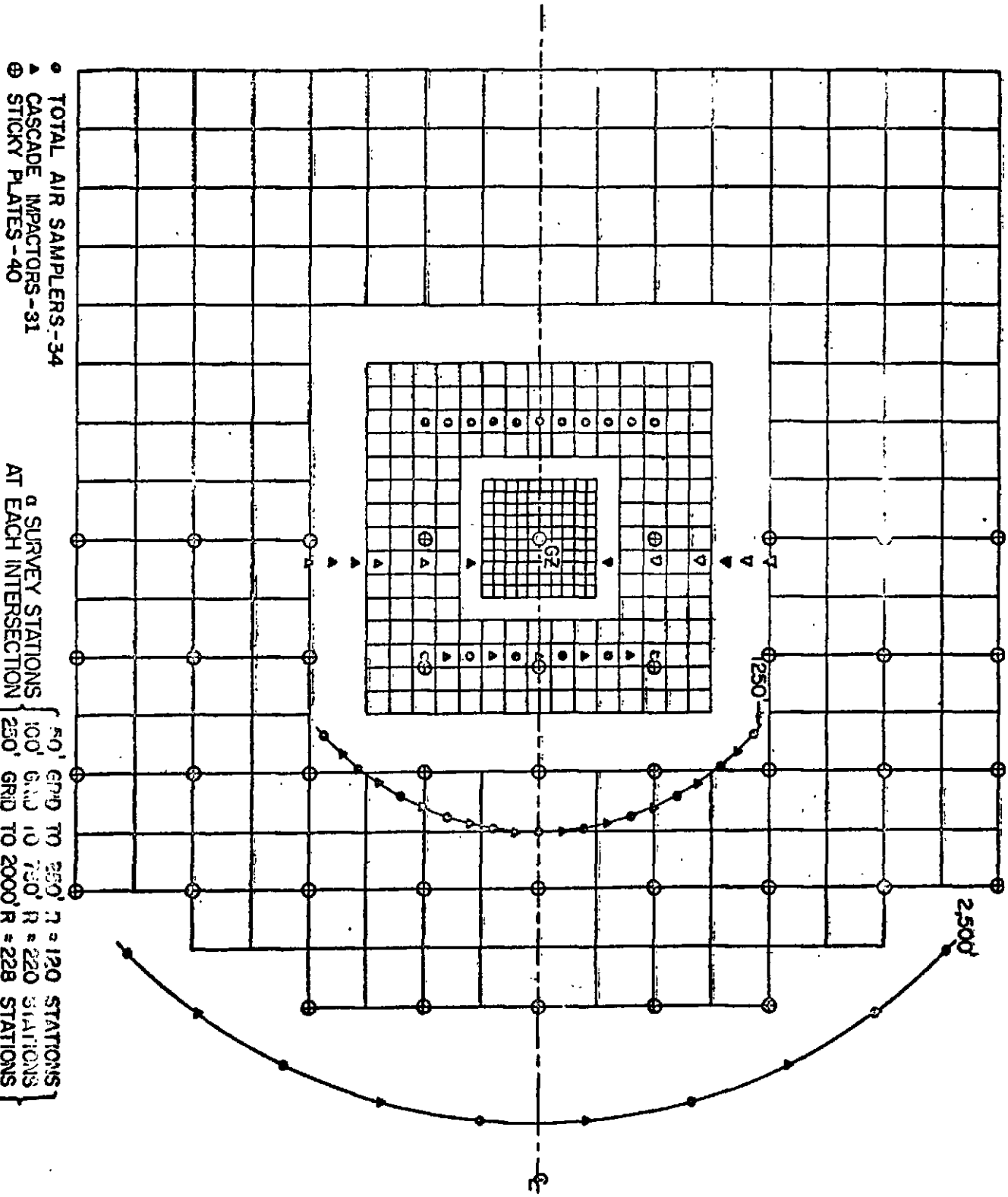

Figure 1. Fixed surface instrument array (-2,000 to +2,500 feet).

[redacted]

[redacted]

APPENDIX 8 ANNEX F

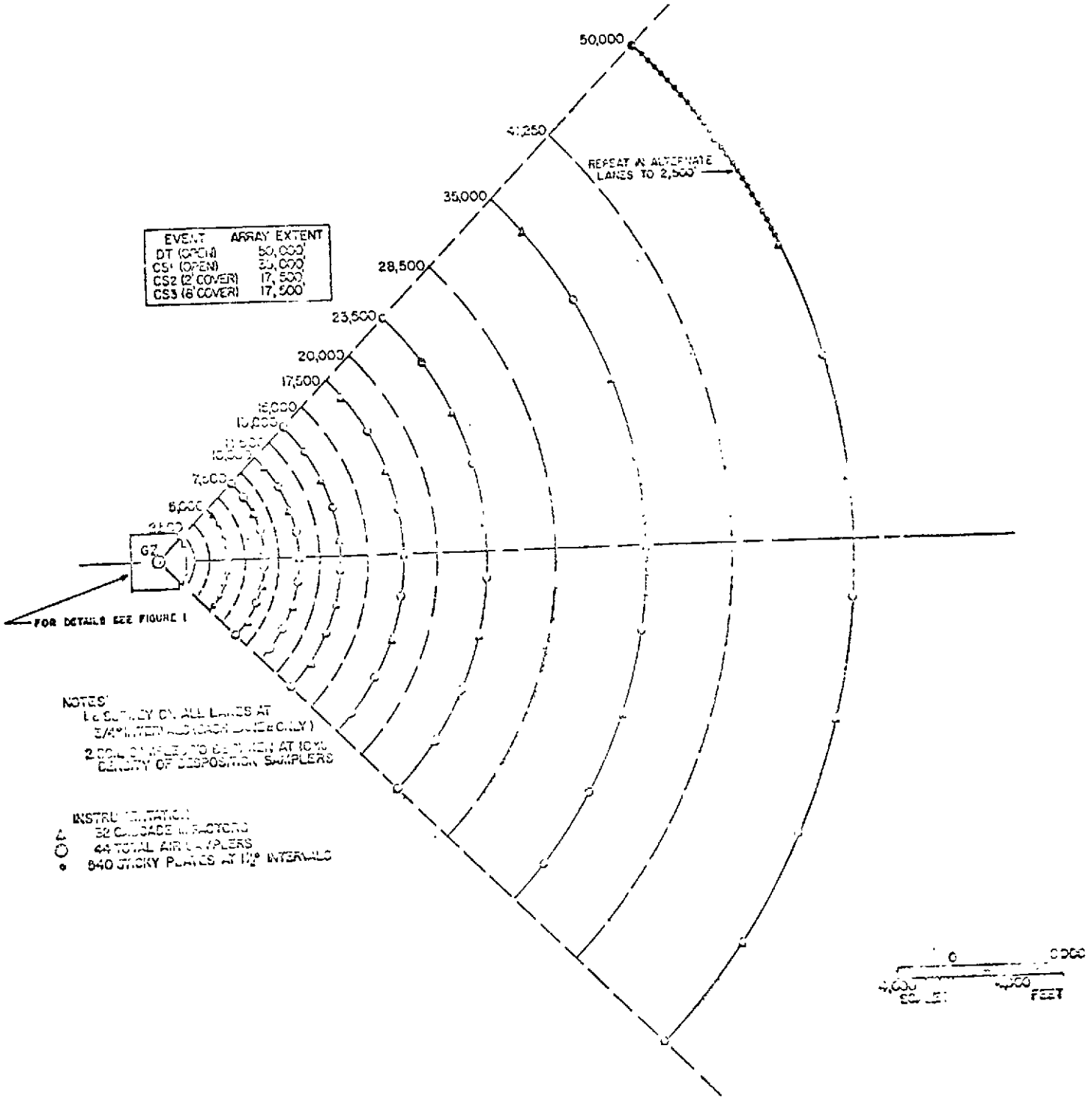

Figure 2. Fixed surface instrument array (+2,500 to +50,000 feet).

[redacted]

[redacted]

APPENDIX 8

ANNEX G

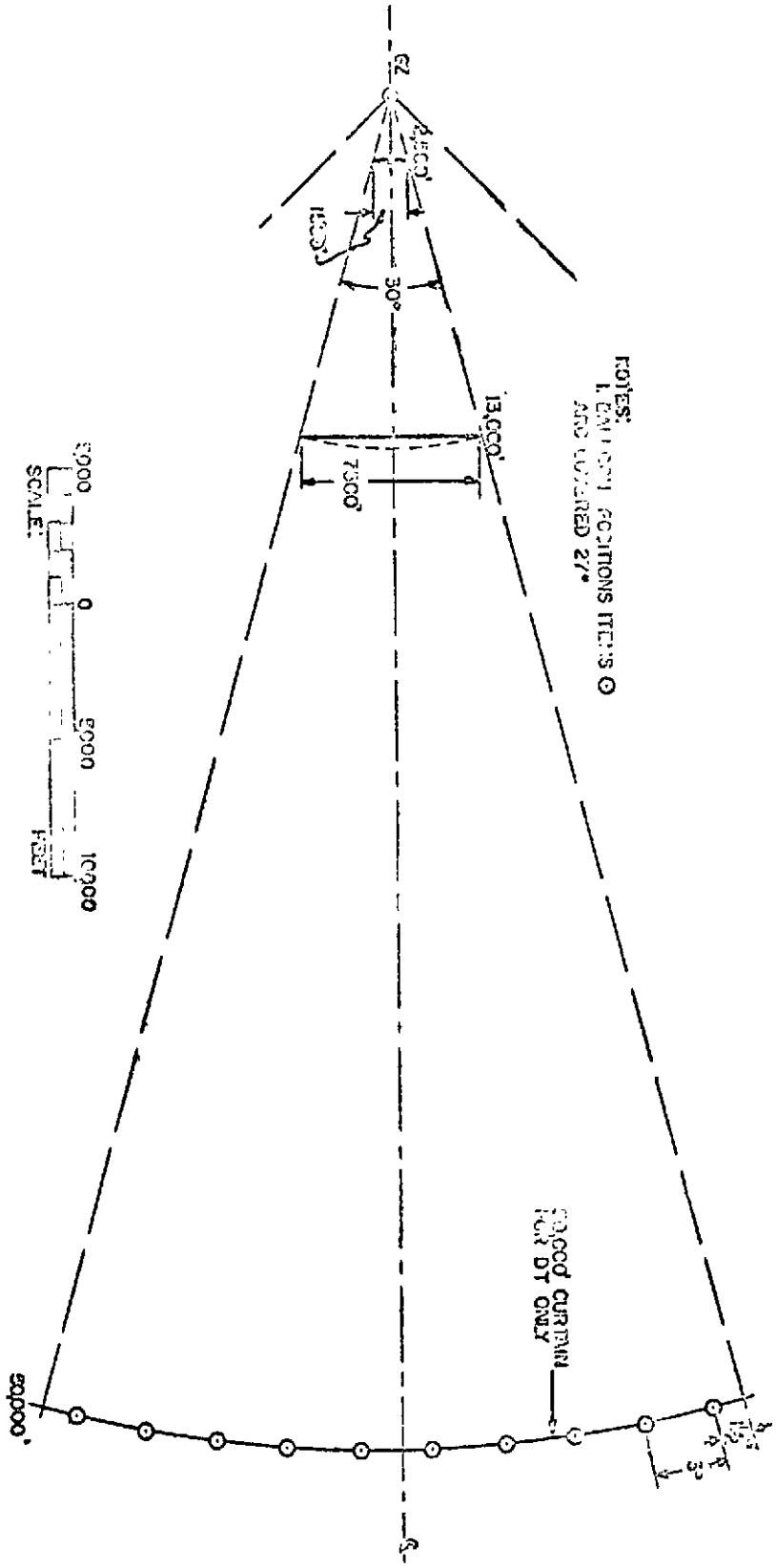

Figure 5. Mobile balloon supported instrument array.

[redacted]

[redacted]

APPENDIX 8 ANNEX H

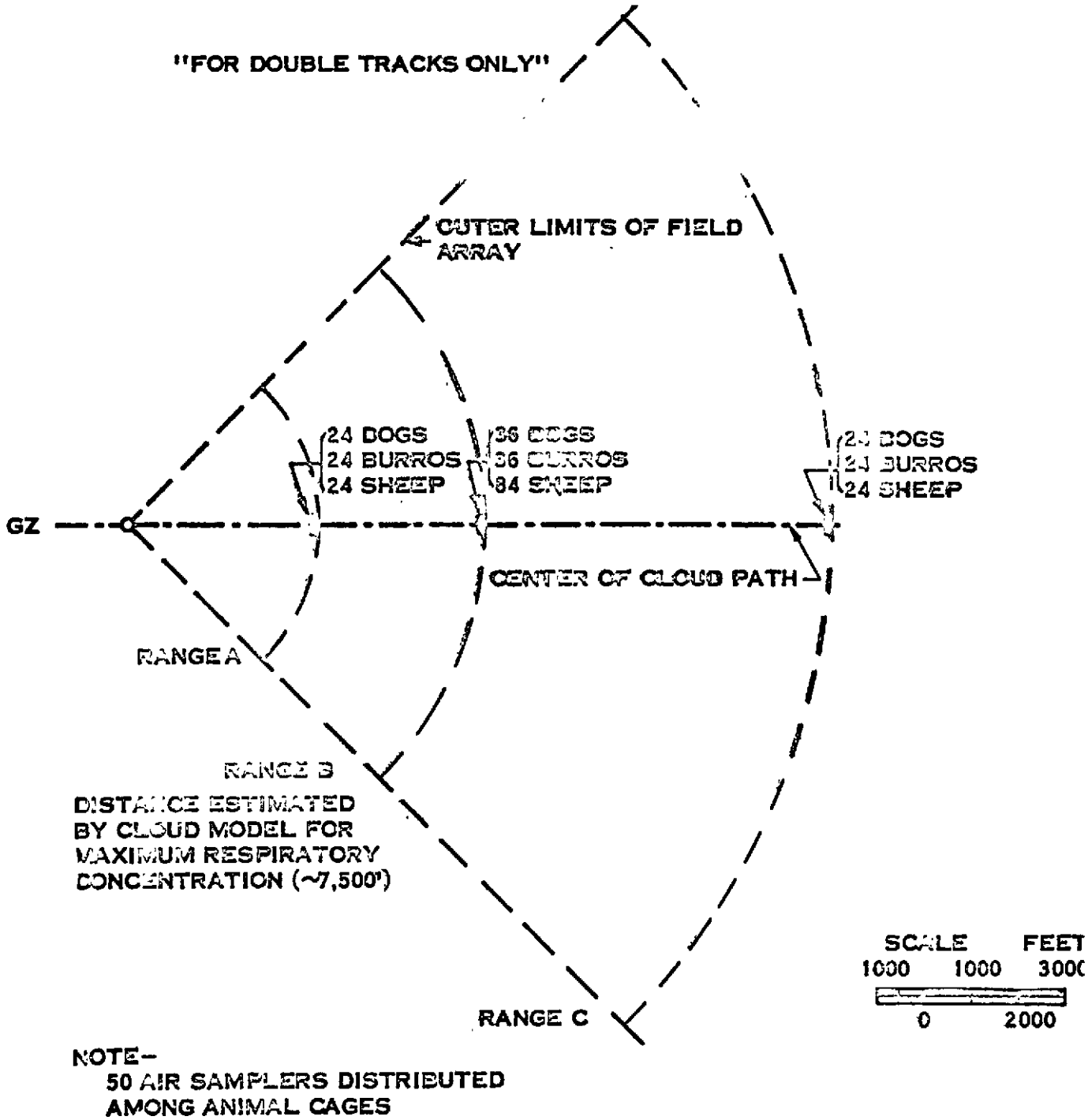

NOTE–
50 AIR SAMPLERS DISTRIBUTED AMONG ANIMAL CAGES

Figure 4. Mobile biological sampling array.

[redacted]

[redacted]

APPENDIX 8

ANNEX I

Device Array (Open)

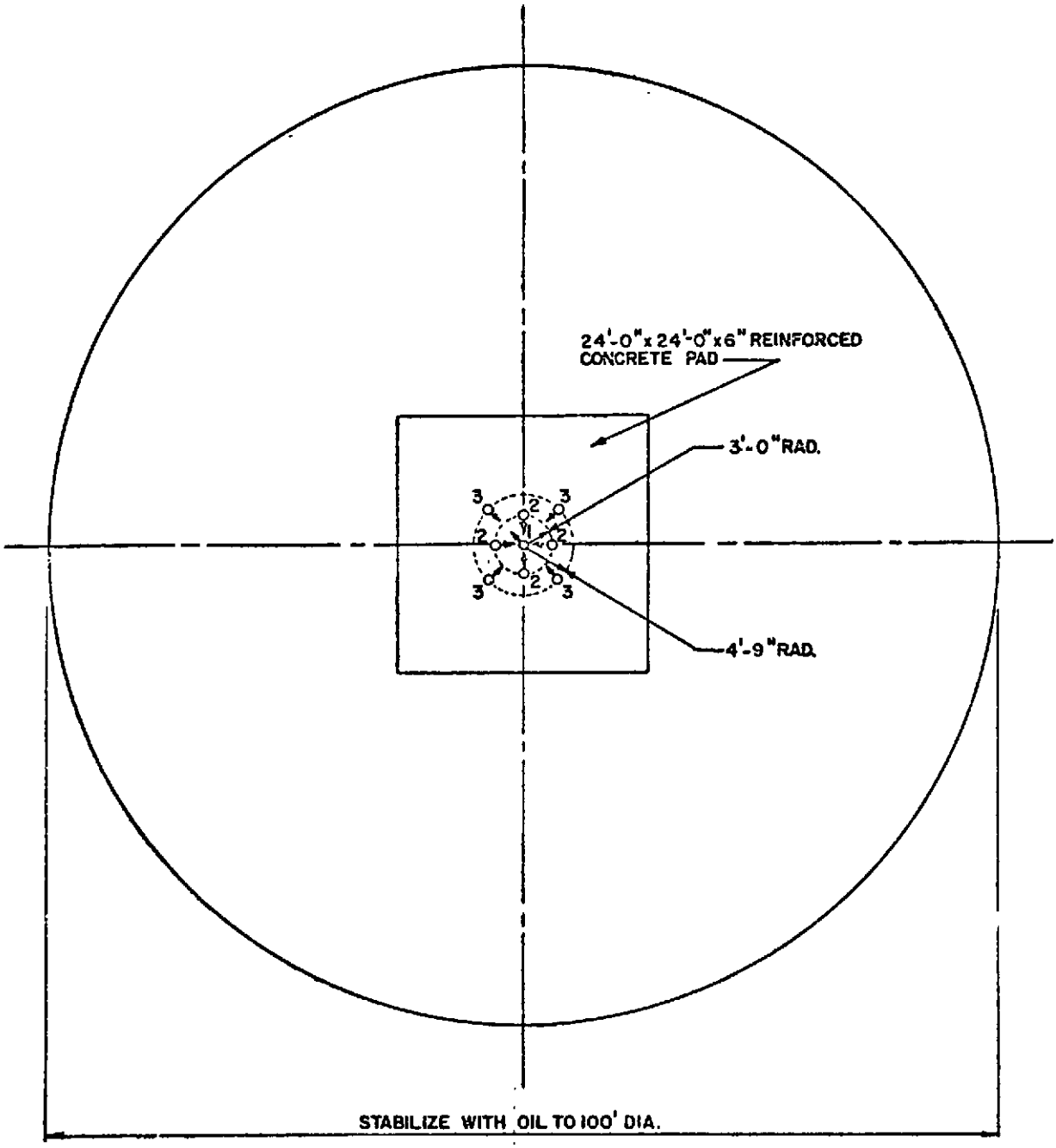

ROLLER COASTER - CLEAN SLATE - RESEARCH DEVICES ARRAY (OPEN)

[redacted]

4 0 4 8 12 16
SCALE: FEET

[redacted]

APPENDIX 8 ANNEX J

Device Array (Closed)

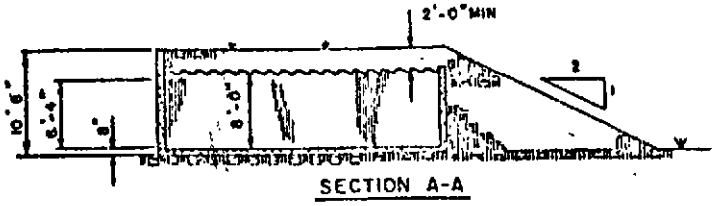

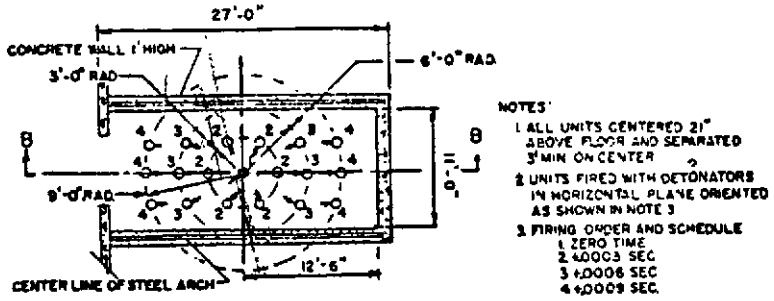

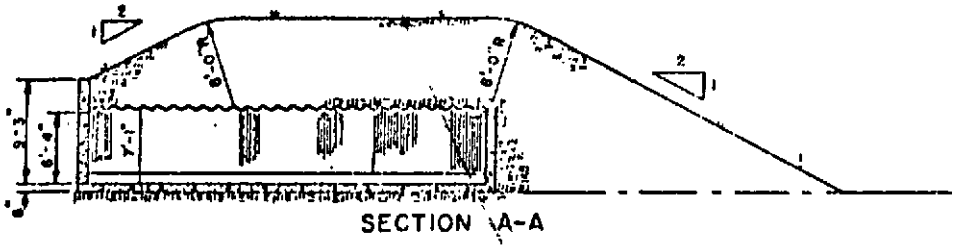

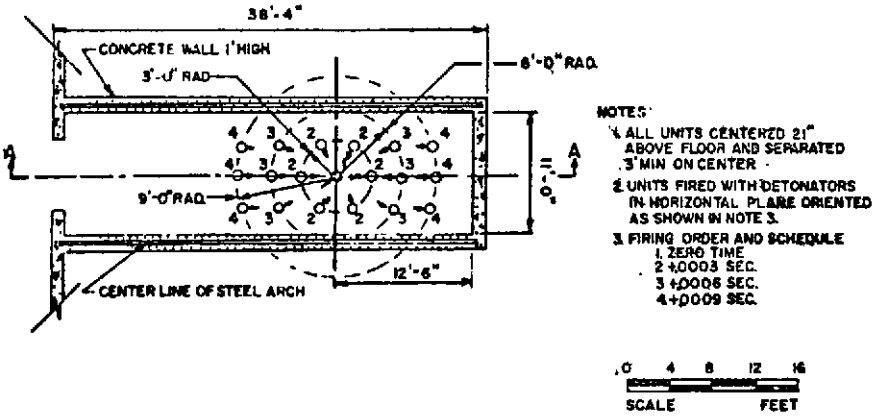

ROLLER COASTER – CLEAN SLATE – RESEARCH DEVICES ARRAY (CLOSED)

[redacted]