Vol 2

MATERIALS-12-Food Irradiation Program

MATERIALS-12-Food Irradiation Program

	Date	To	From	Class	Pgs.	No.	To	From	Class
1	7-6-60	AEC 719/33	skw	u					
2	3-22-61	AEC 719/34 Design of Facilities for Food Irradiation	vee						
3	3-28-61	AEC 719/35	skw	ouo					
4	7-14-61	AEC 719/36 Accelerator Radiation for Food Preservation	vee						
5	2-27-62	AEC 719/37	vee						
6	3-1-62	AEC 719/38	vee						

Material 12 Food Irrad

MAR 20 1962

Dear Senator Long:

This is in reply to your letter of February 27, 1962, requesting information on the proposed curtailment of the civilian food irradiation program.

It is true that funds for this work were not included in the federal budget for the coming fiscal year. It was determined that the program did not have sufficient priority in relation to other national requirements. The matter is expected to be reconsidered in the course of preparing the budget for the Fiscal Year 1964. In the meantime, in order not to lose the advantages of the going research program already staffed with existing personnel and with installed associated equipment, we will maintain a modest program in FY-63 utilizing existing budgetary resources. This program will be based on existing contracts. It is anticipated that such a modest program would entail expenditure of approximately $500,000. This program will include continuation of the work on radiation pasteurization of shrimp currently in progress at Louisiana State University.

The preceding information was provided to the Joint Committee on Atomic Energy, Subcommittee on Research and Development, which met March 6 and 7 to review both the U. S. Army program and that of the AEC.

The AEC program is directed to applications of particular interest to the civilian market, which entail only modest extension of shelf life with refrigeration and require lower or pasteurizing doses. The major difference relative to the U. S. Army program is that the latter is directed to the development of radiation sterilized meats for issuance to Army rations. I am enclosing for your information

Forwarded by memo: 9-26-62

two documents which will provide you with a general review of the Commission's program to date. The AEC objective is to bring selected radiation protection data showing the present practice for shelf life extension (Fish and Shrimp) to the point of technical and marketing feasibility. All results to date indicate the feasibility of successful completion of the program.

Sincerely yours,

(Signed) Glenn T. Seaborg

Glenn T. Seaborg

Honorable Russell B. Long
United States Senate

Enclosures:
1. Prog. AEC Rel. Prac. Pseudo Prog. dtd 1/62
2. South Pacific Sci. Comp. dtd 2/61

Receipt in Chairman's Office
CMKing/mm 3/19/62

Material - Food Irrad

EXECUTIVE OFFICE OF THE PRESIDENT
BUREAU OF THE BUDGET
WASHINGTON 25, D. C.

March 6, 1962

Honorable Melvin Price
Chairman, Subcommittee on Research,
Development, and Radiation
Joint Committee on Atomic Energy
Congress of the United States
Washington 25, D. C.

Dear Mr. Price:

I am pleased to respond to the subcommittee's request for information regarding the omission of funds from the 1963 budget of the Atomic Energy Commission for continuation of the low-dose food irradiation or pasteurization program.

The basis of the action on the 1963 budget process was, quite simply, one of considering the priority of this program relative to other urgent requirements for funds. The choice did not involve technical considerations, nor did it reflect any misunderstanding concerning the Army's quite different high-dose food irradiation or sterilization program, as erroneously reported in the technical press. The decision rested wholly on a judgment that, relative to pressing needs for basic research and such other critical programs as the application of atomic energy to the exploration of outer space (Projects Rover and SNAP), the food irradiation program had a marginal status and could be omitted on grounds of relatively low priority.

The decision did not reflect a belief that this program lacked merit, but rather that it did not have a high degree of urgency in the framework of the 1963 budget. I believe the committee is aware that arrangements have been made to reprogram 1963 funds in an amount sufficient to continue the program on a reduced scale. In addition, the matter is expected to be considered again during preparation of the 1964 budget.

I appreciate this opportunity to clarify the Administration's position.

Sincerely yours,

/s/ David E. Bell, Director
Bureau of the Budget

3-6-62

Copy filed in Budget-63

Materials - Food Irrad.

INTRODUCTORY REMARKS BY DR. GLENN T. SEABORG
CHAIRMAN, U.S. ATOMIC ENERGY COMMISSION

Prepared for Delivery Before
The JCAE Subcommittee on Research, Development and Radiation
March 6, 1962

This morning the Department of the Army outlined for you their program in the preservation of food. As has been noted the distinction between the Army sponsored program and the Commission sponsored program is that the Army is attempting preservation of food by sterilization using high doses of radiation while the Commission is examining pasteurization of food to extend their shelf life through moderate doses of radiation.

You will recall that in the hearings before the Committee on March 31, 1960 the Commission stated its intention to administer a program in low dose radiation pasteurization of perishable foods to extend their refrigerated shelf life as vigorously as deemed scientifically prudent. The Commission also stated that it would maintain full and active liaison with other interested Government agencies as well as keeping commercial food processing firms fully informed on progress in the program. Further, in view of the international interest in radiation pasteurization of foods, the Commission indicated it would establish procedures for positive exchange of information with other countries carrying out research in this field.

3-6-62

The Commission has now begun a varied program on ten foods to establish technical and marketing feasibility and safety clearances by the Food and Drug Administration. The ten are strawberries, peaches, tomatoes, grapes, citrus fruit, haddock fillets, clams, crabmeat, flounder and shrimp.

Results achieved to date indicate considerable progress has been made toward achieving the original objectives of the program. Dr. Spofford English, Assistant General Manager for Research and Development of the Commission staff will describe the present status of the program later today.

The Commission well appreciates the potential benefits foreseen from radiation pasteurization of foods and its implication in the Atoms-for Peace program. However, in evaluating over-all budgetary needs for Fiscal Year 1963 it was determined that the radiation pasteurization of foods program possessed a lower priority than some of the other national programs. Accordingly, funds for this activity were not specifically included in the President's FY 1963 budget. The matter is expected to be considered again in the course of preparing the budget for the Fiscal Year 1964. In the meantime, in order not to lose the advantages of the going research programs already staffed with scientific personnel and with installed associated equipment, we will maintain a modest program in

FY 1963 utilizing existing budgetary resources. It is anticipated such a modest program would entail expenditures of approximately $500,000.

This completes my formal statement. However, I will be happy to try to answer any questions which the Committee may wish to address to me prior to Dr. English's presentation.

Material 4-12-Food Irrad

OPTIONAL FORM NO. 10
5010-104
UNITED STATES GOVERNMENT ~~OFFICIAL USE ONLY~~

Reference Section

Memorandum

TO : Paul C. Aebersold, Director
Division of Isotopes Development

DATE: March 5, 1962

FROM : W. B. McCool, Secretary Original signed W. B. McCool

SUBJECT: AEC 719/37 - TESTIMONY FOR JCAE HEARINGS ON FOOD IRRADIATION PROGRAM

SYMBOL: SECY:MK

1. We informed your office on March 2, 1962, that at Meeting 1826 on February 28 the Commission:

a. Approved the draft testimony set forth in Appendix "A" to AEC 719/37;

b. Approved, subject to BOB review, a FY 1963 budgetary level for the AEC radiation pasteurized foods program of $500,000; and,

c. Noted that AEC 719/37 is unclassified.

2. The Chairman requested his testimony to be brief and similar in content to paragraphs 11 and 12 of Appendix "A" to AEC 719/37, and that it also include a brief background and history of the program, and a differentiation between pasteurization and sterilization processes.

3. The General Manager has directed you to take the action required by the above decision and request.

cc:
Chairman
General Manager
Deputy General Manager
Asst. General Manager
Asst. Gen. Mgr. for R&D
General Counsel
Congressional Liaison

~~OFFICIAL USE ONLY~~

3.5.62

Materials - 13 Jul Draft.

UNCLASSIFIED

March 1, 1962

AEC 719/38

COPY NO. 53

ATOMIC ENERGY COMMISSION

HEARINGS BEFORE THE JCAE ON THE FOOD IRRADIATION PROGRAM

Note by the Secretary

1. The attached correspondence, together with enclosure, from the Executive Director, Joint Committee on Atomic Energy, regarding the hearings scheduled for March 6 and 7, 1962, is circulated for the information of the Commission.

2. You will recall that the matter was noted at Information Meeting 120, Friday, February 23, 1962.

W. B. McCool

Secretary

DISTRIBUTION	COPY NO.
Secretary	1
Commissioners	2 - 6, 58
General Manager	7-8
Dir. of Regulation	9
Deputy Dir. of Regulation	10
Deputy Gen. Mgr.	11
Asst. Gen. Mgr.	12
Asst. Gen. Mgr. R&D	13
Asst. Gen. Mgr. Adm.	14
General Counsel	15-19
Biology & Medicine	20
Congr. Liaison	21
Controller	22-24
Isotope Development	25
Ind. Participation	26
Public Information	27-28
Inspection	29
Licensing & Regulation	30-31
Plans	32
Radiation Standards	33
Reactor Development	34-46
Manager, Naval Reactors	47
Research	48-49
D. C. Office	50-52
Secretariat	53-57

AEC 719/38

3/1/62

*Cm-7-JCAE

UNCLASSIFIED

CONGRESS OF THE UNITED STATES
JOINT COMMITTEE ON ATOMIC ENERGY

February 20, 1962

Honorable Glenn T. Seaborg
Chairman
U.S. Atomic Energy Commission
Washington 25, D. C.

Dear Dr. Seaborg:

This is in regard to the proposed hearings on the food irradiation program to be held on March 6 and 7, 1962 before the Subcommittee on Research, Development, and Radiation.

The Atomic Energy Commission and Army are being requested to present the status of their respective programs. We are now therefore requesting your presence for the introduction of the AEC program.

On January 14-15 and also on March 31, 1960 the AEC and Army had presented their particular programs outlining their objectives and accomplishments. It is now considered timely that we update these past hearings for the latest developments concerning food wholesomeness, safety and facilities involved in this program.

We await your decision as to who will present testimony in behalf of the AEC.

Attached you will find an outline showing the suggested areas of interest for both programs.

Sincerely yours,

/s/

James T. Ramey
Executive Director

Enclosure
Outline of Hearings

UNCLASSIFIED

TENTATIVE OUTLINE FOR FOOD IRRADIATION HEARINGS

I. ARMY PROGRAM

A. Status of High Dose Work (6 year program)

1. Food Wholesomeness

2. Irradiation Facilities

3. Previous Funding

B. Future Program

1. Funding

2. Logistic Military Applications

II. AEC PROGRAM

A. Status of Low Dose Work (5 year program)

1. Food Wholesomeness

Biology and Medicine Division

2. Irradiation Facilities

Isotopes Development Division

Mobile and Stationary Units

3. Previous Funding

B. Future Program

1. Funding

2. Commercial Applications

Meeting 12 - Food Irrad. program

OFFICIAL USE ONLY

OPTIONAL FORM NO. 10
5010-104
UNITED STATES GOVERNMENT

Memorandum

TO : File

DATE: February 27, 1962

FROM : W. B. McCool, Secretary

SUBJECT: TESTIMONY FOR JOINT COMMITTEE HEARINGS ON THE FOOD IRRADIATION PROGRAM

SYMBOL: SECY:JCH

1. At Information Meeting 120, held on February 23, 1962, the Commissioners requested circulation for consideration on Wednesday, February 28, of the proposed testimony for the Joint Committee Hearings on the Food Irradiation Program to be held on March 6.

2. The proposed testimony has been circulated as AEC 719/37 - Testimony for JCAE Hearings on Food Irradiation Program and is scheduled for Commission consideration at 2:00 p.m. on Wednesday, February 28.

cc:
Chairman
General Manager
Deputy General Manager
Asst. General Manager
Asst. to the General Manager
Congressional Liaison

2-27-62

OFFICIAL USE ONLY

~~OFFICIAL USE ONLY~~

February 27, 1962

AEC 719/37

COPY NO. 53

ATOMIC ENERGY COMMISSION

TESTIMONY FOR JCAE HEARINGS ON FOOD IRRADIATION PROGRAM

Note by the Secretary

The General Manager has requested that the attached report by the Director of Isotope Development, together with draft testimony, be circulated for consideration by the Commission at an early date.

W. B. McCool
Secretary

DISTRIBUTION	COPY NO.
Secretary	1
Commissioners	2 - 6,59-62
General Manager	7-8
Dir. of Regulation	9
Deputy Dir. of Regulation	10
Deputy Gen. Mgr.	11
Asst. Gen. Mgr.	12
Asst. Gen. Mgr. R&D	13
Asst. Gen. Mgr. Adm.	14
General Counsel	15-19
Biology & Medicine	20
Congr. Liaison	21
Controller	22-24
Isotope Development	25
Ind. Participation	26
Public Information	27-28
Inspection	29
Licensing & Regulation	30-31
Plans	32
Radiation Standards	33
Reactor Development	34-46
Manager, Naval Reactors	47
Research	48-49
D. C. Office	50-52
Secretariat	53-58

AEC 719/37

2-27-62

OFFICIAL USE ONLY

ATOMIC ENERGY COMMISSION

JCAE HEARING ON RADIATION PRESERVATION OF FOOD

Report to the General Manager by the Director of Isotopes Development

THE PROBLEM

1. To consider testimony to be presented by AEC at the JCAE Hearings on Radiation Preservation of Food on March 6 and 7, 1962, and to establish the AEC FY 1963 budgetary level for this program.

SUMMARY

2. Out of concern with the decision not to provide funds in the FY 1963 budget for the AEC radiation pasteurized foods program, the JCAE has scheduled a public hearing on this subject. The purpose of the Hearing is to have presented a progress report on both the AEC radiation pasteurization of foods program, the Department of the Army program on radiation sterilization of foods and to examine the budgetary situation of the AEC program.

3. Appendix "A" is a draft statement of proposed AEC testimony at this Hearing. In addition to progress, this statement also identifies that the AEC will maintain a modest program in FY 1963 of $500,000 and request full restoration in FY 1964.

4. Appendix "B", not to be sent included in the testimony, sets forth the disposition of the proposed FY 1963 expenditure of $500,000.

STAFF JUDGMENTS

5. The Division of Biology and Medicine and the Office of the Controller concur in the recommendations of this paper.

~~OFFICIAL USE ONLY~~

RECOMMENDATION

6. The General Manager recommends that the Atomic Energy Commission:

a. Approve the draft testimony set forth in Appendix "A";

b. Approve an FY 1963 budgetary level for the AEC radiation pasteurized foods program of $500,000; and,

c. Note that this paper is unclassified.

LIST OF ENCLOSURES

		Page No.
APPENDIX "A" -	Draft Testimony (JCAE Food Irradiation Hearing.....	3
APPENDIX "B" -	Anticipated Contracts and Approximate Costs to Maintain Modest Program in FY 1963.....	12

~~OFFICIAL USE ONLY~~

OFFICIAL USE ONLY

APPENDIX "A"

JCAE FOOD IRRADIATION HEARING

Draft Testimony

1. At the March 31, 1960, Hearings held by this Committee on the National Food Irradiation Research Program the Commission stated its intention to administer its functions in this area in an aggressive and productive manner and to proceed as vigorously and rapidly as scientific prudence indicates. The Commission also stated that it would maintain full and active liaison with other interested Government agencies as well as keeping commercial food processing firms fully informed on progress in the program. Further, in view of the international interest in radiation pasteurization of foods, the Commission indicated it would establish procedures for positive exchange of information with other countries carrying out research in this field.

2. Our initial efforts, begun in March 1960, were directed toward evaluation of previous work pertinent to radiation pasteurization of foods, detailing of a specific research and development program, and development of required irradiators. Accordingly, the following projects were implemented and completed:

Six contracts were implemented to evaluate existing information on the technical and practical feasibility of pasteurizing fish products and fruits and to determine which products offered the most promise for low dose experimentation.

Two further programs were initiated to survey and evaluate the existing knowledge on the effects of radiation on food wholesomeness, including food chemistry and microbiology.

OFFICIAL USE ONLY

Three additional programs were initiated to survey food packaging requirements, to make broad conceptual design studies of facilities for food irradiation, and to design and fabricate three research irradiators each using approximately 30,000 curies of Cobalt 60.

3. Based upon the foregoing studies and evaluations, the experimental program was initiated. In so doing, it was the Commission's objective to concentrate on a limited number of food products so as to achieve success sooner than would be possible if a multitude of foods were studied concurrently. It was felt these radiation pasteurized food products would serve as prototypes for stimulating other Government agencies and private industry to expand the technology to a wide spectrum of food items. It was also decided to concentrate the research effort in a relatively few key groups having special competence in this area. It was further determined that the source of radiation for carrying out the research should be readily available to the researchers and that shipment of food products for purposes of radiation processing was to be avoided. In line with this thinking, specially designed research irradiators were installed at the universities participating the program, other than Louisiana State University which already possessed an irradiator of its own. These irradiators also were available for use by the U.S. Department of the Interior Fisheries Laboratories located in the immediate vicinity of the universities and who were carrying out complementary programs.

4. The research program initiated in accordance with the above aims and currently in progress includes three laboratory research contracts on radiation pasteurization of clam and haddock fillets and on crab, flounder and shrimp. Two

complementary programs on radiation pasteurization of fruits have also been started. Three programs on the wholesomeness, including microbiology and food chemistry, of various sea foods, especially clams, haddock, crab and flounder, are now in effect. Two further programs in effect are a design study of transportable Cobalt 60 and electron machine irradiators, and a marketing feasibility study on radiation pasteurized fruits.

5. We have made important advances in design concepts for irradiators and irradiation facilities which I would like to discuss briefly. The research irradiators I mentioned previously combine great simplicity of operation with a high degree of built-in safety. Yet, they constitute a very versatile research tool wherein experimentation can be carried out under closely controlled conditions of temperature, radiation dose and atmospheric environment. They consist of 2 parallel plaques of Cobalt 60 located at the bottom of a 12 foot deep steel tank which is filled with water for shielding purposes. Products to be irradiated are placed in three canisters which are automatically lowered to the bottom of the tank by push button operation, coming to rest on either side and between the plaques. A more detailed description of these irradiators is contained in the report entitled, "Conceptual Design Studies of Facilities for Food Irradiation," furnished to the Committee in March 1961. This report also describes a central irradiation facility for the radiation pasteurization of fish. This facility would employ 300,000 curies of Cobalt 60 and would have a throughput of one ton per hour. The source to package configuration in this design is unique and permits unusually high efficiency. Rather than go into a technical description here, I would refer you to the report itself for this information. The function of this facility

OFFICIAL USE ONLY

would be to demonstrate the technical feasibility of the radiation pasteurization of fish on a semi-production scale and to gain estimates of the economics of the process.

6. We are currently in process of carrying out conceptual design studies of transportable food irradiators for radiation pasteurization of fruit. Fruit usually is brought from the field and taken directly to packing houses which are widely dispersed in the fruit producing areas. From the packing houses they are sent directly to the markets. It may not be economical for each packing house to have a radiation source since the various crops are highly seasonal at any one location and throughputs can vary considerably. Transportable irradiators on the other hand can be set up at various packing houses as needed. In our current study, we are examining both Cobalt 60 transportable irradiators and low energy electron machine transportable irradiators. From a technical viewpoint, both types of units appear to have advantages in the radiation pasteurization of fruit. It would be necessary, however, to actually construct and operate such devices to establish their practicality for the various processing conditions anticipated.

7. At the March 31, 1960, Hearing, the Commission stated "Our preliminary investigations already give us confidence in the ultimate success of low dose radiation processing to extend shelf life." Although considerably more research is required on this process, nevertheless all experimental evidence we have obtained to date supports and confirms this expression of confidence. Selected food items have responded very favorably to radiation pasteurization. Test samples of both fruit and fish products have been radiation pasteurized under varying conditions. Haddock fillets and clams, for example, responded very well and

retained high quality. In the case of clams, it has been possible to double refrigerated shelf life. Results obtained thus far with the radiation pasteurization of fruits, for example, stawberries, are equally good. In particular, the vitamin C retention of irradiated strawberries, important from a nutrition viewpoint, was found to be excellent. There are also promising results in the use of radiation to delay the ripening of fruits, such as pears thereby extending their marketable life. Of major interest is the finding that desirable extensions of shelf life of both fish and fruits can be obtained with radiation doses substantially lower than those originally believed necessary. This effect will enhance the economics of the process. It can be noted with satisfaction also that thus far in the national program on the wholesomeness and safety of radiation processed foods no toxic effects have been observed which are attributable to the radiation process alone.

8. The AEC program has benefited greatly from the assistance provided by several expert committees. Two meetings were held in 1961 of the American Institute of Biological Sciences Advisory Committee to the Commission on radiation pasteurization of food. This Committee, composed of experts in the various disciplines related to radiation processing of food, provides advice with regard to program orientation and essential areas of research. Meetings also were held in January 1961 and February 1962 of the Interdepartmental Committee on Radiation Preservation of Food. The objective of the Interdepartmental Committee is to facilitate the transition of this technology into the civilian economy and to keep other government departments fully abreast of developments in this field. A National Fisheries Institute Committee

on Seafood Radiation Preservation was also established during the year. This Committee is composed of top executives selected from the fishery processing,distribution and selling industries. Its purpose was to correlate industry interest and requirements with this developing technology and most specifically to participate in the planning for radiation facilities.

9. The Commission has maintained close liaison with other countries conducting research on radiation pasteurization of foods. At the last General Conference of the International Atomic Energy Agency the U.S. urged the initiation by IAEA of a research program on radiation pasteurization of foods and offered this Government's support in this endeavor. The U.S. has also cooperated closely with the Organization for Economic Cooperation and Development, and other international organizations, in providing advice and assistance on radiation pasteurization of foods. Our observation of international programs in this area indicates a high level of activity and interest. Canada has, for example, already cleared radiation processed potatoes for public consumption. The Russians are reported to have done likewise.

10. Through FY 1962 the Commission will have spent approximately 1,200,000 dollars in its radiation pasteurization of foods program. About a third of this is invested in equipment. I would like at this point to direct the Committee's attention to Chart No. 1 which shows expenditure of funds expected through June 30, 1962 according to specific program elements. We feel that progress achieved with these resources has been substantial and there is every reason to have confidence in the success of this technology. While we have made a good start, considerably more work is required to demonstrate technical feasibility

and to establish conclusively the wholesomeness and safety of radiation pasteurized foods. Chart No. 2 identifies over-all program elements, progress to date, as well as remaining work to be done for successful demonstration of this new technology.

11. In evaluating over-all budgetary needs, for the fiscal year 1963, it was determined that with relationship to other national programs, the program for radiation pasteurization of foods possessed a relatively low priority. Accordingly, funds for this activity were not included in the budget.

12. The Commission well appreciates the potential benefits foreseen from radiation pasteurization of foods, the promising experimental results obtained to date and the Atoms-for-Peace implications. The Commission expects therefore to request full restoration of the program in the FY 1964 budget and if budgetary support is provided we intend to continue the program in subsequent years as necessary to bring it to a successful conclusion. In order not to lose the advantages of the going research programs already staffed with scientific personnel and with installed associated equipment, we will maintain a modest program in FY 1963 utilizing existing budgetary resources. It is anticipated such a modest program would entail expenditures of approximately $500,000. These funds will be utilized to maintain in force current research programs of a continuing nature on wholesomeness, including food chemistry and microbiology, establishment of processing conditions, irradiator design, and to initiate animal feeding studies.

CHART NO. 1

FOOD PROGRAM TARGETS

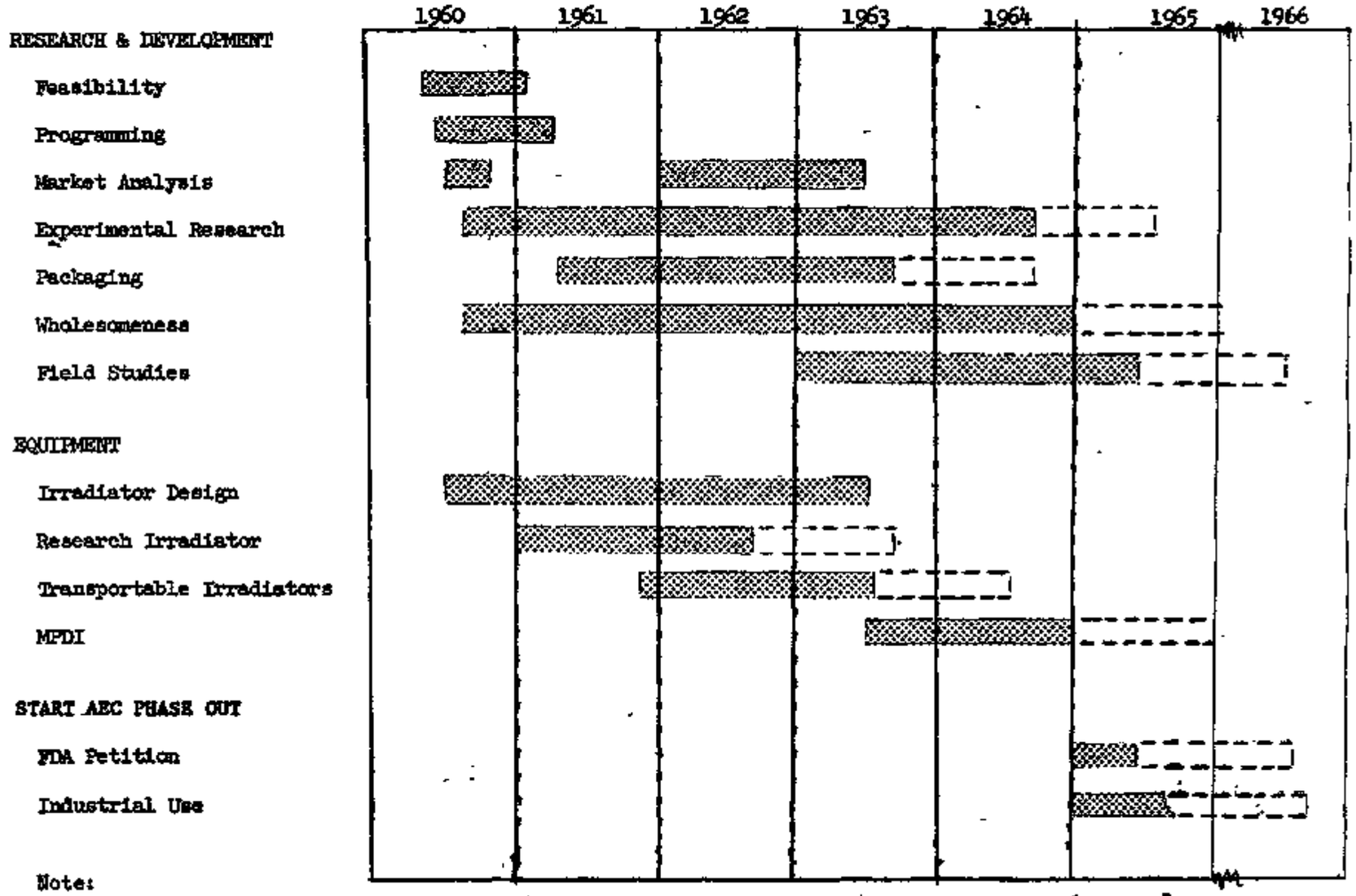

Note:
Dotted line indicates delay resulting from reduced budget level in Fiscal Year 1962.

OFFICIAL USE ONLY

OFFICIAL USE ONLY

CHART NO: 2

Fiscal Year

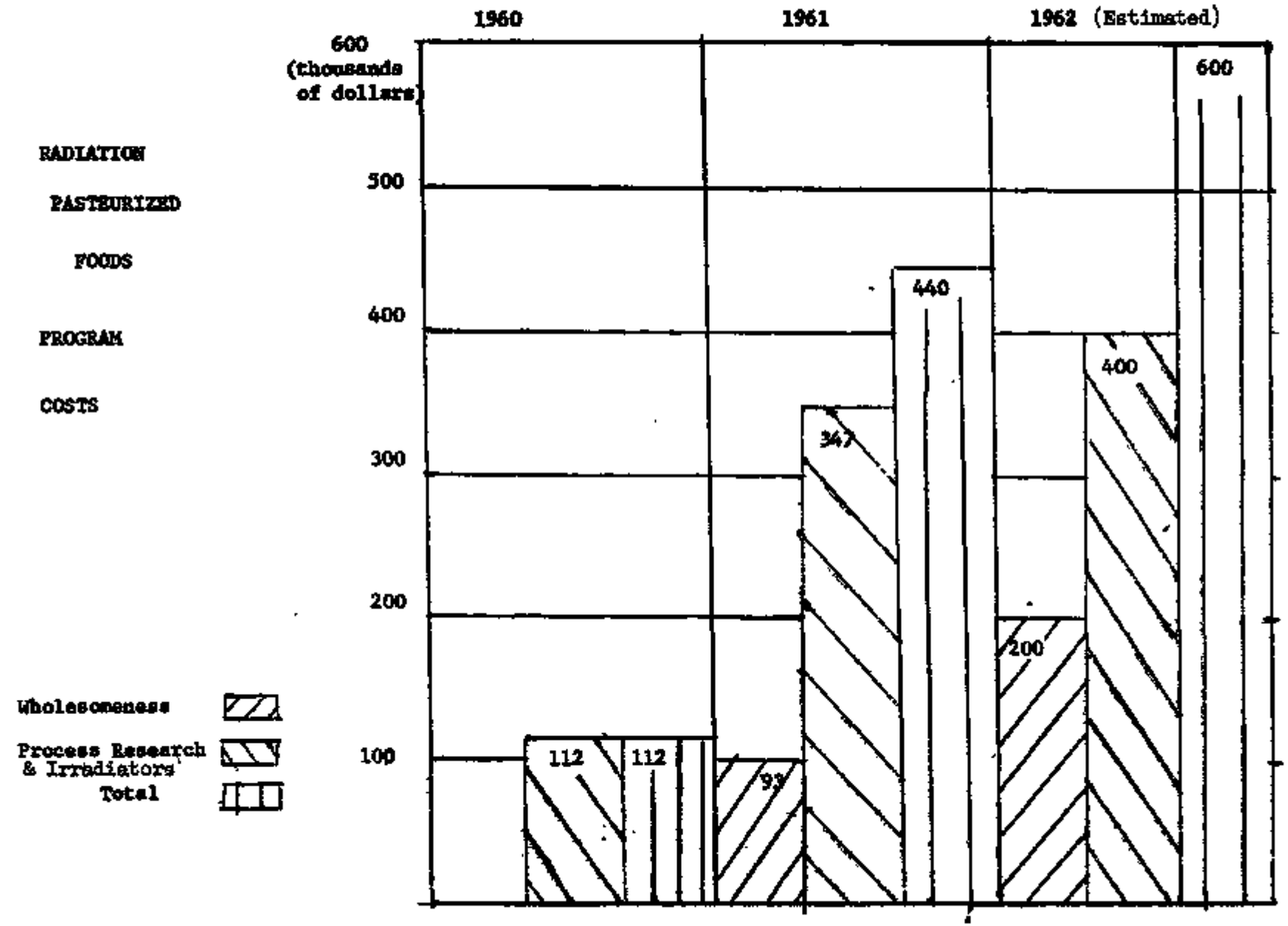

OFFICIAL USE ONLY

OFFICIAL USE ONLY

OFFICIAL USE ONLY

APPENDIX "B"

Anticipated Contracts and Approximate Costs to Maintain Modest Program In FY 1963

Wholesomeness

U. of California (fruits)	$40,000	
U. of Michigan (botulinum)	30,000	
U. of Washington (crab and flounder)	60,000	
Continental Can Company (botulinum)	30,000	
USDI-Gloucester (clams and haddock)	40,000	
Subtotal		$200,000

Process Research

U. of California (fruit)	$50,000	
Mass. Inst. of Technology (clams & haddock)	50,000	
USDI-Seattle (crab and flounder)	85,000	
USDA-Washington, D.C. (Fruit Economics Study)	20,000	
Louisiana State University (Shrimp)	45,000	
BNL (Irradiator design, equipment)	50,000	
Subtotal		$300,000
Total		$500,000

-Meeting on Food Irrad

OFFICIAL FORM NO. 10
5010-104

UNITED STATES GOVERNMENT ~~OFFICIAL USE ONLY~~

Memorandum

TO : File

DATE: January 12, 1962

FROM : Harold D. Anamosa, Acting Secretary

Harold D. Anamosa

SUBJECT: BUDGET REDUCTION FOR FOOD IRRADIATION PROGRAM

SYMBOL: SECY:AHE

At Information Meeting 104 on January 12, 1962 the Chairman reported that during his meeting with Congressman Holifield and Mr. Ramey of the Joint Committee staff on January 10, Congressman Holifield had expressed disappointment in the reduction in the food irradiation program and requested information on the FY 1963 Isotopes budget.

cc:
Chairman
General Manager
Deputy General Manager
Asst. General Manager
Controller
Asst. to the Gen Mgr.
Director, Isotopes Development

1-12-62

~~OFFICIAL USE ONLY~~

Copy filed: Budget-63

MEMORANDUM FOR GENERAL MANAGER
[redacted]

SUBJECT: BROOKHAVEN NATIONAL LABORATORY REPORT

Attached for your information is a public announcement of a report submitted recently to the Joint Committee on Atomic Energy on "Conceptual Design Studies on Facilities For Radioactive Decontamination of Fuel". The report was prepared by the Brookhaven National Laboratory.

We plan to call this announcement and report Friday, October 27, 1961, to a limited number of qualified business and industrial news media. Enough copies will be kept on hand to fulfill requests from industry.

Signed Duncan Clark

Duncan Clark, Director
Division of Public Information

Attachment: [illegible]

cc: A. E. Ludlum, General Manager
W. McCool, Secretary
D. Clark, DPI

DPI DPI DPI

J.Townsend/lh

10-25-61

Mat. 12 - Food Irradiation

UNCLASSIFIED

July 14, 1961

AEC 719/36

COPY NO. 32

ATOMIC ENERGY COMMISSION

FOOD PRESERVATION BY MEANS OF ACCELERATOR RADIATION

Note by the Secretary

The attached memorandum and enclosure from the Special Assistant to the President-Director, Food for Peace, is circulated for the information of the Commission. The matter has been referred to the General Manager for appropriate handling.

W. B. McCool

Secretary

DISTRIBUTION	COPY NO.
Secretary	1
Commissioners	2 - 6,37,38
General Manager	7
Dir., of Regulation	8
Deputy Gen. Mgr.	9
Asst. Gen. Mgr.	10 - 11
Asst. Gen. Mgr. R&ID	12
Asst. Gen. Mgr. Adm.	13
Asst. to the GM	14
General Counsel	15 - 18
Congr. Relations	19
Isotope Development	20
Ind. Participation	21
Public Information	22 - 23
Licensing & Regulation	24 - 25
Operations Analysis	26
Research	27 - 28
D. C. Office	29 - 31
Secretariat	32 - 36

7-17-61

UNCLASSIFIED

THE WHITE HOUSE
WASHINGTON

June 27, 1961

MEMORANDUM FOR

Glenn T. Seaborg
Chairman, Atomic Energy Commission

Enclosed is a proposal from Dr. Kennard H. Morganstern, President, Radiation Dynamics, Inc., for food preservation by means of accelerator radiation.

I would appreciate it if you would evaluate this proposal and communicate your findings directly to Dr. Morganstern.

/s/ George McGovern

George McGovern
Special Assistant to the
President Director, Food
for Peace

Enclosure

UNCLASSIFIED

June 27, 1961

Dear Dr. Morganstern:

The Department of Agriculture has informed this office that its research in accelerator irradiation has been limited to one or two small projects, conducted under support from the Department of Defense and the Atomic Energy Commission.

I am also advised that the major Federal program on both radiation source development and food preservation is being conducted by the Atomic Energy Commission.

I have, therefore, requested the Atomic Energy Commission to evaluate your proposal and to communicate its findings directly to you.

Thank you again for your interest.

Sincerely yours,

/s/ George McGovern

George McGovern
Special Assistant to the President
Director, Food For Peace

Dr. Kennard H. Morganstern
President, Radiation Dynamics, Inc.
Westbury Industrial Park
Westbury, Long Island
New York

Michael A. Fox Draft

March 31, 1961

Honorable Chet Holifield
Chairman, Joint Committee on Atomic Energy
~~House of Representatives~~ Congress of the United States

Dear Mr. Holifield.

The FY-1961 Authorization Bill included a provision regarding design studies on facilities for food irradiation. Attached for the Committee's information is a report prepared in accordance with this provision.

We should like to emphasize that the conclusions of this report and the design concepts discussed are very preliminary. The report is largely based on reports by the Massachusetts Institute of Technology, United States Department of Interior and Stanford Research Institute on radiation pasteurization of fish and fruits, copies of which have been provided the Committee. These reports outline very broad areas of research which must still be conducted before the parameters for radiation processing of these products can be established. Of necessity, therefore, the present report on design concepts of facilities for food irradiation is based upon very sketchy technical data and assumptions that are yet to be proved. The report should be viewed as a first step leading to future design concepts upon which greater reliance can be placed. It follows that the cost estimates presented in the report also are very preliminary. Except for the research irradiator, facilities comparable to those described have not heretofore been built. Thus there is no firm foundation for considering the elements of cost.

As the Commission indicated at the hearings on food irradiation in March of last year, we are proceeding on a sound scientific basis to develop the essential requirements for radiation pasteurization of fish and fruits. To foster this purpose one research irradiator of the type described in the report has already been built and two more are on order. These will be employed in research programs which will develop the data upon which more precise and detailed concepts of facilities for food irradiation can be based.

See Appendix "B" of AEC 719/35 for Enclosure

OFFICE ▶
SURNAME ▶
DATE ▶

AEC 719/35

5-3-61

To prepare the attached report Brookhaven National Laboratory was asked to consider design concepts of irradiators applicable to the radiation pasteurization of foods based upon the aforementioned studies by the Massachusetts Institute of Technology, the United States Department of the Interior and Stanford Research Institute. Accordingly, the report considers conceptual designs of a research irradiator, a central radiation facility which would be used by several food processors and an in-plant irradiator to be located in individual food processing plants.

Preliminary consideration also is given to transportable irradiators to be moved to different areas for processing food at various production or harvesting sites. The need for developing specific information on performance (dosage, package size, residence time, etc.) precluded more detailed consideration of conceptual designs of transportable irradiators at this time. However, as our research program delineates more precisely these various factors, the Commission plans continuing design studies to optimize facilities for radiation pasteurization of food. Such studies will include transportable irradiators.

Because of lack of reasonably firm facility cost estimates as well as the fact that the processing requirements entailed in radiation pasteurization of specific products are yet to be defined, it was concluded that conducting an economic analysis of the process at this time would be premature. With present limited knowledge, it was felt that such an analysis would be highly speculative and not very meaningful. As our body of technical information builds up, however, appropriate economic evaluations will be made.

The Commission is prepared to discuss the results of these studies at your convenience.

Sincerely yours,

/s/ R. E. Hollingsworth

Acting
General Manager

Enclosure:
Rpt. on Conceptual Design Studies

R&PB:OID	DD:OID	D:OID	DGM		
[illegible]	[illegible]	[illegible]	[illegible]		
3/30/61	3/30/61	3/30/61	3/30/61	3/30/61	3/30/61

			AGM:ID	AGM	DGM	
		3/ /61	3/ /61	3/ /61	3/ /61	3/ /61

Meeting G. 12 - Food Irrad

OPTIONAL FORM NO. 10

UNITED STATES GOVERNMENT

Memorandum

~~OFFICIAL USE ONLY~~

Reference Section

TO Paul C. Aebersold, Director
Office of Isotopes Development

DATE: March 30, 1961

FROM Harold Anamosa, Acting Secretary

SUBJECT AEC 719/35 - DESIGN OF FACILITIES FOR FOOD IRRADIAITON

SYMBOL: SECY:JGH

1. We informed your office on March 30, 1961, that at Meeting 1718 on March 29 the Commission:

a. Approved transmittal to the Joint Committee on Atomic Energy of the report on design of facilities for food irradiation, (Appendix "B" to AEC 719/35);

b. Noted that the report will be transmitted by letter such as Appendix "A" to AEC 719/35; and

c. Noted that AEC 719/35 is unclassified.

2. The General Manager has directed you to take the action required by the above decision. It is our understanding that your office will prepare the correspondence to the JCAE. A copy of this letter together with other pertinent correspondence should be provided the Office of the Secretary.

cc: General Manager
Deputy General Manager
Asst. General Manager
Asst. General Manager for R&ID
General Counsel
Congressional Relations

~~DOCUMENT COPY~~

3-30-61

Mtg.1718
3-29-61
DMO

4. AEC 719/35 - Design of Facilities for Food Irradiation

Under consideration was AEC 719/35 requesting transmittal to the JCAE of the Brookhaven National Laboratory report on the design of facilities for food irradiation. In answer to a question from Mr. Graham, Mr. Aebersold noted that the letter and the report had been re-written to contain a caveat to the effect the cost estimates presented in the report were not guaranteed by the AEC.

Mr. Aebersold said he thought the AEC should include an evaluation of the highly versatile, safe, easily operated food research irradiator described in the Brookhaven report before it is transmitted to the JCAE. Mr. Hollingsworth said it was of prime importance to meet the April 1 deadline, and at a later date, an evaluation of the report could be prepared. Mr. Graham suggested preparation of the evaluation of the Brookhaven report be discussed informally with the Joint Committee staff after the report is transmitted.

After further discussion, the Commission:

a. Approved transmittal to the Joint Committee on Atomic Energy of the report on design of facilities for food irradition, (Appendix "B" to AEC 719/35);

b. Noted that the report will be transmitted by letter such as Appendix "A" to AEC 719/35); and

c. Noted that AEC 719/35 is unclassified.

3-29-61

CONFIRMED TO BE UNCLASSIFIED
DOE NSI DECLASSIFICATION REVIEW E.O. 12958
BY: E.A. Pohl 6-30-98 DOE/NN-523
THIS PAGE ONLY

Material - 12 - Sec

~~OFFICIAL USE ONLY~~

~~OFFICIAL USE ONLY~~

March 28, 1961

AEC 719/35

COPY NO. 56

AEC 719/35

ATOMIC ENERGY COMMISSION

DESIGN OF FACILITIES FOR FOOD IRRADIATION

Note by the Secretary

1. The Acting General Manager has requested that the attached report by the Director of Isotopes Development be circulated for consideration by the Commission at the meeting scheduled for 2:00 p.m., Wednesday, March 29, 1961.

2. This paper supersedes AEC 719/34 circulated on March 22, 1961.

W. B. McCool
Secretary

DISTRIBUTION	COPY NO.
Secretary	1
Commissioners	2 - 6,61-62
General Manager	7
Dir., Regulation	8
Deputy Gen. Mgr.	9
Asst. Gen. Mgr.	10 - 11
Asst. Gen. Mgr. R&ID	12
General Counsel	13 - 16
Biology & Medicine	17
Congr. Relations	18
Construction & Supply	19 - 20
Finance	21 - 22
Isotope Development	23 - 47
Public Information	48
Licensing & Regulation	49 - 50
Operations Analysis	51
New York Oprns.	52
D. C. Office	53 - 55
Secretariat	56 - 60

~~OFFICIAL USE ONLY~~

3-28-61

OFFICIAL USE ONLY

ATOMIC ENERGY COMMISSION

DESIGN OF FACILITIES FOR FOOD IRRADIATION

Report to the General Manager by the
Director of Isotopes Development

THE PROBLEM

1. To consider a report on the design of facilities for food irradiation.

DISCUSSION

2. The FY 1961 Authorization Bill included a provision that the AEC conduct design studies on facilities for food irradiation and report on these by April 1, 1961.

3. In part to provide necessary background information for these studies, evaluations were made of the technical and marketing characteristics of the fish and fruit industries relative to possible radiation pasteurization of these products. Fish and fruit are the products currently included in the AEC radiation pasteurized foods program (see AEC 719/31). The reports of these studies, (Radiation Preservation of Selected Fruits and Vegetables, Stanford Research Institute; Evaluation of the Technical, Economic and Practical Feasibility of Radiation Preservation of Fish, Massachusetts Institute of Technology; Marketing Feasibility Study of Radiation Processed Fishery Products, U.S. Department of the Interior) were provided Brookhaven National Laboratory which was requested to make the necessary design studies.

4. The Brookhaven National Laboratory report is attached as *Appendix "B". It is proposed that this report be transmitted to the Joint Committee on Atomic Energy in response to the aforementioned provision of the FY 1961 Authorization Bill.

* Appendix to JCAE

OFFICIAL USE ONLY

STAFF JUDGMENTS

5. The Divisions of Construction and Supply, Biology and Medicine, and Finance concur in the recommendation of this paper.

RECOMMENDATION

6. The General Manager recommends that the Atomic Energy Commission:

a. Approve transmittal to the Joint Committee on Atomic Energy of the report on design of facilities for food irradiation, (Appendix "B");

b. Note that the report will be transmitted by letter such as Appendix "A".

c. Note that this paper is unclassified.

OFFICIAL USE ONLY

OFFICIAL USE ONLY

APPENDIX "A"

PROPOSED LETTER TO JCAE

1. The FY-1961 Authorization Bill included a provision regarding design studies on facilities for food irradiation. Attached for the Committee's information is a report prepared in accordance with this provision.

2. We should like to emphasize that the conclusions of this report and the design concepts discussed are very preliminary. The report is largely based on reports by the Massachusetts Institute of Technology, United States Department of Interior and Stanford Research Institute on radiation pasteurization of fish and fruits, copies of which have been provided the Committee. These reports outline very broad areas of research which must still be conducted before the parameters for radiation processing of these products can be established. Of necessity, therefore, the present report on design concepts of facilities for food irradiation is based upon very sketchy technical data and assumptions that are yet to be proved. The report should be viewed as a first step leading to future design concepts upon which greater reliance can be placed. It follows that the cost estimates presented in the report also are very preliminary. Except for the research irradiator, facilities comparable to those described have not heretofore been built. Thus there is no firm foundation for considering the elements of cost.

3. As the Commission indicated at the hearings on food irradiation in March of last year, we are proceeding on a sound scientific basis to develop the essential requirements for radiation pasteurization of fish and fruits. To foster this purpose one research irradiator of the type described in the report has already been built and 2 more are on order. These will be employed in research programs which will develop the data upon which more

~~OFFICIAL USE ONLY~~

precise and detailed concepts of facilities for food irradiation can be based.

4. To prepare the attached report Brookhaven National Laboratory was asked to consider design concepts of irradiators applicable to the radiation pasteurization of foods based upon the aforementioned studies by the Massachusetts Institute of Technology, the United States Department of the Interior and Stanford Research Institute. Accordingly, the report considers conceptual designs of a research irradiator, a central radiation facility which would be used by several food processors and an in-plant irradiator to be located in individual food processing plants.

5. Preliminary consideration also is given to transportable irradiators to be moved to different areas for processing food at various production or harvesting sites. The need for developing specific information on performance (dosage, package size, residence time, etc.) precluded more detailed consideration of conceptual designs of transportable irradiators at this time. However, as our research program delineates more precisely these various factors, the Commission plans continuing design studies to optimize facilities for radiation pasteurization of food. Such studies will include transportable irradiators.

6. Because of lack of reasonably firm facility cost estimates as well as the fact that the processing requirements entailed in radiation pasteurization of specific products are yet to be defined, it was concluded that conducting an economic analysis of the process at this time would be premature. With present limited knowledge, it was felt that such an analysis would be highly speculative and not very meaningful. As our body of technical information builds up, however, appropriate economic evaluations will be made.

7. The Commission is prepared to discuss the results of these studies at your convenience.

~~OFFICIAL USE ONLY~~

APPENDIX "B"

CONCEPTUAL DESIGN STUDIES ON FACILITIES FOR RADIATION PASTEURIZATION OF FOOD

O. A. Kuhl
L. Galanter
V. O'Leary
B. Manowitz

Brookhaven National Laboratory
Upton, New York

March, 1961

~~OFFICIAL USE ONLY~~

INDEX

Page

ABSTRACT. . . . . .

INTRODUCTION. . . . . .

PART I - RESEARCH IRRADIATOR. . . . . .

PART II - CENTRAL OR IN-PLANT FACILITY. . . . . .

PART III - TRANSPORTABLE IRRADIATOR. . . . . .

PART IV - SAFETY CONSIDERATIONS. . . . . .

ABSTRACT

1. This report considers design concepts of radiation facilities for radiation pasteurization of foods. Irradiator types discussed include research, central or in-plant and transportable units.

2. Experimental design work on a highly versatile, safe, easily operated food research irradiator has been completed and the first unit fabricated. The research irradiator is essentially a pool type gamma source of approximately 25,000 curies of cobalt 60 and has a capacity of 37 megarad pounds per hour. The irradiation chambers are provided with both temperature and atmosphere control to facilitate experimental work. A distinct advantage of the irradiator is simplicity of operation. A central control panel is so constructed that a moderately trained individual can operate the facility without possibility of endangering himself or others from radiation. The irradiator is of moderate cost and is readily installed at a particular research site.

3. A design concept of a central or in-plant food irradiator flexible enough to be modified into transportable units is considered in detail. Utilizing this design concept a commercial production capacity of approximately 1,000 megarad pounds of product can be processed per hour. In this case

the facility contains a 300,000 curie source mounted on a single plaque. To obtain maximum source efficiency, food packages are moved frontally toward the source. As the package nears the source plaque the source rack drops into a recess permitting the package to pass over its top and be positioned on the other side. The source and irradiation chamber size with its consequent requirement for a large amount of biological shielding necessarily limits this facility to either the central or in-plant type, or certainly to a fixed installation.

4. A design concept is developed for a transportable irradiator. A smaller source strength and irradiation chamber are necessary in order to reduce shielding requirements. A production rate of 25 megarad pounds is forseeable. Counter-balancing this lower production rate, however, are the advantages of ready mobility, the ability to handle small load premium products and the potential of demonstrating the feasibility of radiation pasteurization on a wide variety of seasonal crops at the harvest or production sites.

5. Safety considerations are of prime concern throughout this study. The report is concluded with a hazards evaluation outlining various procedures and safety devices applicable to any of the irradiator types.

INTRODUCTION

1. Previous work on radiation pasteurization of food has indicated the need for development of concepts of pre-commercial and commercial irradiation facilities including research, transportable, central and in-plant units. The purpose of this study is to formulate more accurately design concepts which could be made applicable to these requirements. Food products of particular reference include fish and fruit, since extension of shelf-life of these products with radiation appears to offer quality and marketing advantages.

2. The different types of irradiation facilities are described as follows:

a. Research Irradiator: A highly flexible low capacity irradiator specifically designed to support a wide range of research requirements.

b. Central Facility: A separate plant comparable to a refrigeration plant which would be accessible to and used by several food processors for multiple product handling.

c. In-Plant Facility: A smaller specialized modification of the central facility which would be installed in individual food processing plants and be used for limited product processing.

d. Transportable Irradiators: These include both truck and rail-mounted irradiators as well as units which could be disassembled and transported into food producing areas during harvesting seasons.

3. Part I of this study is a discussion of the design of a research irradiator. Part II contains a conceptual design of a central or in-plant facility based upon a current method of fish processing.[1/] For purposes of simplicity, a particular method for processing fillets was chosen for discussion realizing that this process could readily be made applicable to the processing of either whole fish or other marine products. Furthermore the process described is adaptable to radiation pasteurization of fruits.[2/] Part III of this report discusses transportable irradiators. Part IV sets forth safety considerations in irradiator design and operation.

1/ Evaluation of the Technical, Economical and Practical Feasibility of Radiation Preservation of Fish - NYO-9182 Available - Office of Technical Services, Department of Commerce, Washington 25, D. C. - $1.75

2/ Radiation Preservation of Selected Fruits and Vegetables - SRIA-30 Available - Office of Technical Services, Department of Commerce, Washington 25, D. C. - $3.00

PART I

RESEARCH IRRADIATORS

1. This part of the report considers a food research irradiator which has been designed for use in the Atomic Energy Commission radiation pasteurization of foods program. One of these units has already been constructed and is currently being installed at the Massachusetts Institute of Technology.

2. The entire system is designed with simplicity and safety in mind. It is capable of being operated by an individual not highly trained in various nuclear aspects. For these reasons, it appears to be an ideal irradiator for the purpose of supporting research work on irradiation pasteurization of food.

3. The research irradiator is essentially a pool-type gamma radiation facility. A two plaque source configuration containing approximately 25,000 curies of cobalt 60 is positioned at the bottom of a water-filled stainless steel tank, 6 feet in diameter and 12 feet deep (Fig. 1).

4. The cobalt 60 source is in the form of strips assembled into two plaques approximately 19" x 23 1/2 x 1/8". The plaques are in parallel vertical planes, and are mounted in racks on the floor of the irradiator. Food samples to be irradiated are placed

in water-tight canisters and are lowered into the radiation field by means of an electrically driven screw rod mechanism. Three canisters are provided, one of which is positioned between the plaques and the others outside of the plaques. Although designed primarily for research, the irradiator is capable of handling food packages of various sizes in commercial use. The maximum size sample which can be accommodated is 14" x 18" x 6".

5. The design is intended to provide a radiation dose rate of 370,000 rad/hr at the center of a package of unit density. For a package 18" x 14" x 6" the production capacity is 37 megarad pounds per hour, and the maximum to minimum dose variation is approximately 1.5. If greater uniformity is desired it may be achieved at the expense of a smaller production capacity. For instance, for a package 12" x 12" x 5" the production capacity would be about 19 megarad pounds per hour and the maximum to minimum dose variation in the package approximately 1.25.

6. During irradiation both temperature and atmospheric control can be maintained in the canisters. The temperature is variable from 10°F to 150°F. Various gases may be introduced into the canister during the irradiation to alter atmospheric conditions.

7. The exposure time, and consequently the radiation dose, can be pre-set on the control panel which is positioned above the tank. The electrical system automatically removes each canister from the radiation field when the appropriate dose has been received.

8. A package water purification system is provided as part of the unit. Its purpose is to keep the water clean and to decontaminate it in the event of a source encapsulation failure. Underwater lights are also provided. The safety system consists of a water level control which activates an alarm and a solenoid valve to a water inlet when the water height decreases by 6". Included also is a remote area radiation monitor capable of activating alarms and other safety devices when the radiation level exceeds a predetermined limit. The radiation level at the pool surface is less than 1 millirad per hour.

9. Cost of this irradiator, including the cobalt-60 source, is approximately $75,000.

PART II

CENTRAL AND IN-PLANT IRRADIATOR

General Considerations

1. The following background information on fish processing technology was used in a conceptual design study of central or in-plant irradiators. The entire production of sea food in the United States is about 2.4 billion pounds of which approximately 431 million pounds are fillets. The fish are caught, and are generally eviscerated and stored at temperatures ranging from 32° to 40°F. on board the fishing boat, until they are delivered to the processing plants. In the plant a conveyor system takes the chilled eviscerated fish product through a series of steps such as the following (Fig. 2):

a. Rinse to remove ice and slime.

b. Scaling.

c. Rinse.

d. Filleting - principally by automatic machine.

e. Trimming - a manual operation.

f. Rinse.

g. Chilling.

h. Packaging - both automatic and manual.

i. Freezing.

j. Storage or distribution.

2. Radiation pasteurization treatment could be introduced at Step 1, in lieu of the freezing step. In many processing plants the packaged product is sent to a central freezing plant. Similarly, a product to be irradiated could be sent to a central irradiation facility.

3. Such a plant would require large walk-in refrigerators for pre-irradiation and post-irradiation storage, adequate loading and unloading areas, the irradiation facility, and auxiliary service areas (Fig. 3). The radiation process would normally proceed in three steps: (1) temporary refrigerated storage, (2) irradiation treatment, and (3) refrigerated storage or distribution (Fig. 4).

Process Description

4. The packages will move from the packaging position to the irradiation facility input area (Figs. 5, 6, 7). They are chilled to 35°F or lower prior to being loaded on the irradiator conveyor. The conveyor will hold four packages vertically so that the largest surface area will be presented to the surface of the source plaque. At the present time a variety of commercial shipping packages are employed. The size of the package used in this report is 18" x 14" x 5", which can be made up of a single block of sealed wrapped product or of a number of smaller packages. It is assumed that the sealed bulk package has sufficient insulation value that no refrigeration is required for the 90 minutes or so the fish is in the irradiator. The

conveyor racks are then loaded and will move edgewise into a labyrinth entrance and proceed to the irradiation chamber where they will move sidewise with the largest surface parallel to the source.

5. In the irradiation chamber approximately 18 racks containing 72 of the previously described packages will move uniformly toward the source in increments of 5.5" every 5.5 minutes. The source plaque at appropriate intervals is lowered so that its top is level with the irradiation chamber floor. The rack nearest the source on the input side then moves to the other side of the source irradiation position while all other racks move one increment. The source then returns to the irradiation position. The length of time for the operation of this sequence is controlled by a timer at the control panel.

6. Once the chamber is loaded, one rack load, or approximately 200 pounds of product will be discharged every 5.5 minutes, and will have received a radiation dose of 5×10^5 rads. The radiation processed product will be discharged from the output side of the facility and either stored at a temperature of 35°F to await shipment, or loaded directly in refrigerated conveyances for distribution.

Irradiator Design Concept

7. The essential components of an irradiator of this type include a water tank for source storage, source lifting and synchronization mechanism, irradiation chamber, irradiation chamber cover, labyrinth conveyor ducts, conveyor, shielding, and safety devices. The irradiator is designed to be assembled on a concrete slab and can be test operated before the required shielding is put into place.

8. The irradiator specifications are listed in Table I.

Table I

Irradiator Specifications

Production Rate	1000 megarad pounds per hour
Total Dose	5×10^5 rad max.
Uniformity within Package	$\pm$ 20%
Package Dimensions	14" x 18" x 5"
Voids in Package	7%

The irradiator is estimated to have an annual production capacity of 2,000 tons based upon a throughput of 1 ton per hour and a 40 hour/wk operation.

9. Labor involved for the operation of this facility consists of two men per shift for the loading and unloading of the conveyor belt. A third man would handle the source, the operation of the plant, and would be technically competent to handle minor breakdowns and maintenance of the equipment.

10. The over-all dimensions of the irradiator are approximately 27' x 28', which could be easily accommodated in a building 40' x 62'. The building would also include space for walk-in refrigerators with a storage capacity of approximately 10 tons of fish. A ton of fish packed in 50-pound boxes would occupy a space 2'4" x 3' x 4'2" high or approximately 29 cubic ft. The building would be a one floor facility with limited office space.

11. The source storage tank, 5 ft. square and 12 ft. deep, will provide shielding for the assembly and storage of the source plaque when not in use (Fig. 5). It will contain a source rack and guides along which the rack can be moved up and down from the irradiation to the storage position. A motor located outside the irradiation chamber, with gear and chain mechanisms, will provide a positive drive for source rack movements. A water conditioning unit will provide water of high purity and low corrosion potential for the source storage tank. This unit will also serve to detect and collect any potential radioactive contaminants in the water. A skimmer will be used to keep the surface of the water free of dust.

12. When the radiation source is assembled and ready for use, a removable grating will cover the water tank opening. The source is raised or lowered into the irradiation and non-irradiation positions through an opening in the grating cover.

13. The inside dimensions of the irradiation chamber are 4' x 4' x 11'. This is sufficient to contain the source plaque (46" wide and 38" high), together with packages to a depth of 50" at the front of and in back of the source. The width of the chamber is just large enough to accommodate the width of the source rack and the guide channels. A movable hatch at the top of the irradiation chamber provides access for maintenance and introduction of source shipping casks. Labyrinth entrances are designed to attenuate exterior radiation to a safe level.

14. The conveyor system of the overhead power and free trolley type carries the material to be irradiated in and out of the irradiation chamber. The drive system moves the racks containing the packages from the loading area into the input labyrinth entrance and to the irradiation chamber. Another mechanism actuates the system which moves the packages sidewise at regular increments of time and distance toward the source plaque. A timer regulates these increments which are controlled by the total radiation dose received. The packages on each side of the source plaque are butted and moved toward the plaque at increments of 5.5", with the exception of the rack on the input side nearest the source. When the source moves down into the tank this rack moves approximately 11" into a position adjacent to the source on the output side. Mechanical stops control the movement of all packages. These are synchronized with the movement of the source from the

operating to the down position. After the racks have moved through 18 irradiating positions, they are picked up by the discharge conveyor system and carried out through the output labyrinth to the unloading area.

Radiation Source Design

15. The principal factors considered in the cobalt 60 source design studies were source efficiency, specific activity, source element dimensions, dimensional stability, safety of source encapsulation and economics. For the purpose of this study it was assumed that sources would be available in the required shape and at the desired activity level.

16. Examination of source efficiency may be divided into two parts: (1) the inherent efficiency due to the shape of the source elements, and (2) the effect of source geometry and source-to-target geometry on the absorption of photon energy. For a fixed target size, the target density and composition will have a pronounced effect on the efficiency of utilization of gamma energy. For the purpose of this study, however, the target will be assumed to be of unit density and water equivalent.

17. The following source element shapes were considered:

a. Thin rectangular strips

b. Solid rods

c. Hollow tubes

Source Element Efficiency

18. The design of these source elements is illustrated by Figs. 8, 9 and 10. The efficiencies of the three elements, both clad and unclad, were compared by calculating the gamma self-absorption. For purposes of comparison, element widths or diameters were made the same. The results are listed in Table 2.

Table 2

	Rectangular Strips	Hollow Rods	Solid Rods
Source Element Dimensions	10" x 0.75" x .034"	0.750" O.D. .682" I.D.	0.75" D x 10" long
% Self-Absorption (unclad)	3.90	6.0	17.9
% Self-Absorption, .130" Stainless Steel Cladding	5.9	14.0	18.7

19. Examination of these results indicates the inadvisability of using solid rod sources because of the attendant greater self-absorption. For example, if 300,000 curies are required for rectangular strips, then

$$\frac{(1-.125)}{(1-.397)} \times (3 \times 10^5) \text{ or}$$

4.37×10^5 curies would be needed for solid rod sources. At $1.00 per curie, the initial cost of the source would be $137,000 higher to do the same work. In the case of hollow rod sources, the difference is not so great. However, heat transfer problems may prove to be the limiting factor in the activation of hollow tubes. The calculated values for tubes are only approximations.

Effect of Source Geometry and Source-to-Target Geometry on Over-all Efficiency

20. In the design of the irradiator, the objective is to make the source as transparent to its own radiation as possible, and to do the opposite with regard to the target. To achieve the former result one should use a radiation source which is thin so that large values of surface-to-volume are obtained, thus decreasing self-absorption. A practical limit is approached, however, in the extension of this principle, since structural stability decreases and the required specific activity per unit mass increases with decreasing source thickness. The required specific activity may approach values theoretically unattainable.

21. Another way in which source transparency may be increased is to dilute material of high specific activity and high density with inert material of low density. A uniform dispersion of activity is probably optimum to achieve uniform dose distribution across the front section of any target facing the source. One can also resort to the technique of spacing individual source elements, leaving air gaps between them. However, this technique is limited by the maximum tolerable dose variation in a target because of the "ripple" effect on the frontal face of the source. Calculations have shown that the maximum spacing between source elements should be approximately equal to the distance between the target face and the radiation source.

22. In the case of solid targets, the only way in which the fraction of absorbed energy may be increased for a fixed source size and shape would be to surround the source with as large a volume of target as possible. The limitations here are the over-all size of the irradiator, the amount of biological shielding, and the required material flow pattern with its inherent mechanical problems.

Source Design Concept

23. Taking into account the aforementioned factors the following parameters were used to achieve reasonable source efficiency and practical irradiator size.

a. The source would be composed of a series of thin rectangular elements arranged in the shape of a single thin plaque.

b. The size of the facility would permit the simultaneous irradiation of 18 rows of packages equally distributed on both sides of a single plaque.

Source elements measuring 6.25" x 0.85" x 0.034" were selected for two reasons. First, they can easily be shipped in containers of reasonable size and weight, and second, it is possible to produce them in existing reactors.

Table III

Summary of Source Requirements and Performance

Total Activity Required	3.09×10^5 curies
Source Piece Dimensions	5" x 0.75" x .030"
Specific Activity Average	38.0 curie/gram
Total Number of Pieces	288
Area of Plaque	38" x 46"
Average Production Rate	1000 megarad #/hr
Throughput Rate	2000 #/hr
Residence Time	1.53 hours
Total Replacement Required After 5 yrs.	$.97\ (3.09 \times 10^5) = 2.96 \times 10^5$
Over-all Efficiency	29.2%

Source Replacement

24. The source replacement calculations were based on an annual fixed percentage sufficient to establish the original total curie level. The curie requirement based on 10% replacement per year for 5 years is summarized in Table 3. Over this period the total curie replacement would be 0.957 times the original amount at an average specific activity of 1.91 times the original value. In comparison, for a 20% replacement per year, the total amount to be added would be 1.30 times the original amount at an average specific activity of 1.30 times the original value. This means that the total replacement of cobalt 60 may be reduced by lowering

the fraction of the source replaced per year. To accomplish this, however, the specific activity of the replacement cobalt 60 must be higher than that of the cobalt 60 being replaced.

Rack and Source Plaque

25. The source plaque will be comprised of a number of individual elements approximately 0.85" wide and 6.25" long (Fig. 11). The cobalt metal irradiated in the reactor may be nickle-plated, and encapsulated in aluminum for activation. The individual cobalt 60 source elements de-jacketed from the aluminum irradiation containers will be inserted into stainless steel envelopes, three to an envelope. The open end of the envelope will be remotely welded and the assembly tested for leaks. Four of these subassemblies, 0.85" wide and 19" long, will in turn be inserted into a larger stainless steel envelope, the open end of which will be crimped, welded, and tested. 24 of these assemblies, each 1.90" wide and 38" long (exclusive of 1" extensions at each end which are used to mount the assembly in the rack), will make up the required source plaque, 46" x 38".

26. The rack will be designed to hold the 24 source units in a vertical position with a slotted section at each end to accommodate the one-inch extension. The rack frame will be of extra heavy construction. The vertical edges will ride in stainless steel guide channels. Chains mounted to the rack assembly and driven by a motor are used to raise and lower the source. Assembling and dismantling of the source plaque is easily

accomplished. The upper horizontal member of the rack is detachable. This holds the sources in the rack, and its wedge-like design enables the entire rack to reposition any improperly positioned package. When this bar has been removed the sub-assemblies can be easily removed for rearrangement or replacement, by means of underwater tools.

Cost Estimate

27. The estimated costs of the irradiator excluding the cobalt 60 source and building in which to house it is $60,000. A 40 ft. by 62 ft. building which would serve merely to provide shelter to the irradiator, but including the 2 refrigerators, is estimated to cost $231,000. At current AEC prices the cobalt 60 source would cost $309,000 plus an additional $10,000 for encapsulation and transportation. Accordingly, total cost for the facility is $610,000.

PART III

TRANSPORTABLE IRRADIATORS

1. Transportable irradiators, capable of ready movement from site to site, are desirable for selected food processing requirements. The primary advantage of such irradiators would be their ready mobility and therefore their ability to handle small load premium products and their ability to demonstrate the feasibility of radiation processing of a wide variety of seasonal crops and products at the site of production or harvest.

2. In this study only preliminary consideration has been given to the design of transportable irradiators. The need for developing specific information on performance requirements (dosage, package size residence time, etc.) precluded more detailed evaluation of conceptual design at this time. However, such detailed analyses are planned. Nevertheless for the purpose of this report three variations of such units can generally be identified:

a. A demountable unit in which the components are separately transported by truck and reassembled at the site.

b. Truck mounted

c. Railroad car mounted

3. A preliminary engineering design concept of a demountable unit is described in Figure 12.* This is a readily and fully transportable demonstration facility. It is designed for batch

*Secretariat Note - Not attached; copies will be available at Commission meeting during discussion of this paper.

operations and has over-all dimensions of 5' x 9 1/2' and a total weight, exclusive of water shielding, of about 10 tons.

4. The unit is dissembled prior to transportation which can be on an ordinary trailer truck. The main components consist of the source container, removable shielding sleeve, tank shell and tank base plate. Auxiliary equipment includes safety devices such as a water level controller, radiation monitors and alarms and a water conditioner unit.

5. The set-up of this unit can be accomplished in less than 48 hours by two men and a crane. As the unit is unloaded from the trailer, the flange and mounting plate is placed in the desired position, the source container is placed at the center of this plate, the bolts holding down the container cover are removed and the sling attached to the cover. Then the tank shell is placed on the base plate and bolted down. The water conditioning and other safety equipment are installed and the tank is filled with water. The container cover is removed and the shielding sleeve is put into place. The guide tubes and work table are installed. With the installation of an operator's platform, the unit is ready for service.

6. The unit pictured was designed to irradiate material in canisters. A variation of this design would permit the irradiation of packages 14' x 18" x 6" in size for example. Using 30,000 curies of Co 60 in the form of two opposing plaques an output of 25 megarad #S/hr could be achieved.

7. All the safety instrumentation and equipment mentioned as part of the Research Irradiator would also be used with this facility. Similarly, the irradiation container can be temperature controlled, off-gases collected and different atmospheres introduced.

Truck Mounted Unit

8. For truck mounted irradiators state regulations imposed a weight limit of approximately 10 tons per axle. This restricts the size of the irradiator including source dimensions and curie content, radiation chamber volume and size and number of packages. The production capacity of such an irradiator could approach 100 megarad pounds per hour. Primarily because of the reduced size of the irradiation chamber the efficiency of the system would be lower than that of the central facility discussed in Part II.

Railroad Car Mounted

9. In the case of the railroad car mounted irradiator, the load limit is approximately 125 tons. The efficiency of source utilization would be about twice that of the truck unit. Similarly the production capacity would be doubled but still well below that of a permanent type facility.

10. An alternate concept with somewhat less mobility would be a water tank facility similar to the research irradiator described in Part I. Its capacity would be about the same as the railroad facility and costs should be considerably lower. The

entire unit including the cobalt in its lead container could be transported in an ordinary trailer truck.

11. Site preparation prior to erection would be required. This consists primarily of excavating a hole in the ground about five feet square and twelve feet deep with a concrete pad at the base of the hole. Shed type weather protection would also be transportable. Such units can be erected and dismantled in several days.

12. Another approach would be a facility very similar to the central plant design described in this report but with transportable shielding - such as ferroshosphorus or concrete block. This unit would be less flexible and would require a longer period to erect but might serve more as a regional facility.

13. Installation normally will require little or no site preparation. The unit can be operated and installed by people with a minimum of training. It can be dismantled and reloaded onto the trailer in one or two days and since it can be transported on a regular over-the-roads trailer, may be moved to practically any part of the U.S.

PART IV

SAFETY CONSIDERATIONS

Installation and operation of facilities employing large radioisotope sources must take into account certain safety requirements. The following are possible problems and safety measures incorporated into the design of the research irradiator described in Part I and the concept of the central facility discussed in Part II.

1. Contamination of Area or Product

The cobalt-60 source elements will be doubly encapsulated. Each encapsulation will be individually tested. Samples of storage tank water will be tested weekly or bi-weekly for radioactive contamination. A water conditioning unit for filtering and demineralizing the tank water will contain a sensitive detector adjacent to the ion exchange column for detecting any activity picked up from the water. Since the package does not come in direct contact with the source, airborn activity can be the only means of contamination. An air monitor would serve to detect a minute amount of air contamination and activate a mechanism for submerging the source.

2. Accidental Exposure of Personnel

Safety devices - mechanical and electrical - will be used to forestall this possibility. The shielding cover over the

irradiation chamber opening will be locked in the closed position. When the source is in the up or irradiating position, interlocks will prevent the cover from opening. Should the source cover be opened by any other means, the source drive mechanism will automatically return the source to its storage position on the tank floor, at which point the mechanism becomes inactive. Automatically controlled gates will cover the input and output duct entrances. Opening and closing will be activated by the conveyor racks. Any other attempt to open these doors will shut down the conveyor and cause the source moving mechanism to return the source to its storage position.

Flashing lights and an illuminated sign will indicate that the facility is in operation.

3. Malfunctioning of Mechanical or Electrical Equipment

A power failure or electrical circuit failure with the source in an operating position is always a possibility. Remote operating devices will insure the return of the source to the storage position until power is restored or the electrical circuit is repaired. Monitoring equipment will be of the fail-safe type, indicating malfunctioning of the operating devices by audible and visual signals. The source rack consists of a heavy rigid frame designed to safely contain the source elements in a plaque. In case of jamming, it can be forced down into the tank without damage to the rack or the sources, by means of the emergency drive

mechanism. Should this fail, a special plug in the irradiation chamber cover can be removed and a tool used to actually push the rack back into the tank.

4. Unsafe Operating Procedures

In any mechanical or electrical operation, there is no substitute for competent operators. Operators must be aware of all hazards involved, and be able to react promptly to emergencies. They must know in detail how the facility functions. There must be a definite plan of operation, and no deviations permitted without carefully considered approval by those in charge. Only authorized personnel should be permitted to operate the unit.

The safety rules outlined in this part of the report should preclude any attempt at operating in an unsafe manner.

The qualifications required for the supervisor of this facility should include

(a) Reliability and practical common sense

(b) Mechanical and electrical aptitude

(c) Basic knowledge of radiation hazards

(d) Ability to intelligently use basic radiation instruments.

5. Unsafe Methods of Loading Source Material Into or Out of the Facility

All loadings, unloadings, or rearrangement of sources should be performed by trained personnel from an outside service organization.

The sources are always shipped in casks which have been carefully checked for safe shielding and against any possible hazards. These are securely bolted and sealed, and should be kept this way until they are about to enter the tank, at which time all fastenings holding the access cap should be removed. Instruments for removing the cap should be fastened to it at this time, following which it can be lowered to the tank bottom. The cap can then be removed, the sources removed from the cask and placed on the tank floor. The cask can then be removed from the tank and the sources assembled in the rack. Survey meters should be used throughout all these operations. A reversal of this procedure would be necessary for removal of the source, and a combination of these procedures would be used for source replacement.

6. Leakage in Storage Tank

Instead of initially installing the tank in an unprotected hole in the ground, it may be advisable to provide double containment by placing it inside a concrete tank.

A water level probe will give early warning should the water level fall by as much as six inches. It will also activate a solenoid valve which will open and allow water to flow into the tank. A radiation monitor will be positioned above the water surface. Should the water level fall when the source is in storage position, the radiation detector will note the increase in radiation and give warning by means of an audible and visual alarm.

Additional provisions and procedures are under consideration to meet the possible emergency of a complete loss of water.

7. Radiation Damage to Vital Control Instrumentation, Electrical Wiring, etc.

All drive motors and wiring will be located outside the radiation area. Any wiring which must of necessity be exposed to radiation will be carefully selected for radiation resistance, shielded, and periodically checked and replaced.

The in-cell radiation monitor must be calibrated at regular intervals. The only other equipment likely to be affected by radiation would be the wiring for the underwater lights. This is not part of the safety system, and will require only periodic inspection and possible replacement of exposed cable.

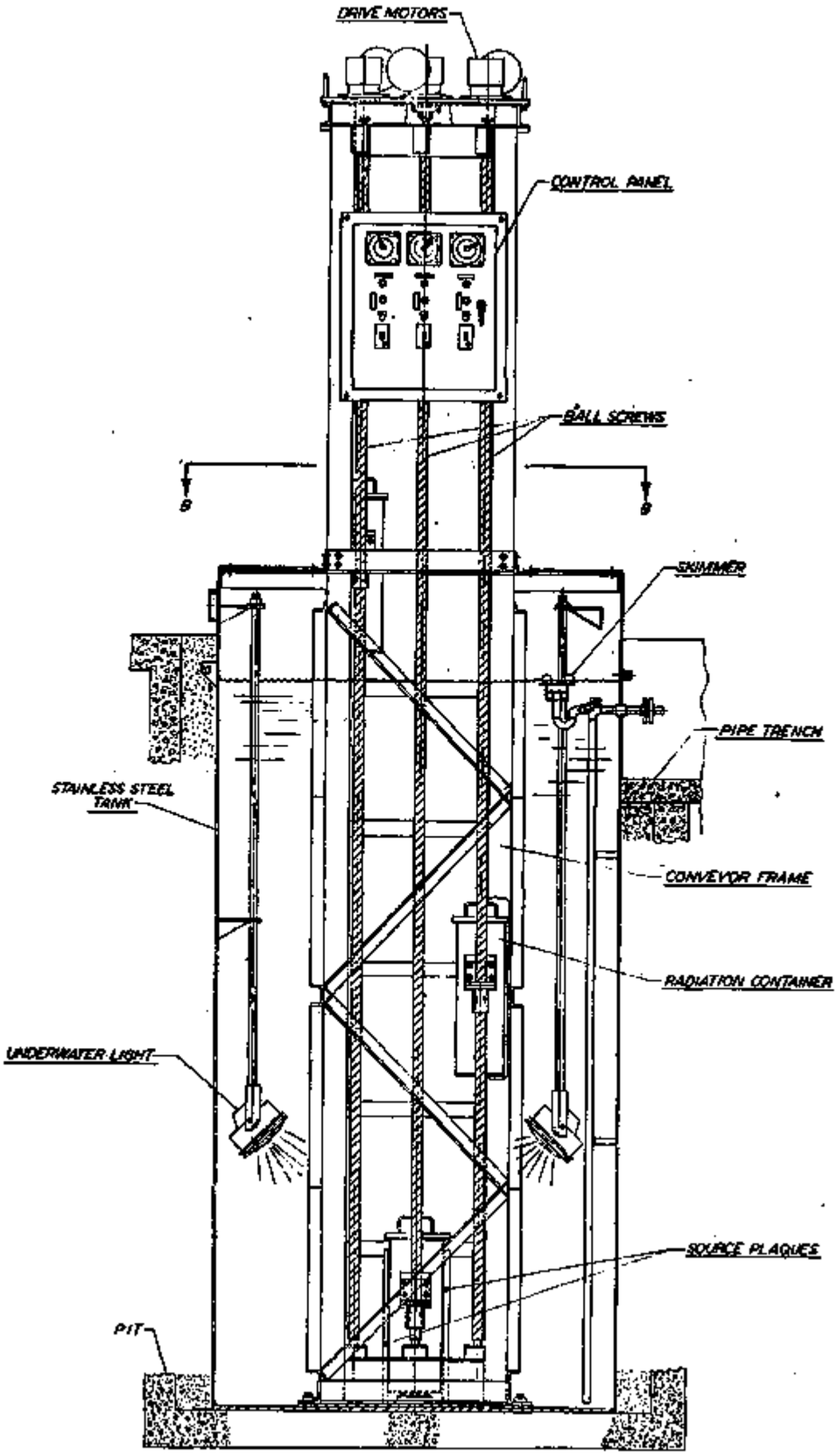
DRIVE MOTORS
CONTROL PANEL
BALL SCREWS
B
B
SKIMMER
PIPE TRENCH
STAINLESS STEEL TANK
CONVEYOR FRAME
RADIATION CONTAINER
UNDERWATER LIGHT
SOURCE PLAQUES
PIT

SECTION A-A

OFFICIAL USE ONLY

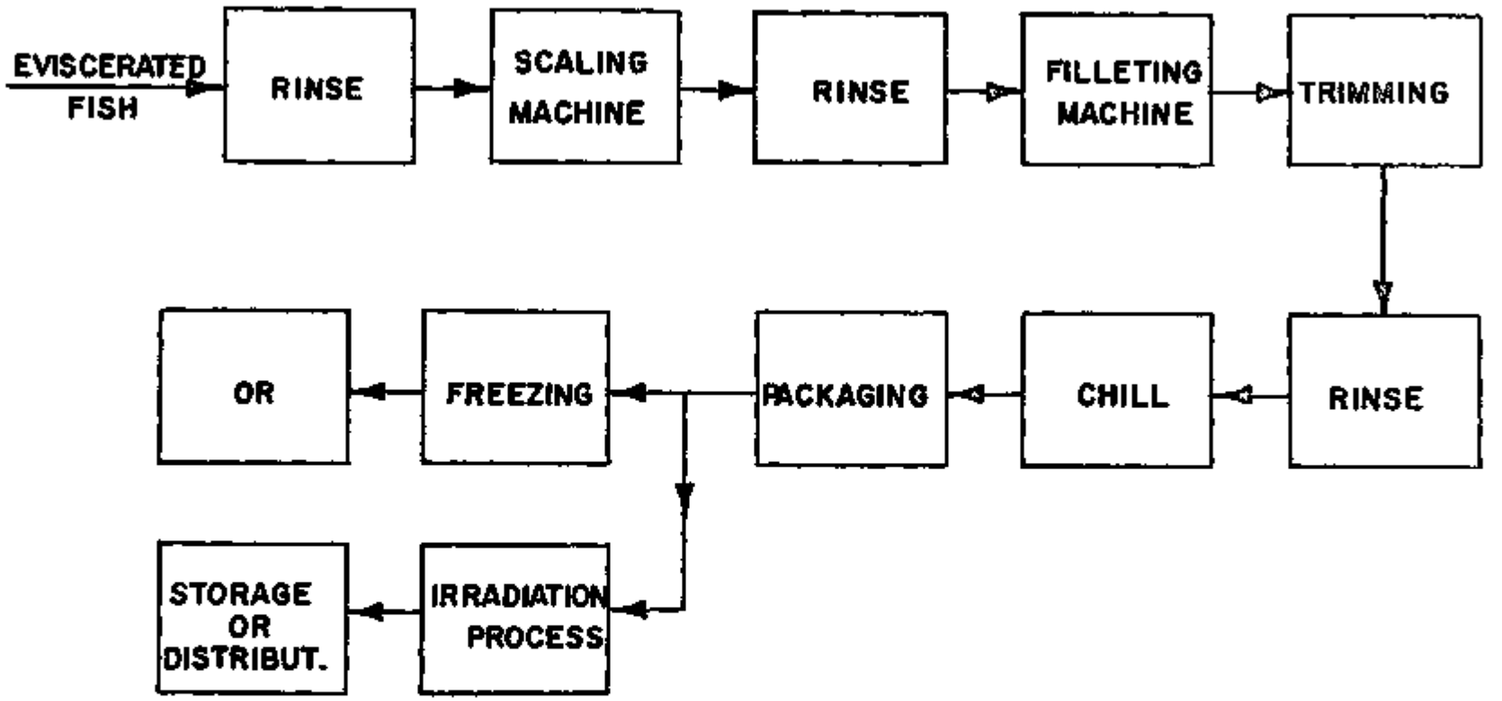

IN-PLANT FACILITY

FIG. 2

OFFICIAL USE ONLY

OFFICIAL USE ONLY

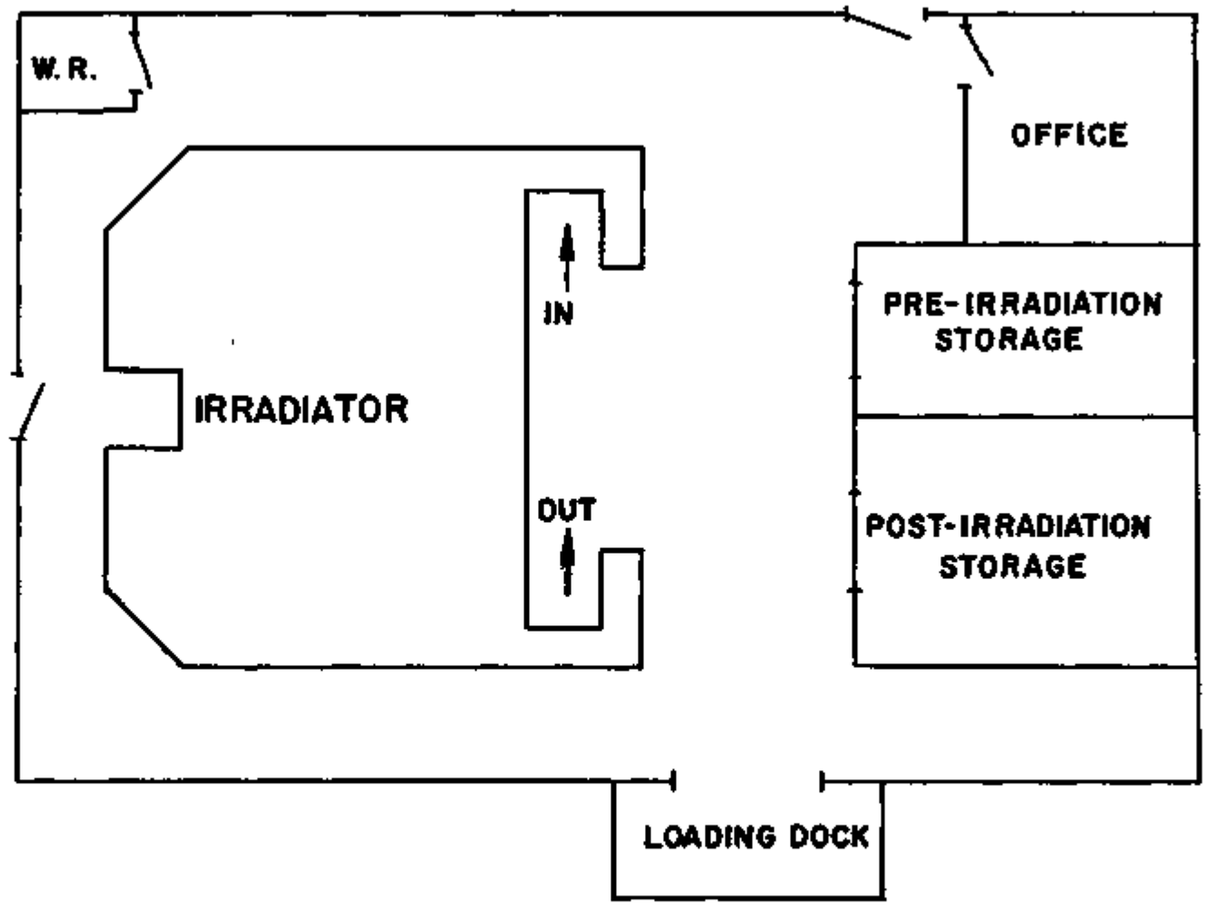

CENTRAL FACILITY - PLOT PLAN

FIG. 3

OFFICIAL USE ONLY

OFFICIAL USE ONLY

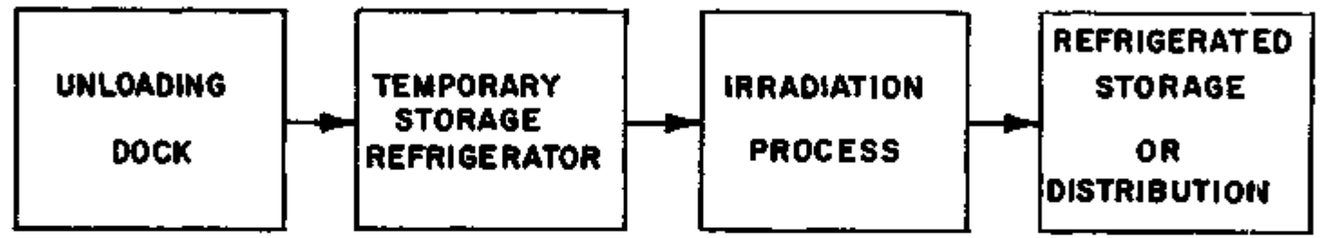

CENTRAL FACILITY

FIG. 4

OFFICIAL USE ONLY

OFFICIAL USE ONLY

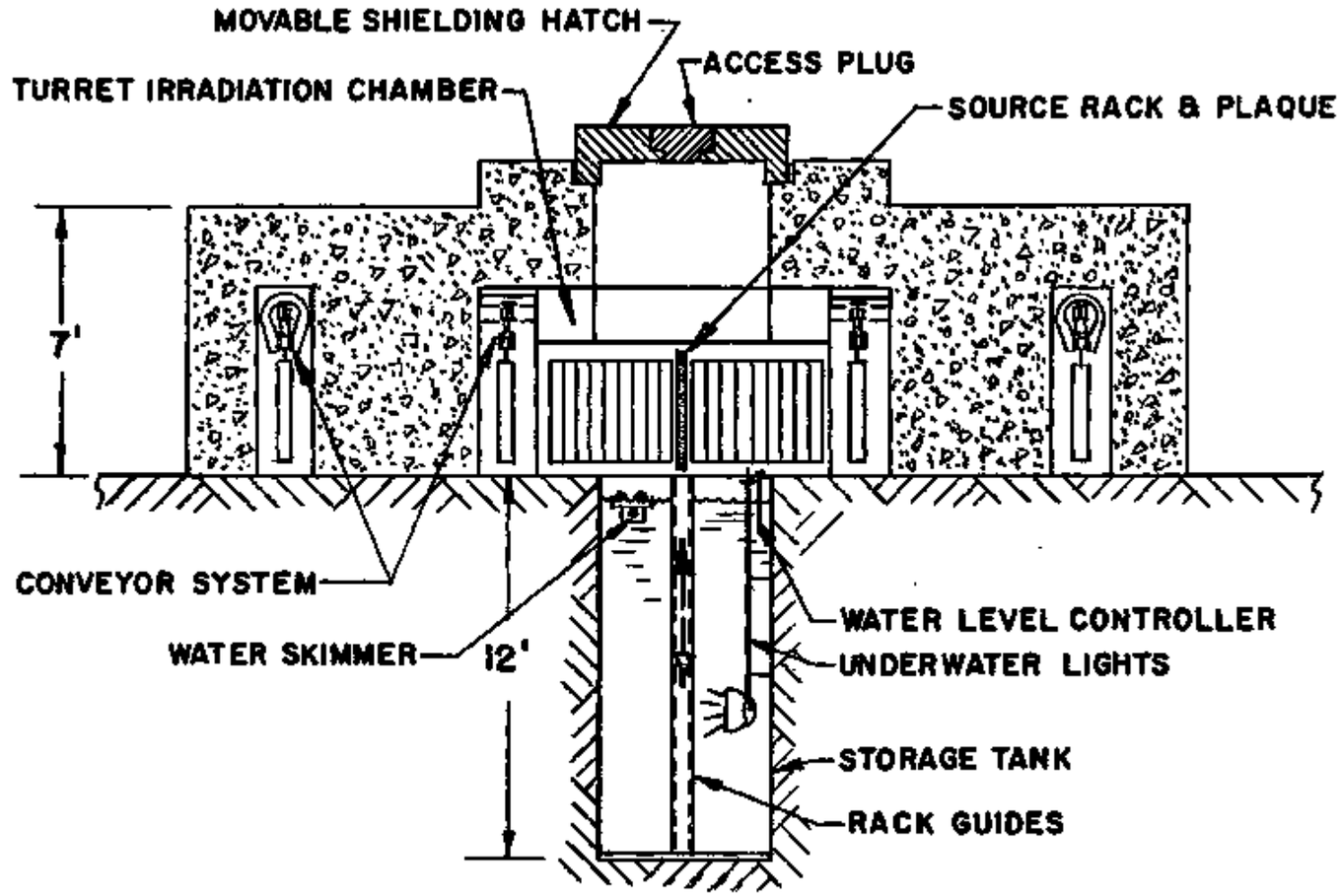

ELEVATION

FIG.5

OFFICIAL USE ONLY

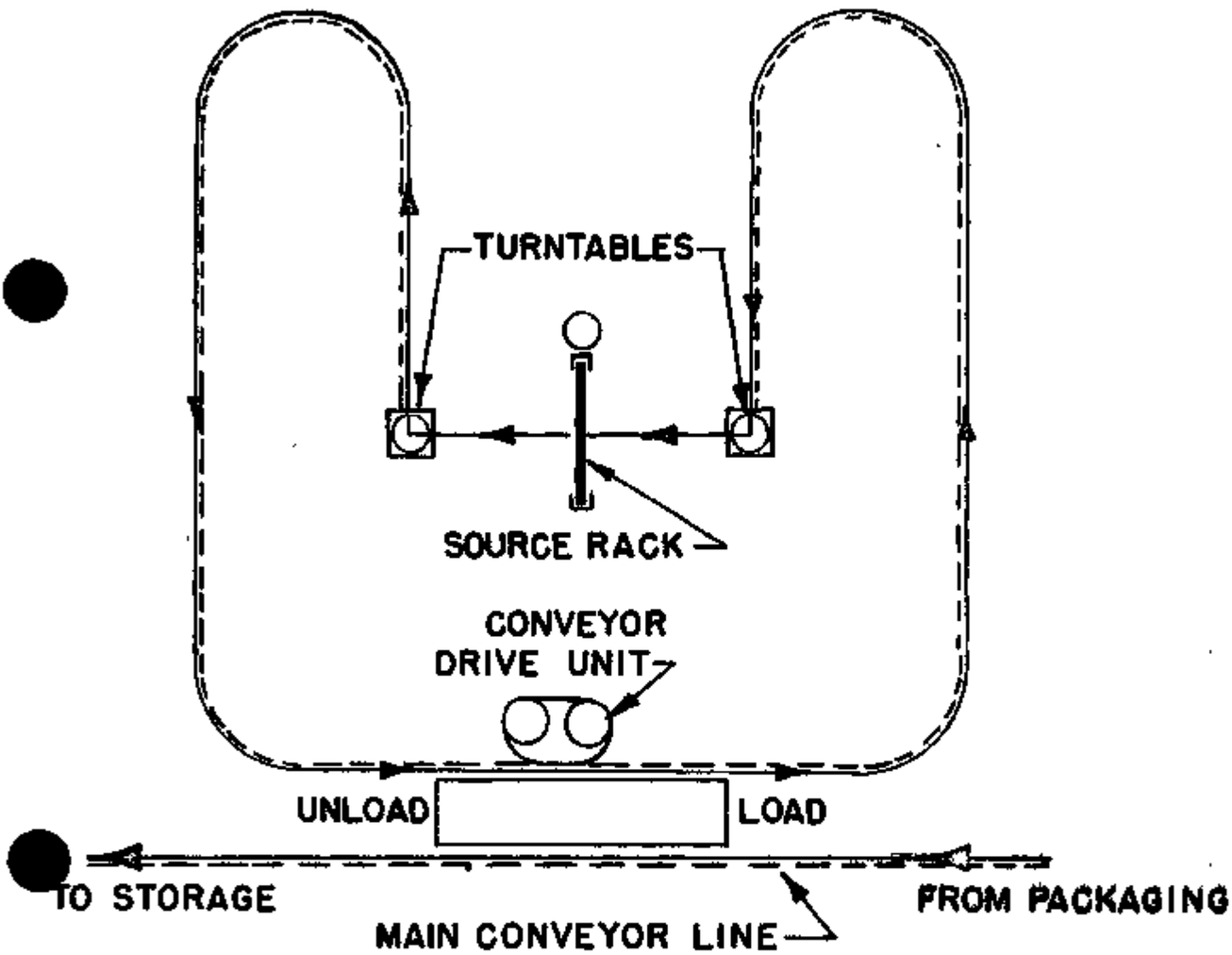

CONVEYOR SYSTEM DIAGRAM

FIG. 6

OFFICIAL USE ONLY

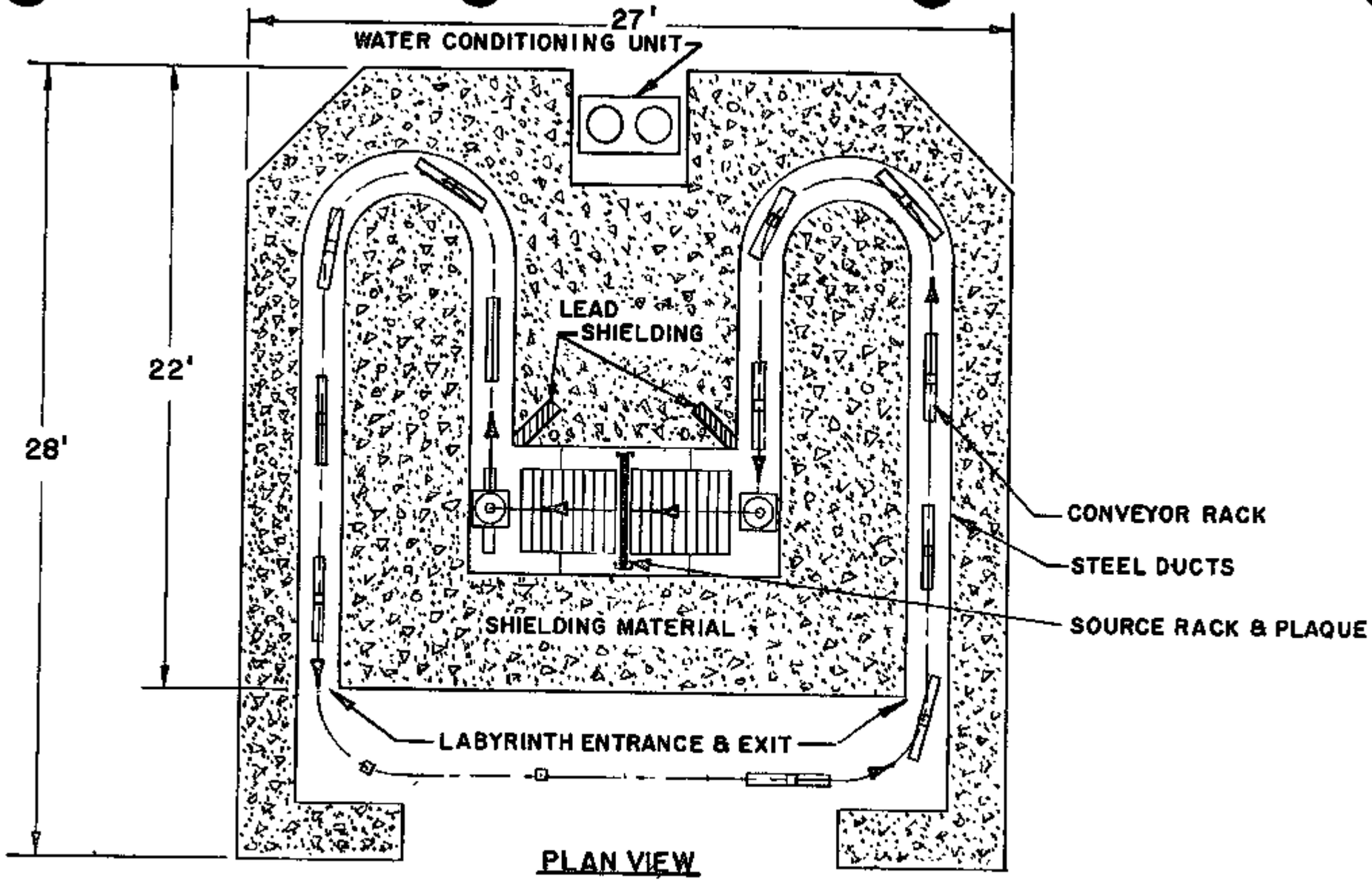

PLAN VIEW

FIG. 7

OFFICIAL USE ONLY

SOLID ROD SOURCE

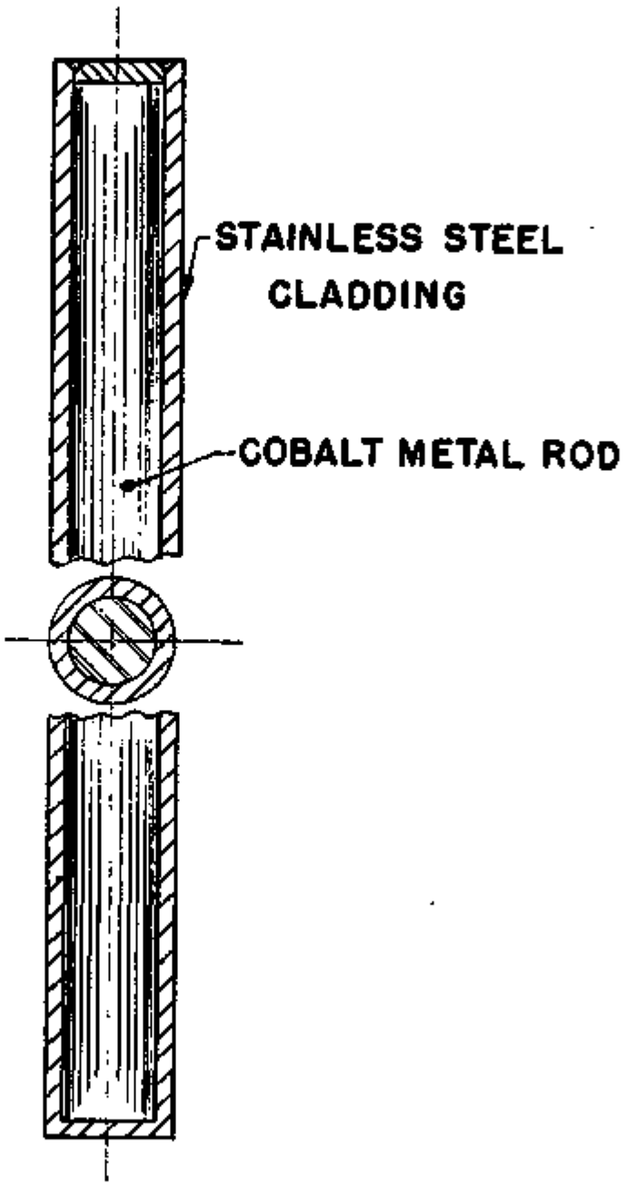

FIG.8

HOLLOW TUBE SOURCE

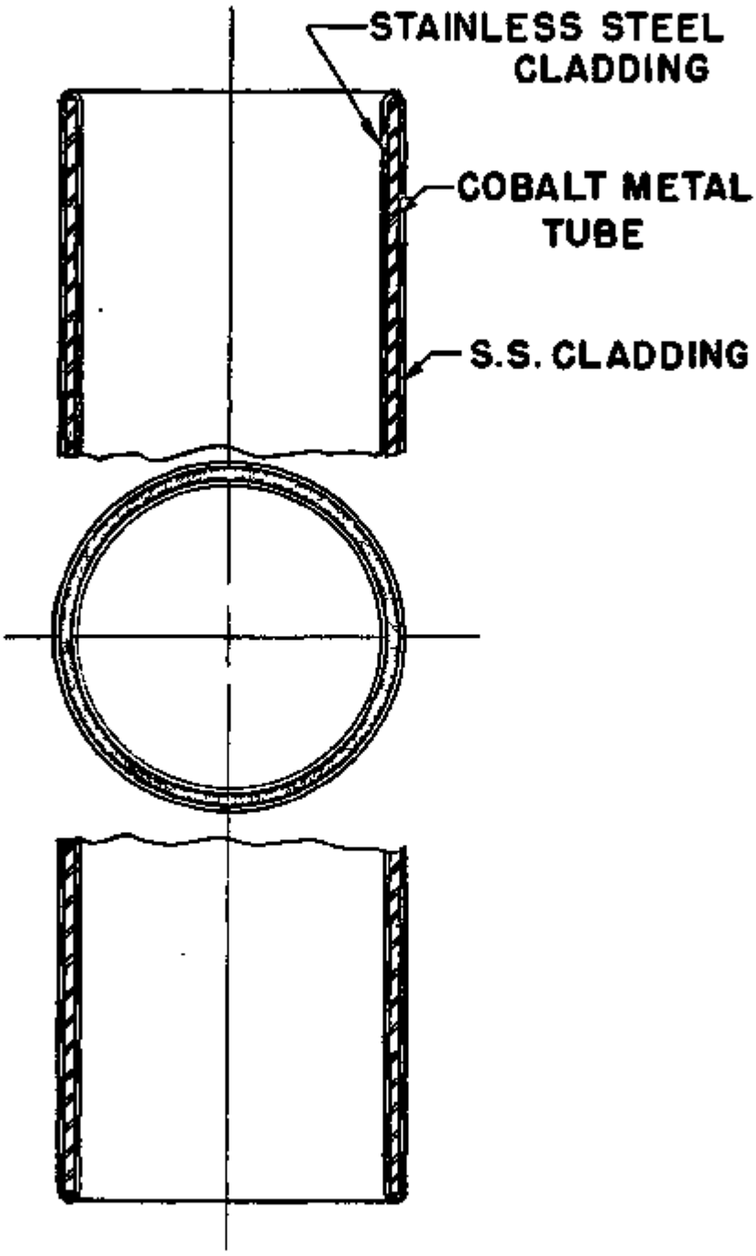

FIG. 9

RECTANGULAR STRIP SOURCE

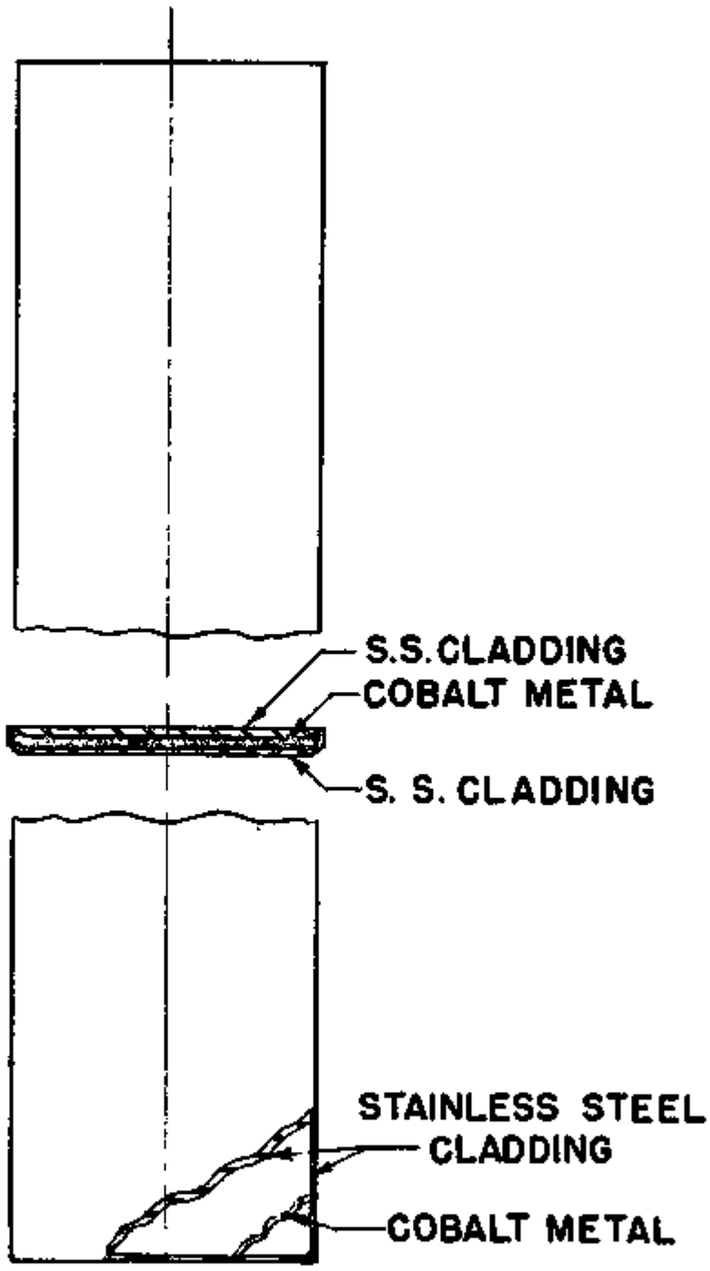

FIG. 30

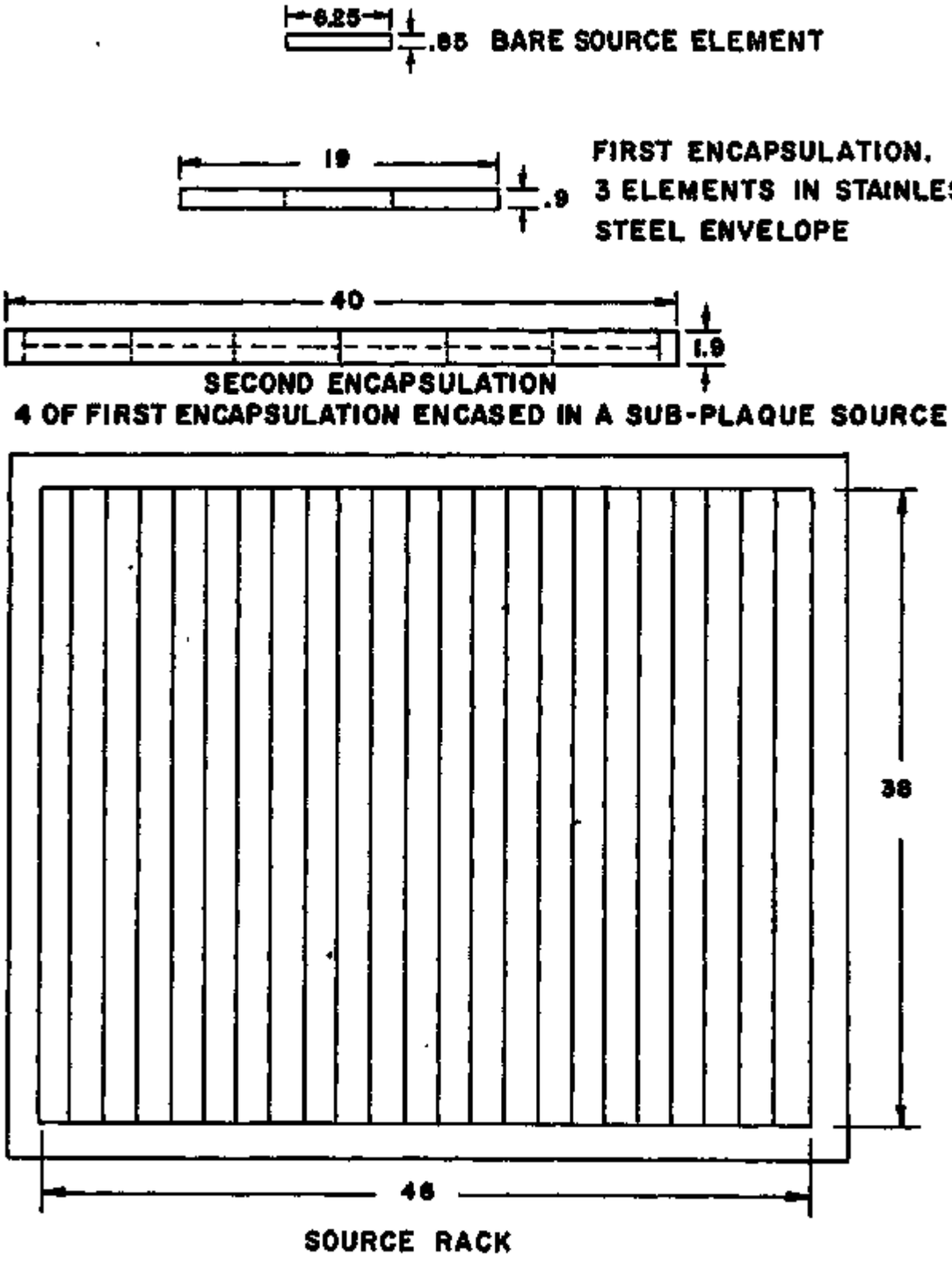
6.25
.85
BARE SOURCE ELEMENT
19
.9
FIRST ENCAPSULATION.
3 ELEMENTS IN STAINLESS
STEEL ENVELOPE
40
1.9
SECOND ENCAPSULATION
4 OF FIRST ENCAPSULATION ENCASED IN A SUB-PLAQUE SOURCE
38
46
SOURCE RACK

FIG. 11

OFFICIAL USE ONLY

March 22, 1961

AEC 719/34

COPY NO. 56

ATOMIC ENERGY COMMISSION

DESIGN OF FACILITIES FOR FOOD IRRADIATION

Note by the Secretary

The General Manager has requested that the attached report by the Director of Isotopes Development be circulated for consideration by the Commission during the week of March 27, 1961.

W. B. McCool

Secretary

DISTRIBUTION	COPY NO.
Secretary	1
Commissioners	2 - 6,61-62
General Manager	7
Dir., Regulation	8
Deputy Gen. Mgr.	9
Asst. Gen. Mgr.	10 - 11
Asst. Gen. Mgr. R&ID	12
General Counsel	13 - 16
Biology & Medicine	17
Congr. Relations	18
Construction & Supply	19 - 20
Finance	21 - 22
Isotope Development	23 - 47
Public Information	48
Licensing & Regulation	49 - 50
Operations Analysis	51
New York Oprns.	52
D. C. Office	53 - 55
Secretariat	56 - 60

OFFICIAL USE ONLY

ATOMIC ENERGY COMMISSION

DESIGN OF FACILITIES FOR FOOD IRRADIATION

Report to the General Manager by the
Director of Isotopes Development

THE PROBLEM

1. To consider a report on the design of facilities for food irradiation.

DISCUSSION

2. The FY 1961 Authorization Bill included a provision that the AEC conduct design studies on facilities for food irradiation and report on these by April 1, 1961.

3. In part to provide necessary background information for these studies, evaluations were made of the technical and marketing characteristics of the fish and fruit industries relative to possible radiation pasteurization of these products. Fish and fruit are the products currently included in the AEC radiation pasteurized foods program (see AEC 719/31). The reports of these studies, (Radiation Preservation of Selected Fruits and Vegetables, Stanford Research Institute; Evaluation of the Technical, Economic and Practical Feasibility of Radiation Preservation of Fish, Massachusetts Institute of Technology; Marketing Feasibility Study of Radiation Processed Fishery Products, U.S. Department of the Interior) were provided Brookhaven National Laboratory which was requested to make the necessary design studies.

4. The Brookhaven National Laboratory report is attached as Appendix "A". It is proposed that this report be transmitted to the Joint Committee on Atomic Energy in response to the aforementioned provision of the FY 1961 Authorization Bill.

STAFF JUDGMENTS

5. The Divisions of Construction and Supply, Biology and Medicine, and Finance concur in the recommendation of this paper.

RECOMMENDATION

6. The General Manager recommends that the Atomic Energy Commission:

a. Approve transmittal to the Joint Committee on Atomic Energy of the report on design of facilities for food irradiation, (Appendix "B");

b. Note that the report will be transmitted by letter such as Appendix "A".

c. Note that this paper is unclassified.

OFFICIAL USE ONLY

APPENDIX "A"

PROPOSED LETTER TO JCAE

1. The FY 1961 Authorization Bill included provision that the Commission conduct design studies of facilities for food irradiation. Attached for the Committee's information is a report prepared in accordance with this provision.

2. The report considers design of research irradiators, a central radiation facility which would be used by several food processors, and an in-plant irradiator to be located in individual food processing plants. Preliminary consideration also has been given to transportable irradiators to be moved to different areas for processing food at various production or harvesting sites. The need for developing specific information on performance requirements (dosage, package size, residence time, etc.) precluded more detailed consideration of conceptual designs of transportable irradiators at this time; however, such studies are planned.

3. Because a facility comparable to a central irradiator has not heretofore been built, there is no firm foundation for considering the elements of cost. Accordingly, the Commission considers that the cost estimates presented in the report are very preliminary.

4. The Commission is prepared to discuss the results of these studies in detail at your convenience.

APPENDIX "B"

CONCEPTUAL DESIGN STUDIES ON FACILITIES FOR RADIATION PASTEURIZATION OF FOOD

O. A. Kuhl
L. Galanter
V. O'Leary
B. Manowitz

Brookhaven National Laboratory
Upton, New York

March, 1961

INDEX

Page

ABSTRACT. . . . . .

INTRODUCTION. . . . . .

PART I - RESEARCH IRRADIATOR. . . . . .

PART II - CENTRAL OR IN-PLANT FACILITY. . . . . .

PART III - TRANSPORTABLE IRRADIATOR. . . . . .

PART IV - SAFETY CONSIDERATIONS. . . . . .

ABSTRACT

1. This report considers design concepts of radiation facilities for radiation pasteurization of foods. Irradiator types discussed include research, central or in-plant and transportable units.

2. Experimental design work on a highly versatile, safe, easily operated food research irradiator has been completed and the first unit fabricated. The research irradiator is essentially a pool type gamma source of approximately 25,000 curies of cobalt 60 and has a capacity of 37 megarad pounds per hour. The irradiation chambers are provided with both temperature and atmosphere control to facilitate experimental work. A distinct advantage of the irradiator is simplicity of operation. A central control panel is so constructed that a moderately trained individual can operate the facility without possibility of endangering himself or others from radiation. The irradiator is of moderate cost and is readily installed at a particular research site.

3. A design concept of a central or in-plant food irradiator flexible enough to be modified into transportable units is considered in detail. Utilizing this design concept a commercial production capacity of approximately 1,000 megarad pounds of product can be processed per hour. In this case

the facility contains a 300,000 curie source mounted on a single plaque. To obtain maximum source efficiency, food packages are moved frontally toward the source. As the package nears the source plaque the source rack drops into a recess permitting the package to pass over its top and be positioned on the other side. The source and irradiation chamber size with its consequent requirement for a large amount of biological shielding necessarily limits this facility to either the central or in-plant type, or certainly to a fixed installation.

4. Utilizing a reduced source strength and smaller irradiation chamber, this design concept can be applied to a transportable irradiator. In this case, shielding weight is the limiting factor. A production rate of 100 megarad pounds per hour is foreseeable. Counter-balancing this lower production rate, however, are the advantages of ready mobility, the ability to handle small load premium products and the potential of demonstrating the feasibility of radiation pasteurization on a wide variety of seasonal crops at the harvest or production sites.

5. Safety considerations are of prime concern throughout this study. The report is concluded with a hazards evaluation outlining various procedures and safety devices applicable to any of the irradiator types.

INTRODUCTION

1. Previous work on radiation pasteurization of food has indicated the need for development of concepts of pre-commercial and commercial irradiation facilities including research, transportable, central and in-plant units. The purpose of this study is to formulate more accurately design concepts which could be made applicable to these requirements. Food products of particular reference include fish and fruit, since extension of shelf-life of these products with radiation appears to offer quality and marketing advantages.

2. The different types of irradiation facilities are described as follows:

a. Research Irradiator: A highly flexible low capacity irradiator specifically designed to support a wide range of research requirements.

b. Central Facility: A separate plant comparable to a refrigeration plant which would be accessible to and used by several food processors for multiple product handling.

c. In-Plant Facility: A smaller specialized modification of the central facility which would be installed in individual food processing plants and be used for limited product processing.

d. Transportable Irradiators: These include both truck and rail-mounted irradiators as well as units which could be disassembled and transported into food producing areas during harvesting seasons.

3. Part I of this study is a discussion of the design of a research irradiator. Part II contains a conceptual design of a central or in-plant facility based upon a current method of fish processing.[1/] For purposes of simplicity, a particular method for processing fillets was chosen for discussion realizing that this process could readily be made applicable to the processing of either whole fish or other marine products. Furthermore the process described is adaptable to radiation pasteurization of fruits.[2/] Part III of this report discusses transportable irradiators. Part IV sets forth safety considerations in irradiator design and operation.

1/ Evaluation of the Technical, Economical and Practical Feasibility of Radiation Preservation of Fish - NYO-9182 Available - Office of Technical Services, Department of Commerce, Washington 25, D. C. - $1.75

2/ Radiation Preservation of Selected Fruits and Vegetables - SRIA-30 Available - Office of Technical Services, Department of Commerce, Washington 25, D. C. - $3.00

PART I

RESEARCH IRRADIATORS

1. This part of the report considers a food research irradiator which has been designed for use in the Atomic Energy Commission radiation pasteurization of foods program. One of these units has already been constructed and is currently being installed at the Massachusetts Institute of Technology.

2. The entire system is designed with simplicity and safety in mind. It is capable of being operated by an individual not highly trained in various nuclear aspects. For these reasons, it appears to be an ideal irradiator for the purpose of supporting research work on irradiation pasteurization of food.

3. The research irradiator is essentially a pool-type gamma radiation facility. A two plaque source configuration containing approximately 25,000 curies of cobalt 60 is positioned at the bottom of a water-filled stainless steel tank, 6 feet in diameter and 12 feet deep (Fig. 1).*

4. The cobalt 60 source is in the form of strips assembled into two plaques approximately 20" x 20" x 1/8". The plaques are in parallel vertical planes, and are mounted in racks on the floor of the irradiator. Food samples to be irradiated are placed

* Secretariat Note - Not attached; copies will be available at Commission Meeting during discussion of this paper.

in water-tight canisters and are lowered into the radiation field by means of electrically driven screws rod mechanism. Three canisters are provided, one of which is positioned between the plaques and the others outside of the plaques. Although designed primarily for research, the irradiator is capable of handling food packages of various sizes in commercial use. The maximum size sample which can be accommodated is 14" x 18" x 6".

5. The design is intended to provide a radiation dose rate of 370,000 rad/hr at the center of a package of unit density. For a package 18" x 14" x 6" the production capacity is 37 megarad pounds per hour, and the maximum to minimum dose variation is approximately 1.5. If greater uniformity is desired it may be achieved at the expense of a smaller production capacity. For instance, for a package 12" x 12" x 5" the production capacity would be about 19 megarad pounds per hour and the maximum to minimum dose variation in the package approximately 1.25.

6. During irradiation both temperature and atmospheric control can be maintained in the canisters. The temperature is variable from 10°F to 150°F. Various gases may be introduced into the canister during the irradiation to alter atmospheric conditions.

7. The exposure time, and consequently the radiation dose, can be pre-set on the control panel which is positioned above the tank. The electrical system automatically removes each canister from the radiation field when the appropriate dose has been received.

8. A package water purification system is provided as part of the unit. Its purpose is to keep the water clean and to decontaminate it in the event of a source encapsulation failure. Underwater lights are also provided. The safety system consists of a water level control which activates an alarm and a solenoid valve to a water inlet when the water height decreases by 6". Included also is a remote area radiation monitor capable of activating alarms and other safety devices when the radiation level exceeds a predetermined limit. The radiation level at the pool surface is less than 1 millirad per hour.

9. Cost of this irradiator, including the cobalt-60 source, is approximately $75,000.

PART II

CENTRAL AND IN-PLANT IRRADIATOR

General Considerations

1. The following background information on fish processing technology was used in a conceptual design study of central or in-plant irradiators. The entire production of sea food in the United States is about 2.4 billion pounds of which approximately 431 million pounds are fillets. The fish are caught, and are generally eviscerated and stored at temperatures ranging from 32° to 40°F. on board the fishing boat, until they are delivered to the processing plants. In the plant a conveyor system takes the chilled eviscerated fish product through a series of steps such as the following (Fig. 2):

a. Rinse to remove ice and slime.

b. Scaling.

c. Rinse.

d. Filleting - principally by automatic machine.

e. Trimming - a manual operation.

f. Rinse.

g. Chilling.

h. Packaging - both automatic and manual.

i. Freezing.

j. Storage or distribution.

2. Radiation pasteurization treatment could be introduced at Step 1, in lieu of the freezing step. In many processing plants the packaged product is sent to a central freezing plant. Similarly, a product to be irradiated could be sent to a central irradiation facility.

3. Such a plant would require large walk-in refrigerators for pre-irradiation and post-irradiation storage, adequate loading and unloading areas, the irradiation facility, and auxiliary service areas (Fig. 3). The radiation process would normally proceed in three steps: (1) temporary refrigerated storage, (2) irradiation treatment, and (3) refrigerated storage or distribution (Fig. 4).

Process Description

4. The packages will move from the packaging position to the irradiation facility input area (Figs. 5, 6, 7). They are chilled to 35°F or lower prior to being loaded on the irradiator conveyor. The conveyor will hold four packages vertically so that the largest surface area will be presented to the surface of the source plaque. At the present time a variety of commercial shipping packages are employed. The size of the package used in this report is 18" x 14" x 5", which can be made up of a single block of sealed wrapped product or of a number of smaller packages. It is assumed that the sealed bulk package has sufficient insulation value that no refrigeration is required for the 90 minutes or so the fish is in the irradiator. The

conveyor racks are then loaded and will move edgewise into a labyrinth entrance and proceed to the irradiation chamber where they will move sidewise with the largest surface parallel to the source.

5. In the irradiation chamber approximately 18 racks containing 72 of the previously described packages will move uniformly toward the source in increments of 5.5" every 5.5 minutes. The source plaque at appropriate intervals is lowered so that its top is level with the irradiation chamber floor. The rack nearest the source on the input side then moves to the other side of the source irradiation position while all other racks move one increment. The source then returns to the irradiation position. The length of time for the operation of this sequence is controlled by a timer at the control panel.

6. Once the chamber is loaded, one rack load, or approximately 200 pounds of product will be discharged every 5.5 minutes, and will have received a radiation dose of 5×10^5 rads. The radiation processed product will be discharged from the output side of the facility and either stored at a temperature of 35°F to await shipment, or loaded directly in refrigerated conveyances for distribution.

Irradiator Design Concept

7. The essential components of an irradiator of this type include a water tank for source storage, source lifting and synchronization mechanism, irradiation chamber, irradiation chamber cover, labyrinth conveyor ducts, conveyor, shielding, and safety devices. The irradiator is designed to be assembled on a concrete slab and can be test operated before the required shielding is put into place.

8. The irradiator specifications are listed in Table I.

Table I

Irradiator Specifications

Production Rate	1000 megarad pounds per hour
Total Dose	5×10^5 rad max.
Uniformity within Package	$\pm$ 20%
Package Dimensions	14" x 18" x 5"
Voids in Package	7%

The irradiator is estimated to have an annual production capacity of 2,000 tons based upon a throughput of 1 ton per hour and a 40 hour/wk operation.

9. Labor involved for the operation of this facility consists of two men per shift for the loading and unloading of the conveyor belt. A third man would handle the source, the operation of the plant, and would be technically competent to handle minor breakdowns and maintenance of the equipment.

10. The over-all dimensions of the irradiator are approximately 27' x 28', which could be easily accommodated in a building 40' x 62'. The building would also include space for walk-in refrigerators with a storage capacity of approximately 10 tons of fish. A ton of fish packed in 50-pound boxes would occupy a space 2'4" x 3' x 4'2" high or approximately 29 cubic ft. The building would be a one floor facility with limited office space.

11. The source storage tank, 5 ft. square and 12 ft. deep, will provide shielding for the assembly and storage of the source plaque when not in use (Fig. 5). It will contain a source rack and guides along which the rack can be moved up and down from the irradiation to the storage position. A motor located outside the irradiation chamber, with gear and chain mechanisms, will provide a positive drive for source rack movements. A water conditioning unit will provide water of high purity and low corrosion potential for the source storage tank. This unit will also serve to detect and collect any potential radioactive contaminants in the water. A skimmer will be used to keep the surface of the water free of dust.

12. When the radiation source is assembled and ready for use, a removable grating will cover the water tank opening. The source is raised or lowered into the irradiation and non-irradiation positions through an opening in the grating cover.

13. The inside dimensions of the irradiation chamber are 4' x 4' x 11'. This is sufficient to contain the source plaque (46" wide and 38" high), together with packages to a depth of 50" at the front of and in back of the source. The width of the chamber is just large enough to accommodate the width of the source rack and the guide channels. A movable hatch at the top of the irradiation chamber provides access for maintenance and introduction of source shipping casks. Labyrinth entrances are designed to attenuate exterior radiation to a safe level.

14. The conveyor system of the overhead power and free trolley type carries the material to be irradiated in and out of the irradiation chamber. The drive system moves the racks containing the packages from the loading area into the input labyrinth entrance and to the irradiation chamber. Another mechanism actuates the system which moves the packages sidewise at regular increments of time and distance toward the source plaque. A timer regulates these increments which are controlled by the total radiation dose received. The packages on each side of the source plaque are butted and moved toward the plaque at increments of 5.5", with the exception of the rack on the input side nearest the source. When the source moves down into the tank this rack moves approximately 11" into a position adjacent to the source on the output side. Mechanical stops control the movement of all packages. These are synchronized with the movement of the source from the

operating to the down position. After the racks have moved through 18 irradiating positions, they are picked up by the discharge conveyor system and carried out through the output labyrinth to the unloading area.

Radiation Source Design

15. The principal factors considered in the cobalt 60 source design studies were source efficiency, specific activity, source element dimensions, dimensional stability, safety of source encapsulation and economics. For the purpose of this study it was assumed that sources would be available in the required shape and at the desired activity level.

16. Examination of source efficiency may be divided into two parts: (1) the inherent efficiency due to the shape of the source elements, and (2) the effect of source geometry and source-to-target geometry on the absorption of photon energy. For a fixed target size, the target density and composition will have a pronounced effect on the efficiency of utilization of gamma energy. For the purpose of this study, however, the target will be assumed to be of unit density and water equivalent.

17. The following source element shapes were considered:

a. Thin rectangular strips

b. Solid rods

c. Hollow tubes

Source Element Efficiency

18. The design of these source elements is illustrated by Figs. 8, 9 and 10. The efficiencies of the three elements, both clad and unclad, were compared by calculating the gamma self-absorption. For purposes of comparison, element widths or diameters were made the same. The results are listed in Table 2.

Table 2

	Rectangular Strips	Hollow Rods	Solid Rods
Source Element Dimensions	10" x 0.75" x .034"	0.750" O.D. .682" I.D.	0.75" D x 10" long
% Self-Absorption (unclad)	3.90	6.0	17.9
% Self-Absorption, .130" Stainless Steel Cladding	5.9	14.0	18.7

19. Examination of these results indicates the inadvisability of using solid rod sources because of the attendant greater self-absorption. For example, if 300,000 curies are required for rectangular strips, then

$$\frac{(1-.125)}{(1-.397)} \times (3 \times 10^5) \text{ or}$$

4.37×10^5 curies would be needed for solid rod sources. At $1.00 per curie, the initial cost of the source would be $137,000 higher to do the same work. In the case of hollow rod sources, the difference is not so great. However, heat transfer problems may prove to be the limiting factor in the activation of hollow tubes. The calculated values for tubes are only approximations.

Effect of Source Geometry and Source-to-Target Geometry on Over-all Efficiency

20. In the design of the irradiator, the objective is to make the source as transparent to its own radiation as possible, and to do the opposite with regard to the target. To achieve the former result one should use a radiation source which is thin so that large values of surface-to-volume are obtained, thus decreasing self-absorption. A practical limit is approached, however, in the extension of this principle, since structural stability decreases and the required specific activity per unit mass increases with decreasing source thickness. The required specific activity may approach values theoretically unattainable.

21. Another way in which source transparency may be increased is to dilute material of high specific activity and high density with inert material of low density. A uniform dispersion of activity is probably optimum to achieve uniform dose distribution across the front section of any target facing the source. One can also resort to the technique of spacing individual source elements, leaving air gaps between them. However, this technique is limited by the maximum tolerable dose variation in a target because of the "ripple" effect on the frontal face of the source. Calculations have shown that the maximum spacing between source elements should be approximately equal to the distance between the target face and the radiation source.

22. In the case of solid targets, the only way in which the fraction of absorbed energy may be increased for a fixed source size and shape would be to surround the source with as large a volume of target as possible. The limitations here are the over-all size of the irradiator, the amount of biological shielding, and the required material flow pattern with its inherent mechanical problems.

Source Design Concept

23. Taking into account the aforementioned factors the following parameters were used to achieve reasonable source efficiency and practical irradiator size.

a. The source would be composed of a series of thin rectangular elements arranged in the shape of a single thin plaque.

b. The size of the facility would permit the simultaneous irradiation of 18 rows of packages equally distributed on both sides of a single plaque.

Source elements measuring 6.25" x 0.85" x 0.034" were selected for two reasons. First, they can easily be shipped in containers of reasonable size and weight, and second, it is possible to produce them in existing reactors.

Table III

Summary of Source Requirements and Performance

Total Activity Required	3.09×10^5 curies
Source Piece Dimensions	5" x 0.75" x .030"
Specific Activity Average	38.0 curie/gram
Total Number of Pieces	288
Area of Plaque	38" x 46"
Average Production Rate	1000 megarad #/hr
Throughput Rate	2000 #/hr
Residence Time	1.53 hours
Total Replacement Required After 5 yrs.	$.97\ (3.09 \times 10^5) = 2.96 \times 10^5$
Over-all Efficiency	29.2%

Source Replacement

24. The source replacement calculations were based on an annual fixed percentage sufficient to establish the original total curie level. The curie requirement based on 10% replacement per year for 5 years is summarized in Table 3. Over this period the total curie replacement would be 0.957 times the original amount at an average specific activity of 1.91 times the original value. In comparison, for a 20% replacement per year, the total amount to be added would be 1.30 times the original amount at an average specific activity of 1.30 times the original value. This means that the total replacement of cobalt 60 may be reduced by lowering

the fraction of the source replaced per year. To accomplish this, however, the specific activity of the replacement cobalt 60 must be higher than that of the cobalt 60 being replaced.

Rack and Source Plaque

25. The source plaque will be comprised of a number of individual elements approximately 0.85" wide and 6.25" long (Fig. 11). The cobalt metal irradiated in the reactor may be nickle-plated, and encapsulated in aluminum for activation. The individual cobalt 60 source elements de-jacketed from the aluminum irradiation containers will be inserted into stainless steel envelopes, three to an envelope. The open end of the envelope will be remotely welded and the assembly tested for leaks. Four of these subassemblies, 0.85" wide and 19" long, will in turn be inserted into a larger stainless steel envelope, the open end of which will be crimped, welded, and tested. 24 of these assemblies, each 1.90" wide and 38" long (exclusive of 1" extensions at each end which are used to mount the assembly in the rack), will make up the required source plaque, 46" x 38".

26. The rack will be designed to hold the 24 source units in a vertical position with a slotted section at each end to accommodate the one-inch extension. The rack frame will be of extra heavy construction. The vertical edges will ride in stainless steel guide channels. Chains mounted to the rack assembly and driven by a motor are used to raise and lower the source. Assembling and dismantling of the source plaque is easily

accomplished. The upper horizontal member of the rack is detachable. This holds the sources in the rack, and its wedge-like design enables the entire rack to reposition any improperly positioned package. When this bar has been removed the sub-assemblies can be easily removed for rearrangement or replacement, by means of underwater tools.

Cost Estimate

27. The estimated costs of the irradiator excluding the cobalt 60 source and building in which to house it is $60,000. A 40 ft. by 62 ft. building which would serve merely to provide shelter to the irradiator, but including the 2 refrigerators, is estimated to cost $231,000. At current AEC prices the cobalt 60 source would cost $309,000 plus an additional $10,000 for encapsulation and transportation. Accordingly, total cost for the facility is $610,000.

PART III

TRANSPORTABLE IRRADIATORS

1. Transportable irradiators, capable of ready movement from site to site, are desirable for selected food processing requirements. The primary advantage of such irradiators would be their ready mobility and therefore their ability to handle small load premium products and their ability to demonstrate the feasibility of radiation processing of a wide variety of seasonal crops and products at the site of production or harvest.

2. In this study only preliminary consideration has been given to the design of transportable irradiators. More detailed analyses are planned. For the purpose of this report three variations of such units can generally be identified:

a. Truck mounted

b. Railroad car mounted

c. A demountable unit in which the components are separately transported and reassembled at the site.

3. For truck mounted irradiators state regulations imposed a weight limit of approximately 10 tons per axle. This restricts the size of the irradiator including source dimensions and curie content, radiation chamber volume and size and number of packages. The production capacity of such an irradiator could approach 100 megarad pounds per hour. Primarily because of the reduced

size of the irradiation chamber the efficiency of the system would be lower than that of the central facility discussed in Part II.

4. In the case of the railroad car mounted irradiator, the load limit is approximately 125 tons. The efficiency of source utilization would be about twice that of the truck unit. Similarly the production capacity would be doubled but still well below that of a permanent type facility.

5. An alternate concept with somewhat less mobility is a demountable facility in which all of the components are separately transportable and would require re-assembly at the site. Several designs of this type are possible. One would be a water tank facility similar to the research irradiator described in Part I. Its capacity would be about the same as the railroad facility and costs should be considerably lower. The entire unit including the cobalt in its lead container could be transported in an ordinary trailer truck.

6. Site preparation prior to erection would be required. This consists primarily of excavating a hole in the ground about five feet square and twelve feet deep with a concrete pad at the base of the hole. Shed type weather protection would also be transportable. Such units can be erected and dismantled in several days.

7. An on-grade water tank facility can also be designed. This would require the minimum on-site preparation but would require about twenty feet of head room. Such equipment could be transported by truck.

8. A more sophisticated approach would be a facility very similar to the central plant design described in this report but with transportable shielding - such as ferrophosphorus or concrete block. This unit would be less flexible and would require a longer period to erect but might serve more as a regional facility.

PART IV

SAFETY CONSIDERATIONS

Installation and operation of facilities employing large radioisotope sources must take into account certain safety requirements. The following are possible problems and safety measures incorporated into the design of the research irradiator described in Part I and the concept of the central facility discussed in Part II.

1. Contamination of Area or Product

The cobalt-60 source elements will be doubly encapsulated. Each encapsulation will be individually tested. Samples of storage tank water will be tested weekly or bi-weekly for radioactive contamination. A water conditioning unit for filtering and demineralizing the tank water will contain a sensitive detector adjacent to the ion exchange column for detecting any activity picked up from the water. Since the package does not come in direct contact with the source, airborn activity can be the only means of contamination. An air monitor would serve to detect a minute amount of air contamination and activate a mechanism for submerging the source.

2. Accidental Exposure of Personnel

Safety devices - mechanical and electrical - will be used to forestall this possibility. The shielding cover over the

irradiation chamber opening will be locked in the closed position. When the source is in the up or irradiating position, interlocks will prevent the cover from opening. Should the source cover be opened by any other means, the source drive mechanism will automatically return the source to its storage position on the tank floor, at which point the mechanism becomes inactive. Automatically controlled gates will cover the input and output duct entrances. Opening and closing will be activated by the conveyor racks. Any other attempt to open these doors will shut down the conveyor and cause the source moving mechanism to return the source to its storage position.

Flashing lights and an illuminated sign will indicate that the facility is in operation.

3. Malfunctioning of Mechanical or Electrical Equipment

A power failure or electrical circuit failure with the source in an operating position is always a possibility. Remote operating devices will insure the return of the source to the storage position until power is restored or the electrical circuit is repaired. Monitoring equipment will be of the fail-safe type, indicating malfunctioning of the operating devices by audible and visual signals. The source rack consists of a heavy rigid frame designed to safely contain the source elements in a plaque. In case of jamming, it can be forced down into the tank without damage to the rack or the sources, by means of the emergency drive

mechanism. Should this fail, a special plug in the irradiation chamber cover can be removed and a tool used to actually push the rack back into the tank.

4. Unsafe Operating Procedures

In any mechanical or electrical operation, there is no substitute for competent operators. Operators must be aware of all hazards involved, and be able to react promptly to emergencies. They must know in detail how the facility functions. There must be a definite plan of operation, and no deviations permitted without carefully considered approval by those in charge. Only authorized personnel should be permitted to operate the unit.

The safety rules outlined in this part of the report should preclude any attempt at operating in an unsafe manner.

The qualifications required for the supervisor of this facility should include

(a) Reliability and practical common sense

(b) Mechanical and electrical aptitude

(c) Basic knowledge of radiation hazards

(d) Ability to intelligently use basic radiation instruments.

5. Unsafe Methods of Loading Source Material Into or Out of the Facility

All loadings, unloadings, or rearrangement of sources should be performed by trained personnel from an outside service organization.

The sources are always shipped in casks which have been carefully checked for safe shielding and against any possible hazards. These are securely bolted and sealed, and should be kept this way until they are about to enter the tank, at which time all fastenings holding the access cap should be removed. Instruments for removing the cap should be fastened to it at this time, following which it can be lowered to the tank bottom. The cap can then be removed, the sources removed from the cask and placed on the tank floor. The cask can then be removed from the tank and the sources assembled in the rack. Survey meters should be used throughout all these operations. A reversal of this procedure would be necessary for removal of the source, and a combination of these procedures would be used for source replacement.

6. Leakage in Storage Tank

Instead of initially installing the tank in an unprotected hole in the ground, it may be advisable to provide double containment by placing it inside a concrete tank.

A water level probe will give early warning should the water level fall by as much as six inches. It will also activate a solenoid valve which will open and allow water to flow into the tank. A radiation monitor will be positioned above the water surface. Should the water level fall when the source is in storage position, the radiation detector will note the increase in radiation and give warning by means of an audible and visual alarm.

Additional provisions and procedures are under consideration to meet the possible emergency of a complete loss of water.

7. Radiation Damage to Vital Control Instrumentation, Electrical Wiring, etc.

All drive motors and wiring will be located outside the radiation area. Any wiring which must of necessity be exposed to radiation will be carefully selected for radiation resistance, shielded, and periodically checked and replaced.

The in-cell radiation monitor must be calibrated at regular intervals. The only other equipment likely to be affected by radiation would be the wiring for the underwater lights. This is not part of the safety system, and will require only periodic inspection and possible replacement of exposed cable.

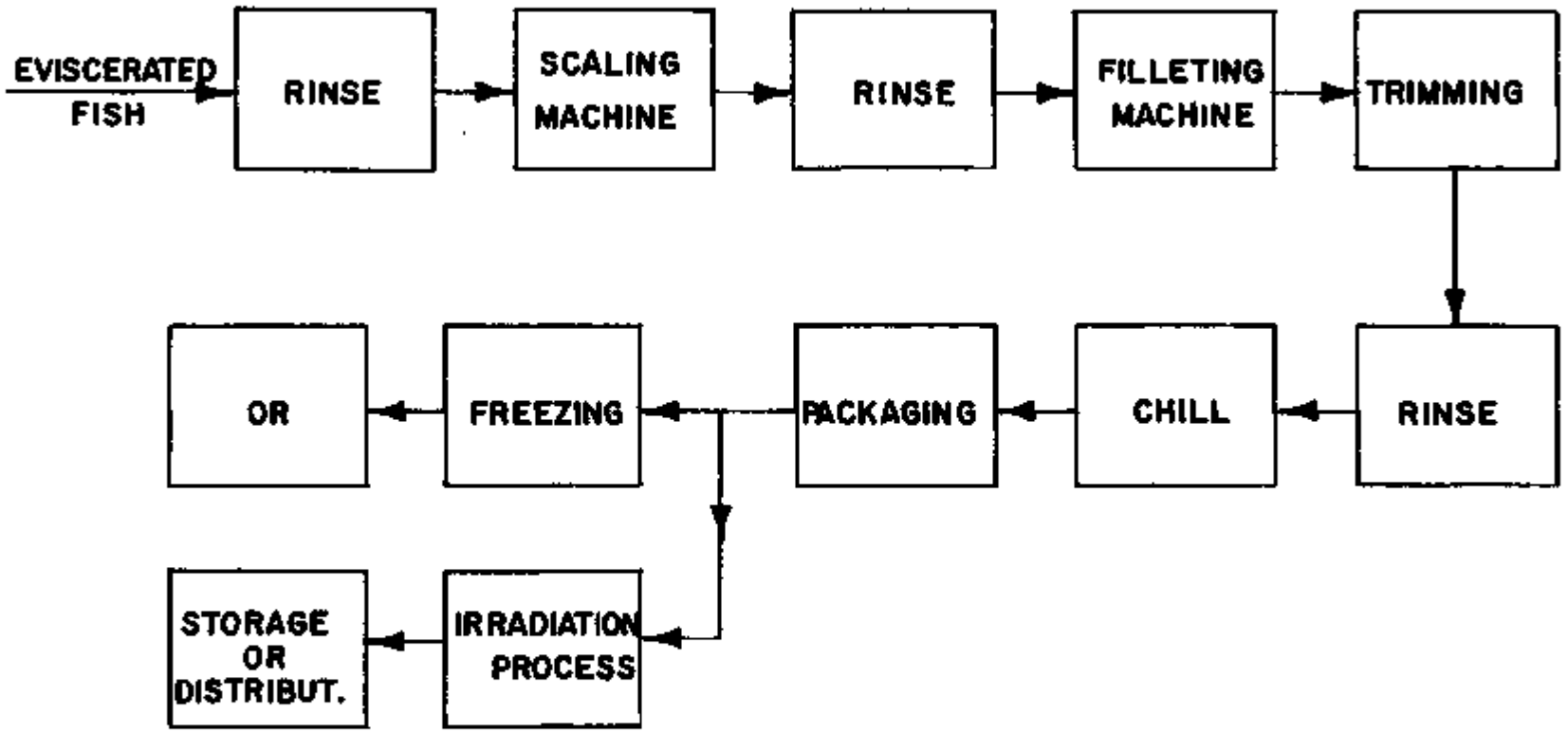

IN-PLANT FACILITY

FIG. 2

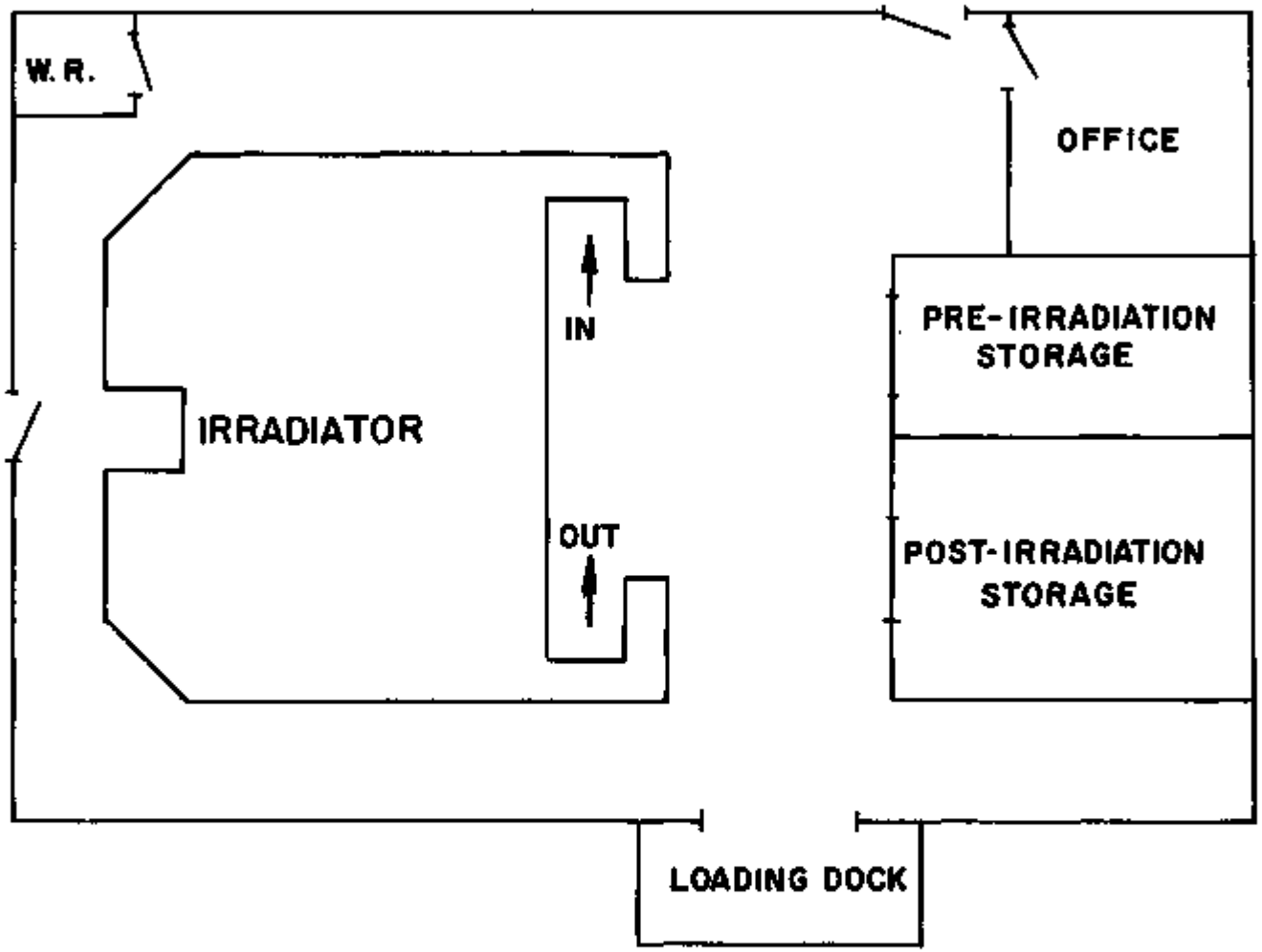

CENTRAL FACILITY - PLOT PLAN

FIG. 3

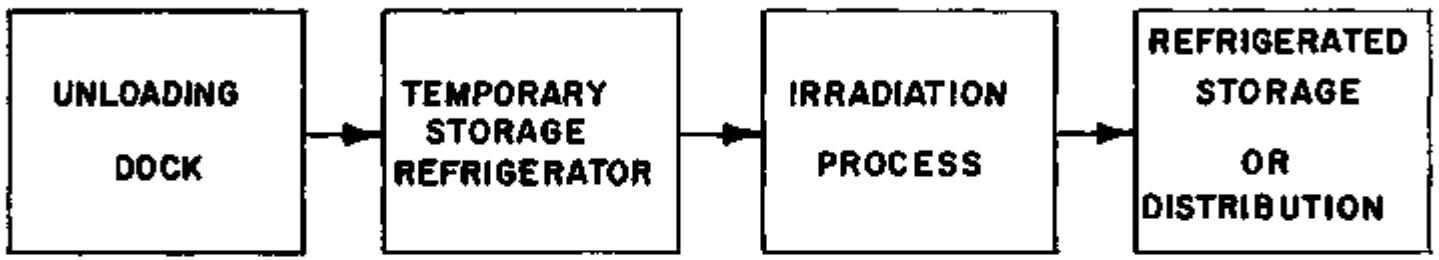

CENTRAL FACILITY

FIG. 4

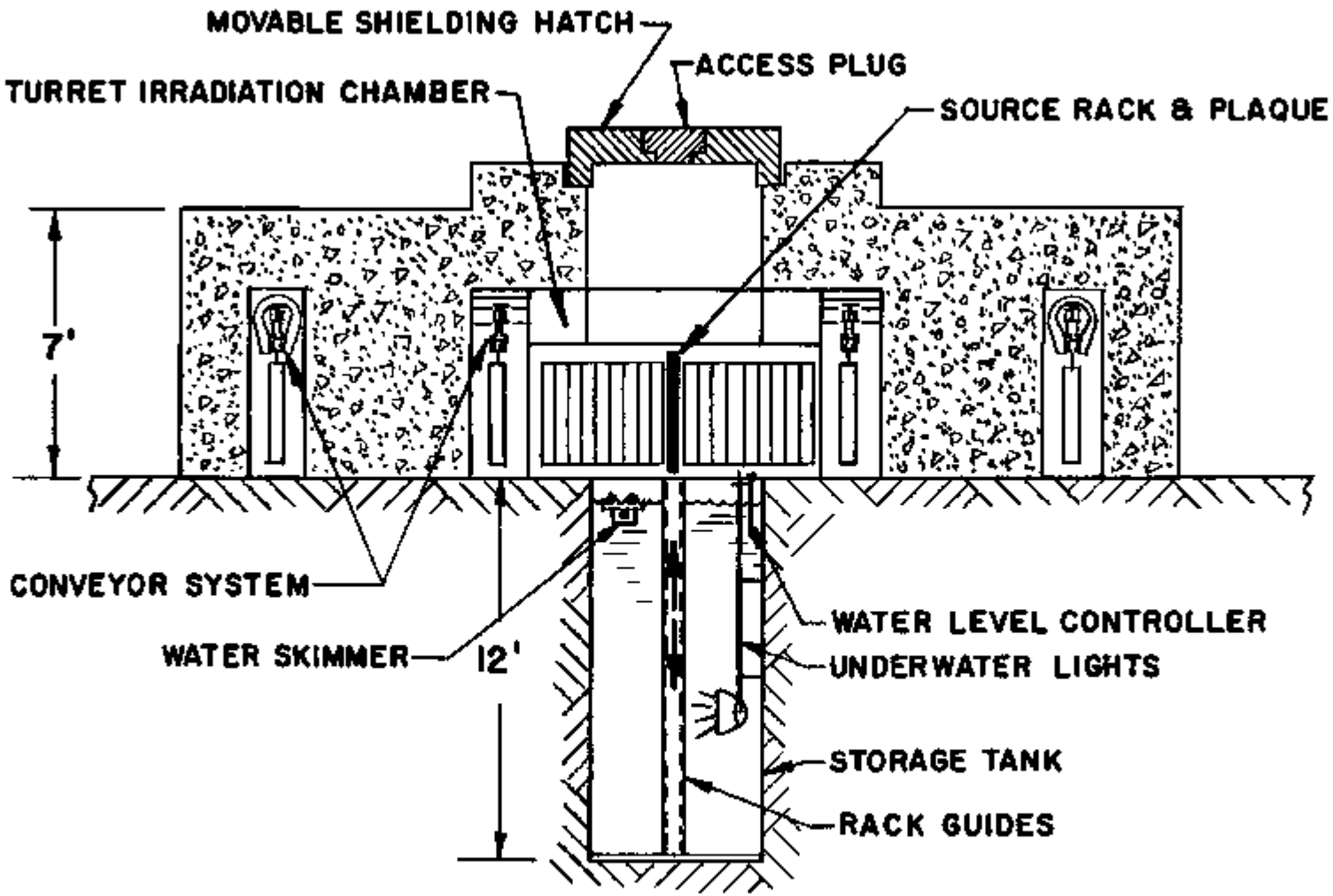

ELEVATION

FIG.5

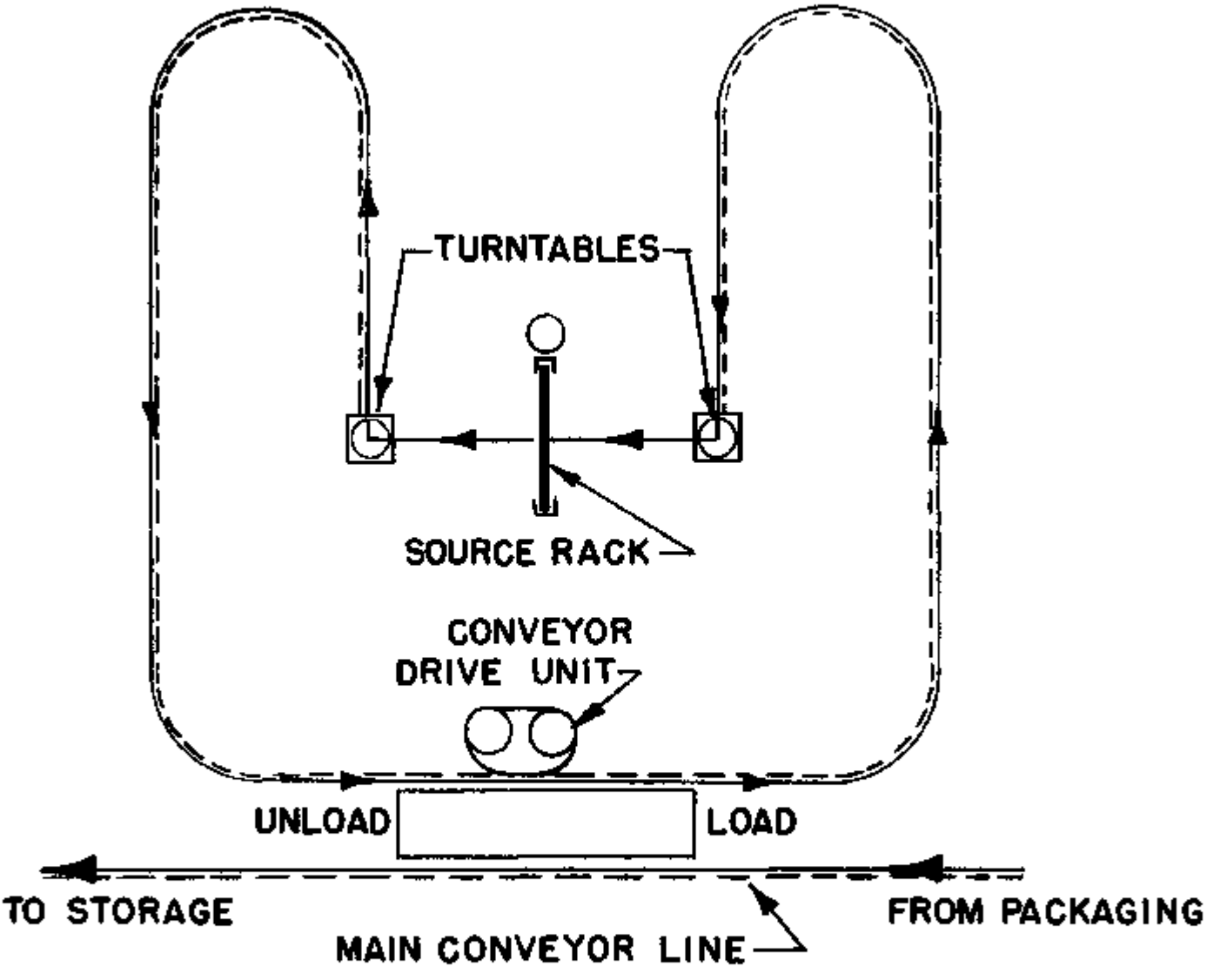

CONVEYOR SYSTEM DIAGRAM

FIG. 6

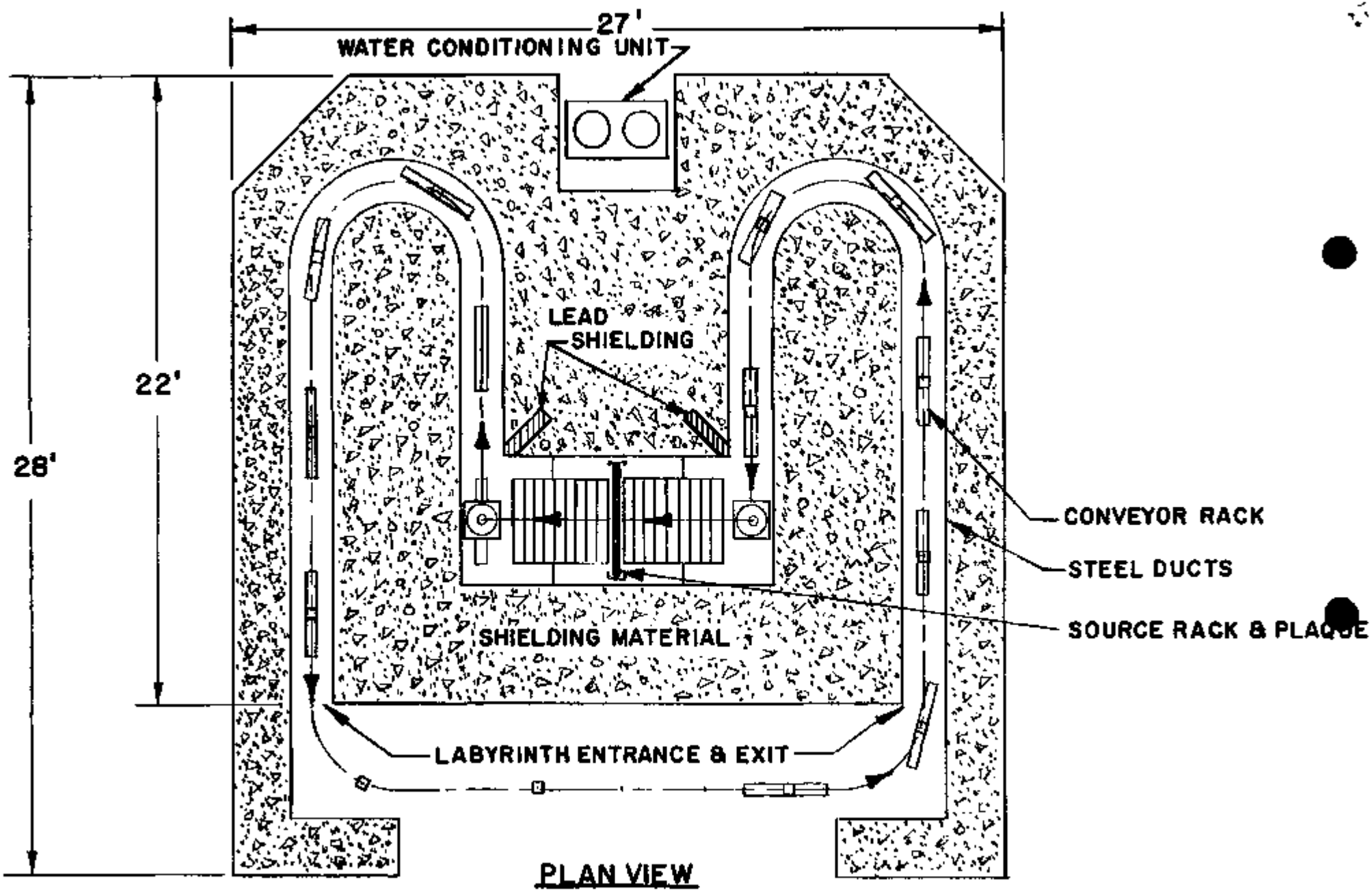

PLAN VIEW

FIG. 7

SOLID ROD SOURCE

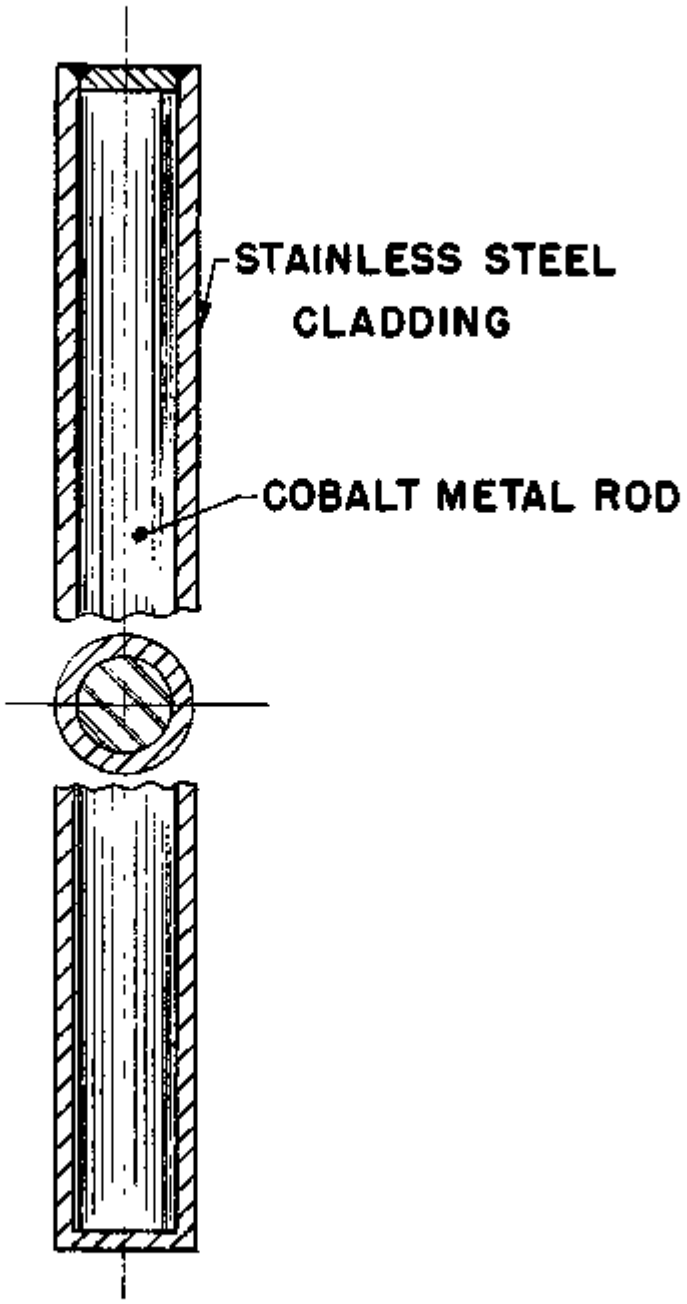

FIG.8

HOLLOW TUBE SOURCE

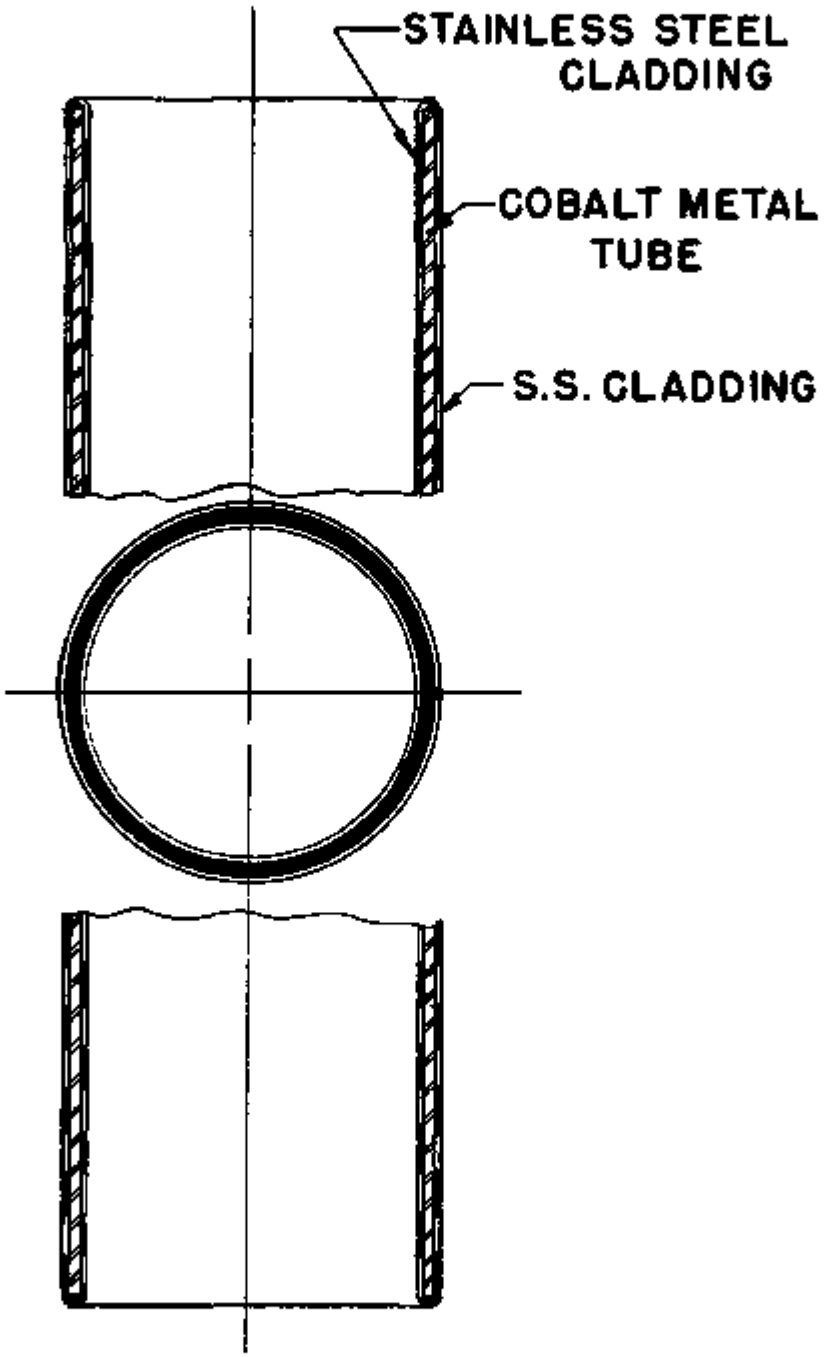

FIG. 9

RECTANGULAR STRIP SOURCE

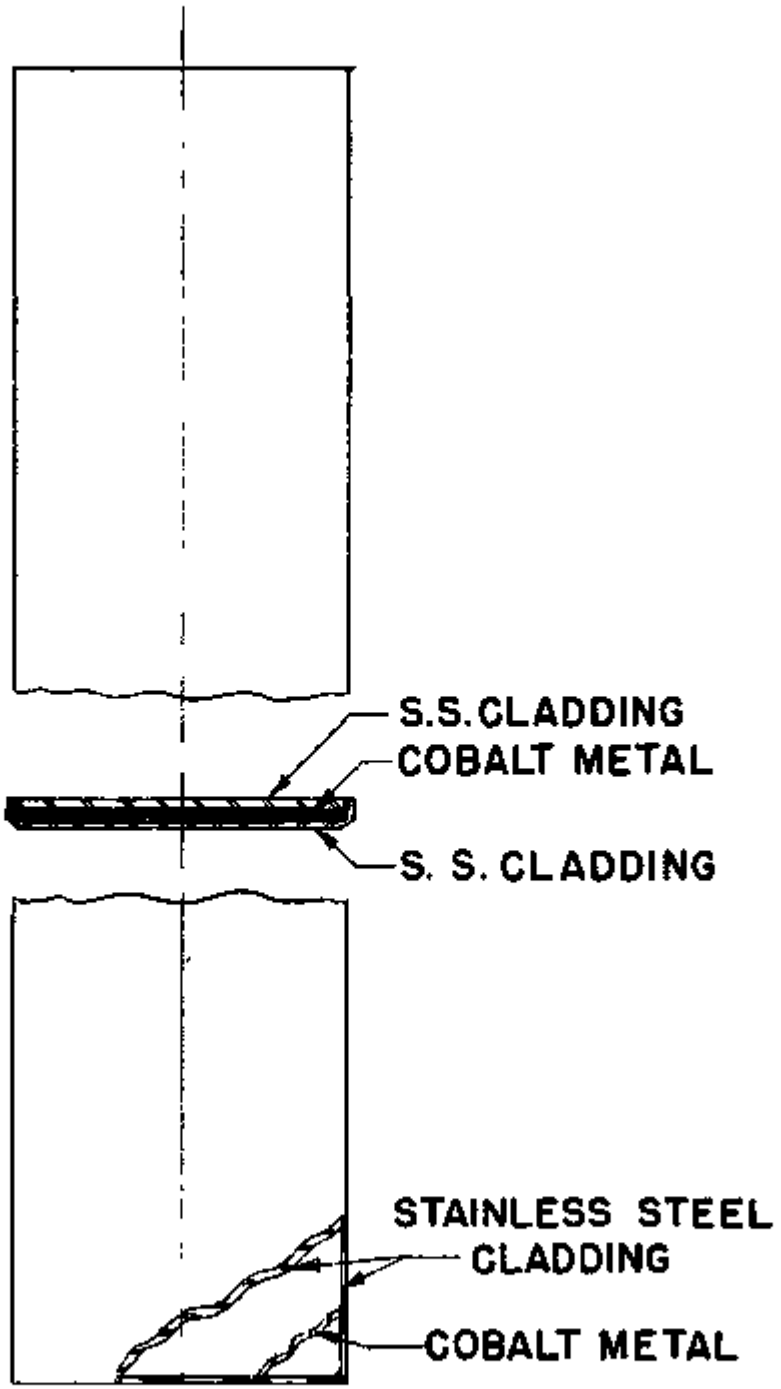

FIG. 10

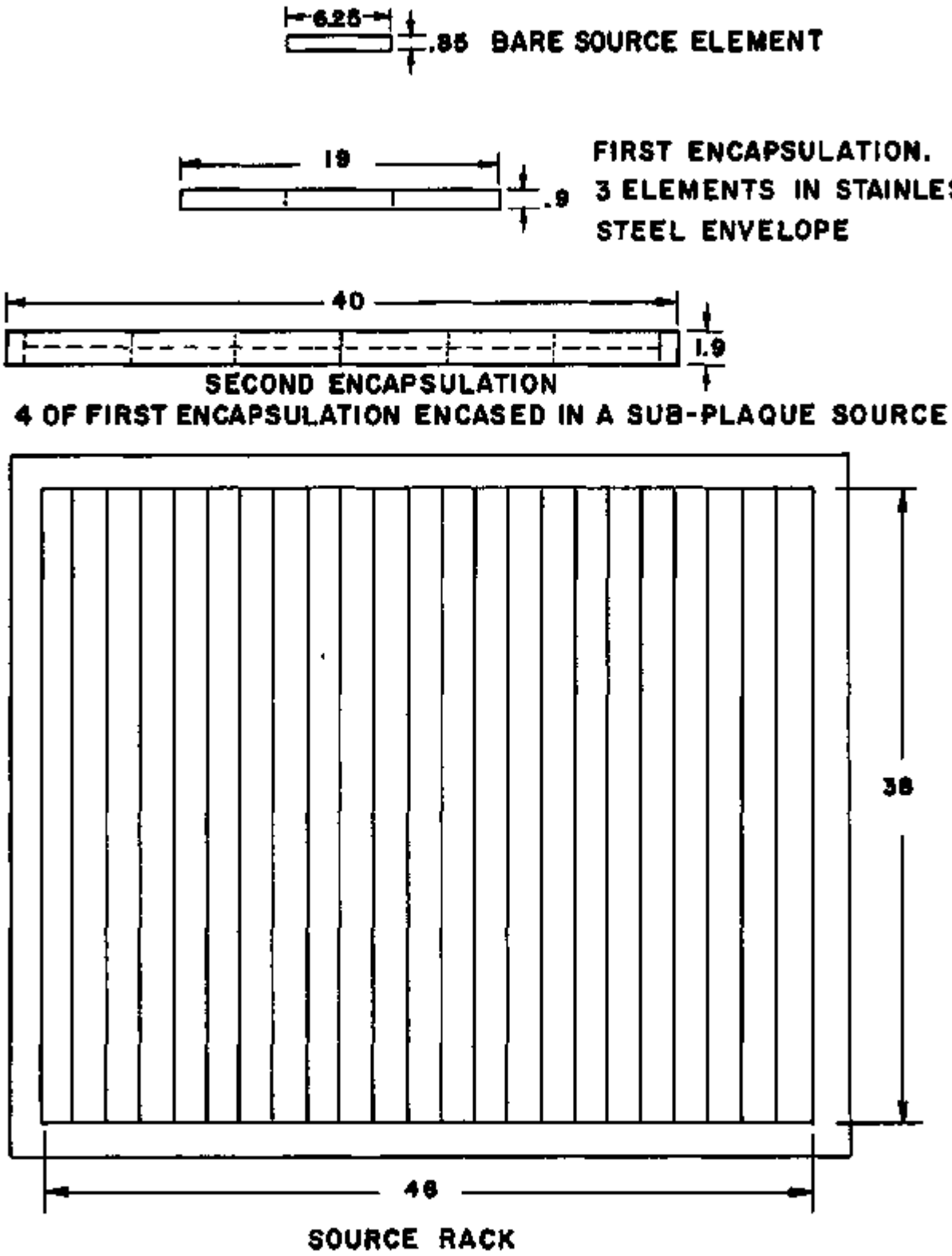
6.25
.85
BARE SOURCE ELEMENT
19
.9
FIRST ENCAPSULATION.
3 ELEMENTS IN STAINLESS
STEEL ENVELOPE
40
1.9
SECOND ENCAPSULATION
4 OF FIRST ENCAPSULATION ENCASED IN A SUB-PLAQUE SOURCE
38
46
SOURCE RACK

FIG.10

AEC

Materials-12-Food Irradiation Program

UNITED STATES
ATOMIC ENERGY COMMISSION
Washington 25, D. C.

No. D-35
Tel. HAzelwood 7-7831
Ext. 3446

FOR IMMEDIATE RELEASE
(Wednesday, February 8, 1961)

AEC ANNOUNCES SELECTION OF ARCHITECT-ENGINEER FOR ARMY RADIATION FACILITY

The Atomic Energy Commission is negotiating with Associated Nucleonics, Incorporated, to serve as architect-engineer in the design of a food irradiation facility at Natick, Massachusetts, for the U. S. Army Quartermaster Corps. Contract negotiations are underway with the Garden City, Long Island, firm, a subsidiary of Stone and Webster Engineering Corporation. Associated Nucleonics was one of 28 firms which submitted proposals in response to Commission invitation.

The facility, to be located at the Quartermaster Research and Engineering Center at Natick, is to be constructed under the direction of the Atomic Energy Commission with funds in the amount of $1.8 million to be provided by the Department of the Army. The contract will be administered by the Commission's New York Operations Office. The facility, designed specifically for use in connection with the Army's food irradiation program, will employ two radiation sources. These are a 1,000,000 curie, cobalt-60 source and a 24 Mev (million electron volts) linear accelerator. In addition to the irradiation of food, these sources could also be used for the irradiation of other items on an experimental basis.

This facility is the direct outgrowth of previous studies which have been made by the Army's Quartermaster Corps concerning the use of radiation for the preservation of food. Encouraging progress has been made in the Army's program on radiation sterilization of meats, such as pork, ham, chicken and beef,

(more)

17-8-C

for extended storage without refrigeration. Using the combined research facilities available at the QM Research and Engineering Center, further research into these areas will be conducted.

It is planned that the irradiation facility will be completed in late summer of 1962. It will be made available to other governmental agencies for food preservation studies in their areas of interest.

The Army program which is administered by the Quartermaster General concentrates on total sterilization to preserve food for long periods of time. This aspect of irradiated food is of greatest interest to the military.

The Atomic Energy Commission also conducts a program on radiation preservation of food. This is aimed at the radiation pasteurization of fruits and fishery products for extension of their refrigerated shelf life.

- 30 -

2861

Mat 12 - Food Irradiation

NW

AEC

UNITED STATES
ATOMIC ENERGY COMMISSION
Washington 25, D.C.

No. C-263
Tel. HAzelwood 7-7831
Ext. 3446

FOR IMMEDIATE RELEASE
(Wednesday, December 28, 1960)

AIBS GROUP ADVISES COMMISSION ON RADIATION PROCESSING OF FOOD

At the request of the Atomic Energy Commission, the American Institute of Biological Sciences has established a committee of scientists to consult with the Commission's Division of Biology and Medicine and Office of Isotopes Development on radiation processing of food.

The committee will consider and advise on certain technical phases of the Commission's program aimed at extending the refrigerated shelf-life of selected food products through low-dose radiation processing.

Members of the committee are Dr. Bernard S. Schweigert, Michigan State University, Chairman; Dr. S. A. Goldblith, Massachusetts Institute of Technology; Dr. Lloyd G. Kempe, University of Michigan; Dr. Norman F. Kraybill, National Institutes of Health; Dr. Merrill S. Read, National Dairy Council; and Dr. Roger J. Romani, University of California.

The committee, meeting several times a year, will advise the Commission's Office of Isotopes Development and the Division of Biology and Medicine on technical considerations involved in the processing of specific marine, fruit, and vegetable products. Particular emphasis will be placed on food technology, nutrition and wholesomeness studies.

- 30 -

122860

12-28-60

AEC

Material to -12. Fact

W

UNITED STATES
ATOMIC ENERGY COMMISSION
Washington 25, D. C.

No. C-249
Tel. HAzelwood 7-7831
Ext. 3446

FOR IMMEDIATE RELEASE
(Monday, December 12, 1960)

AEC AWARDS CONTRACT TO CONSUMERS UNION FOR DIETARY RADIOACTIVITY STUDY

The U. S. Atomic Energy Commission has awarded a research contract to Consumers Union, Mount Vernon, New York, for partial support of studies of radioactivity in sample diets prepared in 25 cities in 22 states. The AEC will provide $20,000 for the 1961 cooperative study which is a continuation of a 1959 survey made by Consumers Union independent of Government support. It will be directly related to dietary studies carried out by the AEC's Health and Safety Laboratory at New York.

The purpose of the study is to obtain further information on radioactivity in the total diet in the United States. In all of the cities, total diet samples will be analyzed for strontium-90 and naturally occurring calcium and radium-226. Among the 25 cities where total diets will be sampled will be New York City, Chicago and San Francisco where the Health and Safety Laboratory is currently analyzing individual food items for radioactivity. The Consumers Union study will also include, in these and possibly several other cities, analyses for man-made radioisotopes cesium-137, cerium-144, plutonium-239 and zinc-65 as well as the naturally occurring radioisotope lead-210. Chemical analyses will be made also for natural isotopes of potassium.

The AEC's program is one of research rather than monitoring foods and diets throughout the United States, and the results obtained from this research project may be useful in estimating regional dietary levels of radioactivity.

(more)

12-12-60

Copy filed MHS-3

The diet samples will consist of three prepared meals per day for a two-week period or a total of 42 meals and snacks of teenagers. In the three metropolitan areas (San Francisco, Chicago and New York), the study will also include diets of several age groups and economic levels. In all 25 cities, food will be purchased from local retail markets and prepared locally as for consumption. Then the meals will be packaged in special plastic containers and shipped to Consumers Union's consultant radiochemistry laboratories. In some areas separate samples of milk and whole-wheat products included in the total diet samples will be analyzed in order to estimate their contribution to the radioactivity of the diet.

The principal investigators for the contract will be Mr. Irving Michelson, Director of Public Service Projects of Consumers Union, and Dr. Cyril L. Comar, Director of the Laboratory of Radiation Biology of Cornell University and head of Cornell's Department of Physical Biology. The AEC's Health and Safety Laboratory in New York will assist in some technical phases of the study. The New York Operations Office will administer the contract.

The 25 cities included in the AEC-CU project are: Los Angeles and San Francisco, California; Boulder, Colorado; Washington, D.C.; Coral Gables, Florida; Atlanta, Georgia; Nampa, Idaho; Chicago, Illinois; Des Moines, Iowa; Louisville, Kentucky; New Orleans, Louisiana; Boston, Massachusetts; Duluth and St. Paul, Minnesota; St. Louis, Missouri; Bozeman, Montana; Albuquerque, New Mexico; New York, New York; Grand Forks, North Dakota; Stillwater, Oklahoma; Pittsburgh, Pennsylvania; Memphis, Tennessee; Austin, Texas; Hampton, Virginia; and Seattle, Washington.

- 30 -

121260

Mat-12-Food Irradiation Program

UNCLASSIFIED

July 6, 1960

AEC 719/33

COPY NO. 41

AEC 719/33

ATOMIC ENERGY COMMISSION

ARMY REVISED IRRADIATED FOOD PROGRAM

Note by the Secretary

The General Manager has requested that the attached letter to the Chairman, JCAE, from the Director of Research and Development, Department of the Army, be circulated for the information of the Commission.

W. B. McCool
Secretary

DISTRIBUTION	COPY NO.
Secretary	1
Commissioners	2 - 6
General Manager	7
Deputy Gen. Mgr.	8
Asst. Gen. Mgr.	9 - 10
Asst. Gen. Mgr. Mfg	11
Asst. Gen. Mgr. R&S	12
Asst. Gen. Mgr. R&ID	13
Asst. Gen. Mgr. Adm	14
Asst. to the GM	15
General Counsel	16 - 19
Biology & Medicine	20
Congr. Relations	21
Finance	22 - 24
Health & Safety	25
Isotope Development	26
Public Information	27
Office of Plans	28
Production	29 - 30
Reactor Development	31 - 36
Research	37
D. C. Office	38 - 40
Secretariat	41 - 45

UNCLASSIFIED

HEADQUARTERS
DEPARTMENT OF THE ARMY
OFFICE OF THE DIRECTOR OF RESEARCH AND DEVELOPMENT
WASHINGTON 25, D. C.

June 22, 1960

Honorable Clinton P. Anderson
Chairman
Joint Committee on Atomic Energy
Congress of the United States
Washington 25, D. C.

Dear Senator Anderson:

In reply to your letter of 3 June 1960 regarding the Army Revised Irradiated Food Program, the following information is furnished.

A decision has been reached to modify the original Varian Associates 24 MEV., pilot plant model, linear accelerator so as to produce a variable-energy electron source for research purposes per the following specifications:

a. Provide 18 kilowatts power, 0-24 MEV energy, 750 micro-amperes average beam current at 24 MEV;

b. Omit magnetic deflector and scanner;

c. Add a simple beam diffuser and a simple X-ray converter;

d. Simplify conveyer to absolute minimum necessary for research purposes.

An analysis leading to this decision was conducted by Office, Chief of Research and Development and resulted in a finding of the need for a 24 MEV linear accelerator rather than the 12 MEV device included in the Army revised irradiated food program submitted to your Committee at the 31 March 1960 hearings. As your Committee knows, the past history of the Army's irradiated food research has brought forth several fundamental unsolved research problems. My review of the results of the above mentioned analysis has convinced me that such a basic research tool is needed to support the fundamental research which is directed toward the solution of these problems. It is not the Army's plan to use this 24 MEV accelerator for irradiation of food to be fed to humans. It will be used solely as a basic research tool to assist in the solution of problems in the areas indicated below.

In the analysis leading to this decision, consideration was given to the economics involved and the equipment requirements for a research program on induced activity, dose-rate, dose-depth, enzyme and vitamin changes, food flavor retention versus sterilization and electron versus high-energy gamma irradiation. The specified average beam current is based on dose-rate and flavor retention versus bacteria kill research requirements; the specified maximum energy is based on dose-depth and induced activity research requirements. The determination that the completion of the Varian Associates' instrument was the most economical approach to supplying the optimum electron research source was derived from comparisons of the costs of three courses of action. These were the

possibilities of the modification of the original Varian pilot plant device to provide a research instrument; the salvaging of the pilot plant model and the designing and construction of a new instrument to research specifications; or the purchasing of an off-the-shelf accelerator.

A decision has not been made as to location of the site for the Food Irradiation Research facility. As Major General Calloway previously testified, The Quartermaster General did receive instructions to appoint a site survey board. A board was appointed and it is expected that the approved recommendations of The Quartermaster General will be forwarded to the Department of the Army within the near future. When review at the Department of the Army staff level is completed and a decision has been rendered concerning the site for the radiation research facility, your Committee will be informed prior to any public release of such information.

You may be interested to know that since the 31 March 1960 hearing of the Joint Committee on Atomic Energy, the Army Research Office has initiated an operations research study to determine the logistic, operational and economic advantages which would accrue to the Armed Forces through the introduction of foods treated by ionizing radiation into the military combat and peacetime ration. The study is to be conducted by the Operations Research Office, Johns Hopkins University, on a contract basis and is estimated to require approximately nine months to a year for completion. I have inclosed, for your information, the proposed scope and objectives of this study.

Sincerly,

/s/

Richard S. Morse
Director of Research and Development

1 Incl
Proposed Scope and
Objectives for
Operations Research
Study

PROPOSED SCOPE AND OBJECTIVES FOR OPERATIONS RESEARCH STUDY

Objective: To determine the operational, logistical, and economic advantages and disadvantages which would accrue to the Armed Forces through the introduction of foods treated by ionizing radiation into the military combat and peacetime ration.

Scope: This study will include but will not necessarily be limited to:

a. A critical analysis of current concepts for the integration of irradiated foods into the combat feeding system of the Armed Forces.

b. A determination of the present and future combat requirements from a tactical standpoint for irradiated foods. In this connection, both limited and general warfare situations should be considered. Combat requirements of the field army, battle group, STRAC and Marine Corps should be given special attention.

c. A consideration of the logistical implications involved in the peacetime and combat use of irradiated foods as components of the military ration (i.e., cost, manpower, transportation, storage, preparation, etc).

d. A comprehensive analysis of the economic implications involved in effecting a transition to industry of production of irradiated foods, provision of an adequate mobilization base, and the impact on strategic storage concepts.

e. A comparative analysis of the logistical, operational and economic advantages and disadvantages to the military of irradiated foods as ration components versus freeze-dehydrated, dehydrated, frozen and heat-processed foods.

f. A determination of the relative urgency of the operational requirement for irradiated foods as compared to the operational requirements for improved weaponry, individual and group protection, transportation, other improved foods, communications, medical care, etc.

g. Consideration of the current technical "state-of-the-art" and technical potential for meeting the time frame objective set forth in reference b. (1965-1975)

h. Consideration of the R&D investment in funds to date and probable future expenditures required to achieve program objectives as compared to the magnitude and significance of pay-off for the Armed Forces expressed in terms of logistic, operational and economic requirements or improvements, morale, efficiency or other benefits.

i. Recommendations.