MATERIALS 7 ANALYSIS & TESTS

See O-M-7. Standards Comtee.

Materials 7 Analysis & Tests

	Date	To	From	Class.	Fgn.	No.	To	From	Class
1	7-19-62	AEC 920/6	vee						
2	12-11-64	Nuclear Instrument Modules, Committee on Instrumentation Systems	vee						
3	11-13-64	Nuclear Chicago Corp Nuclear Instrumentation	vee						
4	9-8-65	Radiation Chemestry Data Notre Dame	et						

SEP 7 1965

MEMORANDUM FOR CHAIRMAN SEABORG
COMMISSIONER PALMER
COMMISSIONER RAMEY
COMMISSIONER VAN

SUBJECT: ANNOUNCEMENT OF RADIATION CHEMISTRY DATA CENTER

Attached for your information is a public announcement on the establishment of a Radiation Chemistry Data Center at the University of Notre Dame. The announcement has the approval of the General Manager.

A similar announcement was called by airtube from Notre Dame today forms September 8. In view of this, we plan to issue our announcement tomorrow.

(Signed) Philippe E. Jacquet
for

Duncan C. Clark, Director
Division of Public Information

Attachment

cc: R. E. Hollingsworth, General Manager
J. J. Burke, Dir., DCR
H. O. Pruna, AGMA
R. E. Bauman, NTE
J. G. English, AGMRAD
A. Van Dyhse, X
F. L. Ingram, GC
Priscilla Keelan, MS
William Sartor, Notre Dame
W. B. McCool, Secretary

MAY 13 1965

Dear Craig:

Thank you for your letter of April 28, 1965, regarding standard instrument modules. This is a subject of considerable interest to us and we welcome the views of members of the Nuclear Instruments Industry and others who have an interest in the matter.

Representatives of the National Laboratories have recently agreed to a limited standardization in designing nuclear instrument modules. This action was considered necessary to relieve difficulties they were having because instrumentation systems designed at different laboratories were incompatible electrically and mechanically. Incompatibility was due almost entirely to arbitrary choices of many parameter values and physical details which are amenable to standardization. Standards that had been developed in past years for vacuum tube electronics systems were not suitable for modern systems based on solid state devices. Consequently the necessary design decisions have been made by individual designers and, since many values can be fixed arbitrarily, we find that numerous excellent but incompatible systems have emerged. Too frequently investigators at one laboratory cannot utilize an advanced subassembly design originating elsewhere without redesigning it to fit local systems. Similar problems are faced by workers who want to perform experiments away from their home laboratories.

The standardization agreements resulting from three working sessions held in March, April and May 1964 are described in U. S. Atomic Energy Commission Report TID 20893. Two copies of this short report are enclosed.

The planning stages of the standardizing effort involves primarily an assessment of the needs of the Laboratories. Subsequently, however, Committee members were encouraged to discuss the work of the Committee fruely with industrial representatives and, in fact, many manufacturers have had mutually beneficial discussions at the Laboratories. It was also considered important that the entire industry should be made uniformly aware of the Committee's work as

5-13-65

rapidly as practicable, and the Committee has made every effort to accomplish this through prompt publication of the results.

A Standard Nuclear Instrument Modules Mailing List has since been assembled which includes individuals and organizations that have shown an interest by requesting reports, drawings or other information. A copy of the most recently used list is enclosed. Since this list is the most complete source we have of parties who have indicated interest, it is used to distribute information, including notification about items that the Committee intends to consider and to invite suggestions and proposals concerning these items. A copy of the only such notice that has been distributed at this time is also enclosed.

Since it is evident that Nuclear Supplies, Inc. is not on this list, their name has been added.

Module standardization activities of the Committee have been directed solely toward facilitating interchangeability among the Laboratories and great care has been taken to defer or reject consideration of items not now bearing directly on interchangeability.

We believe the means that have been developed to inform all interested parties and organizations and to solicit their views are working very well. Omissions in our mailing list are not intentional and the list is constantly being revised.

We appreciate receiving your letter and will be happy to furnish any further information that is desired.

bcc: Cong. Rel. (2)
Secretariat (2)
AC/MED
GC
BPIB, DBM
BMA

Cordially,

(Sgd) Glenn T. Seaborg

Chairman

Honorable Craig Hosmer
House of Representatives

Enclosures:
1. TID Report 20893
2. Mailing List
3. Notice

Sent in envelope behind ltr.

RECEIVED

UNITED STATES
ATOMIC ENERGY COMMISSION
WASHINGTON, D.C. 20545

Materials - 7

No. IN-615
Tel. 973-3335 or
973-3446

FOR IMMEDIATE RELEASE
(Wednesday, September 8, 1965)

RADIATION CHEMISTRY DATA CENTER ESTABLISHED AT THE UNIVERSITY OF NOTRE DAME

A Radiation Chemistry Data Center has been established at the University of Notre Dame's Radiation Laboratory to compile and evaluate data on chemical reactions brought about by ionizing radiation--for example, alpha, beta and gamma radiation.

Sponsored jointly by the Atomic Energy Commission and the National Bureau of Standards, the center at Notre Dame, Indiana, will serve as an international focal point for the collection, storage, evaluation and dissemination of radiation chemistry data. All information will be evaluated by scientists actively working in the field of radiation chemistry throughout the world.

Initially, the center's activities will be concerned with the compilation, critical evaluation and interpretation of available data relating to reactions induced by ionizing radiation. Types of data which will be compiled include chemical reaction yields (for example, in aqueous solutions, hydrocarbon solutions, and crystalline solids), effects on physical properties, and specific rates of elementary processes.

As a component of the National Standard Reference Data System, this new information center will contribute to the systematic data-compiling activities in the United States. The National Standard Reference Data System was established by the President's Office of Science and Technology in 1963 to coordinate data-compiling activities under Government sponsorship. The National Bureau of Standards administers the program.

The center will be under the direction of Professor Milton Burton, Director of Notre Dame's Radiation Laboratory,

(more)

and will be located in the radiation research building which was erected on the Notre Dame campus by the Atomic Energy Commission in 1963. Inquiries may be addressed to the Radiation Chemistry Data Center, Radiation Laboratory, University of Notre Dame, Notre Dame, Indiana.

#

9/8/65

STANDARD NUCLEAR INSTRUMENT MODULES
MAILING LIST

AMP Incorporated
Federal Industries Division
P. O. Box 3608
Harrisburg, Pennsylvania
ATTN: Mr. William J. Bonde
Assistant Market Manager

AMP Incorporated
Federal Industries Division
P. O. Box 3608
Harrisburg, Pennsylvania
ATTN: Mr. William H. Hildebrand
Market Manager

Argonaut Associates, Inc.
P. O. Box K
Beaverton, Oregon
ATTN: Mr. Cullen H. Macpherson
President

Argonne National Laboratory
Argonne, Illinois 60440
ATTN: Mr. G. D. Ansley

Argonne National Laboratory
Argonne, Illinois 60440
ATTN: Mr. J. Gilroy

Argonne National Laboratory
Argonne, Illinois 60440
ATTN: Mr. T. W. Hoffer

Argonne National Laboratory
Argonne, Illinois 60440
ATTN: Mr. S. J. Rudnick

Argonne National Laboratory
Argonne, Illinois 60440
ATTN: Mr. M. G. Strauss

Argonne National Laboratory
Argonne, Illinois 60440
ATTN: Mr. A. Winters

Argonne National Laboratory
Idaho Facilities
Idaho Falls, Idaho
ATTN: Miss Sharon Green
Library

University of Arizona
College of Liberal Arts
Department of Physics
Tucson, Arizona 85721
ATTN: Mr. L. B. Mortara

Atomic Energy Commission
Division of Biology and Medicine
Washington, D. C. 20545
ATTN: Mr. R. L. Darneal

Atomic Energy Commission
Division of Biology and Medicine
Washington, D. C. 20545
ATTN: Mr. H. R. Wasson

USAEC-HASL
376 Hudson Street
New York 14, New York
ATTN: Mr. R. T. Graveson

USAEC-HASL
376 Hudson Street
New York 14, New York
ATTN: Mr. N. Latner

Atomic Energy Commission
Division of Technical Information Extension
P. O. Box 62
Oak Ridge, Tennessee 37831
ATTN: Mr. B. D. Donald

Aerojet-General Nucleonics
P. O. Box 78
San Ramon, California
ATTN: Document Custodian

Atomic Development and Machine Corporation
15-04 150th Street
College Point 56, New Jersey
ATTN: Mr. Pat Miola

Argonne National Laboratory
Argonne, Illinois 60440
ATTN: Mr. S. G. Buccino
Reactor Physics Division

Baird-Atomic, Inc.
33 University Road
Cambridge 38, Massachusetts
ATTN: Miss F. A. Greene
Librarian

Baldwin-Lima-Hamilton Electronics Corporation
1700 Cloverfield Boulevard
Santa Monica, California
ATTN: Mr. L. C. Hollands

Borders Electronics Company, Inc.
Route 156 and Bethel Avenue
P. O. Box B
Pennsauken, New Jersey
ATTN: Mr. E. J. Guilfoy

Boron Machine and Welding Company
Route 2
Offutt Road
Clinton, Tennessee
ATTN: Mr. Albert W. Lynch

Brookhaven National Laboratory
University of Washington Group
Upton, Long Island, New York 11973
ATTN: Mr. Howard F. Davis

Brookhaven National Laboratory
Upton, Long Island, New York 11973
ATTN: Mr. W. A. Higinbotham

Brookhaven National Laboratory
Upton, Long Island, New York 11973
ATTN: Mr. S. Rankowitz

Brookhaven National Laboratory
Upton, Long Island, New York 11973
ATTN: Mr. L. H. Redmond

Barcon, Inc.
1172 Forgewood Avenue
Sunnyvale, California
ATTN: Mr. James P. Campbell
Research Director

Contemporary Science, Inc.
P. O. Box 765
Mount Prospect, Illinois 60058
ATTN: Mr. James T. Johnson

University of California at Los Angeles
Physics Department
Los Angeles, California
ATTN: Professor Roy Haddock

California Institute of Technology
Jet Propulsion Laboratory
4800 Oak Grove Drive
Pasadena, California 91103
ATTN: Mr. Eldon L. Haines

Charter Laboratories
61 Jefferson Avenue
Northport, Long Island, New York 11768
ATTN: Mr. W. A. Lindgren
Director of Engineering

Chronetics
965 Nepperhan Avenue
Yonkers, New York
ATTN: Dr. Robert Sugarman

Columbia University
Pegram Nuclear Physics Laboratory
New York, New York 10027
ATTN: Mr. Vahe Guiragossian

Columbia University
Pegram Nuclear Physics Laboratory
New York, New York 10027
ATTN: Mr. J. Hahn

Consolidated Avionics Corporation
800 Shames Drive
Westbury, New York
ATTN: Mr. Herbert V. Joyce
Sales Coordinator

Cooper-Trent, Inc.
Wilson Boulevard at Danville Street
Arlington, Virginia 22210
ATTN: Mr. Roy E. Comer, Jr.
Marketing Specialist

Cosmic Radiation Laboratories, Inc.
1045 Montauk Highway
Bellport, Long Island, New York
ATTN: Mr. Edward J. Downs
President

Curtiss-Wright Corporation
Electronics Division
95 Market Street
East Paterson, New Jersey
ATTN: Mr. V. F. McCarten

Data Technology Corporation
Box 10935
Palo Alto, California 94303
ATTN: Mr. James Sutherland

Edgerton, Germeshausen and Grier, Inc.
160 Brookline Avenue
Boston 15, Massachusetts
ATTN: Mr. M. Henebry
Department R. H.

Edgerton, Germeshausen and Grier, Inc.
95 Congress Street
Salem, Massachusetts 01970

Edgerton, Germeshausen and Grier, Inc.
95 Congress Street
Salem, Massachusetts 01970
ATTN: Dr. A. Rascel

Electro Instrument Repair
1600 West 14 Mile Road
Clawson, Michigan
ATTN: Mr. Anthony R. Satullo

Eon Corporation
175 Pearl Street
Brooklyn, New York
ATTN: Mr. Nat Paris

Florida State University
Department of Chemistry
Tallahassee, Florida 32306
ATTN: Mr. Mike Bennett

General Applied Science Laboratories, Inc.
Merrick and Stewart Avenues
Westbury, Long Island, New York
ATTN: Mr. James T. Hedge

General Electric Company
Hanford Atomic Products Operation
Hanford Laboratories
Richland, Washington
ATTN: Mr. W. G. Spear

General Electric Company
Knolls Atomic Power Laboratory
Schenectady, New York 12301
ATTN: Mr. O. W. Bilharz
Building F

General Nuclear Corporation
538 East Central Park Avenue
Anaheim, California
ATTN: Mr. Hugh M. Griffin
President

Goddard Space Flight Center
National Aeronautics and Space Administration
Washington, D. C. 20771
ATTN: Dr. George Ludwig

General Electric Company
Atomic Power Equipment Department
P. O. Box 1131
San Jose, California
ATTN: Miss Aileen Thompson

Hamner Electronics Company, Inc.
P. O. Box 531
Princeton, New Jersey 08540
ATTN: Dr. J. S. Hill

Hamner Electronics Company, Inc.
P. O. Box 531
Princeton, New Jersey 08540
ATTN: Mr. Morris Chazin

Hamner Electronics Company, Inc.
P. O. Box 531
Princeton, New Jersey 08540
ATTN: Mr. Edward A. DeCrosta
Operations Manager

Hamner Electronics Company, Inc.
P. O. Box 531
Princeton, New Jersey 08540
ATTN: Mr. D. R. Furman

Harshaw Chemical Company
1945 East 97th Street
Cleveland, Ohio
ATTN: Mr. W. W. Managan
Crystal-Solid State Division

Hewlett Packard Company
1501 Page Mill Road
Palo Alto, California
ATTN: Mr. James Campbell

Hewlett Packard Company
1501 Page Mill Road
Palo Alto, California
ATTN: Mr. Jeff Wolfington

HW Electronics, Inc.
14 Huron Drive
Natick, Massachusetts
ATTN: Mr. R. H. Leeman
Sales Manager

HW Electronics, Inc.
14 Huron Drive
Natick, Massachusetts
ATTN: Mr. D. M. Trotsky
Vice President

Harrison Laboratories
160 Locust Avenue
Berkeley Heights, New Jersey
ATTN: Mr. A. M. Darby
Sales Manager

Hewlett Packard Company
[illegible] Rollins Avenue
Rockville, Maryland
ATTN: Mr. R. J. Coan

Hamner Electronics Company, Inc.
462 Churchill Road
McLean, Virginia
ATTN: Mr. William B. Todd

IBM Corporation
Laboratory Library - Department 653
Box 390 CPO
Kingston, New York 12401
ATTN: Mr. Edward K. Parker
Manager

University of Illinois
Department of Physics
Urbana, Illinois 61803
ATTN: Mr. K. B. Keller

Instrument and Development Products Company
555 W. 109th Place
Chicago 28, Illinois

Instrument and Development Products Company
555 W. 109th Place
Chicago 28, Illinois
ATTN: Mr. Charles E. Soderquist

INSUL-8 Corporation
P. O. Box 697
San Carlos, California
ATTN: Mr. John Copeland

J-Omega Company
[illegible] Mora Drive
Mountain View, California 94041
ATTN: Mr. Edgar J. Buchs

Kepco, Inc.
131-38 Sanford Avenue
Flushing, New York 11352
ATTN: Mr. Paul Birman

Lambda Electronics Corporation
515 Broad Hollow Road
Melville, Long Island, New York
ATTN: Mr. R. H. Scholte
Sales Manager

Lawrence Radiation Laboratory
University of California
Berkeley, California 94720
ATTN: Mr. F. S. Goulding

Lawrence Radiation Laboratory
University of California
Berkeley, California 94720
ATTN: Mr. George Kilian

Lawrence Radiation Laboratory
University of California
Berkeley, California 94720
ATTN: Mr. A. E. Larsh, Jr.

Lawrence Radiation Laboratory
University of California
Berkeley, California 94720
ATTN: Mr. Dick A. Mack

Lawrence Radiation Laboratory
University of California
Livermore, California 94551
ATTN: Mr. F. C. Kaifer

Lawrence Radiation Laboratory
University of California
Livermore, California 94551
ATTN: Mr. A. Stripeka

Lawrence Radiation Laboratory
University of California
Livermore, California 94551
ATTN: Mr. C. A. Van Denkeuvel

Lawrence Radiation Laboratory
University of California
P. O. Box 808
Livermore, California 94551
ATTN: Technical Information Service

LeCroy Research Systems Corporation
8 Station Road
Irvington-on-Hudson, New York
ATTN: Mr. Porter

Los Alamos Scientific Laboratory
Los Alamos, New Mexico 87544
ATTN: Mr. N. A. Lindsay

Ludlum Measurements, Inc.
P. O. Box 517
1219 East Broadway
Sweetwater, Texas
ATTN: Mr. Donald G. Ludlum

Minnesota Mining and Manufacturing Co.
900 Hudson Road
St. Paul, Minnesota 55119
ATTN: Mr. Dean A. Godown

N-T Electronics Company
1000-A Dowelling Boulevard
San Leandro, California 94577
ATTN: Mr. B. Pat Moore

Nanosecond Systems, Inc.
176 Linwood Avenue
Fairfield, Connecticut
ATTN: Mr. Arthur F. Chace, Jr.
Executive Vice President

Nanosecond Systems, Inc.
176 Linwood Avenue
Fairfield, Connecticut
ATTN: Mr. Edward J. Snyder
Chief Engineer

Nanosecond Systems, Inc.
176 Linwood Avenue
Fairfield, Connecticut
ATTN: Dr. Albert Wheatstone

Naval Ordnance Laboratory
Washington, D. C. 20390
ATTN: Mr. Carl Chambre

Naval Research Laboratory
Washington, D. C. 20390
ATTN: Mr. W. H. May
Code 7771

Northwestern University
Evanston, Illinois 60201
ATTN: Mr. Kamal K. Seth
Associate Professor of Physics

Nuclear Data, Inc.
100 West Golf Road
P. O. Box 491
Palatine, Illinois 60067
ATTN: Mr. C. J. Walsh

Nuclear Data, Inc.
100 West Golf Road
P. O. Box 491
Palatine, Illinois 60067
ATTN: Mr. Carl Finger
Development Engineer

Nucleonic Corporation of America
196 Degraw Street
Brooklyn 31, New York
ATTN: Mr. Benjamin Schloss

Oak Ridge Technical Enterprises Corp.
P. O. Box C
Oak Ridge, Tennessee 37831
ATTN: Mr. Harold B. Carter

Oak Ridge National Laboratory
Oak Ridge, Tennessee 37831
ATTN: Mr. C. J. Borkowski

Oak Ridge National Laboratory
Oak Ridge, Tennessee 37831
ATTN: Dr. S. H. Hanauer

Oak Ridge National Laboratory
Oak Ridge, Tennessee 37831
ATTN: Mr. N. W. Hill

Oak Ridge National Laboratory
Oak Ridge, Tennessee 37831
ATTN: Mr. G. A. Holt

Oak Ridge National Laboratory
Oak Ridge, Tennessee 37831
ATTN: Althea Stooksbury
Building 5500

Oak Ridge Technical Enterprises Corp.
P. O. Box 189
Oak Ridge, Tennessee 37831

Oak Ridge Technical Enterprises Corp.
P. O. Box C
Oak Ridge, Tennessee 37831
ATTN: Mr. C. W. Williams

Oak Ridge Technical Enterprises Corp.
P. O. Box C
Oak Ridge, Tennessee 37831
ATTN: Mr. R. H. Dilworth

Victoreen Instrument Company
Tullamore Division
5857 West 95th Street
Oak Lawn, Illinois 60453
ATTN: Mr. Sanford Hanberg

Victoreen Instrument Company
Tullamore Division
5857 West 95th Street
Oak Lawn, Illinois 60453
ATTN: Mr. Andreas P. Zizos

University of Virginia
Electronics Laboratory
Department of Physics
LeCormack Road
Charlottesville, Virginia
ATTN: Mr. W. A. Stephens

Vidmar Corporation
77 Ortega Avenue
Mountain View, California 94041
ATTN: Mr. Theodore C. Anderson
Sales Manager

Westinghouse Electric Corporation
Plant Development
Control Systems
Box 355
Pittsburgh, Pennsylvania 15230
ATTN: Mr. J. W. Power

Whitcomb Associates
750 Deepdene Road
Baltimore 10, Maryland
ATTN: Mr. M. F. Whitcomb

Yale University
Linear Accelerator
91 Sachen Street
New Haven, Connecticut
ATTN: Mr. C. E. L. Gingell
Instrumentation Engineer

Dr. Branko Leskovar
Institut Ruder Boskovic
P. O. Box 171
Bijenicka Cesta 54
Zagreb
Y U G O S L A V I A

Mr. H. Bisby
Atomic Energy Research Establishment
Harwell, Didcot
Berks
E N G L A N D

Ohio State University
1302 Kinnear Road
Columbus, Ohio 43212
ATTN: Mr. Russell P. Sullivan
Research Associate

University of Oregon
Physics Department
Eugene, Oregon
ATTN: Professor Harlan W. Lefevre

Oak Ridge Technical Enterprises Corp.
P. O. Box C
Oak Ridge, Tennessee 37831
ATTN: Rusty Stevens

Philco Corporation
Blue Bell, Pennsylvania
ATTN: Mr. Elliot Rhian

Power Designs, Inc.
1700 Shames Drive
Westbury, New York
ATTN: Mr. D. Kohn

Power Designs, Inc.
1700 Shames Drive
Westbury, New York
ATTN: Mr. Herbert Roth

Princeton-Penn Accelerator
P. O. Box 600
Princeton, New Jersey
ATTN: Mr. Jack Riedel
Senior Technical Staff

Princeton University
Department of Physics
Princeton, New Jersey
ATTN: Professor C. T. Reynolds

Princeton University
Department of Physics
Princeton, New Jersey
ATTN: Professor Frank Shoemaker

Princeton University
Princeton-Penn Accelerator
P. O. Box 600
Princeton, New Jersey
ATTN: Mr. Thomas Drouge

Purdue University
Department of Chemistry
Lafayette, Indiana 47907
ATTN: Mr. E. D. Schmidlin

Raytector, Inc.
P. O. Box 4175
Jersey City 4, New Jersey
ATTN: Mr. Philip M. Lorio
Vice President

Radiation Instrument Development Laboratory
4501 West North Avenue
Melrose Park, Illinois 60160
ATTN: Mr. R. E. Forsley

Radiation Instrument Development Laboratory
4501 West North Avenue
Melrose Park, Illinois 60160
ATTN: Mr. Gene French
Western Regional Manager

Radiation Instrument Development Laboratory
4501 West North Avenue
Melrose Park, Illinois 60160
ATTN: Mr. R. A. Jagglund
Sales Manager

Riley Stoker Corporation
Metallurgical Division
Worcester 6, Massachusetts
ATTN: Mr. R. E. Hallstrom

University of Rochester
Department of Electrical Engineering
Laboratory for Nuclear Structure
River Campus Station
Rochester, New York 14627
ATTN: Mr. John B. S. Waugh

Sharp Laboratories Division
Beckman Instruments, Inc.
P. O. Box 2078
La Jolla, California 92038
ATTN: Mr. R. A. Sharp
President

Southeastern Sales Company
1235 Corporation Parkway
Winston-Salem, North Carolina
ATTN: Mr. Robert E. Lee, Jr.

Sorensen Unit of Raytheon
Richards Avenue
South Norwalk, Connecticut
ATTN: Mr. P. J. Greaney

Stanford Linear Accelerator Center
Stanford University
Stanford, California 94305
ATTN: Dr. Larry Johnston

Stanford Linear Accelerator Center
Stanford University
Stanford, California 94305
ATTN: Library

Stanford Linear Accelerator Center
Stanford University
Stanford, California 94305
ATTN: Dr. Ivan Lutz

Stanford Linear Accelerator Center
Stanford University
Stanford, California 94305
ATTN: Dr. G. Temes

Sturrup, Inc.
50 Silver Street
Middletown, Connecticut
ATTN: Mr. A. B. Sturrup

Septor Electronics
504 West Wayne Street
Wheeling, Illinois
ATTN: Mr. E. W. Karpinski

Technical Measurement Corporation
441 Washington Avenue
North Haven, Connecticut
ATTN: Mr. Donald S. Davidson

Technitron, Inc.
219 North 7th Street
St. Charles, Illinois 60174
ATTN: Mr. Harold Mackenzie
President

Tech-Systems, Inc.
55 Danbury Road
Wilton, Connecticut
ATTN: Mr. Howard Z. Lehrman

Tennelec Instrument Company
140 E. Division Road
Oak Ridge, Tennessee
ATTN: Mr. Edward Fairstein

Texas Nuclear Corporation
9101 Research Road
Highway 183
Austin, Texas

Tracerlab
1601 Travelo Road
Waltham 54, Massachusetts
ATTN: Mr. Peter Street
Product Manager

Transistor Devices, Inc.
Route No. 53
Mt. Tabor, New Jersey
ATTN: Mr. Richard Blake

Atomic Energy of Canada Limited
Chalk River, Ontario
C A N A D A
ATTN: Mr. V. H. Allen

Australian Atomic Energy Commission
General Physics
Sutherland, N. S. W.
A U S T R A L I A
ATTN: Mr. R. D. Ryan

CERN
European Organization for Nuclear Research
Geneva
S W I T Z E R L A N D
ATTN: Dr. I. Pizer

Mr. M. Doireau
Chef du Service d'Electronique Industrielle
Commissariat a l'Energie Atomique
Boite Postale No. 2
Gif-sur-Yvette (Seine-et-Oise)
F R A N C E

Mr. J. C. Duquesnoy
Commissariat a l'Energie Atomique
12 rue du Capitaine Scott
Paris 15
F R A N C E

Nuclear Enterprises, Ltd.
Instrument Division
590 Berry Street
Winnipeg 21,
C A N A D A
ATTN: Dr. W. B. Reid

Nuclear Enterprises, Ltd.
Sighthill
Edinburgh V
S C O T L A N D
ATTN: Mr. A. Mackenzie

Nuclear Enterprises (C. B.), Ltd.
Sighthill
Edinburgh 11
S C O T L A N D
ATTN: Mrs. D. S. Sharp

A. Pages, Directeur
President de la Commission d'Instrumentation Nucleaire Francaise
51 rue de l'Admiral Mouchez
Paris 15e
F R A N C E

Professor B. Rispoli
Director "Laboratorio Elettronica"
C.N.E.N. Centro Studi Nucleari
Casaccia S. P. Anguillarese
Km. 1, 5
Roma (S. Maria Galeria)
I T A L Y

Societe d'Applications Industrielles de la Physique
Bureaux et Laboratoire
58 Rue Gabriel-Crie
Malakoff (Seine)
F R A N C E

Mr. Ing. Luigi Terra, General Manager
Sello Societa Ellectronica Lombarda
Va Monofalcone 12
Milano
I T A L Y

Mr. R. Viguie
Commissariat a l'Energie Atomique
Centre d'Etudes Nucleaires de Saclay
Gif-sur-Yvette (Seine-et-Oise)
F R A N C E

Mr. J. Gilat
Chief Engineer
Elron Electronic Industries, Ltd.
88 Hagiborim Street
P. O. Box 5590
Haifa
I S R A E L

Mr. E. H. Cooke-Yarborough
Atomic Energy Research Establishment
Harwell, Didcot
Berks
E N G L A N D

Dr. N. Spronk
Zoological Laboratory
Free University
Kapenburgerstraat 176
Amsterdam, H O L L A N D

Mr. Hiroshi Ogata
Kyoto University
Department of Nuclear Science
Kyoto, J A P A N

A. v

U.S. DEPARTMENT OF COMMERCE

NATIONAL BUREAU OF STANDARDS

ADDRESS REPLY TO
NATIONAL BUREAU OF STANDARDS
WASHINGTON, D.C. 20234

March 8, 1965

IN YOUR REPLY
REFER TO FILE NO.
231.32

Notice Regarding
AEC Committee on Nuclear Instrument Modules

This notice is addressed to recipients of Report TID-20893 and drawings of the AEC Standard Nuclear Instrument Modules in order to transmit the March 8, 1965, Addendum and to advise interested parties that the Committee is currently considering the following items:

(a) Connectors for interconnection of modules and preamplifiers

(b) Module connectors for data processing

(c) Connector to supply a.c. power to modules (connector currently specified is being reconsidered)

The Committee welcomes suggestions and proposals from interested parties and invites such individuals to discuss their suggestions with any of the Committee members. It is anticipated that decisions regarding items (a), (b) and (c) listed above will be made about April 15.

Drawings of the jigs used at the Lawrence Radiation Laboratory for checking bins and modules can be obtained by writing to D. A. Mack, Lawrence Radiation Laboratory, University of California, Berkeley, California 94720.

Sincerely yours,

L. Costrell

Louis Costrell, Chairman
AEC Committee on Nuclear Instrument Modules

Enclosure:

AEC Committee on Nuclear Instrument Modules Addendum (March 8, 1965) to Report on Standard Nuclear Instrument Modules, TID-20893, July 1964

March 8, 1965

AEC COMMITTEE ON NUCLEAR INSTRUMENT MODULES

Addendum to
Report on Standard Nuclear Instrument Modules
TID-20893 July 1964

After Page 5, add:

PREFERRED PRACTICE

The following constitute preferred practice:

1. Preferred Power Supply/Bin Interface Connectors

   AMP #206650
   AMP #206651

   (pin assignments will be made in the near future)

2. Preferred Analog Voltage Levels (for bandwidths of less than 10 megacycles)

   Class I: 0 to +1 Volt
   Class II: 0 to +10 Volts
   Class III: 0 to +100 Volts

3. Preferred Data Transmission Logic Levels for d.c. to 1 MC

	Output* (must deliver)	Input* (must respond to)
Logic "1"	+4 to +12V	+3 to +12V
Logic "0"	+1 to -2V	+1½ to -2V

*Voltages listed include noise

4. Preferred Fast Logic Levels and Characteristics

Reference level:	Ground
Impedance level:	50 ohms
Direction of signal:	Negative with respect to ground
Minimum input current level:	12 ma (when terminated at one end)
Coupling:	d.c.
Slow gates:	As for "Preferred Data Transmission Logic Levels for d.c. to 1 MC"

USCOMM-NBS-DC

Standard Nuclear Instrument Modules

Adopted by

AEC COMMITTEE

on

NUCLEAR INSTRUMENT MODULES

JULY 1964

prepared by

Louis Costrell
National Bureau of Standards

UNITED STATES
ATOMIC ENERGY
COMMISSION

Washington, D.C.-20545

Printed in USA. Price $0.50. Available from the Office of Technical Services, Department of Commerce, Washington, D. C. 20230

October 15, 1964

ADDENDUM TO

TID-20893

STANDARD NUCLEAR INSTRUMENT MODULES

Page 6, Table I

Users are cautioned to ascertain that they are working with the latest revisions of all drawings.

Page 5 (bottom)

PRACTICAL DESIGNS

Report UCRL-11702 represents one practical implementation of the standard module system and is available from:

Technical Information Division
Lawrence Radiation Laboratory
University of California
Berkeley, California 94720

USCOMM-NBS-DC

TABLE OF CONTENTS

INTRODUCTION 1

MODULE 2

BINS 3

PROVISION FOR POWER SUPPLIES 3

POWER REQUIREMENTS FOR STANDARD MODULES 4

GENERAL PURPOSE BIN POWER SUPPLY 5

QUALITY SHIELDING REQUIREMENTS (OPTIONAL) 5

SUGGESTIONS 5

DRAWINGS 5

DRAWING LIST - TABLE I 6

POWER SUPPLY SPECIFICATION - APPENDIX A 7

BLOCK DIAGRAM AND LEAD INFORMATION - FIGURE 1 10

MEMBERSHIP AEC COMMITTEE ON NUCLEAR INSTRUMENT MODULES - APPENDIX B . 11

ORGANIZING AD HOC COMMITTEE MEMBERSHIP - APPENDIX C 12

Standard Nuclear Instrument Modules

Adopted by

AEC Committee on Nuclear Instrument Modules

INTRODUCTION

The standard modules described herein were developed and adopted by the AEC Committee on Nuclear Instrument Modules (Appendix B). This Committee was established at a meeting of National Laboratory representatives held in Washington, D. C., on February 26, 1964 (Appendix C). The AEC Committee on Nuclear Instrument Modules held its first meeting on March 17, 1964, in Chicago and held additional meetings on April 22 and May 27.

The objective of the Committee was to produce a standard module design such that modules would be interchangeable physically and electrically. The electrical interchangeability is confined to the supply of power to the modules and does not concern circuit design. Materials and methods of construction have purposely been omitted. Depending upon the usage, parts made of sheet metal, extrusions or die castings may be applicable. The tolerances are specified to assure complete interchangeability among modules and bins of various types of construction. The module design has been approached from this viewpoint.

In order to achieve the objective it has been necessary to consider several interface problems such as the mating of the modules and bins and the mating of the bins and the power supplies. It has also been necessary to consider connectors and power supply voltages. Thus the module standardization has necessitated some degree of standardization of the bins and the power supplies.

In addition to presenting the specification requirements, this report includes also comments, drawings, etc., concerned with the practical implementation of the requirements. Such comment and drawings are included for clarification and assistance and are not restrictive.

This report presents the decisions reached by the Committee and has been reviewed by several members of the Committee to assure conformance with the decisions.

MODULE

General

The standard module has a basic width such that a standard bin will accommodate 12 single-width modules, 6 double-width modules, 6 single- and 3 double-width modules, etc. There are two standard module heights, the nominal 5 1/4" and the nominal 8 3/4". The modules slide into bins which in turn are intended to mount in EIA standard 19" racks. A module panel adapter is available to permit use of 5 1/4" modules in 8 3/4" bins.

Specific Requirements

1. The standard modules shall conform to the specification drawings listed in Table I.

2. Standard Voltages. The power supply voltages used by the modules have been standardized at plus 12, minus 12, plus 24 and minus 24 volts. Modules should, in general, confine their requirements to these voltages. It is recognized that on occasion voltages other than standard may be required. For this reason preferred non-standard voltages of ±3 and ±6 are designated.

3. Power connector wiring shall be as shown on Drawing NC-514. Unless otherwise specified, only the pins actually used in the module need be supplied in the module power connector block. It will be noted that a set of pins has been set aside for 115V AC. Since in some instances AC buses in the bins cannot be tolerated, the AC where required in specific modules, may alternatively be brought to the modules through a special connector located at the rear of the module in the area indicated on the drawings as reserved for external connectors. This connector shall be of the small flange AN3102A-10SL-3P type such as Amphenol Number 97-3102A-10SL-3P-115(639) or equal.

4. Ventilation

   The module shall permit vertical air flow and, for this purpose, shall provide an open area of not less than X% of the total horizontal projection of the module where X is equal to $\frac{2.5}{D}$ and D is the diameter in inches of the air flow holes. In no case shall X be less than 10%. Holes of less than 7/64" diameter are not considered in determining the area provided.

5. Signal connectors shall be of the 50 ohm BNC type with actu impedances of 50 ± 0.5 ohms. These connectors may be mounted on the front and/or rear of the modules. The drawings indicate the area on the rear of the modules that is available for mounting of the connectors.

BINS

General

The bins mount in standard EIA 19" racks and accommodate standard modules as indicated in the module description above.

Specific Requirements

1. The bins shall accommodate the standard modules and shall be in accordance with the specification drawings listed in Table I.

2. Each bin shall include 12 sets of guides so as to accommoda up to 12 standard modules.

3. Each bin shall include 12 power connectors so as to accommodate up to 12 standard modules. The power connector shall be wired as shown on Drawing NC-514. The following shall also apply to the power connectors, pins and wiring:

   (a) All pins designated as follows shall be bussed to all 12 connectors:

   +12V
   -12V
   +24V
   -24V
   Cln Gnd (Clean Ground)
   Dirty Gnd

   (b) The coaxial contacts and pins designated Carry #1, Carry #2, and Res (Reserved) shall not be bussed.

   (c) Unless otherwise specified, pins and coaxial contacts not bussed need not be supplied.

   (d) Reserved pins and reserved buses are for future assignment by the Committee and shall not be used until such assignments are made.

   (e) Connections to all pins in the power connector blocks should be flexible. Therefore if stiff buses are used, connections between the buses and the connector pins shall be such as to permit the pins to "float."

PROVISION FOR POWER SUPPLIES

Power to the bin connector blocks may be supplied from any of the following:

External power supplies. Such power supplies might, for exampl provide power to a large number of bins assembled in a rack.

Bin mounted power supplies that provide power to all of the modules in the bin on which the supply is mounted.

Comment: Drawing ND-515 shows a typical power supply package. Drawing ND-516 shows a typical extender for use with this package for providing additional wiring space.

Supplies built into standard modules.

POWER REQUIREMENTS FOR STANDARD MODULES

Standard modules should operate correctly when supplied with with power in accordance with the following specifications:

1. Voltages

   +12.00, -12.00, +24.00 and -24.00 volts (see Module, Specifi Requirements, Standard Voltages).

2. Ground Return

   The common ground return terminal shall also be chassis ground.

3. Voltage Tolerance

   The tolerance on the voltages shall be ±1/2% of the nominal vlaues.

4. Regulation

   The voltage shall not vary by more than ±0.1% over the combined range of zero to full load and input voltages over the range specified by the individual laboratories.

5. Temperature Coefficient

   The voltage coefficient for changes in ambient temperature over the range specified by the individual laboratories shall not exceed 0.02% per degree C.

6. Stability

   After a 30-minute warmup, the voltage shall vary no more than 0.1% of the nominal value at any time during any 24-hour period, at constant temperature, load and line voltage. Long-term stability shall be governed by the voltage tolerance specification that requires that the voltages shall not differ from the nominal values by more than ±1/2%.

7. Output Impedance

   The output impedance of the supply shall be less than 0.3 ohm at any frequency up to 100 KC.

8. Recovery Time

   The voltages shall recover to within ±0.1% of the specified voltage within 50 μsec for any change in input voltage and load current within the specifications.

9. Noise and Ripple

   The voltage noise and ripple shall not exceed 3 millivolts peak to peak for any combination of line and load within the specifications, as measured with an oscilloscope with a passband extending from dc to 50 Mc.

Comment: Complete specification of a power supply requires consideration of many additional details. The individual laboratories have different requirements in many of the details including shielding, transformer type, input voltage, etc. Specification of the non-standard items is the prerogative of the individual laboratories. Appendix A is a power supply specification prepared by one of the laboratories and is presented here as an illustration of a typical total specification for a power supply in conformance with the bin power supply specifications and including also the requirements of a specific laboratory. Since Appendix A represents a high quality, moderate cost supply, it will be useful to many laboratories.

GENERAL PURPOSE BIN POWER SUPPLY

This supply shall meet all the specifications listed under Power Requirements for Standard Modules and shall provide the four standar voltages to the bin.

QUALITY SHIELDING REQUIREMENTS (OPTIONAL)

Under conditions of high electrical ambient noise it is necessary to pay special attention to shielding. The individual laboratories may, at their discretion, specify adherence to the "quality shielding requirements" as listed below:

1. The modules shall be constructed of high conductance material such as cadmium-plated steel and all joints between various parts of the module shall be high conductance such that the resistance between any two parts of the shielding shall not exceed 0.01 ohm.

2. The integrity of shielding between modules shall be provided by (a) interleaved hoods surrounding both the module and bin power connectors, and (b) shielding the volume behind the bin power connectors (see Drawing ND-518). All power and signal cables that cross through this shielded volume shall do so through suitable feed-through filters or braid grounding clamps.

3. The maximum ventilating hole size shall be 5/32" D (see Module, Specific Requirements, Ventilation).

SUGGESTIONS

The Committee is receptive to proposals for future improvement of the standard modules and urges individuals and laboratories to bring suggestions to the attention of the Chairman for consideratio

DRAWINGS

All drawings referred to herein may be obtained from:

Division of Technical Information Extension
U. S. Atomic Energy Commission
P. O. Box 62
Oak Ridge, Tennessee 37831

TABLE I

Drawing List

Specification Drawings for 5 1/4" Standard Module System

NA-500	Print List
ND-503	Bin, Front View
ND-504	Bin, Rear View
ND-505	Bin, Side View
ND-506	Bin, Top View
ND-507	Module
NC-514	Connector Wiring
NA-517	Module Panel Adapter

Specification Drawings for 8 3/4" Standard Module System

NA-501	Print List
ND-508	Bin, Front View
ND-509	Bin, Rear View
ND-510	Bin, Side View
ND-506	Bin, Top View
ND-512	Module
NC-514	Connector Wiring
NA-517	Module Panel Adapter

Illustrative Drawings

ND-515	Typical Bin Power Supply Package
ND-516	Typical Bin Extender
ND-518	Typical Shielding Details
ND-519	Typical Connector Layouts

NOTE: All drawings listed herein are available from:

Division of Technical Information Extension
U. S. Atomic Energy Commission
P. O. Box 62
Oak Ridge, Tennessee 37831

LAWRENCE RADIATION LABORATORY
UNIVERSITY OF CALIFORNIA
Berkeley 4, California

POWER SUPPLY SPECIFICATION

1.0 GENERAL

This is the specification for a power supply which will be mounted rear of a modular instrumentation bin. Due to the restricted volume av and high operational reliability required, only the highest quality com should be employed. All semiconductor components shall be constructed silicon. No internal fans or blowers shall be employed. See Fig. 1 - Diagram of the unit.

2.0 INPUT

The input voltage range is 100 to 130 volts, 55 to 65 c.p.s., 1 ph Taps for 110, 115 and 120 volts nominal input voltage are acceptable.

3.0 OUTPUT

Provide four simultaneous outputs of +12.000, -12.000, +24.000, -2 volts, each at 0 to 1 ampere. The common ground return terminal shall be chassis ground.

4.0 REGULATION

Two alternate regulation specifications are acceptable:

4.1 The output voltages shall not vary by more than ±0.1% over the com range of zero to full load and input voltages of 100 to 130 volts.

4.2 The output voltages shall not vary by more than ±0.1% over the com range zero to full load and input voltage of 100 to 120, 105 to 12 110 to 130 volts. The three ranges are to be selected by a power transformer tap.

5.0 TEMPERATURE

The ambient temperature range is from 0°C to 50°C without derating Operation to 60°C ambient shall be possible with a current derating not exceed 3%/°C for temperatures above 50°C.

6.0 TEMPERATURE COEFFICIENT

The output voltage coefficients for changes in ambient temperature between 0°C and 60°C shall not exceed 0.02%/°C.

7.0 THERMAL PROTECTION

Two thermal protection circuits shall be provided:

7.1 A thermal switch closing when the ambient temperature in the vicin of the power supply has exceeded 60°C. Two leads shall be provide which the user may connect a pilot lamp to indicate the switch clo The voltage supplied shall be either 6, 12 or 24 volts.

7.2 A thermal switch disabling the power supply when the temperature e a safe operating value. Two leads shall be provided to which the may connect a pilot lamp to indicate the power supply has been dis The voltage supplied shall be either 6, 12 or 115 volts.

8.0 NOISE AND RIPPLE

The output voltage noise and ripple shall not exceed 3 mV peak-to- as observed on an oscilloscope with a 50 mc bandwidth.

9.0 VOLTAGE ADJUSTMENT

The output voltages shall be adjustable over a nominal range of ±1 They shall be made by screwdriver adjustments accessible through the re the supply. The minimum resetability of each output voltage shall be w ±0.1% of the specified value.

10.0 STABILITY

The output voltage shall not vary by more than +0.1% over an 8 hou period after a 30 minute warm-up. The output voltage shall not drift m than 0.3% over a 6 month's period.

11.0 RECOVERY TIME

The output shall recover to within ±0.1% of the specified output voltage within 50 μs for any change in input voltage and load current w the specifications.

12.0 POWER TRANSFORMER

The power supply shall be designed so that a membrane-type power transformer can be employed.

13.0 DIMENSIONS

The power supply dimensions shall be as shown on Drawing ND-515.

14.0 SHIELDING

The entire power supply shall be enclosed with an integral metal ele static shield. All components shall be contained within this shield. Pa of the shield may be screwed together with screws spaced no more than 2 i apart. Heat sink fins may be employed as part of the shield. The shield may be perforated with holes up to 1/8" diameter to provide additional co No part of the shield shall have a resistance greater than .010 ohms to a other part of the shield.

15.0 TERMINALS

All input, output, thermal protection, and common ground terminals s be brought out through grommets as shown in Fig. 1. The leads shall be a least 8" long.

16.0 PROTECTION

The input of the power supply shall be protected with a fuse of adea rating. The fuse shall be accessible from the rear behind a shielded co The output of the supply shall be short-circuit protected by means of an electronic circuit. The current limiting threshold shall be set at 1.5 a within ±20%. The output voltage shall be resumed after the short has bee removed. A continuous short circuit shall not damage the supply; howeve: it is permissable for the input fuse to blow.

No power supply operation or failure shall result in the output vol exceeding 125% of the steady-state value.

17.0 MECHANICAL CONSTRUCTION

17.1 Insulating materials such as printed wiring boards shall be flame r

17.2 All components shall be accessible for testing and replacement.

17.3 Chassis Markings: Major components such as transistors, transforme (including taps), large capacitors, resistors, controls and termina shall be marked in the most readable position in the unit with resp to their identification on the schematic diagram.

18.0 FINISH

The front surface to which the power supply is fastened to the bin s be either cadmium plated or iridite. The finish on the remainder of the is left to the option of the manufacturer.

19.0 Two (2) copies of the schematic circuit diagram shall be provided.

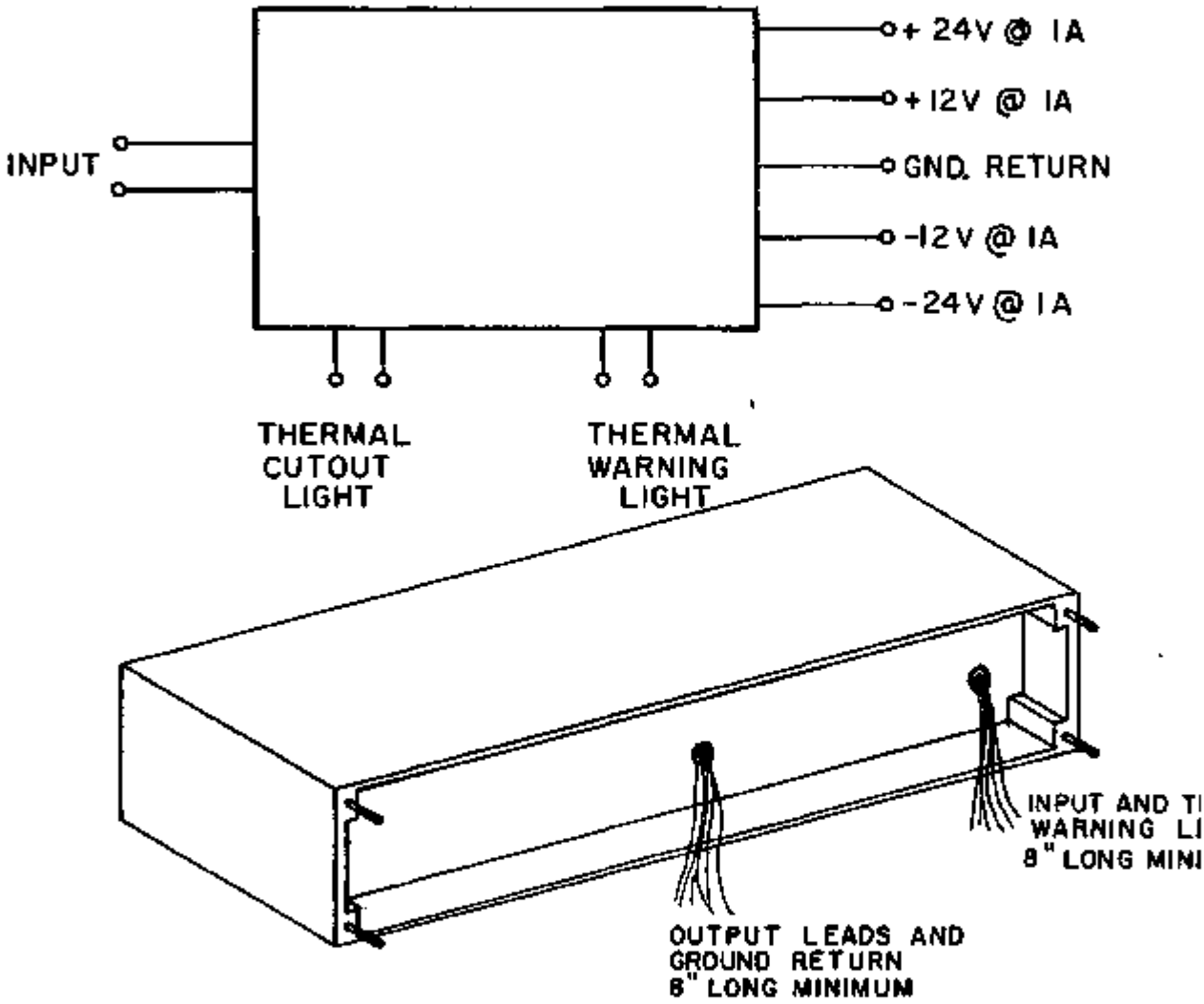

FIG. 1 BLOCK DIAGRAM AND LEAD INFORMATION

MEMBERSHIP

AEC COMMITTEE ON NUCLEAR INSTRUMENT MODULES

Organization	Representatives
National Bureau of Standards	Louis Costrell (Chairman)
U. S. Atomic Energy Commission	H. R. Wasson (AEC Liaison)
	R. L. Darneal
Argonne National Laboratory	T. W. Hoffer
	S. J. Rudnick
	M. G. Strauss
Brookhaven National Laboratory	S. Rankowitz
	L. H. Redmond
Columbia University	V. Guiragossian
	J. Hahn
Hanford Laboratories	W. G. Spear
Lawrence Radiation Laboratory Berkeley	A. E. Larsh, Jr.
	D. A. Mack
Lawrence Radiation Laboratory Livermore	C. A. Van DenHeuvel
Los Alamos Scientific Laboratory	N. A. Lindsay
Oak Ridge National Laboratory	S. H. Hanauer
	N. W. Hill
	G. A. Holt
U. S. AEC, Health and Safety Laboratory	N. Latner

Ad Hoc Committee that met on February 26, 1964
in Washington, D. C., to organize
AEC Committee on Nuclear Instrument Modules

F. S. Goulding (Chairman)	Lawrence Radiation Laboratory, Berkele
R. J. Berte	U. S. Atomic Energy Commission
C. J. Borkowski	Oak Ridge National Laboratory
D. B. Brown	Hanford Laboratories
M. E. Cassidy	U. S. AEC, Health and Safety Laborator
L. Costrell	National Bureau of Standards
R. L. Darneal	U. S. Atomic Energy Commission
R. T. Graveson	U. S. AEC, Health and Safety Laborator
R. Hiebert	Los Alamos Scientific Laboratory
W. A. Higinbotham	Brookhaven National Laboratory
R. C. Kaifer	Lawrence Radiation Laboratory, Livermo
N. A. Lindsay	Los Alamos Scientific Laboratory
A. E. Larsh, Jr.	Lawrence Radiation Laboratory, Berkele
D. A. Mack	Lawrence Radiation Laboratory, Berkele
C. Sewell	Lawrence Radiation Laboratory, Livermo
M. G. Strauss	Argonne National Laboratory
H. R. Wasson	U. S. Atomic Energy Commission

GPO 878-938

ATOMIC ENERGY COMMISSION
WASHINGTON, D.C. 20545

Materials 7

No. IN-584
Tel. 973-3335 or
973-3446

FOR IMMEDIATE RELEASE
(Tuesday, May 4, 1965)

AEC TO RECRUIT LABORATORIES FOR URANIUM, PLUTONIUM MEASUREMENTS

The Atomic Energy Commission today announced plans to recruit industrial and private commercial laboratories both in the U.S. and abroad to act as uranium and plutonium measurement umpires in the growing number of transfers of special nuclear materials resulting from domestic and foreign nuclear power programs.

Principally as a result of these programs, the Commission is entering into an increasing number of transactions with domestic private industry and with foreign governments involving monetary payments for the sale, lease or purchase of plutonium and uranium. These payments are based on measurements of the quantity and quality of the materials involved.

Since differences in measurements are likely to arise between shippers and receivers, differences in monetary value also will be involved and, in some cases, could be of significant proportions. Thus, the Commission feels the need for identifying and qualifying independent laboratories which could act as umpires in settling possible measurement disputes. Laboratories so qualified would be approved by the AEC to act as umpires according to the choice of the other party to the dispute.

Although AEC procurement regulations provide that, for domestic transactions, special nuclear material contracts shall include provision for the use of an umpire to settle measurement differences, measurement differences encountered so far requiring umpires have been relatively few. Now, however, both the burgeoning domestic and foreign

(more)

nuclear power programs and the advent of private ownership of nuclear fuel have emphasized the need for finding independent laboratories which could act in this capacity.

Industrial and private commercial laboratories which would liked to be considered for appointment as measurement umpires will be sent samples of special nuclear materials for analysis of their uranium and plutonium concentration, isotopic composition and the presence of impurities.

Analytical methods to be used are those published in the book, "Selected Measurement Methods for Plutonium and Uranium in the Nuclear Fuel Cycle," TID-7029, by R. J. Jones. The book is available from the Superintendent of Documents, U.S. Government Printing Office, Washington, D.C., for $3.50 per copy. For properties to be measured -- but for which no measurement methods have been included in this publication -- methods presently used by AEC facilities will be specified. Other methods of measurement or modifications of published methods may be used if they can be shown to be equal to or superior to those specified and are approved by the AEC.

Laboratories will be considered for qualification as approved AEC measurement umpires on the basis of their laboratory capabilities, personnel qualifications and analytical performance on the submitted samples. Initial qualification will be maintained by continuing laboratory evaluation.

The AEC Division of Nuclear Materials Management, which is sponsoring this program, has selected Dr. Fred H. Tingey, of the Phillips Petroleum Company, Idaho Falls, Idaho, to administer it.

Domestic industrial and private commercial laboratories which wish to be considered for qualification should write directly to Dr. Tingey at Idaho Falls. Foreign laboratories should write to the Director, Division of International Affairs, U.S Atomic Energy Commission, Washington, D.C. 20545.

(more)

(NOTE TO EDITORS AND CORRESPONDENTS: This announcement is being distributed simultaneously in Idaho Falls, Idaho, by the Commission's Idaho Operations Office.)

#

5/4/65

CRAIG HOSMER
MEMBER OF CONGRESS
CALIFORNIA

10

COMMITTEES:
JOINT COMMITTEE ON
ATOMIC ENERGY
INTERIOR AND INSULAR AFFAIRS

Congress of the United States
House of Representatives
Washington, D. C.

April 28, 1965

Dear Glen:

I am attaching a letter to me dated April 21st from Marvin Solomon, President of Nuclear Supplies Corporation of Encino, California.

The letter points out some difficulties which may be occasioned to the industry by certain AEC specifications which have recently been promulgated.

I am wondering if the specifications might be reviewed to determine for certain whether or not they are an undue burden and as to the possibility of such changes as might be provident to protect the private Nuclear industry.

Thank you for your courtesy and consideration.

Very truly yours,

CRAIG HOSMER
Member of Congress

CH/p

Dr. Glenn T. Seaborg, Chairman
United States Atomic Energy Commission
Washington, D. C.

4-28-65

NUCLEAR SUPPLIES
INCORPORATED

AC 213
787-1722

P.O. BOX 313 • ENCINO, CALIFORNIA

April 21, 1965

The Honorable Craig Hosmer
Congress of the United States
House of Representatives
Washington, D. C.

Dear Congressman Hosmer:

Reference is herein made to the enclosed article and standard specifications for radiation measurement modules recently set forth by the AEC for their National Laboratories. In the event you are not already aware of the new standards and problems that may face the industry due to these new standards, I would like to bring it to your attention.

In my estimation the two companies who presently meet the new standards, sold less than 3% of the total nuclear instrumentation market in the past. It is difficult to determine if this will have any effect on Nuclear Supplies because our modules are non-standard according to the AEC specification. Also, the major suppliers of modules in the U. S., Nuclear-Chicago (RIDL Division) recently spent a great deal of money for tooling for non-AEC standard modules. I do not know whether or not they were aware of the forthcoming specifications from the AEC, but the enclosed article indicates they were not.

It is possible that the decision to set forth specific standards may hinder some advancement in technology and increase costs where it is not necessary, i.e., the voltage specified will require more expensive transistors and components which may not increase reliability and performance. Also, Nuclear Supplies, after 12 months of study, decided last year to give our modules a more universal approach to connection so that the user would have more versatility and systems combination. We went to a new plug-in approach, considerably different from the AEC specified standard, in order to offer more flexibility than was presently available on the market. In order to sell the National Laboratories, we must revert backwards to a method we feel gives less flexibility — it is the customer who loses.

I understand this is a great problem, that of standardizing an industry's electronics, but by doing this we may be limiting the desire of manufacturers to develop new techniques for more inexpensive, more reliable and more universal equipment.

In the event this is of specific interest, I would be happy to go into greater detail with you, and I am sure that every nuclear instrument manufacturer is weighing this new bit of news carefully prior to committing themselves.

Very truly yours,

NUCLEAR SUPPLIES, Inc.

Marvin R. Solomon

Marvin R. Solomon
President

MRS/hmc

Enclosures

MODEL [illegible]

TRANSISTORIZED

POWER SUPPLY

Continuously adjustable 400-3000 volts
Low voltage: Line regulation better than ±0.05%
High voltage: Line regulation ±0.003%

MODEL [illegible]

TRANSISTORIZED

LINEAR AMPLIFIER

Input sensitivity: 0.05 μA
Clipping: Double DL or RC
Current pulse can be integrated to provide voltage pulse output
Rise time better than 50 nano sec.

MODEL [illegible]

TRANSISTORIZED

PULSE HEIGHT ANALYZERS

Three models available:
Integral Discriminator
Manual
Automatic Scan

TRANSISTORIZED MODEL [illegible]

LINEAR RATEMETER

6 ranges—4 time constants
Alarm circuit
10mv recorder output
Range suppress
Input impedance: 50 ohms
Input sensitivity: 10-500 μA

MODEL [illegible]

TRANSISTORIZED

PREAMPLIFIER

Gain: Adjustable, 70 to 400
Rise time: 200 nano seconds
Noise: Less than 0.05 μa
Power requirement: —9V, 3 mA

KOBE KOGYO

TEN

CORPORATION

Manufactured exclusively for NUCLEAR SUPPLIES by the world's first company to successfully build transistorized nuclear equipment, Kobe Kogyo Corporation of Japan.

Complete line of instruments, modules, automatic systems and accessories listed in new catalog. Write to P.O. Box 312, Encino, California, or Telephone, Area Code 213, 787-1722.

NUCLEAR SUPPLIES INCORPORATED

NUCLEAR INSTRUMENTATION STANDARDS

The National Laboratories, in a series of meetings last year, decided on a few basic standards they would like nuclear instrumentation manufacturers to adhere to. Basically the standards imposed upon the manufacturers are module size (so that the units will fit into standard bins), on power supply and on connectors. Circuit design, performance and appearance are up to the suppliers, and provide the normal area of competition for which suppliers are so well known. The new-instrument market for the National Laboratories is estimated at about $7 M a year.

Depending on whom one talks to, reactions to the standards vary from great enthusiasm to considerable consternation. Most common response: "Why did the National Laboratories set up a standard of their own when organizations such as Underwriters, ASA and Committee E-10 of ASTM were available and actually desirous of formulating these standards?" Some suppliers consider the Standards unilateral, in that it is normal for the conditions to be agreed to by maker and user rather than one imposing his will upon the other. The rebuttal to this argument says that the National Laboratories could have achieved the same effect by calling for specifications or by putting purchases on a qualified-products list.

At present, only Hamner and ORTEC are prepared to meet the standards and have units available. Both, of course, look forward to increased National Laboratory business and the University business that is expected to develop from alliances with the laboratories. Companies that don't have qualifying instruments predict that it would cost about $100 000 to tool up for this business. Their question then is whether it is better to use this money for new developments that the laboratories would want under any circumstances. This question is still being debated.

One supplier of above-average equipment and highly respected by the laboratories was somewhat disturbed that he and other suppliers were not given several years notice of the laboratories' intentions. He recently tooled up to produce equipment of superior performance, but it does not meet voltage requirements. Other suppliers feel that the Standard exerts considerable pressure and they will conform in time. Multichannel - analyzer manufacturers feel the Standard provides an opportunity to expand their market because their present units are composed of circuits that can be modulized, thereby taking them into this market.

The big companies are still uncommitted as they debate whether the National Laboratories will grow at a good rate, level off, or even eventually decline under the nation's present administration. They seem sure that the college market will grow, the medical market will accelerate, and that industry is a sleeping giant.

In the meantime, the smaller supplier sees a clear-cut short-term market that will help him grow and diversify. The individual user is of course pleased with the Standards, but nonetheless will maintain his right to purchase additional equipment from a non-standard supplier.

by Richard R. Quinn

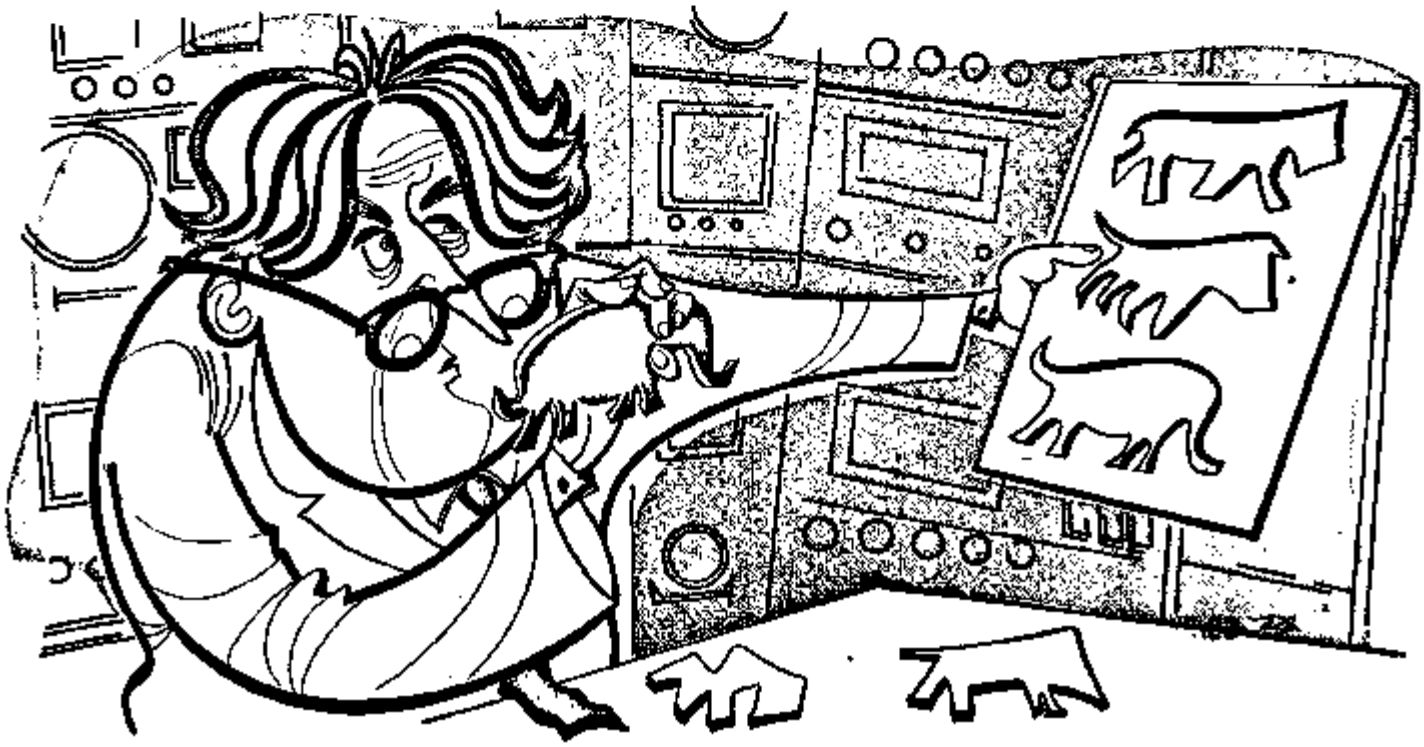

Society News

MALCOLM FERRIER JOHNS
UNIVERSITY OF CHICAGO STAFF

Malcolm Ferrier, Managing Editor of the American Nuclear Society since July 1962, has accepted a position with the University of Chicago as Associate Director for Planning and Development.

Under his supervision, the Society's six major publications have achieved an enviable stature in the industry. Malcolm's editorship of *Nuclear News* has brought our magazine increased reader interest in all phases of the nuclear-energy program. The magazine, which started out a small press-release type publication, now with its regular review articles, features and up-to-date inside news information, has become a significant publication in the field.

During Malcolm's term with ANS he supervised the process of the Society becoming its own publisher of *NS&E*. The transition was not only smooth, but the appearance and readability of the journal have constantly improved.

The *Monograph* program, which originally started on a one-year contract with the AEC for three books, has grown under his guidance to encompass eleven books now in preparation, with two books already published.

The methods for preparing and publishing the *Transactions* and *Proceedings* have been set up by him in a routine and orderly fashion, removing many of the problems normally associated with once- or twice-a-year publications of this type.

We feel sure that Society members and Malcolm's many other contacts throughout the industry will miss his breezy Scottish air, and join us in wishing

May the best you've ever seen
Be the worst you'll ever see
May the moose never leave your pantry
Wae a tear drap in its ee
May your lum keep blithely reeking
Tae yer auld enough tae dee
And may ye aye be just as happy
As we want ye aye tae be.

Robert Burns

ANS SPEAKERS' BUREAU

Most members of the American Nuclear Society are well aware of the abysmal lack of knowledge and understanding of nuclear science and industry on the part of the general public and of the unfortunate results of this public ignorance and misinformation.

The Board of Directors of ANS has stated in a Policy Resolution (see October 29, 1964 letter from W. Friend, Chairman of ANS Bylaws and Rules Committee) that "the Society's status as the principal scientific and educational organization devoted to the advancement of nuclear-energy research and development carries with it responsibility for helping the layman to understand and evaluate the various efforts in this field and is now ready to accept this challenge and join with those organizations already working at the task of raising the level of public understanding of science in general and nuclear energy in particular."

Accordingly, at their meeting in Philadelphia in June 1964 the Board of Directors approved the establishment of an ad hoc committee on Public Information. This committee was formed and met for the first time at the Winter Meeting in San Francisco. As a first step in setting up an ANS public-information program the ad hoc committee proposes to establish a speakers' bureau to provide experts to speak on the basic aspects of nuclear science, engineering and industry to high school and college students, service clubs, civic organizations and other groups of the lay public. The intention here is both to make the public aware of the problems and potentials of the nuclear field as well as to reduce the spread of misinformation.

It should be clearly understood that the Society would be serving only as a clearinghouse or broker. ANS members would be speaking as individuals—not as representatives of or spokesmen for the Society.

What is needed are scientists and engineers who can speak with authority, using simple nontechnical terms, on elementary topics such as "What Are the Present Benefits of Nuclear Energy," "What is a Nuclear Reactor," "Uses of Radioisotopes Today," etc. The committee, hopefully, will be able to provide assistance to the speakers in the form of speech outlines, background information, sets of slides, booklets and bibliographies to be handed out after the talk, etc. Anyone interested in giving such talks and/or helping to prepare speakers' aids should fill out and return this month's

UNITED STATES
ATOMIC ENERGY COMMISSION
WASHINGTON, D.C. 20545

B-425

No. IN-562
Tel. 973-3335 or
973-3446

FOR IMMEDIATE RELEASE
(Wednesday, February 24, 1965)

ATOMIC AND MOLECULAR PROCESSES INFORMATION CENTER ESTABLISHED AT OAK RIDGE NATIONAL LABORATORY

An Atomic and Molecular Processes Information Center has been established at the Atomic Energy Commission's Oak Ridge (Tennessee) National Laboratory to compile and evaluate data on atomic and molecular physics.

Sponsored jointly by the National Bureau of Standards and the Atomic Energy Commission, the center will be part of the National Standard Reference Data program and will serve as a focal point for the collection, storage, evaluation and dissemination of information generated throughout the world. All information will be evaluated by scientists working in the field of atomic and molecular collisions.

Initially the center's activities will be limited to atomic and molecular cross-section data and other particle collision process information in these specific areas: (1) the interaction of heavy particles, (2) particle penetration through matter, and (3) excitation, dissociation, ionization and detachment by external electric and magnetic fields.

The new information center will contribute to the systematic data-compiling activities in the United States. The National Standard Reference Data program was established in 1963 to coordinate data-compiling activities under Government sponsorship. The National Bureau of Standards administers the program.

The center will begin full operation about July 1, when inquiries may be addressed to C. F. Barnett, Director, Atomic and Molecular Processes Information Center, Oak

(more)

Ridge National Laboratory, P.O. Box Y, Oak Ridge, Tennessee.

The Laboratory, one of the nation's principal atomic energy research and development facilities, is operated by Union Carbide Corporation for the AEC.

#

2/24/65

December 11, 1964

MEMORANDUM FOR CHAIRMAN STARBIRD

FROM: JOHN V. VINCIGUERRA, GENERAL MANAGER

SUBJECT: ACTIVITIES OF THE U. S. ATOMIC ENERGY COMMISSION COMMITTEE ON SOLIDS DETECTOR MODULES

On several occasions in the latter part of 1963 personnel of the National Laboratories spoke to us about difficulties they were having because instrumentation systems designed at different laboratories were incompatible electrically and mechanically. Incompatibility was due almost entirely to diverse arbitrary choices of many parameter values and physical details which are amenable to standardization.

Standards that have been developed for vacuum tube electronics systems cover certain electrical and physical characteristics which facilitate interchangeability and relieve many design problems. These existing standards agreements are generally not appropriate for solare systems based on solid state devices, and consequently the necessary design decisions have been made locally by the individual designers. Since many values can be fixed arbitrarily, it is not surprising to find that numerous excellent but incompatible systems have emerged. Too frequently investigators at one laboratory cannot utilize an advanced subassembly design originating elsewhere without redesigning it to fit local systems. Similar problems are faced by workers who want to perform experiments away from their home laboratories.

Some people felt that uncoordinated development was too widespread to expect a really useful degree of standardization to be achieved. The consensus, however, was that the possibilities for agreements among the National Laboratory instrumentation groups for their own benefit should be explored.

Accordingly, Laboratory representatives were invited to a discussion meeting in Washington, which was arranged to coincide with the Ninth Scintillation and Semiconductor Counter Symposium in February 1964. The February 26 meeting was attended by

12-11-64

seventeen representatives of the Laboratories, plus two from the Division of Biology and Medicine (DBM) and one from the Division of Industrial Participation (DIP). The DIP representative was invited in anticipation that industrial inquiries would be directed to them. It was generally agreed that a standard module system was both desirable and feasible; so a permanent committee was selected (with Mr. Louis Costrell, National Bureau of Standards (NBS), Chairman and Dr. Stephen Lawrence, Oak Ridge National Laboratory as Secretary) and instructed to produce a standard module by the end of the summer. Initial objectives were deliberately limited because of the problems expected in working out compromises among the varied laboratory systems.

Members were appointed from Columbia University to represent the views and interest of off-site university laboratories, and information was sought actively by Princeton University and by Atomic Energy of Canada, Limited (AECL), Chalk River, Ontario. The views on module standardization were solicited and received from Atomic Energy Research Establishment (AERE), Harwell, England, because of their experience in module standardization.

In an attempt to satisfy both the working needs of the Committee and the natural desire of industry for current information, the following working rules were established for the initial meetings:

a. restrict attendance at meetings solely to members;

b. instruct members to respond freely and candidly to any industrial representatives who call on them, but refer requests for public statements to the Chairman;

c. prepare a report of Committee actions as soon as possible and make it available to all interested parties.

Great care was taken during working sessions to defer or reject consideration of items not now having directly an interchangeability. Matters such as logic voltage levels, analog voltage levels, fast timing pulses, etc., which will surely become important considerations for standardization, have been assigned to subcommittee study groups.

After three formal monthly working sessions in Chicago initial problems had been resolved and agreement reached on the necessary features of a standard module to be adopted by the instrumentation groups at the National Laboratories. A subcommittee headed by the chairman was appointed to prepare a report, which, after review by

Committee members, has been released as USAEC Report TID-20693. Nuclear instruments manufacturers have shown great interest in the standardization work. There was a fair amount of grumbling at first, however, they now appear to be generally favorably disposed toward it. There have been numerous requests for detailed information which the first report should satisfy. In some instances companies have indicated they postponed final design decisions until this information was received.

The Committee has no authority to compel any laboratory to conform to the standard. However, the standard has been worked out and approved by persons who are responsible for instrumentation design in the laboratories, and who are convinced that such an effort will be of great benefit to them. Because of this, we expect the standard module system adopted will be applied to the design and fabrication of new modular subassemblies at AEC laboratories and can be expected to spread to other appropriate university and Government laboratories. Non-AEC laboratories that have said they were adopting the standard are include: Stanford Linear Accelerator, Columbia University, Princeton-Pennsylvania Accelerator, ANCL, and the Naval Research Laboratory. We can expect that savings in time and money will stimulate consideration of additional applicable standardization. Other modular systems now in use will continue to be employed until they are obsolete. Because of this it seems unlikely that any manufacturer will really be hurt. Even though these agreements are "in-house" in origin, their existence will certainly influence manufacturers in their new designs.

It is intended that the Committee continue in existence indefinitely to consider new standardization problems as they arise. The Committee plans now to acquaint interested commercial organizations with agenda items prior to the meeting at which these items are to be considered. It is intended that this be done through a list of organizations to be supplied by the Division of Industrial Participation.

Mr. Hanson has had conversations with a NEP representative on at least two occasions, during which the background plans and actions of the Standards Committee were explained to him. In addition, the Committee report was distributed and discussed at the October, 1964, meeting of the American Standards Association, which was attended by Mr. Hanson.

[illegible]

[illegible]

[illegible]

Dear Mr. Barnes:

Thank you for your letter of November 13, 1964, regarding standard instrument modules. This is a subject in which we have considerable interest and the views of members of the Nuclear Instruments Industry are, of course, valuable to us.

The planning stages of the standardizing effort involved primarily an assessment of the needs of the Laboratories. Subsequently, however, Committee members were encouraged to discuss the work of the Committee freely with industrial representatives, and, in fact, many manufacturers have had mutually beneficial discussions at the Laboratories. It was also considered important that the entire industry should be made uniformly aware of the Committee's work as rapidly as practicable, and the Committee has made every effort to accomplish this through prompt publication of the results.

Interchangeability is the objective, as you have indicated. Although modules may, indeed, vary in aspects not covered by the standard, if the standard is observed where it applies, these variations should not prevent interchangeability within and among the Laboratories. Special instruments for unique applications would not be expected necessarily to conform to the standard. If, in spite of the great care taken to promote interchangeability, some aspects of the standard tend to defeat this objective, the Committee would very much like to know about it.

We share your concern that the present instrument investment be protected and this matter has been considered. We believe that the laboratory investments in instrumentation will not be jeopardized since present items of equipment will continue to be utilized through their useful lives.

It is certainly true that standardization must not interfere with technological developments and one must exercise restraint and good judgment to ensure this. In accordance with this view, standardization has been restricted to items necessary to accomplish the

interchangeability objective. Manufacturing techniques, circuit design, etc., have not been standardized. This gives the designer full rein in using his ingenuity to advance the state of the art and in providing the improved instrumentation that we agree is essential.

As stated on Page 5 of the U. S. Atomic Energy Commission (AEC) Report (TID-20893), the Committee is receptive to proposals for improvement of the standard modules and urges interested parties to bring suggestions to the Committee's attention. We recognize that the experiences of interested instrumentation groups and individuals outside the laboratories can be of considerable value, and the Committee is anxious to give consideration to industry standards, including those of the American Standards Association. Means are being investigated for keeping the industry properly informed with respect to items the Committee plans to consider. This will enable the Committee to receive comments and proposals from industry, organizations and individuals.

We appreciate receiving your comments and will be more than happy to discuss them in detail. Please contact Dr. Spofford G. English, Assistant General Manager for Research and Development, regarding any discussion on this matter.

Sincerely yours,

Chairman

Mr. John L. Burnum
Vice President
Nuclear-Chicago Corporation
333 East Howard Avenue
at Nuclear Drive
Des Plaines, Illinois

Materials-7

Sanitized

DEC 1 1964

MEMORANDUM FOR COMMISSIONER HAWS

THROUGH GENERAL MANAGER E. J. BLOCH

SUBJECT: FISCAL YEAR 1965 FUNDING OF THE NATIONAL STANDARD REFERENCE DATA SYSTEM (NSRDS) PROGRAM

Upon your suggestion, we reviewed the activities of the National Standard Reference Data System (NSRDS), including proposed FY 65 incremental activities (described in the attachment) for which inter-agency funding was sought at the recent meeting of the Federal Council on Science and Technology.

Background

After approval by the Federal Council, the NSRDS was established on June 7, 1963 at the National Bureau of Standards (NBS) to provide a single point of responsibility for all Federally supported data-compilation activities in the physical and engineering sciences. To provide funds for immediate implementation of Federal Council on NSRDS, the Office of Science and Technology asked four agencies to contribute $200,000 of FY 64 funds to NBS ($200,000 each from AEC, NASA, DOD and NSF). At that time, we were told that NSRDS funding for subsequent years would be secured through regular channels.

Conclusion

In our opinion, the additional NSRDS activities proposed by Dr. Artin for FY 65 interagency funding are worthwhile, but of low-order importance or urgency to AEC research and information programs. Because of the low order of priority coupled with dollar limitations within the AEC we would not recommend that the AEC transfer funds to NBS. However, our opinion is apparently not shared by OST and we understand that Dr. Hornig plans to send a letter requesting $200,000 from four agencies, (AEC, DOD, NASA, and NSF).

cy filed CAF-65

Should the Commission decide to provide additional FY 1969 funding for NSIC, I recommend that AEC support be limited to $50,000. As we have discussed, funds are just not available in DTI's FY 69 budget. Any support necessarily would come from research and development programs at the expense of other worthwhile AEC activities. These views are shared by ACDA and ARPA.

Original signed by
Edward J. Brunenkant

Edward J. Brunenkant, Director
Division of Technical Information

Attachment: Memo Cope Bragg to Bibley dated 6/25/69

cc: Chairman Hamburg
Commissioner Bibley
Commissioner Zarem
Commissioner Tape
W. B. McCool (2)

Contract 5-9

nuclear-chicago
CORPORATION

333 EAST HOWARD AVENUE AT NUCLEAR DRIVE · DES PLAINES, ILLINOIS · TELEPHONE 827-4456 AREA CODE 312 · CABLE: NUCLEAR

JOHN L. KURANZ
VICE-PRESIDENT

November 13, 1964

Dr. Glenn Seaborg, Chairman
United States Atomic Energy Commission
Washington 25, D. C.

Dear Dr. Seaborg:

I am writing to you about a matter of importance to both the AEC and the nuclear instrument manufacturing industry. Specifically this is on the National Laboratories Standards Program for nuclear instrumentation.

In our efforts to achieve real market or customer orientation, we constantly remind ourselves that success depends on our ability to be attentive to the true instrumentation and service requirements of our customers, rather than just developing and manufacturing the products that we want to build. For this reason, we have viewed the National Laboratories Standards Program as an opportunity for us to learn more about the real needs of our very good customers, the National Laboratories, to enable us to serve them better. We felt that a Standards Program designed to enable a scientist at any National Lab facility to derive greater use and benefit from the instrumentation at all National Laboratories facilities would not only assure better utilization of taxpayer dollars, but could provide commercial nuclear instrument manufacturers with guidelines on how they can improve their contribution to this effort.

In such a program, the investment of the National Laboratories in modular nuclear instrumentation could be protected and enhanced. If this were the kind of thinking that led to the development of the Standards Program, we were confident that the following considerations would be an integral part of it:

11-13-64

1. At some point along the way, the commercial instrument companies would be asked to suggest approaches to the Standards Program, which would achieve the desired standardization, as well as assuring the active participation and contribution of the commercial manufacturers.

2. The innovative, engineering, service and quality manufacturing capabilities of potential suppliers of Standards Program modular instruments would be considered in the establishment of the Standards Program as well as in the actual procurement of instrumentation under the Program.

3. Check points would be set up so that a change in the direction of the Standards Program would be effected if the technological innovations and other contributions of industry to the program seemed to be slowing down.

We now must say we have serious reservations that the Standards Program as we now understand it would really be to the benefit of the National Laboratories, or that it will stimulate the commercial manufactuers to do a better job for them. The following points indicate several areas of concern:

1. Variations by the individual National Laboratories have been permitted to the extent that complete interchangeability (an expressed objective) has not been achieved.

2. Although the above indicated variations to allow and even encourage the individuality of various National Labs have been permitted, other variations which might enable commercial instrument manufacturers to make their present and future commercial instruments compatible with the Standards Program, were not permitted. The dramatic case in point is our RIDL Division, which has sold 13,538 nuclear instrumentation modules at a cost to their customers (including all of the National Laboratories) of $4.1 million. The Standards Program does not allow provisions for protecting that $4.1 million investment since it discourages RIDL from seeking ways of making the Designer Series modular instrumentation compatible with the Standards Program.

3. Several nuclear instrumentation manufacturers asked to participate in the planning stages of the Standards Program. To our knowledge, none were invited, or even consulted. It also appears that the Standards Program was developed without any effort to take into consideration the Standards Program being developed on nuclear instrumentation for the American Standards Association and the Electronic Industries Association.

4. Some of the specifications upon which standardization is suggested would seem to discourage development at the Laboratories or in industry of the next generation of modular nuclear instrumentation. After all, the commercial nuclear instrumentation manufacturer who does more for the scientist by an innovative use of new technology such as miniaturization and molecular electronics will really be serving the National Laboratories best. Had the commercial computer manufacturers accepted a Standards Program that slowed down their innovative efforts ten years ago, we would not today be seeing the important technological advances in that field.

At this point, we must continue to ask ourselves where we can serve all our customers best and we will also consider effective investment of our R & D dollars to develop that next generation of modular instrumentation that will obsolete both our own Designer Series modular instruments and the Standardization Program.

We look forward to discussing with you and others interested in the Standards Program, ways to acheive all of the good objectives of the Standards Program.

Very truly yours,

NUCLEAR-CHICAGO CORPORATION

John L. Kuranz
Vice President

JLK:pdk

CI RECORDS

Materials - 7

U.S. DEPARTMENT OF COMMERCE

NATIONAL BUREAU OF STANDARDS

ADDRESS REPLY TO
NATIONAL BUREAU OF STANDARDS
WASHINGTON 25, D.C.

JUL 17 1964

IN YOUR REPLY
REFER TO FILE NO.
302.00

DL
EMK/ce

444.24

Dr. Glenn T. Seaborg, Chairman
Atomic Energy Commission
Washington, D. C. 20545

Dear Dr. Seaborg:

Thank you very much for giving me your assessment of our Standard Reference Materials Program. Your views, along with others we are receiving, will be very helpful in determining the value of this program to the nation.

The response to my letter has been both instructive and encouraging. Approximately two-thirds of those to whom I wrote have already replied, and from the response certain tentative conclusions seem warranted. Every reply has urged the continuance of the program, and nearly all have said that the standard reference materials are extremely important to the company's laboratories. The great majority have also indicated that industry and private laboratories cannot take over this program, or could do so only at much greater expense and trouble.

Some have suggested expansion of the program and suggested an increase in the prices charged for the materials to cover the cost of such expansion.

It seems evident, therefore, that the National Bureau of Standards will continue the Standard Reference Materials Program and may even consider its expansion, if there is adequate justification. In that event, we will want to reassess the usefulness of the standard reference materials now in stock and develop the best possible criteria for the selection of new materials. To do this we will rely heavily upon organizations such as yours for advice and assistance in determining the direction the program is to take.

This letter is simply to let you know our present thinking and to thank you very much for your cooperation.

Sincerely yours,

A. V. Astin
Director

7-17-64

CIT
DR

JUL 2 1964

Dear Dr. Astin:

This is in response to your letter of June 12th, stating that the Bureau is re-evaluating its Standard Reference materials Program and requesting our view as to whether industrial and private laboratories could take over the service of the Program, and, if so, how much difficulty and expense would be imposed on the AEC by such a move.

I think we can safely assume that private industry has the fundamental know-how and ability to develop and maintain a standard reference materials program adequate for our needs and the needs of those we serve. It is my understanding, however, that privately owned facilities for performing this service presently are quite limited.

As you know, the AEC in the past has requested that certain umpire analyses be performed by the Bureau. These requests have diminished with time and should practically cease within the next year largely as a result of our now having standard reference materials available from your agency. These standards have gained acceptance in resolving nuclear materials measurement disputes without case-by-case recourse to the Bureau as umpire.

The value of Bureau umpire analyses or the use of Bureau-developed standard samples lies in the fact that they represent the work of a disinterested and highly reputable third party. This avoids a situation wherein the AEC would use standard samples developed under its direction in a dispute to which it was a party.

If the Bureau decides to discontinue its Standard Reference Materials Program, it would necessitate the AEC's taking over a segment of the program in some manner. As you know, the Bureau's program of supplying standard reference materials for atomic energy uses has evolved during the past seven years as a joint Bureau-AEC effort.

During the period FY 1957-FY 1963, the AEC expended $561,000 for Bureau operating costs, plus $357,000 for major equipment and facility modifications at the Bureau; starting with FY 1964 the Bureau has funded their own operating costs for this program. To remove this equipment or to duplicate it elsewhere would result in additional costs and require a transition period of about three years. Another significant effect on the AEC, both domestically and internationally, would be in not having standard reference materials to which the Bureau's name imparts prestige and ready acceptance.

Sincerely yours,

(Signed) Glenn T. Seaborg

Chairman

Dr. A. V. Astin
Director
National Bureau of Standards
Washington, D. C. 20234

Distribution:
Chairman's Office (2)
Commissioner Palfrey
Commissioner Ramey
Commissioner Tape
Commissioner Bunting
GM
AGMA

Rewritten: 6/26/64

NBS:SCTMcDowell:ad	NBS:George	AGMA	AGM	DGM	GM
6/26/64	6/ /64	6/ /64	6/ /64	6/ /64	6/ /64

DL 430.18

Martin is -7

U. DEPARTMENT OF COMMERCE

NATIONAL BUREAU OF STANDARDS

Budget Bureau No. 41-6420
Approval expires 9/30/64

ADDRESS REPLY TO
NATIONAL BUREAU OF STANDARDS
WASHINGTON, D.C. 20234

IN YOUR REPLY
REFER TO FILE NO.
30.00

DL.
JM/Rem

JUN 12 1964

Mr. Glenn T. Seaborg, Chairman
Atomic Energy Commission
Washington, D. C. 20545

Dear Mr. Seaborg:

The Bureau of Standards is presently engaged in the reevaluation of its Standard Reference Materials Program. In the past, many businessmen, industrialists, and representatives from Government Laboratories have said that they found this program useful, and they have contributed generously to it and cooperated with us on it in many ways.

The question has been raised, however, whether the existing program should be continued. It has been suggested that the industries are quite capable of carrying on the program themselves. It has also been suggested that much, or all, of the program could be undertaken by private laboratories. The Bureau is particularly sensitive to the second suggestion as it would imply Federal competition with private enterprise, something contrary to Bureau policy. Also, there are many demands upon the Bureau's very limited funds, and we want to use these in the manner which will provide maximum benefit to the nation.

Before making any decisions, therefore, regarding the future of the program, we are writing to the principal firms and government agencies who use these materials.

We need to know: 1) If we eliminate this service, can the industries and private laboratories take it over? 2) How much more difficult or expensive, if at all, would this be for your agency?

Your answers will be very helpful and will be deeply appreciated.

Sincerely yours,

A. V. Astin
Director

6-12-64

Metrials - 7 - Analysis + Tests

UNCLASSIFIED

July 19, 1962

AEC 920/6

COPY NO. 116

AEC 920/6

ATOMIC ENERGY COMMISSION

STATUS OF PROGRAMS FOR STANDARD REFERENCE MATERIALS AND MEASUREMENT METHODS

Note by the Secretary

The Deputy General Manager has requested that the attached memorandum from the Director of Nuclear Materials Management be circulated for the information of the Commission.

W. B. McCool
Secretary

DISTRIBUTION	COPY NO.
Secretary	1
Commissioners	2-6, 122
General Manager	7 - 8
Dir. of Regulation	9
Deputy Dir. of Regulation	10
Deputy Gen. Mgr.	11
Asst. Gen. Mgr.	12
Asst. Gen. Mgr. IA	13
Asst. GM-Plans & Prod.	14
Asst. GM Operations	15
Asst. Gen. Mgr. R&D	16
Asst. Gen. Mgr. Adm.	17
General Counsel	18 - 22
Biology & Medicine	23
Classification	24
Contracts	25 - 27
Controller	28 - 30
Isotope Development	31
Ind. Participation	32
Public Information	33 - 34
Technical Information	35
Inspection	36
Intelligence	37
International Affairs	38 - 43
Licensing & Regulation	44 - 45
Military Application	46
Nuclear Materials Mgmt.	47 - 71
Operations Analysis	72
Plans & Reports	73
Production	74 - 77
Raw Materials	78 - 79
Reactor Development	80 - 88
Manager, Naval Reactors	89
Research	90 - 91
Security	92
Special Projects	93
Albuquerque Oprns.	94 - 96
Chicago Oprns.	97 - 98
Grand Junction Office	99
Hanford	100
Idaho Oprns.	101 - 102
New York Oprns.	103
Oak Ridge Oprns.	104 - 106
Pittsburgh Office	107 - 108
San Francisco Oprns.	109
Savannah River Oprns.	110 - 111
Schenectady Office	112
D. C. Office	113 - 115
Secretariat	116 - 121

UNCLASSIFIED

UNITED STATES GOVERNMENT

Memorandum

TO : Harry S. Traynor, Assistant General Manager for Administration DATE: JUL 11 1962

FROM : Douglas E. George, Director
Division of Nuclear Materials Management

SUBJECT: STATUS OF PROGRAMS FOR STANDARD REFERENCE MATERIALS AND MEASUREMENT METHODS

NMM:RJJ

AEU 920/5 of April 27, 1960, reported on the status of the subject programs as of that date. During the two years since that report, progress in the various programs has been made as described below. The advice and guidance of the Advisory Committee for Standard Reference Materials and Methods of Measurement has been of material benefit in all these programs.

1. U-235 Isotopic Standards
The series of 15 uranium isotopic standards which became available from the National Bureau of Standards in 1958 have continued to receive favorable acceptance throughout the atomic energy industry both domestic and foreign. Representatives of the United Kingdom Atomic Energy Authority have discussed the development of these standards with representatives of the Division of Nuclear Materials Management and the National Bureau of Standards to obtain information and guidance in the development of their own standards.

To date these standards have been distributed with provisional certification. NBS has not had adequate facilities from a health and safety standpoint to complete the original program of blending the primary and secondary generating standards to establish final values and limits of error for the standards being distributed. New laboratory facilities have been installed and it is expected that final certification will be complete by January 1963.

In addition to the original series of 15 standards a new standard having a U-235/U-238 ratio of 1:1 was found to be needed. This standard is currently in preparation by the Union Carbide Nuclear Company and will be added to the series in the near future.

AEC costs (to the nearest $1000) for U-235 standards program during the past two years (FY 1961 and FY 1962) have been those incurred at NBS for standards development and certification, and for the new laboratory facility for handling uranium standards. These costs were as follows:

FY 1961 -	Operating Costs	$107,000
	Laboratory Facility	30,000
	Final Cost of Mass spectrometer purchased in FY 1960	25,000
FY 1962 -	Operating Costs (budgeted)	85,000
	Laboratory Facility	32,000
FY 1963 -	Approved Operating Budget	44,000

It is expected that after FY 1963 NBS will carry costs of this work in their own budget without the use of AEC funds.

2. Plutonium Chemical Standards

The preparation and packaging of a plutonium metal chemical standard by LASL as noted in AEC 920/5 has been completed. The AEC and NBS announced the availability of this standard from NBS effective April 16, 1962. The standard is in the form of plutonium metal in approximately 0.5 gram pieces sealed in glass. Development costs for this standard were absorbed by LASL. Material and packaging costs will be recovered through charges for the standards.

While the metal plutonium standard is satisfactory, it is difficult to use except in the 0.5 gram increments. Some other compound more easily subdivided into smaller amounts would be desirable either as a primary standard or as a working standard. There has been some development work done on two compounds which show promise as such a standard. These are plutonium sulfate tetrahydrate as developed at NBL and dicesium

plutonium hexachloride as developed at the Dow Chemical Company's Rocky Flats Plant. Data on the preparation and stability of these compounds is being reviewed to determine whether either compound is suitable as an analytical standard and if so what additional steps are needed to establish one or the other compound as a primary standard or working standard.

3. U-235 Content of Natural Uranium
Current data indicate that the present value of 0.7115 weight percent for the U-235 content of natural uranium is not correct. Representatives of the Division of Nuclear Materials Management have discussed this situation with representatives of the United Kingdom Atomic Energy Authority, the National Bureau of Standards, and the Union Carbide Nuclear Company, all of which have data indicating the 0.7115 value to be incorrect. It now appears that a value of 0.7105 would be the best value based on current data. Review of all the current data is in process and it is expected that a new value will be recommended for adoption by the USAEC and the UKAEA with a target date of January 1, 1963.

4. U-236 Isotopic Standards
AEC 920/5 indicated action had been taken to provide a U-236 isotopic standard. Material containing about 8.77% U-236 has been set aside to be used by NBS as such a standard. Arrangements have been made for calutron separation of relatively pure U-236 isotopes to be used by NBS to certify the 8.77% material. This separation is now in process.

5. Plutonium Isotopic Standard
AEC 920/5 stated that DNMM was reviewing the need for plutonium isotopic standards; that need has now been established. DNMM, through the Division of Research, will arrange for the calutron separation by the Oak Ridge National Laboratory of pure plu-

tonium isotopes to be used as primary standards for standardization and certification of various plutonium isotopic standards. Still to be determined is the isotopic composition of the standards to be certified. Development costs for this standard are estimated to be about $75,000. Materials and packaging costs will be recovered through the charges for the standard.

6. Selected Measurement Methods

AEC 920/5 indicated that a program for publication of AEC Recommended Measurement Methods had been initiated. It has been decided to publish these methods as selected methods under the title "Selected Measurement Methods for Uranium and Plutonium in the Nuclear Fuel Cycle". About two-thirds of this publication has been edited and circulated for final approval to the members of the Seminars which were responsible for the initial selection of the methods. Editing and review of the remainder of the methods is expected to be completed within the current calendar year.

During the process of selecting and editing the methods to be published a representative of DNMM has coordinated this work with similar work being carried out by committees of the American Society for Testing Materials and the American Standards Association.

A subcommittee of the ASTM E-10 committee is preparing a monograph for determination of burn-up in reactor fuel. Two of the methods to be used in the monograph are the same as those to be included in the aforementioned book.

The American Standards Association Sectional Committee N5 on Nuclear Fuel Cycle Engineering is preparing an American Standard for "Accountability Measurements of Source and Special Nuclear Materials in a Chemical Reprocessing Plant". The ASA standard will use several of the methods to be published in the AEC book. However, the ASA, unlike the ASTM, will use the methods by reference to the AEC book.

Members of the ASA committee have reviewed the AEC methods to be published and offered many worthwhile comments. Also, a DNMM staff member was designated as an official AEC representative to the ASA. This representative has participated in the development of the ASA standard noted above and has provided the ASA with the comments of other interested AEC Offices and Divisions regarding this standard.

Costs for the AEC program for Selected Measurement Methods consist of personnel and travel costs and have been absorbed by the various AEC contractors and private companies whose employees have participated in the programs.

Minerals - 7 - Analysis + Tests

REC 920/5

UNCLASSIFIED

April 27, 1960

AEC 920/5

COPY NO. 103

ATOMIC ENERGY COMMISSION

STATUS OF THE PROGRAM FOR STANDARD REFERENCE MATERIALS AND RECOMMENDED MEASUREMENT METHODS

Note by the Secretary

The General Manager has requested that the attached report by the Acting Director of Nuclear Materials Management be circulated for the information of the Commission.

W. B. McCool
Secretary

DISTRIBUTION	COPY NO.	DISTRIBUTION	COPY NO.
Secretary	1	Office of Plans	65
Commissioners	2 - 6	Operations Analysis	66
General Manager	7	Production	67 - 68
Deputy Gen. Mgr.	8	Raw Materials	69 - 70
Asst. Gen. Mgr.	9 - 10	Reactor Development	71 - 76
Asst. Gen. Mgr. IA	11	Research	77
Asst. Gen. Mgr. Mfg.	12	Security	78
Asst. Gen. Mgr. R&S	13	Special Projects	79
Asst. Gen. Mgr. R&ID	14	Albuquerque Oprns.	80 - 82
Asst. Gen. Mgr. Adm.	15	Chicago Operations	83 - 84
General Counsel	16 - 19	Grand Junction Oprns.	85
Biology & Medicine	20	Hanford Operations	86
Classification	21	Idaho Operations	87
Finance	22 - 24	Lockland Aircraft Oprns.	88 - 89
Isotope Development	25	New York Operations	90
Industrial Relations	26 - 27	Oak Ridge Operations	91 - 93
Information	28 - 29	Pittsburgh Naval Oprns.	94 - 95
Inspection	30	San Francisco Oprns	96
Intelligence	31	Savannah River Oprns	97 - 98
International Affairs	32 - 35	Schenectady Oprns.	99
Licensing & Regulation	36 - 37	D. C. Office	100 - 102
Military Application	38	Secretariat	103 - 107
Nuclear Materials Mgmt.	39 - 64		

42200

UNCLASSIFIED

ATOMIC ENERGY COMMISSION

STATUS OF THE PROGRAM FOR STANDARD REFERENCE MATERIALS AND RECOMMENDED MEASUREMENT METHODS

Report to the General Manager by the Acting Director of the Division of Nuclear Materials Management

1. The Division of Nuclear Materials Management (DNMM), by means of General Manager approval of AEC 920/2 on June 20, 1957, established a program to provide chemical and isotopic standard reference materials of special importance to atomic energy activities and recommended measurement methods associated with such materials. Commission approval of AEC 920/3 at Meeting 1324 on January 8, 1958 established the Advisory Committee for Standard Reference Materials and Methods of Measurement (Advisory Committee) to supersede the Committee for Uranium Isotopic Standards and provide technical advice to the AEC for the program established by AEC 920/2.

2. Since the inception of these programs late in FY 1956, actual and estimated expenditures through FY 1960 amount to approximately 1.2 million dollars. Details may be found in the appendix.

3. Through March 1959, the Union Carbide Nuclear Company delivered to the National Bureau of Standards (NBS), for certification and distribution as uranium isotopic standards, fifteen 1 kg. lots of uranium, as U_3O_8, having isotopic compositions ranging from 0.5 weight per cent U-235 to slightly greater than 93 weight per cent U-235.

4. The AEC and NBS announced jointly that the first ten of the series of fifteen isotopic standards, as well as a normal uranium chemical standard prepared by the AEC New Brunswick Laboratory (NBL), were available October 1, 1958 from NBS. The

remaining isotopic standards were available by the end of May 1959. Since the initial availability of these standards was announced, an average of 20 isotopic standards and 30 chemical standards per month has been sold or leased to domestic private industry and to foreign governments.

5. In addition to the standards noted above, one ton of primary mineral, Belgian Congo Pitchblende, and samples of uranium-bearing ore from other areas of the world have been obtained for studies at NBS which will lead to preparation, certification, and distribution of a natural uranium isotopic standard.

6. With increasing quantities of the U-236 isotope resulting from reactor irradiation, several sites have expressed a need for U-236 isotopic standards. DNMM has taken action to provide these standards.

7. A booklet entitled, "The Use of Uranium Standards In Isotopic Analysis" is being prepared to enable users of the various uranium isotopic standards now available and to be made available in the future to obtain the maximum information from a minimum quantity of standard reference material.

8. NBL in cooperation with LASL has initiated studies to develop and evaluate methods for high precision plutonium analysis and methods for analysis of very low impurity levels in plutonium and to evaluate the suitability of various plutonium compounds for use as standard reference material. A plutonium facility has been constructed at NBL to carry out these studies.

9. At the request of the DNMM, LASL has undertaken preparation and packaging of plutonium metal as interim chemical standards. Also, DNMM is reviewing need for plutonium isotopic standards.

10. Some need has been indicated for lithium isotopic standards. The AEC now has about 35 grams each of Li^6 and Li^7

having isotopic purity of 99.999% set aside for possible use by NBS as primary standard material. The AEC will assist NBS in this project by supplying, on a full cost recovery basis, such materials as may be available at AEC sites.

11. Under AEC 920/2 the Director, DNMM initiated a program which will provide AEC Recommended Measurement Methods.* These methods will be published as recommended methods for materials being transferred between the AEC and private industry or foreign governments. Initially, the methods published will be for the chemical and isotopic determination of plutonium and uranium.

* Reports concerning this program are available from DNMM

UNCLASSIFIED

APPENDIX

Expenditures for Standards and Measurements Program
(Values are rounded to the nearest $1,000)

Fiscal Year		Operating Expenses	Capital Expenses
1957	National Bureau of Standards -	$ 20,000	--
1958	New Brunswick Laboratory -	28,000	--
	Union Carbide Nuclear Co. -	17,000 (1)	--
	National Bureau of Standards -	90,000	156,000 (2)
1959	New Brunswick Laboratory -	139,000	182,000 (3)
	Goodyear Atomic Corporation -	1,000 (1)	--
	Mallinckrodt Chemical Works -	3,000 (1)	--
	National Lead Company -	2,000 (1)	--
	Union Carbide Nuclear Co. -	13,000 (1)	--
	Argonne National Laboratory -	6,000 (1)	--
	National Bureau of Standards -	101,000	--
1960	New Brunswick Laboratory -	110,000	54,000 (4)
	Los Alamos Scientific Lab.	12,000	--
	National Bureau of Standards -	114,000	114,000 (2)
	Total -	$686,000	$506,000

(1) These costs were involved in preparation and evaluation of isotopic and chemical standard reference materials and are reflected in the charges made when the standards are sold or leased.

(2) These costs are for purchase of mass spectrometers and subsequent modifications of same to permit their use in the program.

(3) This figure includes $113,000 for the plutonium facility constructed at NBL and $69,000 for payments on a mass spectrometer.

(4) This figure includes final payments on a mass spectrometer and air conditioning of the plutonium facility.

STANDARD FORM NO. 64

Office Memorandum • UNITED STATES GOVERNMENT

TO : Managers of Operations Offices
Heads of Divisions and Offices, Headquarters

DATE: OCT 7 1959

FROM : Donald F. Musser, Director DFM
Division of Nuclear Materials Management

SUBJECT: DISTRIBUTION OF STANDARD SS MATERIALS BY THE NATIONAL BUREAU OF STANDARDS

SYMBOL: NMM:RJJ

Through a misunderstanding the price list attached to our memorandum of September 29, 1958, subject as above, contained the incorrect price for the natural uranium chemical standard. The correct price is $5.00 for a 25 gram sample instead of the $18.60 listed.

Materials 7

U. S. ATOMIC ENERGY COMMISSION NATIONAL BUREAU OF STANDARDS

Washington 25, D. C.

No. A-258
Tel. HAzelwood 7-7831
Ext. 3446

FOR IMMEDIATE RELEASE
(Thursday, October 2, 1958)

URANIUM ISOTOPIC STANDARDS NOW AVAILABLE UNDER AEC-NBS COOPERATIVE PROGRAM

The National Bureau of Standards in cooperation with the Atomic Energy Commission has prepared the first of a series of uranium isotopic standards for use by educational and research institutions and industry in the United States and abroad.

Ten standard uranium isotopic samples became available from the Bureau on October 1, 1958. Five additional uranium standards are in preparation to complete a series of fifteen.

Standards for other atomic energy materials such as plutonium and thorium will be made available under a continuing program intended to provide materials of known certified composition which will be universally acceptable as analytical standards.

Development of standard materials of accurately known composition on which to base measurements with a high degree of precision and accuracy has long been a major interest to users of atomic energy materials. Over a period of years various Commission laboratories and Commission contractors have studied and developed standard materials for their own use. The considerable expansion in recent years in the uses of atomic energy has underlined the need for standard materials which will be widely accepted. To meet this demand the Commission, with the aid of committees drawn from industry, has cooperated with the Bureau of Standards to establish a continuing program to provide the needed standard materials.

(more)

The uranium isotopic standards become a part of the Bureau's standard samples program involving some 600 certified standard materials which are available to science and industry.

The ten standards which became available from NBS on October 1 represent the first results of the AEC-NBS cooperative program. These will be at levels (weight per cent U-235) of 0.5, 1, 1.5, 2, 3, 5, 20, 85, 90, and 93. The five additional standards to be made available later will be at levels of 10, 15, 35, 75, and 80. A natural uranium chemical standard, available October 1, will round out the uranium series.

Each isotopic standard issue unit will consist of a quantity of uranium oxide (U_3O_8) equivalent to one gram of uranium. The chemical standard issue unit will consist of 25 grams of uranium oxide. Charges will vary from about $18 to about $40 per issue unit depending on the enrichment level. A list of charges for the standards will be available from the National Bureau of Standards.

Initially, provisional certification values will be provided with the standards. Final certification will follow when evaluation work now underway is completed. The U-234, U-236 and U-238 contents of the standards will also be shown on the certificate of analysis.

Standards supplied by NBS will be available to the Commission's contractors and licensees, and to foreign governments having appropriate agreements for cooperation with the United States. Licensees are authorized to receive only those standards of the enrichment for which they are licensed. Licenses may be obtained through the Division of Licensing and Regulation, U. S. Atomic Energy Commission, Washington 25, D. C.

Order forms for domestic use (AEC contractors and licensees) may be obtained from the National Bureau of Standards, Washington 25, D. C. Orders from foreign sources should be submitted to the Division of International Affairs, U. S. Atomic Energy Commission, Washington 25, D. C.

- 30 -

10258

STANDARD FORM NO. 64

Office Memorandum • UNITED STATES GOVERNMENT

TO : Managers of Operations Offices
Heads of Divisions and Offices, Headquarters

DATE: SEP 2 9 1958

FROM : Donald F. Musser, Director DFM
Division of Nuclear Materials Management

SUBJECT: DISTRIBUTION OF STANDARD SS MATERIALS BY THE NATIONAL BUREAU OF STANDARDS

SYMBOL: NMM:RJJ

On October 1, 1958 the National Bureau of Standards will have available for distribution ten uranium isotopic standards, provisionally certified, and a natural uranium chemical standard in the form of U_3O_8. The enrichment levels and costs are attached. Issue units will be one gram U for the isotopic standards and 25 grams U_3O_8 for the chemical standard. Reorder quantities will be limited at the discretion of the National Bureau of Standards.

Contractors, i.e., SS stations, may obtain these standards by means of an order form obtained from NBS. The provisions of the AEC Manual Chapter 7450 concerning forecasting, authorization and nuclear materials drafts will not apply to these standards.

Standards issued to contractors will be removed from AEC inventory by NBS at the time of issue. Consequently, transfer of the standards will not be made on Form AEC 101 and contractors should not include the standards in their SS materials inventory.

The NBS will also distribute standard SS materials to licensees on the basis of 100% deposit on the value of contained SS material which is included in the attached table of costs. Licensees may obtain further information from the Division of Licensing and Regulation.

Distribution to foreign governments will be handled through the Division of International Affairs. All requests from foreign sources should be referred to DIA.

Attachment:
Price List

D-2-4

Standard Reference Materials

Price List

Nominal Weight Percent U-235		Total Cost (1)
0.5	(2)	20.35
1	(2)	20.40
1.5	(2)	20.50
2	(2)	20.55
3	(2)	20.70
5	(2)	21.05
10		21.85
15		22.70
20	(2)	23.55
35		26.35
75		33.30
80		34.20
85	(2)	35.05
90	(2)	35.95
93	(2)	37.55
Natural (Chemical Standard) (2)		18.60

(1) Cost is given per issue unit, i.e. 1 gram contained uranium for isotopic standards and 25 grams U_3O_8 for the chemical standard.

(2) These standards to be available October 1, 1958. Others listed will be available in the near future.