UNCLASSIFIED

NAA-SR-MEMO-1946
(Addendum 2)
Copy 38 of 100
27 Pages
SERIES A

[redacted]

OSTI
INV
89

DO NOT PHOTOSTAT

SPECIAL PURPOSE POWER PLANT
CRITICAL FACILITY
SUMMARY HAZARDS REPORT

(Addendum 2)

SNAP II

This document is
PUBLICLY RELEASABLE
Authorizing Official
Date: 1-29-09

[redacted]

[redacted]

DEPARTMENT OF ENERGY DECLASSIFICATION REVIEW

1st REVIEW DATE: 6-19-97
AUTHORITY: ☐ ADC ☐ ADC ☒ ADD
NAME: Jerry E. Kaiser
2ND REVIEW DATE: 6-19-97
AUTHORITY: ADD
NAME: Ted Dowd

DETERMINATION (CIRCLE NUMBER(S))
1. CLASSIFICATION RETAINED
2. CLASSIFICATION CHANGED TO
3. CONTAINS NO DOE CLASSIFIED INFO
4. COORDINATE WITH:
5. CLASSIFICATION CANCELED
6. CLASSIFIED INFO BRACKETED
7. OTHER (SPECIFY):

ATOMICS INTERNATIONAL
A DIVISION OF NORTH AMERICAN AVIATION, INC.

1 553

UNCLASSIFIED

[redacted]

DISCLAIMER

This report was prepared as an account of work sponsored by an agency of the United States Government. Neither the United States Government nor any agency Thereof, nor any of their employees, makes any warranty, express or implied, or assumes any legal liability or responsibility for the accuracy, completeness, or usefulness of any information, apparatus, product, or process disclosed, or represents that its use would not infringe privately owned rights. Reference herein to any specific commercial product, process, or service by trade name, trademark, manufacturer, or otherwise does not necessarily constitute or imply its endorsement, recommendation, or favoring by the United States Government or any agency thereof. The views and opinions of authors expressed herein do not necessarily state or reflect those of the United States Government or any agency thereof.

DISCLAIMER

Portions of this document may be illegible in electronic image products. Images are produced from the best available original document.

[redacted]

UNCLASSIFIED

NAA-SR-MEMO-1946
(Addendum 2)

SPECIAL PURPOSE POWER PLANT CRITICAL FACILITY SUMMARY HAZARDS REPORT

(Addendum 2)

A. W. THIELE

with contributions by

Compact Power Plant Group

ATOMICS INTERNATIONAL

A DIVISION OF NORTH AMERICAN AVIATION, INC.
P.O. BOX 309 CANOGA PARK, CALIFORNIA

CONTRACT AT(11-1)-GEN-8
ISSUED: March 11, 1959

UNCLASSIFIED

[redacted]

[redacted]

UNCLASSIFIED

NAA SR-MEMO-1946
(Addendum 2)

SUPPLEMENT TO SUMMARY HAZARDS REPORT

CRITICAL EXPERIMENTS WITH SNAP EXPERIMENTAL REACTOR

I. INTRODUCTION AND SUMMARY

1.1 General Information

1.2 Site Information

1.3 Critical Facility Building

1.4 Critical Assembly

1.5 Operation

1.6 Radiological Safety

1.7 Nuclear Radiation and Thermal Analysis

1.8 Material Hazards Analysis

1.9 Summary Accident Analysis

II. CRITICAL ASSEMBLY

2.1 General

2.2 Core

2.3 Reflector and Controls

2.4 Structure

2.5 Instrumentation

III. OPERATION

IV. NUCLEAR ANALYSIS

V. SUMMARY ACCIDENT ANALYSIS

UNCLASSIFIED

[redacted]

FORM 81 L-1 REV. 2 54

I. INTRODUCTION AND SUMMARY

1.1 General Information

The SNAP Experimental Reactor (SER) is a small power reactor that will be operated as part of the SNAP II program to gather information about the performance of fuel elements and other reactor components. The initial assembly of this reactor will be done in the SNAP II critical facility described in an earlier hazards report[1], with Addendum 1[2], to which this report constitutes Addendum 2. It will be noted that paragraph numbers in this section correspond to identical paragraphs in the original report. The assembly of the reactor in this facility will permit zero power experiments and adjustments with the unirradiated system that would be difficult and time-consuming in the SER power test pit.

The critical facility now houses a critical assembly that has provided the basic data for the design of this reactor. During the course of the experiments with the SER the initial critical assembly (hereinafter referred to as the SNAP II critical assembly) will be dismantled and its instruments and safety circuits used with the SER core. The present instrumentation has performed in a satisfactory manner and is easily adapted to the new assembly.

The SER core consists of a cluster of sixty-one, one-inch diameter fuel rods arrayed in a close triangular lattice. The liquid metal coolant that flows between the rods in the final assembly will be omitted during the critical experiments. A beryllium reflector provides reactivity control elements with rotating cylindrical sections and safety elements with fall-away reflector sections.

The experiments planned for this assembly include critical loading for several reflector thicknesses, the effect of coolant as mocked-up with aluminum, the strength of the control elements, the uniform temperature coefficient and other related physical parameters similar to those that have been measured on the powder compact critical assembly. The SER core will be available for critical experiments about April, 1959 and will be so engaged for about two months, after which it will be placed into power operation.

1.2 Site Information

The basic features of the critical facility site given in the earlier hazards report[1] remain unchanged. The density of buildings and the corresponding number of personnel in the region of 2000 ft. radius have increased since the report was prepared. Building locations are shown in Figure 1. There is a maximum of 350 persons in the Burro Flats area on a single shift. One additional critical facility housing the OMR and SGR critical assemblies, will soon be in operation about ½ mile from this facility.

1.3 Critical Facility Building

The building will not be changed by the operation of the SER critical experiments. As is shown in Figure 11, the new assembly will be slightly closer to the control room shield wall which will give an increase in the shield effectiveness as the sky shine was the predominant radiation source.

1.4 Critical Assembly

The SER core is composed of rods of uranium-zirconium alloy, massively hydrided, and clad to form fuel elements. The fuel

elements are end supported to form a hexagonal cylinder that is enclosed by a circular beryllium reflector. The end reflector consists of short pieces of beryllium rod placed at each end of the fuel rod.

Control is provided by three control drums in the form of segments of cylinders that rotate in such a manner as to increase or decrease the amount of reflector close to the reactor. Shutdown is accomplished by permitting the three sectors of reflector between the control drums to fall away from the core under gravity. The safety elements provide 10% $\frac{\Delta k}{k}$ control within .06 seconds after these magnets are released.

1.5 Operation

The general operating procedures will be the same as for the SNAP critical assembly[1]. The facility is currently being operated with a staff of four, the Responsible Engineer, two additional engineers, and a technician. A health physicist works part-time with the project.

1.6 Radiological Safety

The operating procedures in current practice have resulted in low radiation exposure to personnel. The greatest potential hazard has been in the spread of contamination from the powder compact fuel blocks. The cladding and the metallic nature of the SER fuel to be used will eliminate this hazard. There will be no inventory of fission products in the assembly.

1.7 Nuclear, Radiation, and Thermal Analysis

The analysis of the SER shows that its nuclear performance is quite similar to the SNAP critical assembly. The basic changes involve the use of massively hydrided alloy fuel rather than powder compact blocks and cylindrical rather than spherical geometry.

The shielding calculations given in the previous hazards report have been experimentally verified. The previous results indicated that over 90% of the radiation in the control room was due to sky shine. The placement of the SER critical assembly closer to the control room shield wall will reduce the sky shine component because of the larger scattering angle. For the purposes of the discussion on accidents the former shield calculations will be used.

1.8 Material Hazards Analysis

The previous report presented an analysis of the hazards peculiar to the fuel used in this reactor. A discussion of the fuel moderator material is given in SER Site, System, and Facility Description(3).

1.9 Summary Accident Analysis

The SER has been analyzed for its behavior during a reactivity step type nuclear accident. Under the case of a one dollar step as postulated in the previous hazard report, an excursion with an integrated energy release of less than 6 megawatt seconds is indicated. The resultant energy release as a function of reactivity step input is a smooth function up through five dollars which results in a 43.7 mw-sec burst.

A nuclear accident of this sort must be predicated on an accidental addition of reflector in an uncontrolled manner. An error in assembly loading would be discovered during the process of making the reactor critical at a relatively low reactivity insertion rate of 1-2 cents per second.

The accident analysis predicts excursions of the same magnitude as those predicted for the SNAP critical assembly, so it may be concluded that a maximum radiation dose of 30 r would result.

II. CRITICAL ASSEMBLY

2.1 General

The SER is a fully enriched uranium-zirconium hydride fueled, beryllium reflected, liquid metal cooled power reactor. In the critical experiments the liquid metal coolant will be omitted and the core components will be essentially open to the air, as in the previous critical assembly. All of the other core components will be the same as those used in the SER.

2.2 Core

The SER core consists of a close-packed triangular array of 61, one-inch fuel rods. The arrangement is shown in Figure 2. The rods are an alloy of 7 $^{w}/_{o}$ uranium in zirconium that has been hydrided to a hydrogen content of 6.0×10^{22} atoms per cm^3. Beryllium pieces the same diameter as the fuel rods and 1½ inches long are placed at each end of the fuel rod and the assembly is clad in stainless steel or Hastelloy B. End plugs 0.5 inch thick are inserted to close the tubes and provide the alignment pins

0.25 inch long that support and position the rods in the grid plates which results in a total length of 14.5 inches. The fuel rod is shown in Figure 3. The beryllium pieces in the fuel elements form the axial reflector of the reactor. The fuel rods are positioned by grid plates which are supported by the core tank. The hexagonal array formed by the fuel rods, about 8 inches across the flats, is filled out to a cylindrical shape by beryllium reflector pieces. The NaK coolant that normally fills the spaces between the fuel rods and the upper and lower plenums (see Figure 4) will be mocked-up with aluminum for ease in handling during the critical experiments.

2.3 Reflector and Controls

Reactivity changes for control and shutdown are accomplished by reflector adjustments. The radial reflector shown in Figure 5 consists of approximately 3 inches of beryllium. The final thickness may be adjusted by adding or subtracting thin plates to achieve final adjustment on desired excess reactivity. Control is provided by three "drums", formed of cylindrical segments of the reflector that turn about axes parallel to the core as shown in Figure 6. Each of these drums will provide approximately two dollars control. During the course of the critical experiments only one of these drums will be motor driven, the other two will be set manually and clamped to prevent inadvertent changes during experiments.

Three safety elements are located in-between the control elements. Shutdown is achieved by permitting the reflector material to fall

UNCLASSIFIED

away from the core under the force of gravity. The action is shown in Figure 7. It will be noted that the safety elements are hinged about a point under the center of the core. They are brought into position by a lifting motion exerted thru their drive rods by a linear actuator type of drive motor. This linkage contains an electro-magnet which, when released, permits the elements to drop with a motion carrying them away from the core. Their fall is checked by a pneumatic shock-absorber. The shutdown reactivity control provided is shown in Figure 8. It will be noted that 10% reactivity loss occure within 60 milliseconds after release.

2.4 Structure

The SER critical assembly apparatus is mounted on a circular table, forty inches in diameter (see Figure 9). The table stands on six legs of 1½" pipe, 42 inches long, which are bolted to the floor. The core tank is hung from the table with full access to it through a hole of core size at the center of the table. The motors for driving the control and safety elements are mounted on the top of the table with their shafts extending below the table. The control drums have thrust bearings on the table and guide bearings on the bottom of the tank. The safety elements pivot on horizontal bearings on the bottom of the tank and are lifted by rods into a mechanical stop on the side of the reactor. Thebearings are of a "sleeve" type with sufficient clearance that only a line contact exists between the bearing surfaces. The tensile force developed on this contact will be more than adequate to break any possible adhesion.

UNCLASSIFIED

2.5 Instrumentation

The instrumentation of the SER critical experiment will be used in the conduction of this experiment. The present instrumentation

FORM AI L-1 REV. 2-54

consists of four fission chambers connected thru suitable amplification to short time constant counting rate meters with fixed scram trip levels, to scalers, and, selectively, to linear and logarithmic counting rate meters, the latter being connected to a period meter. Two ion chambers are in use, one connected to a linear and one to a logarithmic micro-microammeter. The linear micro-microammeter also operates a scram circuit. The four fast counting rate scram circuits and ion chamber circuit will be used to disconnect power to the electromagnet holding the safety elements and to start all motors driving out. The high counting rate and period scrams now connected as set-back type scrams will drive the actuated control element out.

Interlocks presently used with the critical facility prevent operation with shielding or exclusion area doors open and prevent entering the area when significant radiation exists or before the reactor is completely shut down. These interlocks will be maintained as described in the previous hazards report(1). Interlocks on the control circuits prevent driving the control drum in without having the safety elements up; they also prevent driving the safety elements up with the control drum in.

The safety elements are basically in-out devices and their position is indicated by appropriate lights. Approximate position is given by meter readouts which give deflection proportional to their position. The position of the control drum is read by a precision syncro-generator motor combination.

UNCLASSIFIED

III. OPERATION

Operation of the SER critical experiments will represent only slight procedural changes from those now in practice with the powder compact critical experiments. The instrumentation will be exactly the same and its checkout as well as the procedures for verification of the degree of subcriticality will follow in the same manner. The fuel inventory and the excess reactivity will be kept under careful control. During the course of these experiments the fuel inventory and other adjustments will be so controlled that the excess reactivity available to the operator will not exceed that which will cause the reactor to rise on a stable period shorter than 20 seconds.

Before nuclear experiments begin the assembly will be completely checked-out for mechanical performance. The initial experiment will be to establish a critical assembly. The reflector will be adjusted to provide the maximum thickness, about four inches. The fuel rods will be added a few at a time, as indicated by the critical extrapolation, so as to no more than double the neutron multiplication at each change in fuel loading. The method outlined in the previous report for determing the size of the loading will be followed. Near the critical point an increment of one fuel rod may result in approximately one dollar excess reactivity. When the critical extrapolation indicates that the assembly will be supercritical with the next fuel rod, fuel addition will be terminated.

UNCLASSIFIED

Subsequent experiments will consist of reducing the reflector thickness and increasing the loading in the manner described above to establish the critical loading as a function of reflector thickness. The final configuration will consist of a fully-loaded core and the amount of reflector that will give an excess reactivity within the prescribed limits.

FORM 81 L-1 REV. 2 54

Experiments will then be conducted to calibrate the control and safety devices, to measure the reactivity coefficient of coolant and other possible core and reflector materials, and to measure the temperature coefficient, neutron lifetime, and similar parameters. The final experiment will be to adjust the excess reactivity by means of small increases in the reflector thickness to provide the 4% excess needed for operation of the SER at power. This reactivity will be compensated by resetting the two fixed control drums.

The detailed procedure in these experiments will be reviewed by the existing Reactor Hazards Review Committee set up within Atomics International for this purpose. The members of the committee are selected for their ability to review the experiments for their technical soundness and safety and consists of a majority of members who are dissociated with the development project in order to maintain an independent viewpoint. This committee has been operating for the past year and reviews each nuclear experiment before approval is given. The committee is responsible directly to the Chief of Reactor Development.

IV. NUCLEAR ANALYSIS

4.1 Reactor Physics

The physical parameters of the SER core are very similar to those of the SNAP critical assembly. A complete discussion of the physics analysis of the SER is contained in Reference 5. In both assemblies the core materials are zirconium, hydrogen, and uranium enriched to 93% U^{235}. The composition of the SER fuel will be as follows:

Hydrogen:	6.0×10^{22} atoms/cm^3
Zirconium:	3.5×10^{22} atoms/cm^3
Uranium^{235}:	$.10 \times 10^{22}$ atoms/cm^3

UNCLASSIFIED

The k_{eff} of the core, fully-loaded, with 3 inches of beryllium reflector, cold, clean and wet, has been calculated to be 1.065. A multigroup diffusion theory code was used for the calculation and the results normalized by the ratio of the experimental to the theoretical results of the SNAP critical experiments. The fully-loaded core will have 2.9 kg of U^{235} and up to 3 inches of beryllium available as radial reflector. The calculations include the fuel cladding of .01 inches of stainless steel and the NaK coolant, but do not include certain ceramic coatings that might be applied. The NaK will not be present during the critical experiments, but will be mocked-up with aluminum.

Three inches of beryllium will be available to provide adjustment of the reactivity. A minimum amount of excess reactivity will be used during the experiments in accordance with the operating procedure.

As in the SNAP critical facility the bound nature of the hydrogen atoms in the zirconium hydride crystal lattice has marked effect on the temperature coefficient. The hydrogen atom assumes quantized oscillator levels with 0.13 ev spacing, the population of these levels being characterized by a Boltzmann distribution. Theoretical analyses of the reactivity change accompanying the neutron energy change caused by heating the fuel have been checked with experiments on the critical assembly and lead to a prompt temperature coefficient for the reactor of $2.10^{-5}/°C$ at room temperature. This value becomes more negative with increasing

UNCLASSIFIED

FORM 81 L-1 REV 2 54

UNCLASSIFIED

temperature as discussed by Cohen and Vaughan[4]. Calculations indicate an additional temperature coefficient of $-1.18 \times 10^{-5}/°C$ due to heating expansion effects in the SER. The prompt neutron lifetime of the SNAP critical assembly has been measured and found to be 14 ± 2 microseconds as opposed to 11.5 μsec calculated. By virtue of the similar core materials the SER lifetime should be quite close to this value; calculations yield 12 microseconds.

4.2 Shielding

An analysis of the shielding of the critical cell was presented in the previous report. Subsequent measurements to confirm these calculations have given agreement within the limits of experimental error, about 20%. The SER critical machine will be located slightly closer to the shield wall separating the cell from the control room. As the neutron sky shine is the dominant radiation in this direction its effect will be reduced by virtue of the larger scattering angle. In the direction opposite the control room, direct penetration of the wall is the larger effect. However, the protection in that direction will not be compromised by repositioning the critical assembly. On this basis it is assumed that it would be conservative to assume the validity of the previous shielding calculations.

Operation of the present critical assembly results in exposures of less than 10 mrem in an average week because of the low-power and short duty cycle in combination with the adequacy of the shielding. The reactor is critical or supercritical for about ten or twenty minutes in a typical operating day.

UNCLASSIFIED

FORM 81 L-1 REV 2 54

UNCLASSIFIED

4.3 Nuclear Accident

The behavior of the SER following a step input of reactivity has been studied using an analog model modified for the conditions existing in the critical experiment. The total energy release as a function of the step input is given in Figure 10. The results do not indicate any significant discontinuities over the range of input reactivities considered. Step insertions ranging from 2 to 5 dollars will release 18 to 45 mw-sec respectively. The transients will be shut down by means of temperature coefficient alone, as hydrogen loss is negligible. The calculations conservatively use a temperature coefficient of $-1.5 \times 10^{-5}/°C$ and a lifetime of 10 microseconds. The energy release is independent of the lifetime over the range of a factor of two. The average fuel temperature reaches 1200°F for a two dollar insertion and 2900°F for a five dollar insertion. The melting point of the alloy is about 300 degrees above the latter temperature with hydriding tending to increase the value. The loss of hydrogen was simulated beginning at 1700°F, but the amount released during the transient did not contribute significantly to the shutdown due to the short duration of the excursion.

In the previous hazards report a nominal energy release of 15 mw-seconds was assumed in the accident calculations. Under the pessimistic assumptions of $-1.5(10)^{-5}/°C$ for a temperature coefficient, an input of $1.75 is necessary to produce this energy release. The results indicate that the SER will be at least as safe as the SNAP critical assembly. This study has included reactivity inputs considerably higher than in the previous study in order that any marginal effects might be detected.

UNCLASSIFIED

FORM 81 L-1 REV. 2 54

UNCLASSIFIED

V. SUMMARY HAZARD ANALYSIS

The similarity of the SER critical assembly to the SNAP critical assembly has been shown in the foregoing analysis. In the previous report it has been shown that the hazard to personnel from a nuclear accident was not unreasonable. The methods of initiation of an accident will be of the same nature also. The small size of the core with the high neutron leakage makes the assembly quite sensitive to reflector material as a potential accident mechanism.

The stand supporting the core forms a cage which will provide a very good measure of protection from accidental addition of solid material. A coger over the top of the core tank together with the vertical walls of the side will prevent the accumulation of a significant amount of liquid reflector without flooding the critical assembly cell. No reasonable mechanism has been postulated that allows the addition of the amount of water needed for flooding the cell (about 10 tons of water) in a short period of time. Persons standing around the machine will not contribute significant amounts of reactivity. With the safety elements out a flooded core has a k of .96.

The existing protective measures against sabotage and the strict inventory of reactivity conditions in the reactor will remain in effect.

REFERENCES:

(1) Special Purpose Power Plant Critical Facility Summary Hazards Report - NAA-SR-MEMO-1946

(2) Special Purpose Power Plant Critical Facility Summary Hazards Report - NAA-SR-MEMO-1946 (Addendum 1)

(3) SER Site, System, and Facility Description - NAA-SR-MEMO-2956

(4) E.R. Cohen and E. Vaughan - "Neutron Slowing Down in Crystalline Moderators - NAA-SR-3376 & 3377

(5) L.A. Wilson - "SNAP Experimental Reactor Physics Analysis" - NAA-SR-3607

UNCLASSIFIED

FORM 81 L-1 REV 2 54

UNCLASSIFIED

UNCLASSIFIED

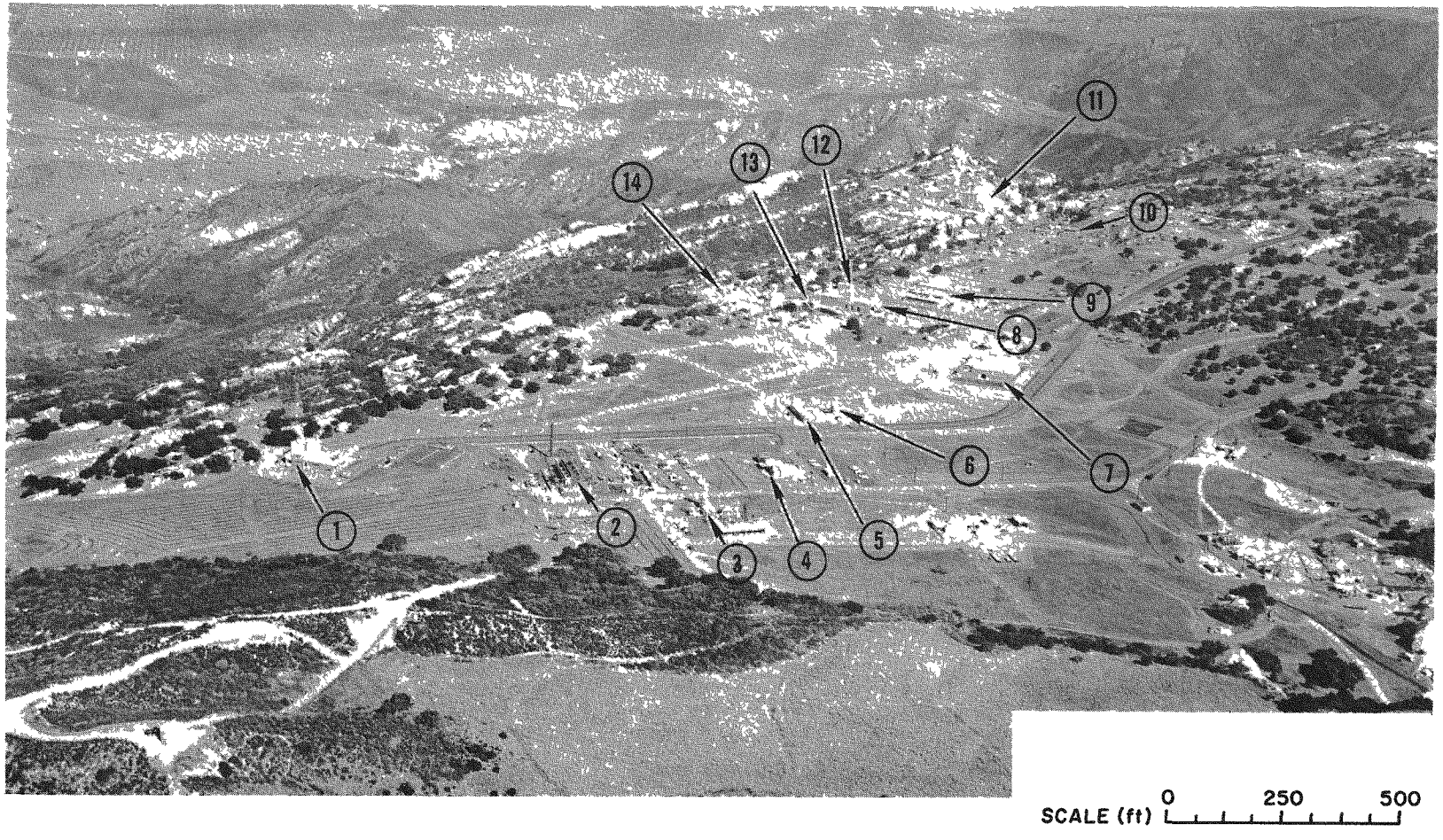

1. OMR Critical Facility
2. Hot Cells
3. Organic Component Test Tower
4. SNAP Critical Facility
5. Sodium Instrumentation Building
6. Sodium Instrumentation Tower
7. Warehouse and Support
8. Sodium Laboratory
9. Organic Laboratory
10. Experimental Neutron Physics Reactor Building
11. Sodium Reactor Experiment (SRE)
12. Control Element Test Structure
13. Large Components Test Loop and Tower
14. SNAP Experimental Reactor (SER)

Fig. 1. Burro Flats

UNCLASSIFIED

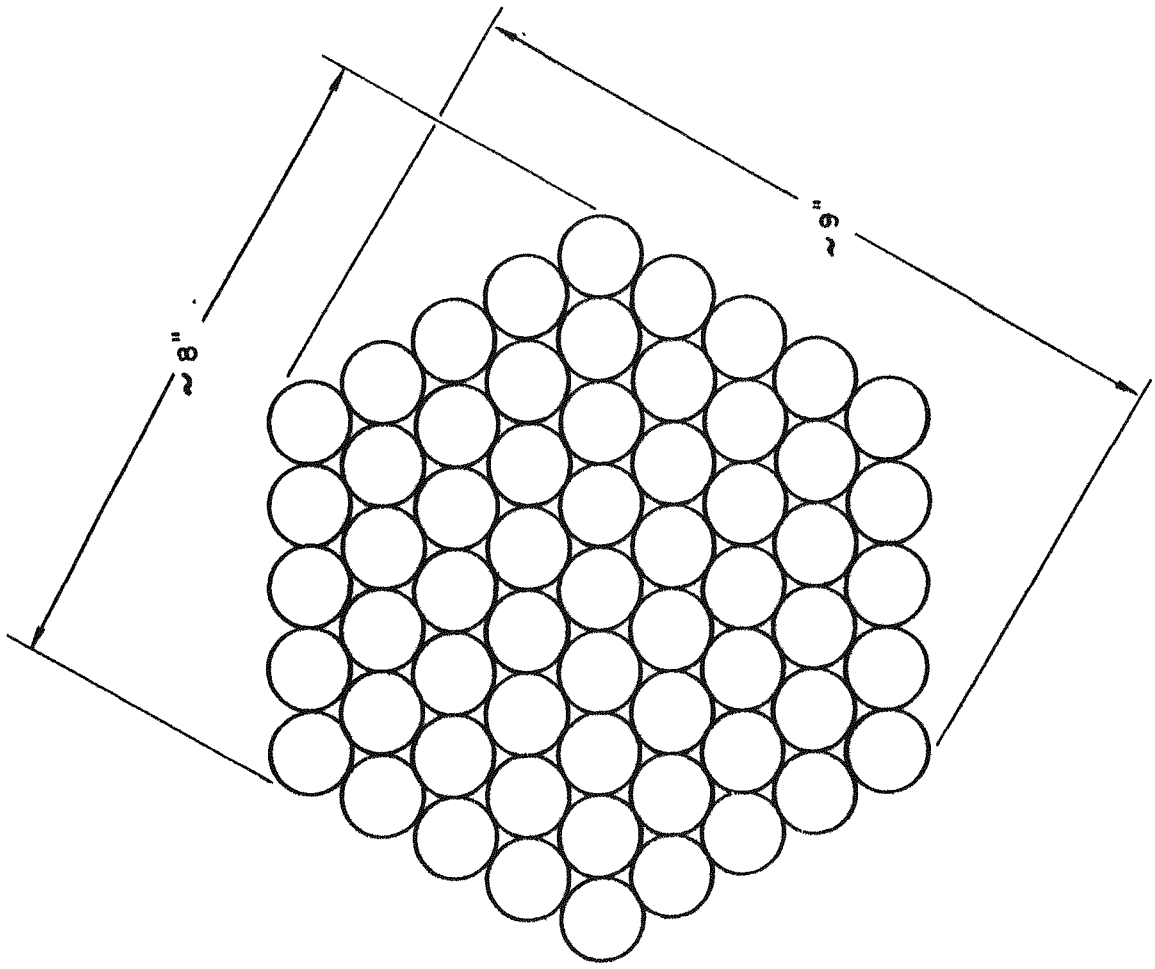

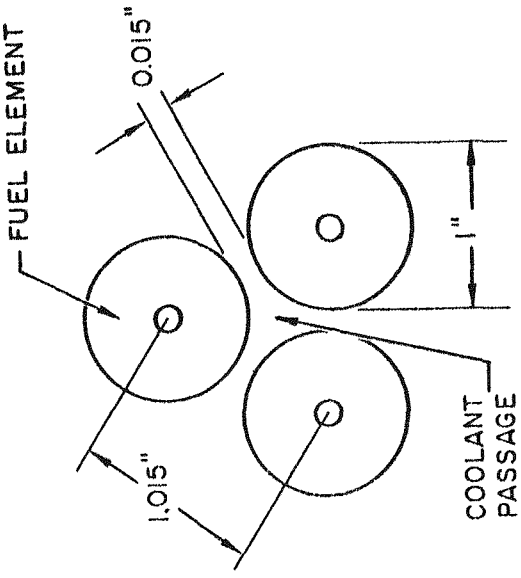

Figure 2. Fuel Element Matrix

UNCLASSIFIED

[redacted]
NAA-SR-MEMO-1946
(Addendum 2)
Page 17 of 25

UNCLASSIFIED

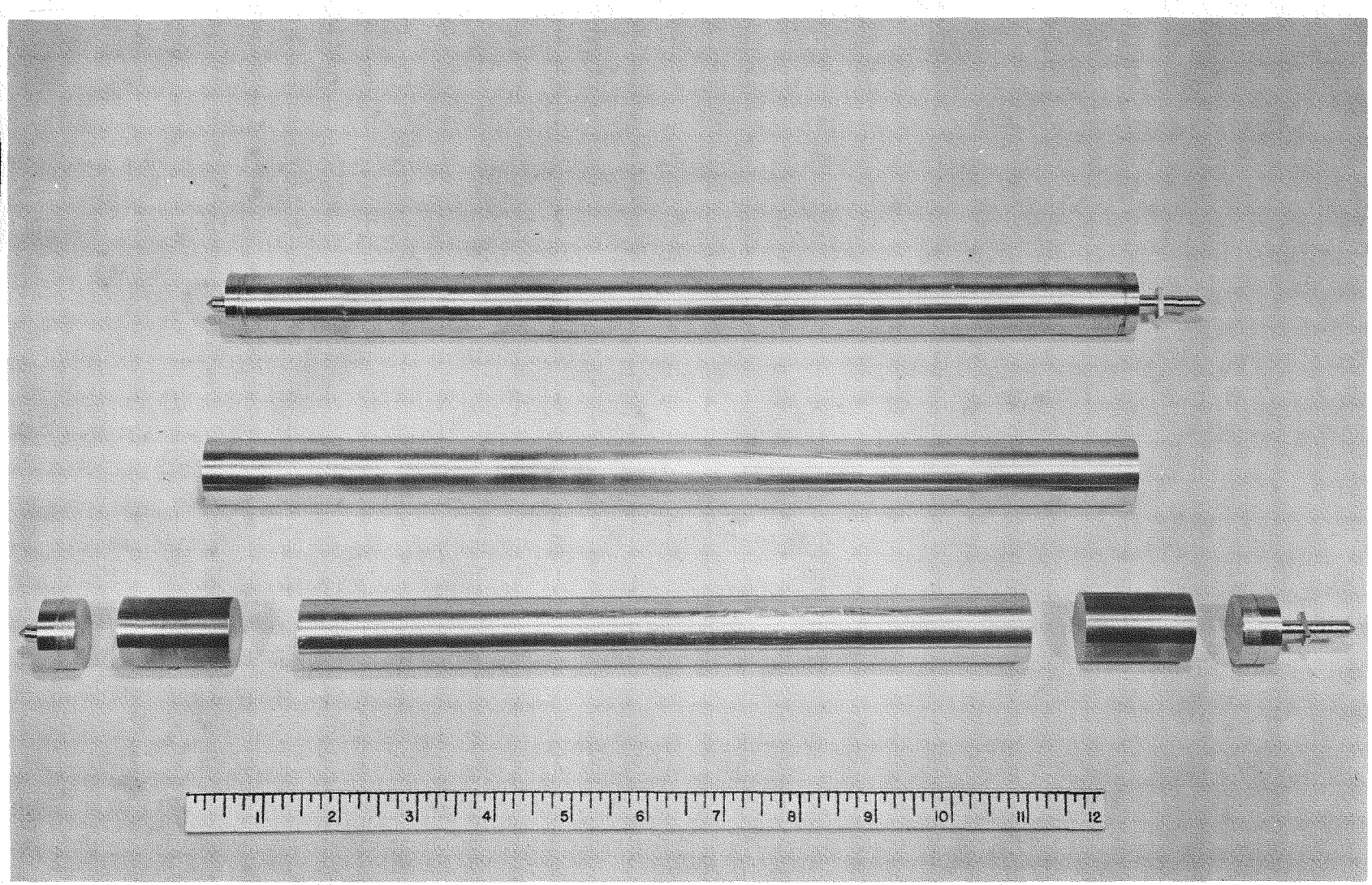

7512-5101

Fig. 3. Fuel Element Configuration

Classification cancelled (or changed to [redacted])
Lt. A. Edwin [illegible] Jr., Atomics International
Authority [illegible] Oct 21, 1959
by [illegible] TIE, [illegible] 0/29/5[illegible]

275 018

UNCLASSIFIED

[redacted]
UNCLASSIFIED

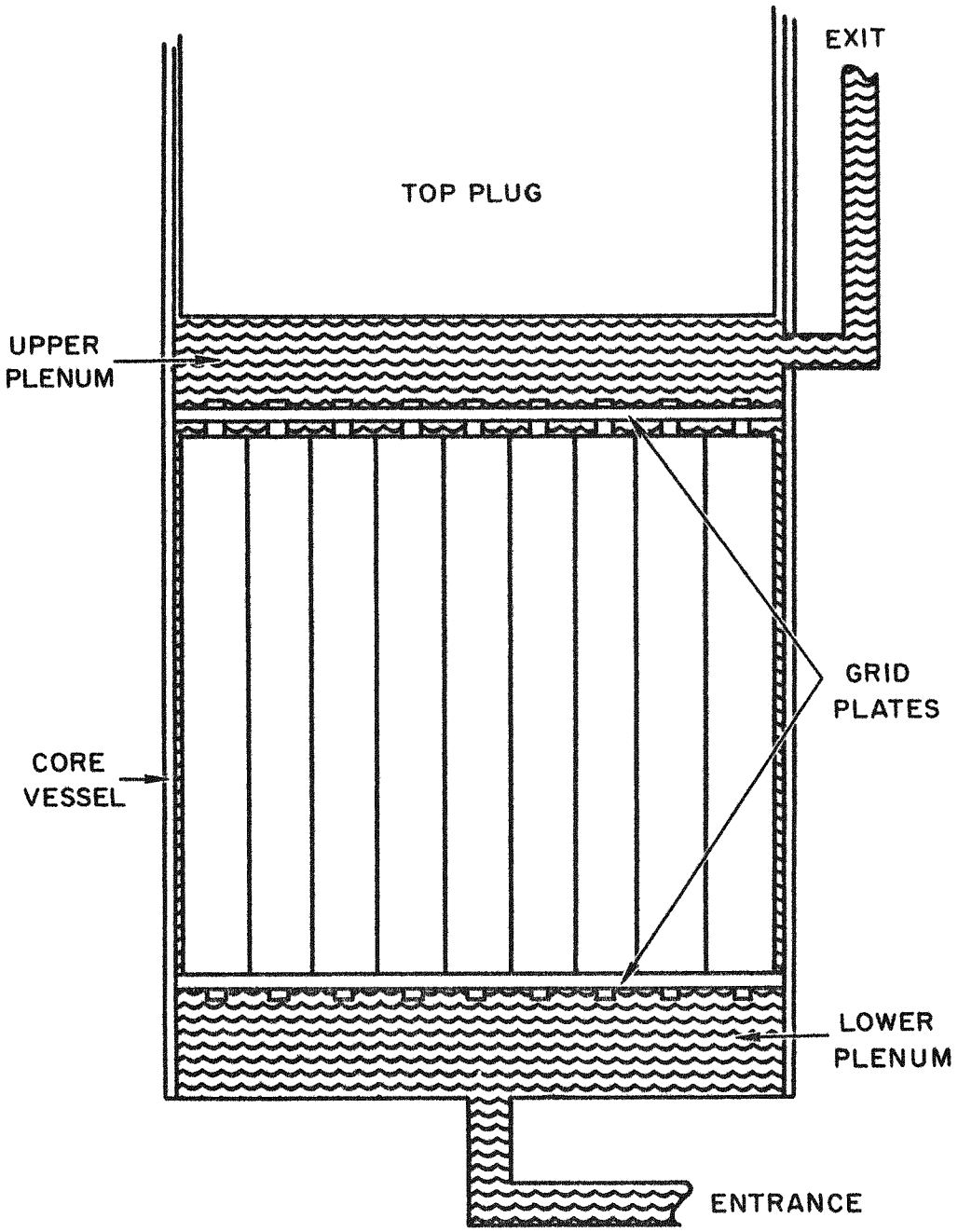

Fig. 4. Core Cooling

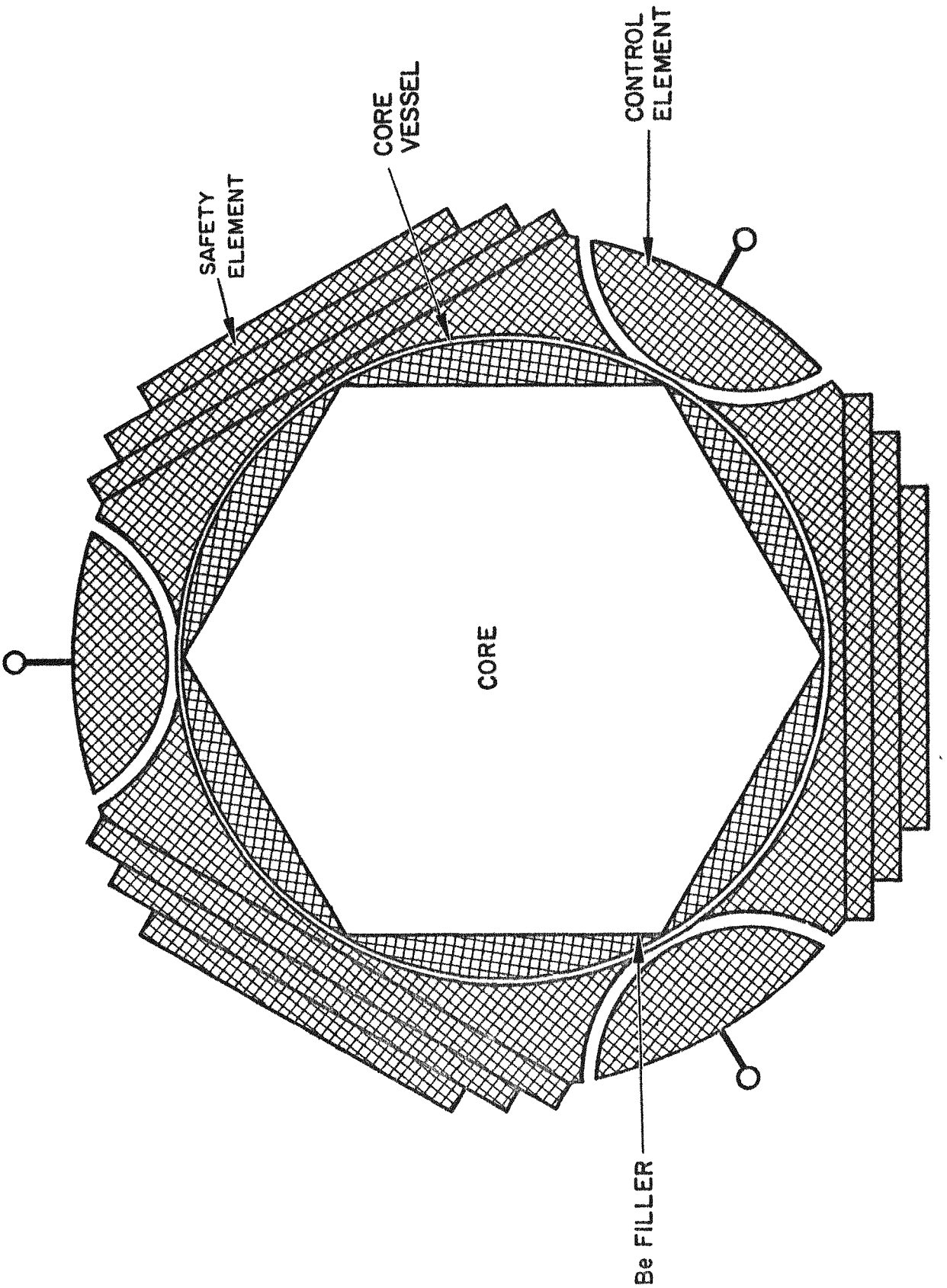

Fig. 5. Radial Reflector

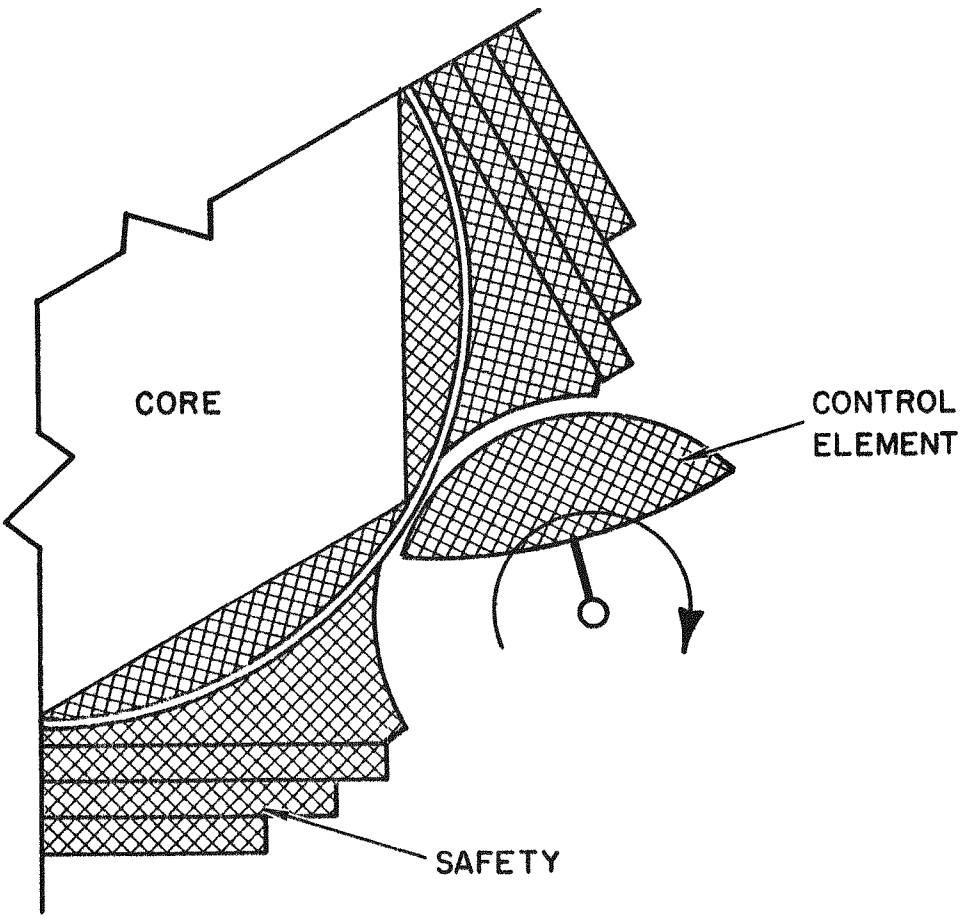

Fig. 6. Control Element Configuration

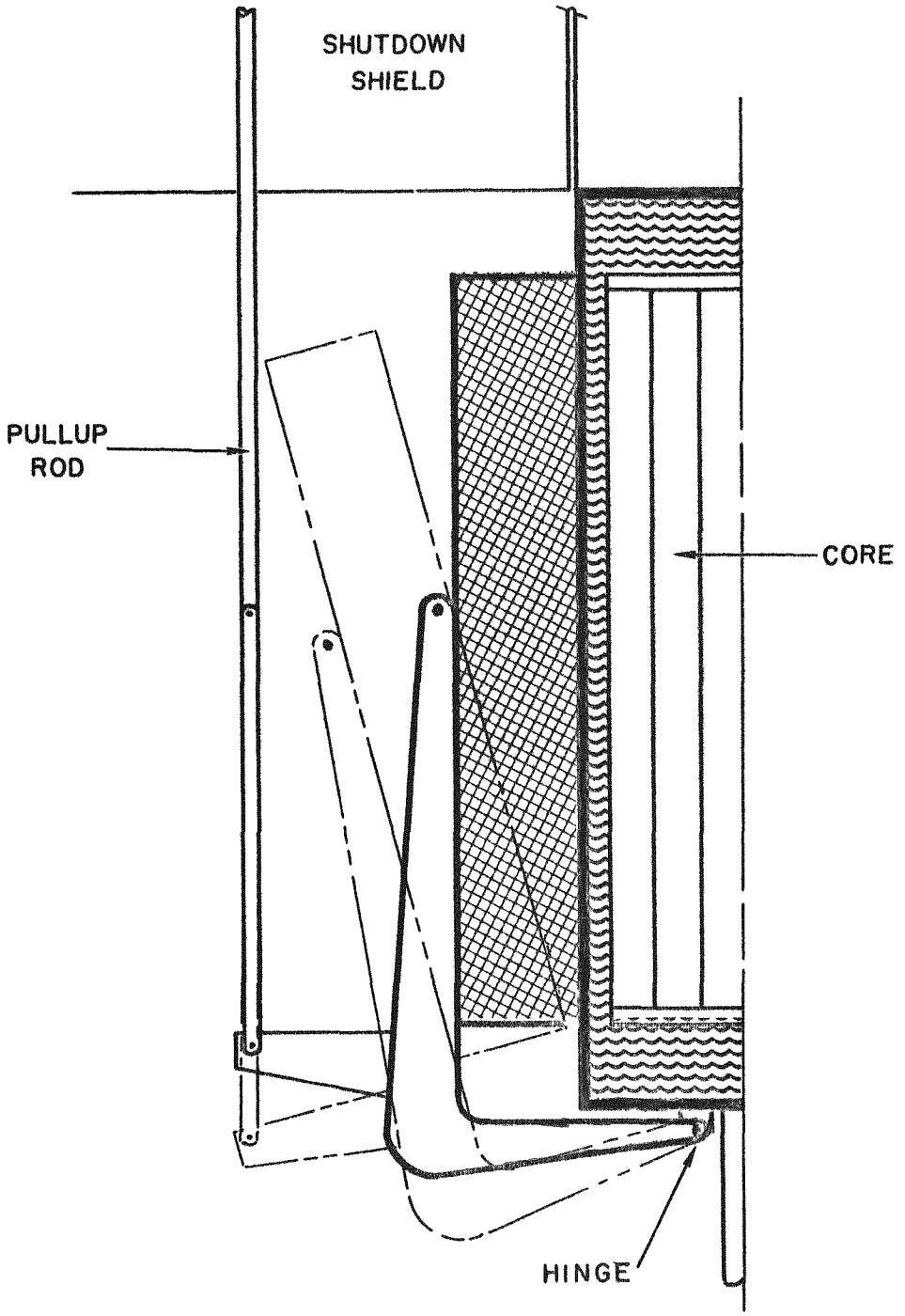

Fig. 7. Safety Element Configuration

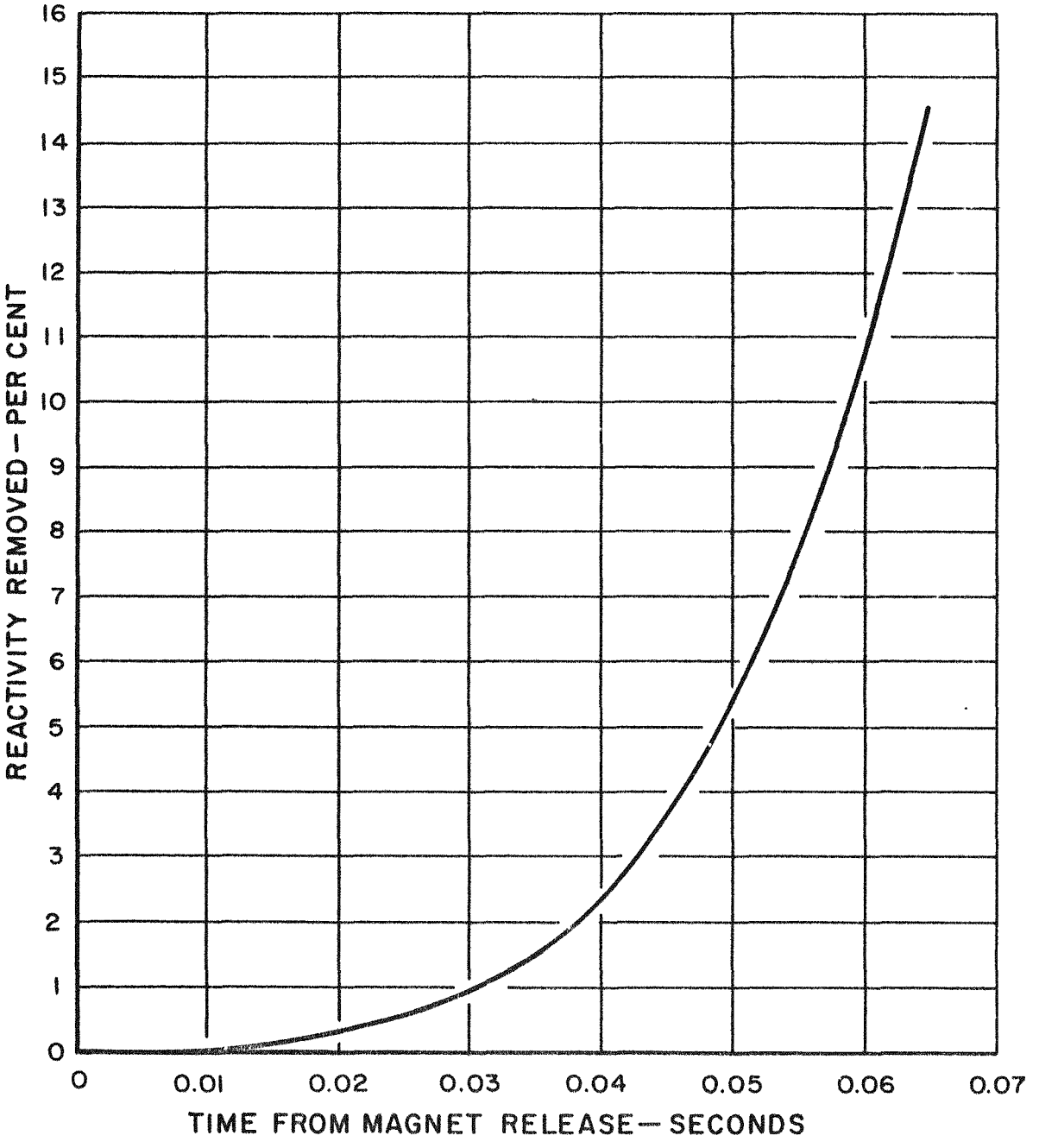

Fig. 8. Scram Reactivity Insertion Characteristics

UNCLASSIFIED

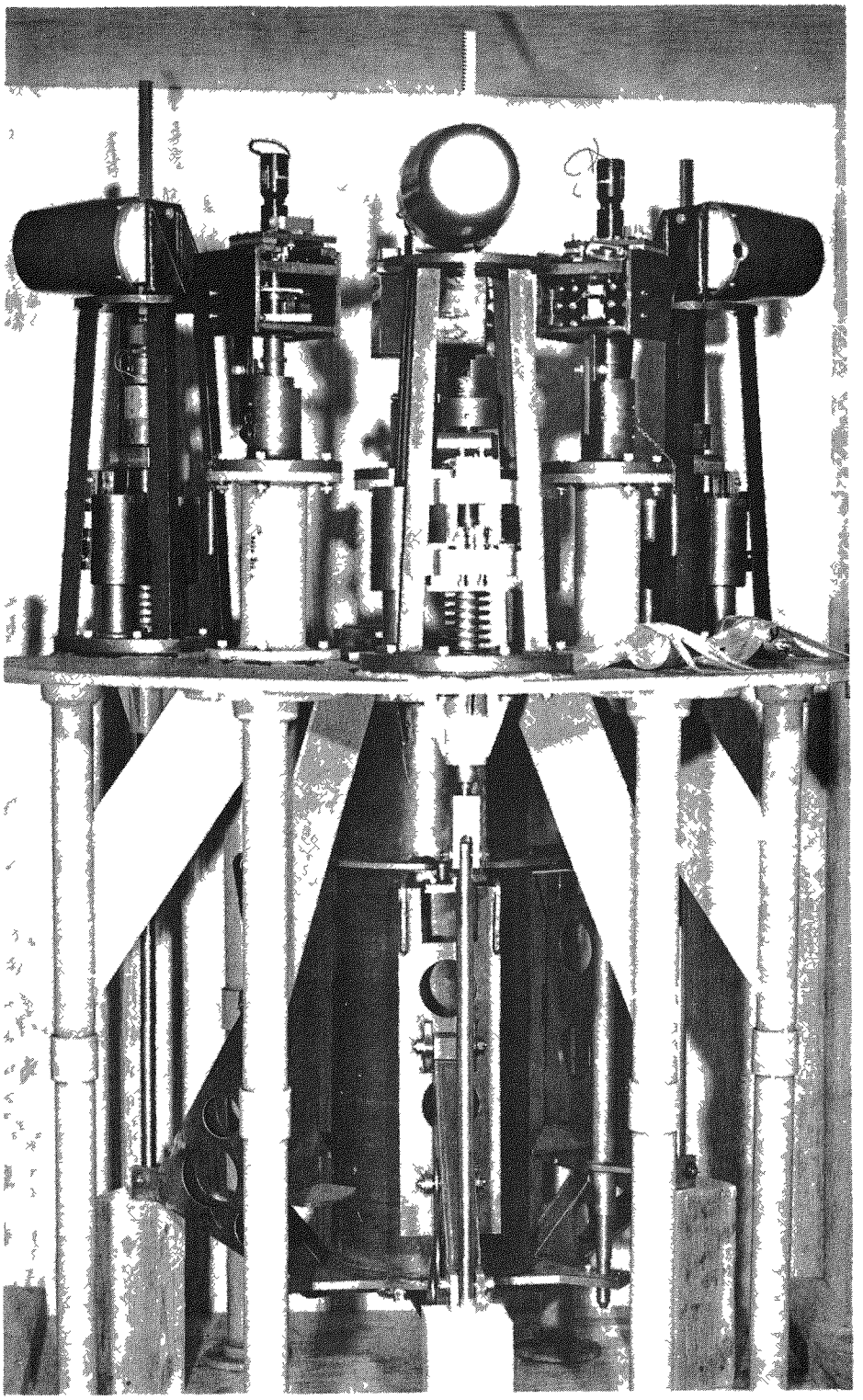

Fig. 9. Critical Machine

UNCLASSIFIED

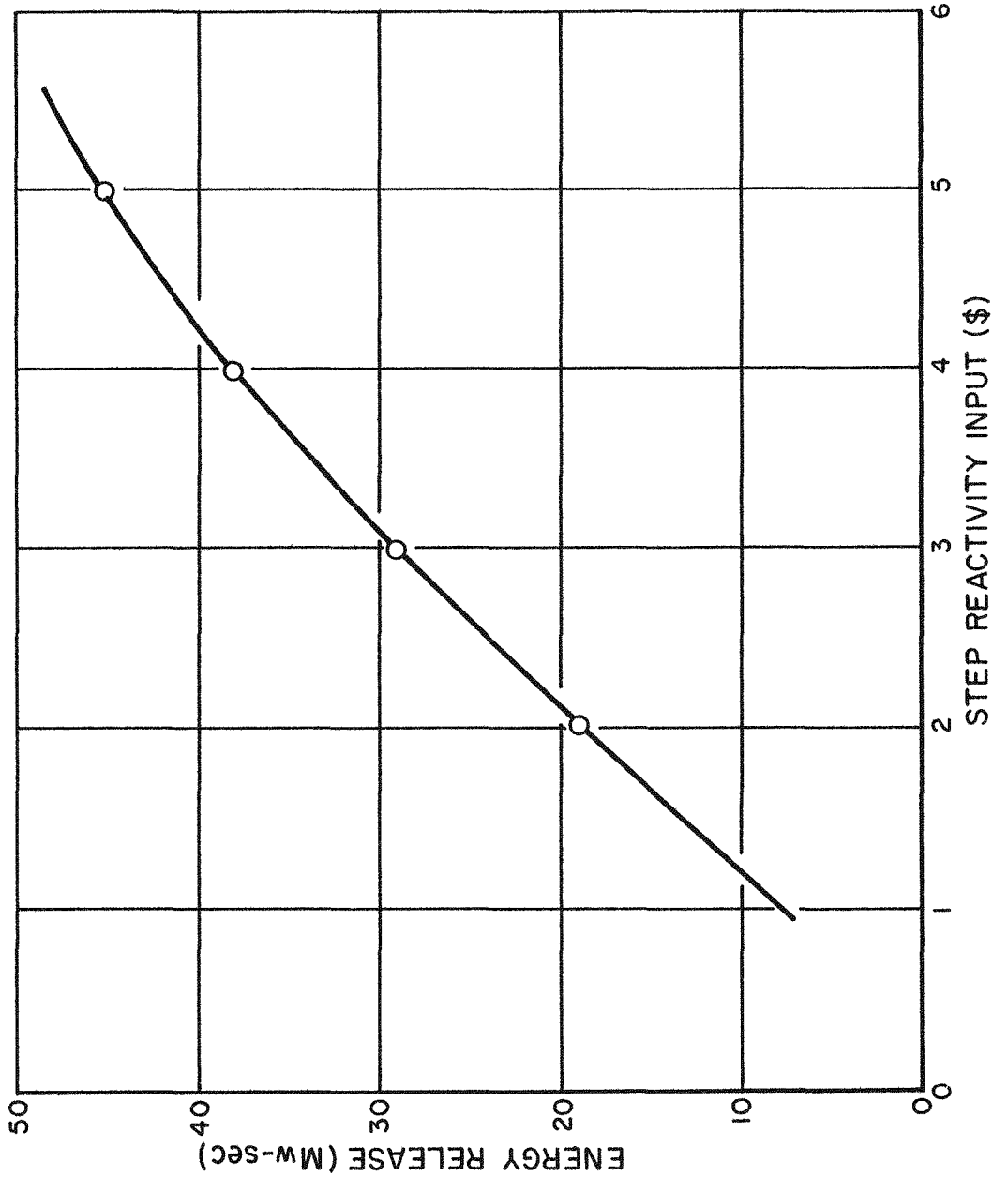

Fig. 10. Energy Release on Step Reactivity Input

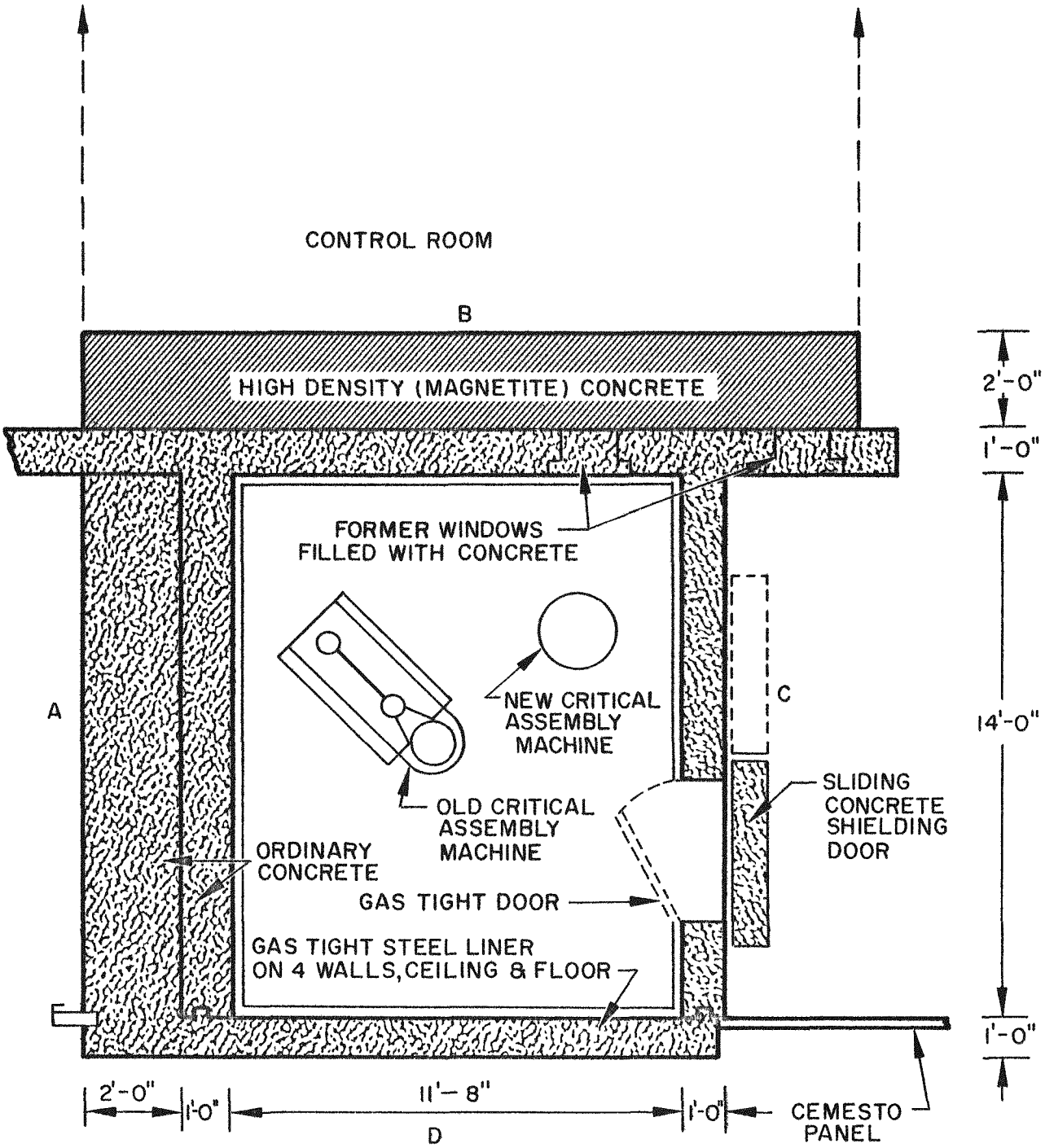

Fig. 11. Critical Assembly Test Cell

[redacted]

UNCLASSIFIED

DSTI
INV
22

ATOMICS INTERNATIONAL
A DIVISION OF NORTH AMERICAN AVIATION, INC.

UNCLASSIFIED

[redacted]