INIS-CH--040

CH0100319

ENS RRFM '98

Transactions

Oral Presentations and Posters

2nd International Topical Meeting on
Research Reactor Fuel Management
March 29 to 31, 1998
Bruges, Belgium
Organized by the European Nuclear Society

32/27

European Nuclear Society
Belpstrasse 23
P.O. Box 5032
CH-3001 Berne/Switzerland

Phone Number: +41 31 320 61 11
Fax Number: +41 31 382 44 66

PLEASE BE AWARE THAT
ALL OF THE MISSING PAGES IN THIS DOCUMENT
WERE ORIGINALLY BLANK

ENS RRFM '98

RRFM'98

2nd International Topical Meeting on

Research Reactor Fuel Management

Holiday Inn Crowne Plaza, Bruges, Belgium

March 29-31, 1998

Organised by the European Nuclear Society

in cooperation with the Belgian Nuclear Society

and the International Atomic Energy Agency

Invited and Contributed Papers

Oral and Poster Presentations

RRFM'98 PROGRAM COMMITTEE

Chairman: Jean-Louis Robert, CERCA, France

Vladimir L. Afanasjev, Novosibirsk Chemical Concentrates Plant, Russia

J.W. de Vries, Interfaculty Reactor Institute, The Netherlands

Lucien Gilles, CEA CE Saclay, France

Pol Gubel, SCK/CEN, Belgium

Erik Bertil Jonsson, Studsvik Nuclear AB, Sweden

Iain G. Ritchie, International Atomic Energy Agency, Austria

Gerd Thamm, Research Centre Jülich, Germany

David Thorn, UKAEA, Great Britain

Istvan Vidovszky, KFKI Atomic Energy Research Institute, Hungary

Published by the European Nuclear Society (ENS)

Belpstrasse 23, P.O. Box 5032, CH-3001 Berne (Switzerland)

Phone: +41 31 320 61 11 Fax: +41 31 382 44 66

Session 1: What are the challenges and requirements for research reactors?

Page

Use of experimental reactors for the testing of materials 1
B. Tinturier, EDF, France

Fuel characteristics needed for optimal operation of the BR2 reactor 6
E. Koonen, A. Beeckmans and P. Gubel, SCK/CEN, Belgium

Use of cold neutrons for condensed matter research at the neutron guide laboratory ELLA in Jülich 11
R. Schätzler and M. Monkenbusch, Forschungszentrum Jülich, Germany

Research reactors for power reactor fuel and materials testing — Studsvik's experience 16
M. Grounes, Studsvik Nuclear AB, Sweden

A novel reactor concept for boron neutron capture therapy: annular low-low power reactor (ALLPR) 21
B. Petrovic and S.H. Levine, The Pennsylvania State University, USA

Optimisation of a fuel converter for the MERLIN materials testing facility 26
Y. Pouleur, Ch. De Raedt, E. Malambu, G. Minsart and J. Vermunt, SCK/CEN, Belgium

Research reactor back-end options — decommissioning: a necessary consideration 31
M.R. England, D.R. Parry and C. Smith, BNFL plc, Britain

Session 2: Fissile materials supply, fuel fabrication and licensing

Review and summary of RERTR'97 37
W. Krull, GKSS, Germany

Design and production process of bushing-type fuel elements (FES) for channel research reactors 42
V.L. Afanasiev, A.B. Aleksandrov and A.A. Enin, Novosibirsk CCP, Russia

Qualification of UKAEA produced silicide fuel 50
J. Gibson and P. Cartwright, UKAEA, Britain,
and J. Markgraf, Joint Research Centre, The Netherlands

Technical ability of new MTR high density fuel alloys regarding the whole fuel cycle 55
J.-P. Durand, Cerca, B. Maugard, CEA, and A. Gay, Cogema, France

Fuel cycle for research reactors in the European Union 72
H. Müller, Nukem GmbH, Germany

Progress of the U.S. RERTR program 76
A. Travelli, Argonne National Laboratory, USA

Session 3: Reactor operation and fuel safety

Research reactor safety — an overview of crucial aspects 81
M. Lavérie, CEA, France

Practical limitations for the release of fission products during the operation of a research reactor: a case study of BR2 89
F. Joppen, SCK/CEN, Belgium

Refuelling strategy at the Budapest research reactor 94
T. Hargitai, KFKI, Hungary

Experience in operation and fuel management at the Dalat nuclear research reactor 100
Do Quang Binh, Tran Ha Anh, Ngo Phu Khang and Pham Van Lam, Nuclear Research Institute, Vietnam and Ngo Quang Huy and Nguyen Phuoc Lan, Centre for Nuclear Techniques, Vietnam

Session 4: Back-end options and transportation

Overview of spent fuel management and problems 105
I.G. Ritchie, IAEA, Vienna, Austria and P.C. Ernst, Canada

Spent fuel strategy for the BR2 reactor 110
P. Gubel and G. Collard, SCK/CEN, Belgium

The back-end for research reactor fuel 115
E.B. Jonsson, Studsvik Nuclear AB, Sweden

The experimental testing of the long-term behaviour of cemented radioactive waste from nuclear research reactors in the geological disposal conditions of the boom clay 119
A. Sneyers, J. Marivoet and P. Van Iseghem, SCK/CEN, Belgium

Spent fuel management in VVR-S reactors 124
A.M. Clayton and M.T. Cross, AEA Technology plc, Britain
and J.M. García Quirós and R. García-Bermejo Fernández, INITEC, Spain

MTR spent fuel back-end — Cogema's long-term commitment 129
J. Thomasson, Cogema, France

Preparation for shipment of spent TRIGA fuel elements from the research reactor of the Medical University of Hannover 136
G. Hampel and H. Cordes, Medical University of Hannover, Germany
and K. Ebbinghaus and D. Haferkamp, NOELL-KRC, Germany

Current activities on improving storage conditions of the research reactor RA spent fuel — part II 141
M.V. Matausek, M. Kopecni, Z. Vukadin. I. Plecas, R. Pavlovic, O. Sotic and
N. Marinkovic, VINCA, Yugoslavia

New developments in transportation for research reactors 146
J.-L. Mondanel, Transnucléaire, France

Posters

Page

1. **MLR reactor** 151
E.P. Ryazantsev, P.M. Egorenkov, V.A. Nasonov, A.M. Smirnov and A.V. Taliev, Kurchatov Institute, Russia
and B.F. Gromov, V.V. Kousin, M.N. Lantsov, V.P. Radchenko and V.N. Sharapov, SSC of RE - Institute of Physics and Power Engineering, Russia

2. **Design study of eventual core conversion for the research reactor RA** 156
M.V. Matausek and N. Marinkovic, VINCA, Yugoslavia

3. **About a fuel for burn-up reactor of periodical pulsed nuclear pumped laser** 161
A.I. Volkov, A.V. Lukin, L.E. Magda, E.P. Magda, I.S. Pogrebov, I.S. Putnikov, D.V. Khmelnitsky and A.P. Scherbakov, VNIITF, Russia

4. **Research reactor facilities & recent developments at Imperial College, London** 166
S.J. Franklin, A.J.H. Goddard and J. O'Connell, Imperial College of Science, Technology & Medicine, Britain

5. **Determination of fission and activation products in nearly fresh fuel elements by self-calibration** 171
K. van der Meer, A.Beeckmans De Westmeerbeek and P. Gubel, SCK/CEN, Belgium

6. **Phase stability of high-density Al - U-10wt.%Mo fuel with centrifugally atomised powder at elevated temperature** 176
K.-H. Kim, H.-S. Ahn, J.-M. Park, C.-K. Kim and D.-S. Sohn, Korea Atomic Energy Research Institute, Korea

7. **Fuel management and operation of the solution fuel critical facilities** 181
K. Ogawa, A. Ohno, H. Sono, H. Hirose, K. Sakuraba, S. Onodera, T. Morita, H. Arishima, E. Aizawa, T. Takahashi, S. Sugikawa and M. Miyauchi, Japan Atomic Energy Research Institute, Japan

8. **Criticality safety of fresh HEU fuel at the RA reactor** 186
M.P. Pesic, VINCA, Yugoslavia

9. **The neutron emission method for determination of fissile materials within the spent fuel equipment optimisation** 190
A. Abou-Zaid and K. Pytel, Atomic Energy Institute, Poland

10. **Core design optimisation by integration of a fast 3-D nodal code in a heuristic search procedure** 195
R. van Geemert, P.F.A. de Leege, J.E. Hoogenboom and A.J. Quist, Delft University of Technology, The Netherlands

11. **Shipment of TRIGA spent fuel to DOE's INEEL site — a status report** 200
J. Patterson, J. Viebrock, T. Shelton and D. Parker, NAC International, USA

12. **Encapsulation of ILW raffinate in the Dounreay cementation plant** 205
G.F. Sinclair, UKAEA, Britain

13. **Aspects of VVR-S spent fuel management** 210
C. Gârlea, I. Gârlea, I. Grancea, A.I. Olteanu and C. Kelerman, National Institute of Research and Development for Physics and Nuclear Engineering, Romania

Session 1:

What are the challenges and requirements for research reactors?

USE OF EXPERIMENTAL REACTORS FOR THE TESTING OF MATERIALS

CH0100320

B. TINTURIER

Electricité de France
Presidency and General Management
32, rue de Monceau
75008 PARIS - FRANCE

ABSTRACT

This paper provides a brief overview on the role of experimental reactors in irradiation of fuel and structural materials. They are particularly well fitted to study the behaviourial laws such as pellet-cladding interaction or the release of fission gases. Irradiation of structural materials is also an important use which requires high fluences.
Current installations are adequate for nuclear industry needs at the moment but as the need or high fluxes is growing, irradiation capacity of experimental reactors must be adapt to new requirements after 2005.

1. Introduction

The development of the nuclear electricity generating industry required, from the outset, the use of research reactors, commonly called experimental reactors.
Whether in the field of nuclear physics or the qualification of certain materials to be subjected to irradiation, they have played a fundamental role in the progress that have enabled us to achieved the current levels of performance.
This paper shall limit itself to examining the role of research reactors in the field of materials.
Fuel is a vital factor in this field, in that its behaviour influences the safety, availability and performance of reactors and therefore cost per kWh. We should not however ignore the behaviour of materials exposed to irradiation in the primary cooling circuits of nuclear units. The maintenance and life span of these units are directly affected by them.
After reviewing the main objectives, we shall examine how meeting such objectives raises the need for irradiation requirements.
In the absence of exceptional events leading to a sudden break, three areas for development should continue to be relevant, whatever the volume of new construction will be.

① Improving the performance of nuclear units will continue to be relevant in all development scenarios for costs concerning various production facilities and the following areas will be given priority:

- life span: anticipation and prediction, damage assessment, improving inspections, etc.
- fuel,
- instrumentation and information processing,
- the reduction of uncertainty and improving margins, which will enhance progress in the capacity and/or precision of the fuel codes (neutron, thermo-hydraulic, mechanical, thermo-mechanical, etc.) and anticipating adapting them to future requirements.

② Developments in the field of safety and radiological protection. The environmental consequences of normal operation and accident situations (retention of fission products at sources or within the containment, etc.), will continue to play an important part.

③ Back end of fuel cycle
In the year 2006, the French parliament should decide as to the future of irradiated fuel and waste. It is reasonable to assume that certain areas of research will be given priority whilst others are abandoned. Whatever happens, temporary and permanent storage and the transmutation of actinides will still be subjects for study and experimentation post 2006.
At present, the assessment of future requirements in terms of experimentation using experimental reactors, is not easy and questions, such as: what is the R&D approach to be adopted for the PWR plant series, or, what will be the role of fuel cycle research, are raised without a clear answer.
This paper will therefore be limited to the PWR, with European Pressurised Reactor (EPR) as the main guide line.

2. PWR fuel

2.1 The development of fuels

Requirements in terms of the experimental irradiation of fuel concern the following:

- the improvement of existing products,
- research for innovative solutions.

The main objective of this R&D effort are :

1. The minimisation of the cost of fuel cycle, one of the main parameters of which is burnup. At present, EDF is authorised to use its UO2 fuel to a burnup level of 47GWj/t per fuel assembly. Authorisation to extend this to 52 GWj/t should be given by the end of 1998. The target set for EPR is 60 GWj/t mean discharge.
2. The operability of units that depends heavily on the pellet - cladding interaction phenomenon.
3. The behaviour of the fuel: deformation of the fuel assembly, cladding failure, activation and corrosion products, etc.
4. The quest of MOX performances similar to those of UO2. If the equivalence between MOX and UO2 can be achieved, in so far as the operation of units is concerned, the discharge burnup of MOX remains less than that of UO2 (-20%): the management parity for both types of fuel is an important, long term objective if we consider that the performance if UO2 continues to improve. The first stage consists of 4 annual management cycles for UO2 and MOX fuel assemblies by the year 2001, with MOX assemblies reaching 50 GWj/t.
5. Burnable poisons and absorbers in the quest for better neutron efficiency and improved reactor behaviour.

2.2 The corresponding irradiation requirements

For each of the objectives set out above, the irradiation requirements are of the same type:

2.2.1 The qualification of a new component or new product under irradiation

The simplest and least expensive solution consists in using one of EDF's power reactors: representativity is perfect (neutron, thermal, physical/chemical environment). Results are achieved relatively quickly, since the load factor is very high. The only disadvantages are the risk of failure associated with irradiation (even if minimal) on the one hand and, on the other, possible disturbances during shutdown: the need to carry out fuel rod handling operations or inspections without affecting the critical path if the cost of irradiation is not to be affected by an increase in unit shutdown.

Correlatively, irradiation in so-called "baking" experimental reactors, designed to qualify behaviour at high burnup, can only be justified if the operating conditions are more severe than those in PWRs (thermal, physical/chemical), which is difficult to achieve. This type of irradiation has therefore virtually disappeared.

The qualification of a new product also requires the drafting of safety files regarding operation of the reactor in incident or accident situations. Justification may be provided through a study when the accident scenario and the properties of the new product involved in the accident are well known but also often by an experimental simulation :

For example:

- The simulation of a class 2 incident after prolonged operation a reduced power. At present, the resulting pellet - cladding interaction (PCI) can only be described correctly using power ramps performed in experimental reactors. CEA's OSIRIS reactor at Saclay is used to carry out such tests for industrial purposes.
- The simulation of a class 4 accident: the simulation of an accident, such as the ejection of a control rod resulting in reactivity excursion, requires an experimental reactor designed for such accidents. In France, tests of this type are performed in the CEA CABRI reactor at Cadarache.

2.2.2 Irradiation of an ionizing material or component

Our lack of knowledge concerning behaviour under irradiation requires an experimental reactor to be used for the first test, without attempting to achieve very high burnup, as in the case of highly innovating cladding materials (zirconium alloys with rare earths or uranium oxide with additives (CR_2O_3, SIO_2, AI_2O_3 to reduce pellet-cladding interaction). The possibility of unfavourable behaviour under irradiation could, if the experiment were performed in a power reactor, severely affect its operation (cladding failure, contamination of the cooling system, extended shutdown of the unit, etc.).
In this case, irradiation may be performed in an experimental reactor without the need for sophisticated instrumentation, since the main objective is to achieve acceptable burnup in as little time as possible. Whilst this requirement is less frequent for cladding or structural alloys, it remains essential for the development of improved oxide fuels (microstructures of UO_2 and (U_4Pu) O_2 designed to improve resistance to PCI and release of fission gases).

2.2.3 Studying behavioural laws in reactors

This is an important use of experimental reactors. The study of fuel in a hot laboratory as it leaves a power reactor, yields valuable information, but such studies are not sufficient:

- to devise the behavioural laws for materials (cladding, UO_2) essential for drawing up a code to predict thermo-mechanical behaviour (rods and assemblies) under normal operating conditions and incident situations, on the one hand;
    - mechanical properties, creep, enlargement of the cladding material,
    - thermal creep, densification, swelling of UO_2,
    - behaviour of unsealed rods under irradiation
- and on the other hand, to be able to check safety criteria under accident conditions (LOCA, RIA, earthquake). The effects of irradiation on these criteria have to be justified.

Devising behavioural laws therefore requires analytical testing. For metallic materials, such tests are relatively simple and can be performed in experimental reactors (creep and enlargement on a pressurised test sample). On the other hand, the behaviour of oxides requires much more sophisticated instrumentation:

- for thermal behaviour, measurements using a core thermocouple,
- for the release of fission gases, an integrated pressure sensor,
- for mechanical pellet - cladding interaction (PCI),
    - cladding deformation measurement,
    - power ramp testing.

In spite of the large number of tests already carried out, requirements in the short to medium term (5 to 10 years) remain significant and include the following:

- PCI modelling under transient conditions is necessary to test solutions to counteract PCI (UO_2 microstructures, ultra short pellets) on the one hand and, on the other, testing the resistance to PCI of new, advanced cladding materials such as the M5 FRAGEMA type Zirconium Niobium alloy.
- The release of fission gases (RFG) in MOX: parity of performance with UO_2 involves the development of microstructures which limit RFG. The large number of parameters (size of (U_2, Pu) O_2 aggregate, Pu content, additives, grain size) excludes direct irradiation in power reactors.

2.2.4 Understanding the physics of certain phenomena

Extrapolating the behaviour of the fuel in terms of burnup or operating conditions (reactor coolant chemistry for example) may require a detailed understanding of the physics of certain phenomena.
Although empirical modelling based on hot laboratory examinations of irradiated fuel is very useful, it may not be sufficient. For example:

- studying the influence of lithium or boiling on the acceleration of corrosion, which requires the use of a loop under flux to assess the impact of these two parameters over a wide variation range,
- studying the thermo-mechanical properties of the oxide using a core thermocouple, pressure sensor, fissile stack elongation sensor.

In this case, it may be noted that the experimental reactor and hot laboratory should be complementary.

3. Structural materials

The degradation of structural materials under irradiation is a problem common to all nuclear reactors. The most affected components are the reactor vessel and the internal structures it contains.
In the case of French PWRs, their design took such degradation into account, which led to the materials being selected accordingly. Nevertheless, safety analyses of each of the components concerned are useful to confirm that such degradation remains acceptable.
The tools for such analyses were developed at the start of the nuclear programme. Since then, research efforts have been concerned mainly with validating and improving them. Such efforts are on-going using experimental irradiation in particular.

3.1 The reactor vessel

Reactor vessels become brittle under the effects of irradiation; for French reactor vessels, this phenomenon does not appear to be worrying, thanks to the quality of the steels used. This aspect is checked using:

- previsional embrittlement formulae developed on the basis of large quantities of experimental data,
- the Surveillance Programme, which consists in irradiating, in each reactor, representative samples of the steels used in its vessel.

A few test samples are removed periodically and tested in order to assess the effects of irradiation.

Nevertheless and in addition to the Surveillance Programme, further irradiation is required in order to:

- refine the mechanical analysis methods, in particular by irradiating large test samples (up to 50 mm thick), to improve the representativity of the tests,
- study the behaviour of specific areas (areas affected by welding, etc.). For this, test samples taken from these areas have to be irradiated,
- describing the mechanisms that cause embrittlement. Such studies involve, in particular, irradiating model alloys (only containing two or three components) to simplify the phenomena.

Furthermore, the extension of the operation of reactors beyond their design life is under consideration. Accordingly, irradiation with high fluences (number of neutrons received per cm^2) will have to be carried out in order to confirm that such an extension will have no effect on the strength of the reactor vessels.
All such irradiation experiments in addition to Surveillance Programme may be performed in "pool" type experimental reactors, which provide irradiated samples quickly (1 to 2 years) under satisfactory and representative conditions.

3.2 Internal structures

In service, the internal structures of PWRs are severely irradiated (maximum fluence approximately 1000 times that of the reactor vessel) over a relatively wide temperature range. Such irradiation may, significantly, alter the mechanical properties of the alloys used and, in particular, may lead to embrittlement and loss of resistance to corrosion.
Studies carried out into this subject were designed to assess the behaviour of materials currently in service and to identify new materials with better resistance against the effects of irradiation (such materials may be used for the construction of future reactors).
Certain studies, particular into the effects of corrosion, do not require very heavy irradiation and are therefore carried out using experimental "pool" type reactors.
However, most of the programmes require irradiation with high fluences, which can only be obtained in fast breeder reactors. The most suitable reactors of this type for the subject (temperature, etc.) are

located in Russia. This situation has led French partners to establish collaborative relations with Russian institutes and such collaboration is extremely valuable, in spite of the distance.

4. Present cover of EDF's irradiation requirements

4.1 PWR fuel

At present, EDF requirements in terms of the irradiation of fuel are covered by three sources:

4.1.1 Power reactors

In France, almost all baking of commercial fuels is performed in power reactors. This state of affairs is relatively recent and is due to the gradual disappearance of experimental facilities (CAP, BR3 in particular), which have not been replaced. Furthermore, the PWR solution is totally satisfactory for those carrying out the experiments, even though it may cause a few problems for the operator.

4.1.2 Experimental reactors

In France, two such reactors were used until very recently: OSIRIS and SILOE, the latter of which was decommissioned at the end of 1997. OSIRIS, given its rejuvenation, should continue to operate until at least 2005. The experimental facilities most used by SILOE (release of fission products, advanced fuels) have or will be transferred to OSIRIS.

Therefore the irradiation facilities available in OSIRIS will enable the following fields to be covered:

- baking of rods and innovative products,
- release of fission products,
- properties of cladding and structural materials (creep, elongation, release),
- corrosion,
- power ramps,
- cladding failures (PWR and FBR).

Furthermore, EDF uses the services of 4 European reactors: Halden - Mol - Petten and Studsvik, either through international programmes or directly, as for the ramps performed at Studsvik.

4.2 Structural materials

The irradiation of internal materials requires high thermal and/or fast neutron flux (damage greater than 10 dpa/year) at temperatures of between 280 and 308°. At present, these tests are performed in all French and foreign reactors which comply with these requirements (BOR60, OSIRIS, SM2, Phénix). After 2005, the irradiation capacity of the experimental reactors in operation will no doubt have to be modified according to requirements.

5. Conclusion

Experimental reactors will continue to be necessary for as long as the nuclear industry continues to develop.

The current installations are capable of meeting the needs that have been identified; the occupation rate of these reactors in the future remains an unknown quantity.

The replacement of the present experimental reactors should be considered in the light of requirements and future developments, the direction of which are not yet known. In addition, they should be designed by giving priority to their ability to adapt to new concepts.

Furthermore, it would appear to be inevitable that the development of future irradiation facilities should be considered in an international context.

CH0100321

FUEL CHARACTERISTICS NEEDED FOR OPTIMAL OPERATION OF THE BR2 REACTOR

E. KOONEN, A. BEECKMANS and P. GUBEL
BR2 department
SCK-CEN, Boeretang 200, B-2400 Mol - Belgium

ABSTRACT

The standard BR2 fuel element contains 400 g ^{235}U under the form of UAl_x with burnable absorbers homogeneously mixed into the fuel meat. The uranium is highly enriched with a density of ~1.30 g U/cm³.
This fuel element was developed in the early seventies to satisfy the irradiation conditions required by many experimental programmes: large reactivity available, cycle length, hard neutron spectrum, limited motion of the control rods during the cycle thereby stabilizing the irradiation conditions. Another benefit is the reduction of the fuel consumption by increasing the burn-up at discharge.
BR2 has recently been restarted after the completion of an important refurbishment programme. Future utilization will again be concentrated on engineering R&D in the field of nuclear fuels, materials and safety, and on radio-isotope production. Therefore the required irradiation conditions and the corresponding fuel characteristics remain essentially the same as in the past.

1. Introduction

The BR2 core is composed of an assembly of beryllium prisms, each of them presenting a cylindrical bore. Due to this specific design, all BR2 fuel elements are assemblies of concentric cylindrical tubes. They have a 762 ± 12.5 mm active fuel length, derived from the length of the beryllium matrix. The diameters of the available bores in the beryllium matrix determine the outer diameters of the fuel elements: either 84 or 200 mm.

The standard 84 mm channel fuel element (type VIn) is made from 6 different fuel plate formats, corresponding to six concentric tubes. Each cylindrical fuel tube is an assembly of 3 equal incurved fuel plates. These fuel plates are mechanically fixed by the roll swaging technique into three grooved solid radial webs. The fuel plates are fabricated by the picture frame technique. The nominal meat thickness is 0.51 mm, with two aluminum alloy cladding layers of 0.38 mm each. The water gap between the plates is 3.0 ± 0.3 mm.
The inner fuel tube of each fuel element encloses a free volume available for irradiation purposes. This volume can be increased by removing one or more inner fuel tubes. An inner unfuelled guide tube can be added to allow axial movement of an experimental rig. An absorber screen can be added to harden the neutron spectrum.

Standard fuel plate formats are also used for the 200 mm channels:
- fuel elements with three concentric fuel tubes and a 57 mm outside diameter can be used in six peripheral holes of a 200 mm diameter aluminum plug.
- a 200 mm diameter fuel element is composed of 8 equal sectors, each comprising a maximum of 13 concentric incurved fuel plates (similar to the fuel elements used in the ATR reactor). These elements are used as driver fuel for special loop experiments.

2. Development of Optimal Fuel Elements

The objective of the BR2 operation is to satisfy the irradiation conditions requested by the experimental load, and to do this by guarantying safe operation and by making optimal economical use of the available fuel elements.

Initially the fuel core material was made of UAl_4 alloy, the uranium being 90-93% enriched. The volumetric composition was: 24 % UAl_4, 70 % aluminum and ~ 6 % void. A standard channel fuel element with 6 tubes contained 244 ± 5 g ^{235}U. The correponding uranium density was ~ 0.8 g U/cm³ (type VInA, table 1).

By the end of the sixties it became increasingly difficult to satisfy the irradiation conditions required by many experimental programmes:
- availability of higher reactivity: as the BR2 core configuration is variable, the alloy elements were adequate as long as the core size could be increased with a corresponding reactivity gain. However the benefit of adding still more elements to the periphery decreases while the cost continues to increase proportionally.
- increased cycle length: this also requires a higher reactivity.
- harder neutron spectrum and higher specific powers: the neutron spectrum in the rig irradiation positions inside the alloy fuel elements is quite hard. It is softer in the reflector irradiation positions, but the use of Cd screens can greatly decrease the flux depression associated with a largely thermal incident flux. However spectrum hardening is best achieved by increasing the fissile material density. The resulting decrease of the thermal flux can be compensated by an adaptation of the configuration.
- reduction of the motion range of the control rods during the cycle thereby stabilizing the irradiation conditions.

Increased reactivity and spectrum hardening called for an increase of the uranium density in the fuel meat. However to limit the initial reactivity and the control rod motion range, burnable absorbers had to be added to the fuel element. All dimensions of the fuel element, in particular the meat and cladding thickness, were to be maintained in order to preserve the known thermo-hydraulic conditions: this allowed a fairly easy extrapolation of the heat flux at the hot spot.
From the economical viewpoint, an important benefit expected from a higher performance fuel was the reduction of the fuel consumption by increasing the burn-up at discharge.

Technological difficulties with respect to casting and rolling did not allow the fuel manufacturers to raise the uranium content above 26 wt% in alloy cores. A substantial increase of the ^{235}U content in the fuel plates could only be obtained by using powder metallurgy techniques. Moreover this technology allowed an easy addition of burnable poisons with a homogeneous distribution in the fuel meat. Therefore it was decided to use cermet fuel material, obtained by blending UAl_x powder with Al powder. The compound UAl_x has a density of 69 ± 3 wt% U and contains about 6% UAl_2, 63% UAl_3 and 31% UAl_4. The uranium remained 90-93% enriched in ^{235}U.

The uranium loading and the appropriate amounts of burnable absorbers were determined by reactor physics calculations on basis of a 21 days operating cycle. The new standard channel fuel element with 6 tubes contained 330 ± 5 g ^{235}U. The corresponding uranium density was ~ 1.05 g U/cm³ (type VInC, table 1).

The burnable absorber content in each fuel element was 2.8 g natural boron as B_4C and 1.3 g natural samarium as Sm_2O_3. ^{149}Sm is used to reduce the control rod motion at start-up until ^{135}Xe and ^{149}Sm have reached equilibrium concentrations. ^{10}B reduces the overall control-rod travel during the cycle by increasing the absorber material at the beginning and depleting a major portion of it before the end of the cycle, thereby compensating the fissile material consumption.

However it soon became clear that the 330 g cermet elements could not cope with the reactivity demands of the experimental rigs. The fissile material content and hence the boron content had both to be increased. Calculations indicated that more than 30 g ^{235}U per element would be necessary. It was decided to directly increase the uranium content up to the metallurgical limit of that time. Thus the standard channel fuel element with 6 tubes of this new type contains 400 $\pm$ 6 g ^{235}U: 28 vol% UAl_x with 90-93% enriched uranium, 66 vol% aluminum and 6 vol% void. The uranium content per unit area of a fuel plate is 0.060 g $^{235}U/cm^2$ or 1.27 g U/cm^3 (type VInG, table 1).
The burnable poison content is increased to 3.8 g boron and 1.4 g samarium.

Routine operation with these new elements began in 1972 and continues up to the present day.

Some advantages of the VInG dispersion fuels over the alloy fuels are well illustrated in fig.1. Besides the increased cycle length and the reduced motion range of the control rods, the irradiation conditions for experiments are much more stable. This is clearly demonstrated by comparing the variation of nuclear heating at two points in a typical channel during an operating cycle. Similarly the dose rates to the experiments become much more uniform.

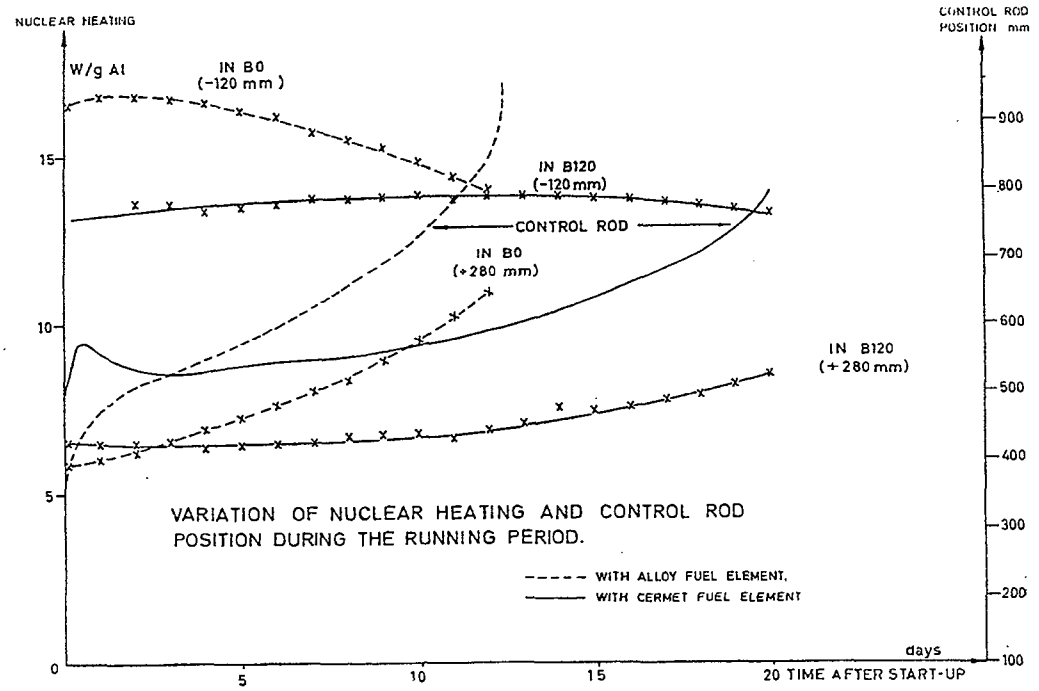

Fig.1. Variation of control rod height and nuclear heating with operating time

The mean thermal flux in the reactor is somewhat decreased for the same power level because the increase of the uranium loading increases the under-moderation (the ratio $[^1H]/[^{235}U]$ in a standard fuel cell passes from 300 to 183 when replacing the VInA alloy fuel by the VInG dispersion fuel).

The cermet elements are less reactive due to the presence of the burnable absorbers but they allow a better economical use of the available uranium. The burn-up at discharge and the maximum fission density are considerably increased (table 1).
Another major benefit of the use of burnable absorbers is the constitution of a large inventory of fuel elements with various partial burn-ups. This allows to adapt the local irradiation conditions not only by modifications of the configuration but also by adaptations of the burn-up of the driver fuel.

Further improvements have been envisaged (type VInH, table 1) but they were not realized.

		Tested				Theoretical	
		VIn A	VIn C	VIn G	VIn E	VIn H	VIn L
fuel material		UAl_4	UAl_x	UAl_x	UAl_x	UAl_x	(U_3Si_2)
fuel mass	^{235}U [g]	244	330	400	330	520	480
	enrichment	93%	93%	93%	72%	90%	19.9%
	U tot [g]	263	355	430	458	578	2412
absorber	B (B_4C) [g]	0	2.8	3.8	1.8	3.8	(3.0)
	Sm (Sm_2O_3) [g]	0	1.3	1.4	1.3	1.4	(1.4)
fuel density	g $^{235}U/cm^2$	0.037	0.050	0.060	0.050	0.078	0.072
	g U tot/cm^3	0.78	1.05	1.27	1.35	1.71	7.15
burn-up at discharge (^{235}U+^{239}Pu)		30%	42%	50%	42%		
max. fission density [10^{21} fis/cm^3]		0.625	1.15	1.60	1.15		
number of fuel el./1000 MWd		13	9	6.2	9		
cycle length [days]		14	21	21-28	14-21		
number of batches		2	3	4	3		

Table 1. Major characteristics of various BR2 fuel elements

3. Reduced Enrichment

Since 1984 SCK-CEN has actively participated in the RERTR programme. Fuel cycle calculations have been performed to determine the LEU fuel element design parameters required to approximate the standard HEU fuel characteristics.

In order to compensate the neutron absorption by ^{238}U and to preserve the reactivity characteristics in function of the burn-up, the ^{235}U content in the LEU fuel must be increased by ~20% to 480 g ^{235}U. If the meat thickness and the characteristics of the burnable absorbers are maintained, the required density is at least 7.1 g U/cm^3 (type VInL, table 1). However to preserve the reactivity worth of the control rods and hence the present cycle length, the nature, amount and localization of the burnable absorbers must be optimized (for example: Cd-wires in the radial webs instead of diluted boron).
The higher amounts of ^{235}U and ^{238}U lead to increased neutron absorption and increased hot spot factors. To preserve the present power level and the available fast flux, one can try to minimize the motion range of the control rods by adapting the characteristics of the burnable absorbers.
To limit the unavoidable reduction in thermal flux, the core management must be optimized by making the best use of the partially burnt LEU fuel elements.

If an increase of the meat thickness is considered, one possibility is the suppression of one fuel tube to maintain the cooling characteristics. This would lead to a ~20% reduction of the total fuel plate area. The heat flux must therefore be increased of the same amount to keep the total fission power unchanged.
Another possibility is the reduction of the water gap (from 3.0 $\pm$ 0.3 mm to a nominal value of 2.7 mm). This requires detailed thermo-hydraulic calculations and tests. Discussions with the fuel manufacturers concerning fabrication tolerances and associated costs are also required.

With regard to the technically proven LEU fuel element based on 4.8 g/cm^3 U_3Si_2, the result is:
- when the standard geometry is conserved, the fuel consumption would almost double and the neutronic characteristics of that fuel would be similar to those of the earlier VInA alloy element.
- when the fuel meat thickness is increased thereby reducing the thickness of the water gap, the major drawbacks would be a reduction of the available thermal fluxes (mainly within the fuel elements and also, to a lesser extend, in the adjacent reflector channels) and a reduction of the admissible heat flux (leading to a reduction of the overall power and the fast flux).

The conclusion of these investigations was that the conversion, although technically feasible, could not maintain the BR2 characteristics with the available LEU fuels.

CEN-SCK has offered to irradiate prototype LEU fuel elements and has also agreed to start the conversion process when an acceptable LEU fuel element becomes available. Acceptable means: without significantly degrading the performance and economically affordable (conversion cost + fuel cycle cost).

4. Recent Test Results

The presence of burnable poisons in the fuel cores requires special fabrication campaigns and makes it difficult to recover the uranium from scrap material. Therefore the fuel manufacturers proposed to avoid the introduction of absorbers in the fuel core material and to concentrate an equivalent quantity of poisons in the radial webs of the fuel element. Four prototype fuel elements with borated radial webs were manufactured in the late 80's and have been irradiated in BR2 up to their discharge burn-up. The conclusion was that the hot spot and reactivity characteristics of these fuel elements at low burn-up are not better than the characteristics of standard VInG fuel elements with their absorbers dispersed in the fuel meat. It was decided maintain the standard VInG elements.

Around 1994 the shortage of on-site storage capacity for spent fuel led to an urgent relieve reprocessing campaign. This opportunity was taken to test the feasibility of closing the BR2 fuel cycle by recycling the uranium recovered from reprocessing. Six test fuel elements containing 330 g ^{235}U, 72% enriched, have been successfully fabricated (type VInE, table 1). They have been irradiated in the BR2 reactor up to 43-48% burn-up without failure. Analysis of their reactivity characteristics led to the following conclusions:
- a mixed core strategy using standard VInG elements and 'recycled' VInE elements allows to maintain the irradiation characteristics and gives a well-balanced inventory of partially burnt fuel elements, without increasing significantly the fresh fuel consumption.
- exclusive utilization of the 'recycled' VInE elements would result in serious penalties: a cycle length mostly shorter than 21 days, a reduction of the mean burn-up at discharge from 52% to 42%, an increase of the fresh fuel consumption by almost 50%, and an unbalanced inventory of partially burnt fuel due to the decrease in reactivity. The last effect results in a further decrease of the burn-up at discharge.

5. Present Status and Future Needs

BR2 has been restarted in 1997 after the completion of an important refurbishment programme. The objective of the refurbishment was essentially a plant life extension: the characteristics of the installation remain the same and utilization remains dedicated to engineering R&D (nuclear fuels, materials and safety) and to the production of radio-isotopes with high specific activities. Thus the required irradiation conditions and the corresponding fuel characteristics remain essentially the same as in the past.

However the budgetary constraints are more restrictive and the operating costs, including those of the fuel cycle, must be strictly kept under control. The recent option chosen for the back-end of the fuel cycle (reprocessing and dilution of the recovered uranium) requires that all fuel elements to be used in the future must comply with this option.

Concerning the front-end there is no short-term fresh material shortage. In the mid-term there will be a need for new supply. Although the development of advanced LEU fuels is resumed, the actual availability of these new fuels is not to be expected within the next five years.

CH0100322

USE OF COLD NEUTRONS FOR CONDENSED MATTER RESEARCH AT THE NEUTRON GUIDE LABORATORY ELLA IN JÜLICH

R. SCHÄTZLER and M. MONKENBUSCH

Institut für Festkörperforschung
Forschungszentrum Jülich, D-52425 Jülich - Germany

ABSTRACT

Cold neutrons produced in the FRJ-2 DIDO reactore are guided into the external hall ELLA. It hosts 10 instruments that are fed by three major neutron guides. Cold neutrons allow for diffraction and small angle scattering experiments resolving mesoscopic structures (1 to 100 nm). Contrast variation by isotopic substitution in chemically identical species yields informations uniquely accessible by neutrons. Inelastic scattering of cold neutrons allows to investigate slow molecular motions because the low neutron velocity results in large relative velocity changes even at small energy transfers. The SANS machines and the HADAS reflectometer serve as structure probes and the backscattering BSS1 and spin-echo spectrometers NSE as main dynamics probes. Besides this the diffuse scattering instrument DNS and the lattice parameter determination instrument LAP deal mainly with crystals and their defects. Finally the beta-NMR and the EKN position allow for methods other than scattering employing nuclear reactions for solid state physics, chemistry and biology/medicine.

1. Introduction

For the research with cold neutrons in Jülich an external neutron guide laboratory ELLA that hosts a number of instruments (see Fig. 1) is attached to the confinement building of the reactor. Thermal neutrons from the D_2O moderator near the FRJ-2 DIDO reactor core diffuse into the liquid H_2 volume ($\approx$ 0.7l) of the cold source and by multiple scattering are cooled to the H_2 temperature. This shifts the Maxwellian spectrum of the neutrons from 2300 m/s to 600 m/s most probable velocity. These neutrons pass a cooled Bi single crystal filter of 50 cm thickness which prevents the core γ- and fast neutron radiation from entering the

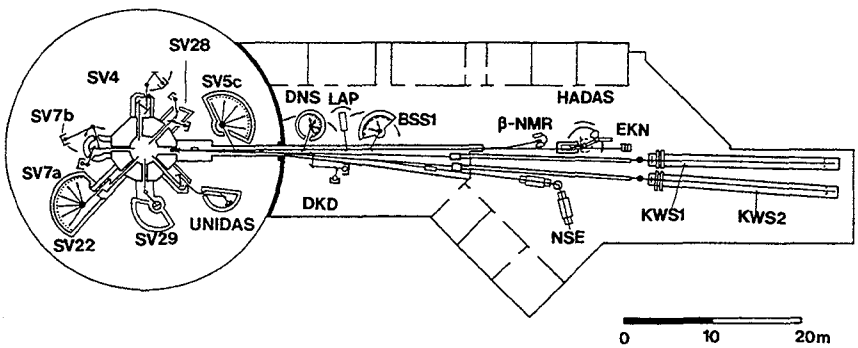

Figure 1: Layout of the DIDO reactor and ELLA with instrument positions.

neutron guide system. Thereby a rather clean beam of "cold" neutrons is provided and fed to the instruments in the guide hall ELLA by a manifold of ^{58}Ni coated neutron guides. The total flux in the guides at their entrance into the ELLA is $4 \cdots 5 \times 10^8 \mathrm{cm}^{-2}\mathrm{s}^{-1}$, after monochromatization and collimation $10^4 \cdots 10^7$neutrons/cm^{2}s –depending on the instrument– are left at the sample positions. By the cooling gain factors compared to a thermal beam of more than 20 are achieved for neutrons with velocities below about 500 m/s. These neutrons are especially suited to investigate structures and motions of mesoscopic size, e.g. of macromolecules, molecular aggregates, nano particles and early stages of precipitations and phase separations. The notions "soft matter" and "complex fluids" cover many of the thus treated research topics. Cold neutrons have wavelengths λ from about $5 \cdots 15$Å at the same time –in contrast to X-ray photons– their energy corresponds to low lying vibrational or relaxational molecular excitations. This coincidence enables the simultaneous investigation of structure and dynamics (motions that change/modulate the structure) by neutrons. The other unique advantage of neutrons is the possibility to create contrast and visibility by selective isotopic substitution –especially H/D replacement in soft matter samples. Further due to the cm penetration depth of neutrons and the availability of highly transparent window materials that may have thicknesses of several cm equilibrium samples may be studied under high pressures and/or high and low temperatures.
However the associated low interaction cross sections in combination with the limited available neutron fluxes poses several restrictions on the instrument design and use. The art of building neutron scattering instruments consists in guiding as many neutrons from the source via the sample scattering process to the detector. To a large extend this is effected by selecting a resolution as low as compatible with the typical structures in the scattering intensity, since starting from a Maxwellian neutron gas any narrowing of either the directions (divergence) or the used velocity band (wavelength) reduces the available flux of neutrons. Typically a large detecting area (many counting tubes, area detector) is essential for a reasonable data collection rate. Another consequence of the finite luminance of the source emitting non-directed radiation is that the number of neutrons that hit the sample and therefore might contribute to the signal scales with the sample area, i.e. the beam diameter. Since usually all other dimensions scale with the sample size this is the reason for the large size of the typical neutron instruments. It simply results from a compromise of feasibility and cost of enlarging with intensity.

2. Diffraction Instrumentation

The notion diffraction is used for experiments that measure the angular distribution of the scattering without analysing the spectrum of the scattered beam. The information gained corresponds to a "shap-shot" picture of the micro(meso)scopic structure. Whereas diffractometers that aim at the atomistic length scale in liquids and anorganic crystals require a wavelength shorter than typical atom-atom distances (a few Å) are located at "thermal" and "hot" beams, the diffraction instruments in the ELLA guide hall allow for the investigation of large scale structures. Especially the two small angle neutron scattering (SANS) instruments **KWS1** and **KWS2** cover the range from $10 \cdots 1000$Å. This is achieved by the combined effect of the use of long wavelength neutrons $\lambda = 6 \cdots 16$Å and of small scattering angles. The latter measure –together with the sample size argument given in the introduction– yields a very large overall length of about 40m, consisting of 20m collimation length and 20m sample-detector distance. The actual distances may be shortend by (automatic) insertion of neutron guides into the collimation track and moving of the detector to a closer position inside the evacuated flight tube of 1.5m diameter. The detectors have a sensitive area of 60×60cm^2 with a spatial resolution of $0.5 \cdots 0.8$cm. One of the largely identical SANS machines is equipped with a FZJ developped ^{6}Li detector the other has a ^{3}He gas counter of the Geesthacht type. The incoming neutrons are filtered by a mechanical velocity selector with a FWHM for $\Delta\lambda/\lambda$ of 10% or 20%. The broad velocity band ensures a high neutron flux at the sample, the resulting broadening of

the resolution is acceptable for most of the investigated problems. Whereas the SANS technique has a wide spectrum of application from the shape distribution of proteins over precipitations in metals, magnetic flux lines in superconductors to particle size distribution in technical powders like soot or concrete, the current mainstream application in Jülich are soft matter problems, all of which rely heavily on the (H/D) contrast variation and matching techniques. The topics extend from the configuration determination of polymer chains in the melt over to the investigation of demixing phase transitions of polymer and block-copolymer melts under variation of thermodynamical parameters as temperature and pressure. Polymer aggregation phenomena in solution (see Fig. 2) as well as structures and phases of microemulsion as well as the microscopic chain deformations due to strain of crosslinked rubber networks are other fields of research. As a supplement to the conventional SANS instruments a so called double crystal spectrometer **DKD** is operated, the spatial resolution of which extends into the range of light microscopy. Such a resolution requires the detection of extremely small scattering angles (a few μradian) which is realized by subsequent reflection of the neutron beam by perfect silicon crystals.

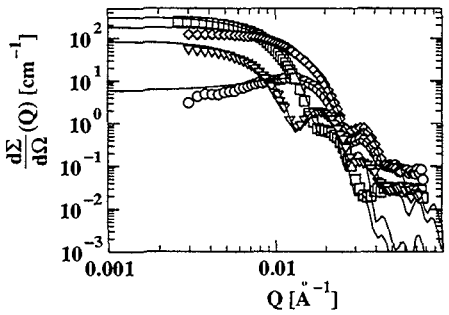

Figure 2: SANS from spherical blockcopolymeraggregates in three different contrasts. Lines correspond to a model fit.

A specialized diffractometer with some degree of spectral analysis is the diffuse neutron "spectrometer" **DNS**, the setup of which (see Fig. 3) resembles a neutron time of flight spectrometer. It utilizes neutrons which are reflected out of one of the guides by a graphite crystal monochromator ($\lambda = 3 \cdots 5$Å). Before hitting the sample the thus prepared monochromatic beam is periodically interrupted by a chopper consisting of a rotating neutron absorbing disc with a transmitting window at its periphery. The resulting neutron bursts are scattered by the sample and the scattered radiation is detected by 56 ^{3}He tubes arranged in a circle around the sample. Currently an option for polarization analysis is installed.

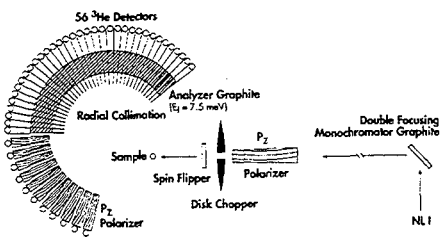

Figure 3: DNS layout

The primary purpose of this instrument is the measurement of diffuse scattering resulting from defects in crystals. A perfect periodic lattice yields scattering intensity only under the very restrictive Bragg condition, both the scattering angle and the crystal orientation must have special values. However if the crystal contains defects –either compositional and/or lattice distortions by interstitials– a low intensity scattering intensity contribution occurs virtually at any angular setting however with a typical smooth intensity distribution. The dependence of this so called diffuse scattering on the angles of scattering and orientation contains the desired information on the types of defects –and after model calculations– on the interaction potentials. The advantage of neutrons for these investigations is the ability to discriminate elastic scattering from inelastic thermal diffuse scattering. The latter is due to transient distortion of the lattice by thermal fluctuation, i.e. phonons. This may bury (e.g. in the X-ray scattering situation) the searched for defect signals if they are not discriminated by their inelasticity. In addition the DNS instrument may be used as a low resolution time-of-fligth spectrometer. The ploarization option will allow for the separation of incoherent and coherent and magnetic scattering contribution in the measurement of structure factors. An important application of this features is the investigation of the spatial correlations in amorphous polymers.

A former triple axis spectrometer **HADAS** has meanwhile be converted into a reflectometer. By using thin slits the monocromatic beam from a graphite crystal monochromator is collimated such that specular reflection from the sample surface at low incident angles (a few degrees). The specular intensity is sensitive to the (scattering length) density profile near ($\approx$ 1000Å) the surface or an buried interface. Polymer surfaces which exhibit scattering length density

variation due to enrichment/depletion of a H/D-labelled component near the surface as well as magnetic layers are investigated. The latter will benefit from a planned installation of neutron polarization analysis.
The high resolution lattice parameter determination setup **LAP** is a dedicated instrument to measure the lattice parameter of typical semiconductor materials –especially GaAs– with an accuracy of 10^{-6} with respect to a reference crystal. The method employs the Doppler shift of the neutron wavelength of Bragg reflected neutrons from a moving perfect crystal at a scattering angle of 180^0. Effects of defects, growing conditions, stoechiometry etc. on the lattice parameters are studied.

3. Spectrometers for high resolution inelastic scattering

Excitations like lattice vibrations, magnons or electronic crystal field transitions correspond to frequencies in the THz domain corresponding to energies in the meV range. Since thermal neutrons have energies in the 10^1meV region the above mentioned inelastic processes lead to a considerable, easily detectable change. However for low lying excitation like tunneling transitions or slow relaxative motions in the samples this change amounts only to energies in the μeV range. Use of incident neutrons with less energy, i.e. "cold" neutrons ($\approx 10^0$ meV), helps to increase the relative effect of these excitations on the neutron velocity. But additional specialized techniques have to be used to achieve the required resolution. The backscattering (π-) spectrometer **BSS1** utilizes the Bragg reflection from perfect silicon crystals at a scattering angle near 180^0 (=backscattering) where the reflected wavelength depends only to second order on the direction therby preserving a narrow wavelength band even for a divergent beam. Preparation of the incoming and the scattered radiation is performed by the same type of $\approx 180^0$ Bragg reflection, scanning of the energy transfer is performed by moving the monochromator crystal utilizing the Doppler shift of the neutron velocity (see Fig. 4).

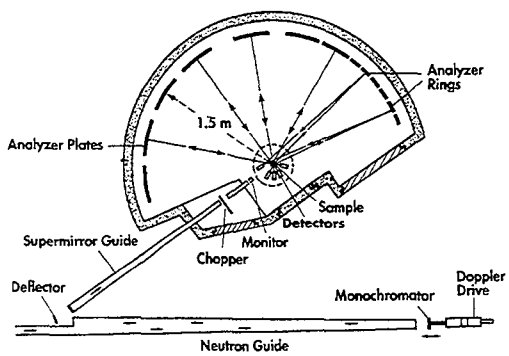

Figure 4: BSS1 layout

Due to the extremely narrow band of velocities selected by the monochromator from the continuous spectrum only a tiny fraction ($\approx 10^{-3}$) of the neutrons reach the sample. Therefor it is necessary to compensate for the loss due to the severe spectral filtering by collecting neutrons from very large solid angles onto a small amount (12) of detectors by a focussing arrangement of the analyzer crystals on 1m sized shperical reflectors that image the sample on one of the counting tubes located close to the sample. A coarse chopper interrupts the primary beam such that neutrons, that made the way from the sample to the analyzer mirrors and then back to the detectors close to the sample, may be discriminated from those, that went directly from the sample to the closeby counting tubes, by their time of flight. Typical experiments include the observation of tunneling spectra –mostly associated with the rotation of CH_3-groups– at low temperatures (< 15K) and their gradual transition from quantum mechanical tunneling to "classical" diffusive reorientation with increasing temperature. Also slow diffusive or relaxative motions –especially of protons with their high incoherent scattering cross section– are observed in a vast variety of different samples. The problems range from hydrogen diffusion in metals, ion motion in materials for electrochemical fuel cells to relaxative motions due to the glassy structure of polymers. The neutron spin-echo spectrometer **NSE** is complementary to the π-spectrometer. It covers roughly the same frequency range, however yielding data in the time domain ($\approx 0.04 \cdots 30$ns) rather than in the frequency space.

The method to keep reasonable intensity even in a limited solid angle corresponding to small angle scattering and with the detectability of velocity changes $< 10^{-4}$ is done by a tricky manipulation of the neutron spins which are treated as a kind of individual "stop watch" attached to each neutrons. The initially longitudinal polarized beam is extracted from the guide feeding KWS2 by a magnetic FeGe multilayer. Precession in magnetic fields effects the rotation of the "stop watch pointers". Since close to the sample (S) a magnetic element, the π-flipper effectively reverses the "stop watch pointer" (i.e. precession) angle, the passage through a precession track (P_2) exactly symmetric to P_1 before the sample leads to a resulting zero net angle at the end of the track (at the $\pi/2$-flipper). The beam has regained its full polarization, irrespective of the individual starting velocities of the neutrons ! This effect is called spin-echo. Any velocity change at the sample leads to polarization loss in this echo and therefore contains the information on the scattering spectrum. The decoupling of individual starting velocity and velocity change effect allows for the use of a broad (10% $\cdots$ 20% FWHM) incoming wavelength band which yields an intensity advantage of at least 1000 compared to direct filtering. By the use of a large 30cm^2 supermirror analyzer in combination with a matching ^{3}He area detector another data collection rate gain is achieved. For the soft matter and complex fluid research the NSE uniquely opens the field of dynamics to the small angle scattering regime. The investigation of polymer chain dynamics (see Fig. 6), fluctuation in microemulsion and aggregates is largely within the range of NSE and due to its relaxative nature benefits from the fourier transform property. Relaxation data are more readily interpretable in the time domain.

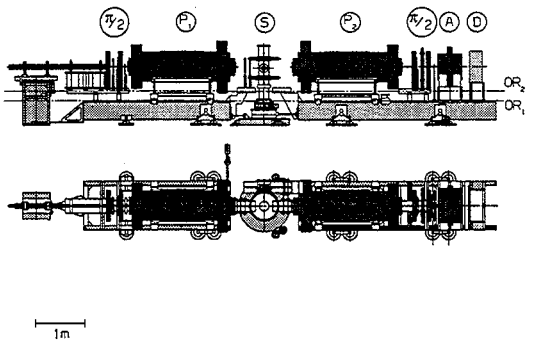

Figure 5: Mechanical layout fo the NSE spectrometer.Most conspicious the two symmetric main precession coils with compensating loops at both ends.

4. Nuclear solid state and chemical research

The β-**NMR** spectrometer utilizes the asymmetry of the direction of β-radiation from spin polarized short lived nuclei (e.g. ^{8}Li($T_{1/2} = 0.8$s), ^{12}B($T_{1/2} = 20$ms), ^{20}F($T_{1/2} = 11$s), ^{110}Ag ($T_{1/2}$ =24s), ^{116}In($T_{1/2} = 14$s)). These nuclei are created in the polarized state by capture of a polarized cold neutron by the stable precursor isotope. The sample is located in a homogeneous magnetic field, by the temperature and field dependence of the decay of the β-radiation assymmetry the spin relaxation times of the probe nuclei are investigated. This contributes to the investigations on atomic displacements and diffusion, defect kinetics, spin diffusion, spin-lattice relaxation, phase transitions and interactions with the electrons in the sample. The position **EKN** is a multipurpose position at the end of one of the guides with a flux of 2×10^8cm^2/s over 10×4.8cm^2. Currently the main use is chemical analysis of trace elements by the prompt γ-radiation accompanying virtually all neutron captures.

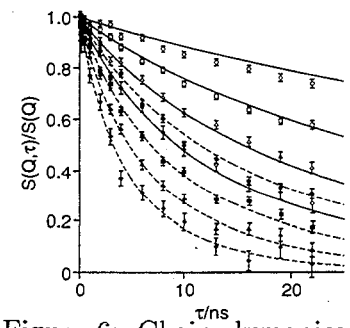

Figure 6: Chain dymanics of a 2.5% polymer solution.

CH0100324

RESEARCH REACTORS FOR POWER REACTOR FUEL AND MATERIALS TESTING - STUDSVIK's EXPERIENCE

M. GROUNES
Studsvik Nuclear AB
S-61182 Nyköping - Sweden

ABSTRACT

Presently STUDSVIK's R2 test reactor is used for BWR and PWR fuel irradiations at constant power and under transient power conditions. Furthermore tests are performed with defective LWR fuel rods. Tests are also performed on different types of LWR cladding materials and structural materials including post-irradiation testing of materials irradiated at different temperatures and, in some cases, in different water chemistries and on fusion reactor materials. In the past, tests have also been performed on HTGR fuel and FBR fuel and materials under appropriate coolant, temperature and pressure conditions.

Fuel tests under development include extremely fast power ramps simulating some reactivity initiated accidents and stored energy (enthalpy) measurements. Materials tests under development include different types of in-pile tests including tests in the INCA (In-Core Autoclave) facility. The present and future demands on the test reactor fuel in all these cases are discussed.

1. Introduction

The R2 test reactor is owned by STUDSVIK AB, a commercial company, active in the areas of services, supply of special equipment and systems and also consulting. The company is performing R&D work and associated activities, primarily in the nuclear energy field. STUDSVIK NUCLEAR AB, which is the largest subsidiary within the STUDSVIK group, is one of the direct offsprings of AB Atomenergi, the origin of the STUDSVIK group, which was formed in 1947. The STUDSVIK group has about 700 employees and a turnover of about 500 MSEK/year.

During the 1950's and 60's, an ambitious nuclear program was launched in Sweden. The experience and competence gained from a large number of advanced projects constitutes the basis upon which the present activities of STUDSVIK NUCLEAR are based. Since the 1970's, the efforts have been concentrated on light water reactor fuel and materials, and the originally domestic R&D programs have been expanded so that a large fraction is now financed by non-Swedish sponsors.

2. The R2 Test Reactor

The R2 reactor is a tank-in-pool reactor in operation since 1960 and originally similar to the Oak Ridge Research Reactor, ORR [1]. The reactor core is contained within an aluminum vessel at one end of a large open pool, which also serves as a storage for spent fuel. Light water is used as core coolant and moderator. The reactor power was increased to 50 MW(th) in 1969. In 1984-85 a new reactor vessel was installed.

The R2 reactor has a high neutron flux, see Table 1, and special equipment for performing sophisticated in-pile experiments. An important feature of the reactor is that it is possible to run fuel experiments up to and beyond failure of the cladding, which is not possible in a commercial power reactor.

Table 1
Technical Data for the R2 Test Reactor

Power	50 MW(th)
Moderator/coolant	H_2O
Reflector	D_2O, Be
Fuel length	600 mm
Fuel assembly length	924 mm
Fuel assembly cross section	79x82 mm^2
Number of fuel plates per assembly	18
Neutron flux in experimental positions	
Thermal	(0.3-2.5) x 10^{14}n/(cm^2·sec)
Fast (>1 MeV)	(0.5-2.5) x 10^{14}n/(cm^2·sec)

The components of the core are arranged in an 8x10 lattice, typically comprising 46 fuel elements, 6 control rods, about 12 beryllium reflector assemblies and a number of in-pile loops, irradiation rigs and aluminum fillers.

The R2 driver fuel assemblies are, since the beginning of 1993, of the LEU type. They have 18 curved fuel plates containing an aluminum-clad aluminum/uranium-silicide matrix. The initial fuel content is 400g ^{235}U per fuel assembly, enriched to less than 20 %. The burnup of the spent fuel of this type reaches about 65 %.

The R2 reactor and some of its irradiation facilities have been described in the literature [2,3]. Most base irradiations of test fuel (irradiations at constant power, where fuel burnup is accumulated under well-defined conditions) are performed in boiling capsules (BOCA rigs). Some base irradiations and all ramp tests (irradiations under power changes) are performed in one of the two in-pile loops, which can be operated under either BWR or PWR pressure and temperature conditions. The ramp tests, simulating power transients in power reactor fuel, are achieved by the use of ^3He as a variable neutron absorber. Structural materials, such as samples of Zircaloy cladding, steels for pressure vessels and vessel internals and candidate materials for advanced reactors can also be irradiated in special rigs either in the loops or in special NaK-filled irradiation rigs in fuel element positions with a well-controlled irradiation temperature. Special equipment for in-pile corrosion experiments in the loops has recently been developed.

3. Fuel R&D - earlier work

Since the early 1970's, a long series of bilateral and international fuel R&D projects have been conducted under the management of STUDSVIK NUCLEAR [4-6]. These projects have been pursued under the sponsorship of different organizations: the bilateral projects mainly by fuel vendors and the international projects by different groups of fuel vendors, nuclear power utilities, national R&D organizations and, in some cases, licensing authorities in Europe, Japan and the U.S. In most of the projects, the clad failure occurrence was studied under power ramp conditions utilizing the special ramp test facilities of the R2 test reactor. In recent years the projects have not been limited to PCI/SCC (Pellet-Cladding Interaction/Stress Corrosion Cracking) studies. Some of them also included other aspects of fuel performance: end-of-life rod overpressure studies and defect fuel degradation experiments.

Ramp testing in the R2 test reactor began in 1969. In the present Ramp Test Facility, introduced in 1973, the fuel rod power during a ramp test in a loop is controlled by variation of the ^3He gas pressure in a stainless steel double minitube coil screen which surrounds the fuel rod test section. The principle of

operation of this system is based on the fact that ^3He absorbs neutrons in proportion to its density, which can be varied as required by proper application of pressure. The efficiency of the ^3He neutron absorber system makes it possible to increase test rod power by a factor of 1.8 to 2.2 (depending on the fissile content of the fuel). In order to achieve a higher power increase than a factor of about 2, the reactor power must be increased before or simultaneously with the "^3He ramping". This technique with combined ramp systems is called "double step up-ramping" and makes it possible to increase the test fuel rod power by a factor of about 3. In the Ramp Test Facility ramp rates can be achieved in the range of 0.01 W/(cm·min) to about 3 000 W/(cm·min). The maximum achievable ramp terminal level depends on the neutron flux in the experimental position and on the fissile content in the test rod.

The rod overpressure experiments utilized the on-line measurements associated with the ramp tests combined with non-destructive examinations between reactor cycles and destructive examinations after the irradiation. When LWR fuel is used at higher and higher burnups the question of how the fuel might behave when the end-of-life rod internal pressure becomes greater than the system pressure attracts a considerable interest. On one hand end-of-life overpresure might lead to clad outward creep and an increased pellet-clad gap with consequent feedback in the form of increased fuel temperature, further fision gas release, further increases in overpressure etc. On the other hand increased fuel swelling might offset this mechanism.

The defect fuel degradation experiments also utilized the on-line measurements associated with the ramp tests and combined these with non-destructive and destructive examinations after the irradiation. Fretting type failures are predominant causes of the very few fuel failures that have occurred in recent years in LWRs. These primary failures are sometimes followed by secondary failures which frequently cause considerably larger activity releases. In such cases the subsequent degradation of the defect fuel rods by internal hydriding of the cladding and by oxidation of the fuel are the common destructive mechanisms.

During the 1970's extensive series of HTR fuel irradiations were performed in a special HTR gas loop system operating with on-line measurements and analyses of the released fission gas and of the fuel temperature.

4. Fuel R&D - upcoming work

The question of the ramp behavior in LWRs at "ultra-high" burnup (above 50 MWd/kgU) has been widely discussed in recent years as regards both normal and off-normal ramp rate conditions. However, only limited experimental information seems to be available at burnup levels beyond 30 MWd/kgU.

The concerns relate to the impact of changes in the physical properties of the fuel pellets at high burnup and their effects on the ramp behavior of the fuel rods. The fuel pellets tend to crack up in minor fragments and may no longer behave as solid bodies. The fission gases will be entrapped in a magnitude of small bubbles and might cause unacceptable fuel rod swelling on up-ramping. Other concerns relate to the loss of thermal conductivity and the impact of the rim zone on fuel ramp behavior.

The prospective ULTRA-RAMP project will constitute a combination of three groups of ramp projects. The ramp behavior and ramp resistance of current fuel types would be studied both under normal operating conditions ("slow" ramps), under off-normal operating conditions ("fast" ramps or transients simulating ramps corresponding to ANSI Class II and III events), and under "ultra-fast" conditions related to some ANSI Class IV events.

A few recent simulated RIA experiments (Reactivity Insertion Accidents) with high burnup fuel (55 and 65 MWd/t) have focussed interest on Class IV events. STUDSVIK is proposing a new type of "ultra-fast" ramps, faster than the fast ramps performed in earlier safety-related ramp projects but slower than the simulated RIA experiments. These new "ultra-fast" ramps could reach e.g. 100 kW/m during an 1

sec effective ramp time, corresponding to an enthalpy increase of 45 cal/g. Preparations for a demonstration experiment of this type are in progress.

The stored energy in fuel rods, the enthalpy, depends on the fuel design (dimensions, materials) and also burnup. This quantity is an important parameter in connection with safety considerations such as LOCA evaluations. The R2 test reactor is well suited for scram experiments where the thermal response of different types of fuel rods can be compared. The measurements can be performed by use of the R2 reactor's calorimetric rod power measurement system. Evaluation of an already performed demonstration experiment, STEED-I, on unirradiated fuel rodlets is in progress. An upcoming international project, STEED-II, will be based on tests of irradiated fuel rodlets.

5. Structural materials R&D

Specimens of structural materials are now irradiated either in rigs that only allow irradiations during whole 400-hr reactor cycles or in rigs where shorter irradiations, down to less than an hour, are possible. The specimens are either in direct contact with the loop water (temperature selected in the range 230 - 350 °C) or in some cases specimens of pressure vessel steels have been nickel plated in order to avoid corrosion problems during longer irradiations. In-pile rigs for fuel element positions are also used where the specimens are heated by gamma heating. In these rigs close temperature control (about ± 10 °C) has been maintained by placing the specimens in specimen holders filled with a NaK alloy. Varieties of these rigs are also used up to a temperature of 550 °C.

Recent work on stainless steels has to a large extent been concentrated on investigations of fusion reactor materials and on prospective FBR vessel materials. In this work tensile tests, fatigue tests and stress corrosion tests have been performed after irradiations to displacement doses of up to 10 dpa. Other types of post-irradiation tests, such as creep tests, CT tests and corrosion tests have also been performed. In-pile stress relaxation tests have also been performed. Presently in-pile creep tests are under development.

Experiments in the field of water chemistry and corrosion have been performed at Studsvik since the 1960's. A new facility, INCA (In-Core Autoclave) has been developed and put in operation [3]. The design of the facility is flexible in order to make it possible to rebuild it for different types of experiments, and has focused on the ability to control and monitor the water chemistry. The INCA is installed in one of the main in-pile loops. Test specimens and reference electrodes are installed in the facility. Degassed and deionized high purity water is fed into the facility. In order to establish a certain water chemistry different additives and impurities (H_2O_2, H_2, O_2, Li, B, Zn etc.) can be added to the system. The INCA facility can operate under both BWR and PWR conditions. Fast (>1 MeV) and thermal neutron fluxes up to 1.9 and $2.0 \times 10^{14} n/cm^2$, respectively can be achieved. The INCA facility is suitable for different kinds of experiments, for instance materials irradiations, waterside corrosion studies and in-core material testing, all under controlled water chemistry condition.

6. Future requirements on the R2 fuel

Potential requirements can be divided into different categories as follows:

* Future ramp tests on LWR fuel as regards
  ** Higher burnups
  ** Higher ramp terminals levels
  ** Higher ramp steps
  ** Higher ramp rates

* Other in-pile tests on fuel and structural materials
  ** Longer fuel cycles

Future ramp tests. So far ramp tests have mainly been performed on fuel with a burnup of up to about 50 MWd/kgU. In connection with future ramp tests burnups in the range of 60 to 100 MWd/kgU are now being discussed. In order to achieve the present ramp terminal levels on fuel with higher burnups and higher ramp terminal levels on fuel with the present burnups and other combinations of these parameters a higher thermal neutron flux is required. Thus a higher power density will require better heat transfer between fuel and coolant in the test reactor. In order to achieve higher ramp steps a shorter time constant is desirable.

Other in-pile tests on fuel. The Defect Fuel Degradation Experiments were discussed in Section 3. In these tests the special gas concentration gradients in the fuel-cladding gap, which act as a driving force for the phenomena under investigation, are eliminated when the reactor is shut down. Thus the present maximum test time is 400 hrs. Tests during longer times, e.g. 1000 hrs, would be desirable. Longer cycles would require a higher uranium contant in the fuel and possibly fuel with burnable absorbers.

Other in-pile tests on structural materials. In-pile tests like creep tests, relaxation tests and corrosion tests would also benefit from longer reactor cycles, e.g. 1000 hrs and in some cases from higher fast neutron fluxes.

Acknowledgements

The author is much indebted to Messrs H.Mogard, M.Carlsson and E.B.Jonsson for useful discussions.

7. References

[1] T.E.Cole, J.A.Cox, Design and Operation of the ORR. Peaceful Uses of Atomic Energy. Proc. Int. Conf., Geneva, 1-13 September 1958. Vol. 10. UN IAEA, New York & Viennna 1959, p. 86-106.

[2] M.Grounes, C.Gräslund, M.Carlsson, T.Unger, A.Lassing, Studsvik's R2 Reactor - Review of the Activities at a Multi-Purpose Research Reactor. International Group on Research Reactors (IGORR-5). Aix-en-Provence, France, November 2-6, 1996.

[3] M.Grounes, H.Tomani, A.Lassing, M.Carlsson, Fuel R&D at Studsvik - I. Introduction and Experimental Facilities. Nuclear Engineering and Design 168(1997), p. 129-149.

[4] M.Grounes, G.Lysell, S.Bengtsson, Fuel R&D at Studsvik - II. General Studies of Fuel Behaviour Including Pellet-Cladding Interaction. Nuclear Engineering and Design 168 (1997), p. 151-166.

[5] M.Grounes, C.Gräslund, G.Lysell, H.Tomani, Fuel R&D at Studsvik - III. Studies of Special Phenomena in Fuel Behaviour: Lift-Off and Defect Fuel Degradation. Nuclear Engineering and Design 168 (1997), p. 167-176.

[6] M.Grounes, C.Gräslund, M.Carlsson, T.Unger, Fuel R&D at Studsvik - IV. Upcoming International Fuel R&D Projects. Nuclear Engineering and Design 168 (1997), p. 177-181.

A NOVEL REACTOR CONCEPT FOR BORON NEUTRON CAPTURE THERAPY: ANNULAR LOW-LOW POWER REACTOR (ALLPR)

CH0100325

B. PETROVIC and S.H. LEVINE
Department of Nuclear Engineering
The Pennsylvania State University
231 Sackett Building, University Park, PA 16802, USA
E-mail: petrovic@gracie.nuce.psu.edu

ABSTRACT

Boron Neutron Capture Therapy (BNC), originally proposed in 50's, has been getting renewed attention over the last ~10 years. This is in particular due to its potential for treating deep-seated brain tumors by employing epithermal neutron beams. Large (several MW) research reactors are currently used to obtain epithermal beams for BNCT, but because of cost and licensing issues it is not likely that such high-power reactors can be placed in regular medical centers. This paper describes a novel reactor concept for BNCT devised to overcome this obstacle. The design objective was to produce a beam of epithermal neutrons of sufficient intensity for BNCT at <50kW using low enriched uranium. It is achieved by the annular reactor design which is called Annular Low-Low Power Reactor (ALLPR). Preliminary studies using Monte Carlo simulations are summarized in this paper. The ALLPR should be relatively economical to build, and safe and easy to operate. This novel concept may increase the viability of using BNCT in medical centers worldwide.

1. Introduction

There is significant activity at many institutions directed toward developing an effective Boron Neutron Capture Therapy (BNCT) for treating high-grade glioblastoma and other tumors[1-3]. This renewed interest is due to the improved understanding of the neutron beam characteristics needed for an efficient treatment of tumors and to the advances in the boron delivery drugs. Of particular interest is the treatment of brain tumors (such as the high grade glioblastoma) that are difficult to treat successfully by the existing classical methods. Deep-seated tumors can be most effectively treated by an epithermal neutron beam. Additional medical considerations, such as the time-dependent profile of the boron concentration in the tumor after administrating the drug, dictate that the treatment be performed within a certain time-frame, which defines the minimum acceptable beam intensity. The useful epithermal energy range for the irradiation beam is not unanimously agreed upon. The upper range as high as 70keV is sometimes quoted [Ref. 1, page 9]. However, in this work the 10keV upper energy limit was used, which is more limiting from the standpoint of achieving the required beam intensity. Further, the lower energy limit is set to 0.4eV and the minimum required beam intensity is assumed to be approximately 1.4×10^{9}n/cm^2-s [Ref. 4]. Note that values between 0.8×10^{9}n/cm^2-s and 2×10^{9}n/cm^2-s are cited elsewhere. At the same time, the thermal neutron dose, fast neutron dose, and gamma dose should be minimized. For example, according to Ref. 4, ratios of the fast neutron dose and gamma dose to the epithermal beam intensity should be $<10\times10^{-11}$ cGy-cm^2/n_{epi}. As an approximate criterion, the epithermal-to-fast flux ratio should be >12. A prerequisite for BNCT to become a viable cancer treatment option, is to develop nuclear systems capable of producing epithermal neutron beams of desired characteristics, that may be constructed at an acceptable cost, placed in medical centers worldwide, and operated safely and economically. The novel reactor concept presented in this paper aims at contributing towards achieving this prerequisite.

2. Other current and previous work

Presently in the USA, relatively high power research reactors at Brookhaven (3MW) and MIT (5MW) are being used to generate epithermal neutrons beams of sufficient intensity for the BNCT[1-3] research and treatment. The current approach is to use fission plates or a slab arrangement of highly enriched fuel assemblies combined with specially designed filters as beam spectrum converters to produce the epithermal beam. For example, considering characteristics of a typical TRIGA research reactor[5,6], its power would need to be several MWs to produce a beam of the desired spectral characteristics at the required neutron intensity. If a new reactor is designed specifically for BNCT, the minimum reactor power may be reduced, and power levels of 100kW (or more) have been reported[1]. Ref. 4 discusses a 50kW reactor with the epithermal beam intensity of $1.4 \times 10^9 n/cm^2$-sec. However, it employs highly enriched fuel, 90 w/o ^{235}U in U, which would make the licensing for medical centers very difficult. Therefore, it is desirable to develop a reactor design employing low enriched (<20 w/o) uranium, yet capable of generating the epithermal beam of sufficient intensity, at a power as low as possible.

3. Novel reactor concept: Annular Low-Low Power Reactor (ALLPR)

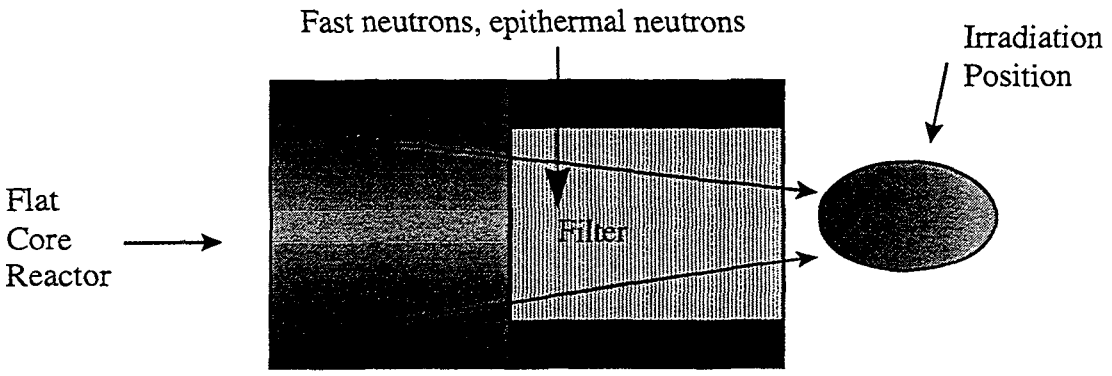

a) Standard design

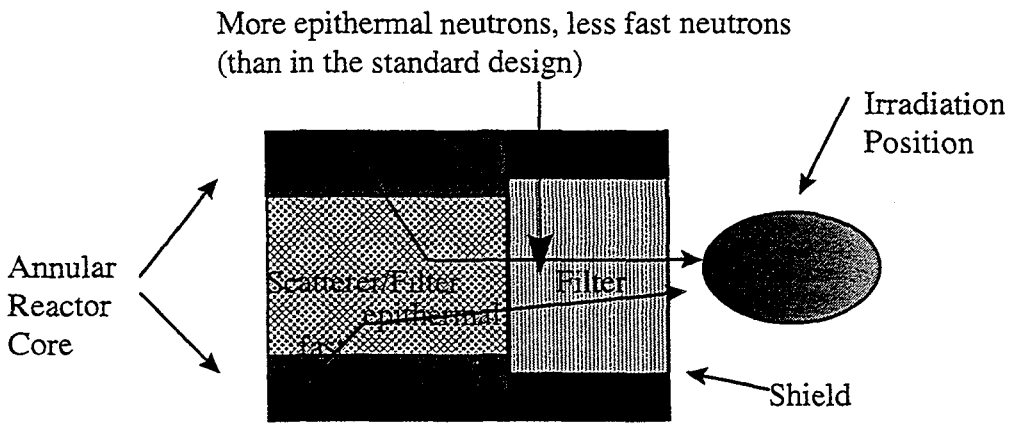

b) ALLPR design

Fig. 1. Schematic of the new annular reactor design concept.

A new reactor concept has been developed which has the potential for producing epithermal neutron beam of sufficient intensity (>1.4×10^9 n/cm^2-sec) while operating at ≤50kW, probably at 30-40kW. The achieved margin may be used either to further reduce the reactor power, or to further increase the beam intensity to reduce the time for patient exposure.

The novel idea is to use an annular core that has a large non-fuel central region consisting of scattering and filtering materials, to tailor the core neutronics as desirable for BNCT, and enhance production of the epithermal beam. A simplified schematic to illustrate the concept is given in Fig. 1. The novel concept is called Annular Low-Low Power Reactor (ALLPR). A reactor design based on this basic concept is presented in the next section.

4. Design methodology and results of numerical simulations

Survey calculations were first performed with the WIMS[7]/EXTERMINATOR-2[8] codes to evaluate characteristics of different fuel lattices with respect to BNCT. Standard 12 w/o TRIGA fuel and the Pathfinder-type fuel was considered in detail due to previous experience with such fuel at Penn State University.

The full reactor design and performance simulation studies were performed using the Monte Carlo code MCNP[9]. Three-dimensional reactor/filter model was developed and continuous energy ENDF-B/VI cross sections were used. Criticality calculations were employed to adjust core reactivity parameters and obtain initial estimates of the epithermal beam characteristics, and to optimize the core/beam interaction. The SSW ("Surface Source Write") option of MCNP was used for detailed beam analysis.

The annular core design of the ALLPR provides great flexibility regarding the core size (inner and outer radius) and length, and the central cavity material (scatterer and/or filter) so that various approaches may be applied to enhance the desired reactor characteristics. Different configurations were examined, and the optimization is still under way. For example, one potential ALLPR configuration, denoted as 3F, is schematically depicted in Fig. 2. This design uses 20 w/o enriched uranium and heavy water as the moderator. The core consists of an annular and a flat portion. The annular core acts as the driver region for the flat portion, and the central region is used both to filter neutrons coming from the flat portion, and to scatter (and filter) neutrons from the annular portion. The Al_2O_3 material is used as the main filtering material. Bismuth is employed to reduce the gamma dose to an acceptable level.

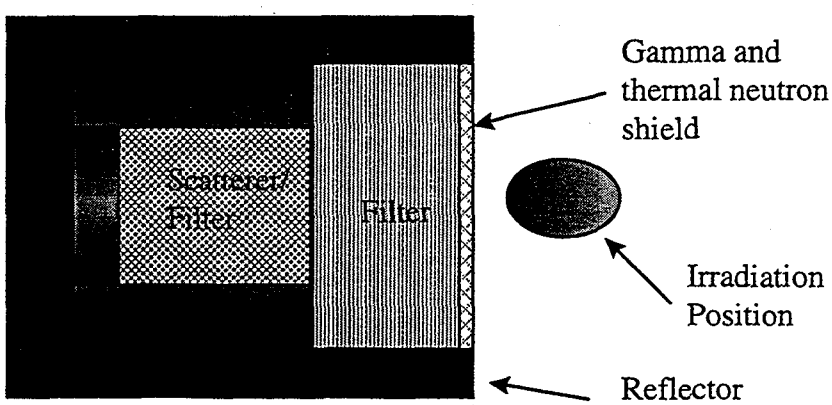

Fig. 2. Schematic of ALLPR configuration 3F.

Main characteristics of this BNCT reactor/filter setup are given in Table 1. Results are obtained by *MCNP* Monte Carlo simulations. The estimated statistical 1σ uncertainties are given in parentheses. The epithermal neutron beam intensity of ~1.75×10^9 n/cm^2-sec at 50kW implies that the reactor power of 40 kW is sufficient to obtain the nominal intensity of 1.4×10^9 n/cm^2-sec. The ratios for dose-to-epithermal beam intensity for fast neutrons and gamma rays are within acceptable limits. Additional analyses and design improvements are expected to further improve these characteristics.

Table 1. Main parameters for ALLPR configuration 3F

Epithermal Flux ϕepi (nepi/cm^2-s)	Fast Flux ϕfast (nfast/cm^2-s)	Flux Ratio ϕepi/ϕfast	Gamma Dose Ratio Dγ/ϕepi (cGy-cm^2/nepi)
0.4 eV - 10 keV	10 keV - 20 MeV		0-15 MeV (γ)
1.75×10^9 (5%)	1.42×10^8 (8%)	12.3	9×10^{-11} (8%)
NOTE: Above flux levels correspond to 50 kW			

5. Summary, conclusions and future work

A novel reactor concept has been developed that is capable of generating an epithermal neutron beam of sufficient intensity for BNCT using low enriched fuel (≤20 w/o ^{235}U in U) and very low power reactor (≤50kW). The novel reactor design is called Annular Low-Low Power Reactor (ALLPR). It is based on the annular core that utilizes the central region to enhance epithermal beam production.

Low power will make the ALLPR economically acceptable for BNCT and improve its operating and safety characteristics, while the low enrichment will make the licensing process viable and enable its construction and placement in medical centers worldwide.

Future work will include further enhancements of the neutronic design, optimization of the beam filter design and dosimetry studies. The complete reactor design will encompass the thermal design, initial safety studies, and preliminary cost analysis. Assuming that all these studies will be successfully completed, the new design may significantly contribute to the viability of BNCT.

6. References

[1] O. K. Harling, J. A. Bernard, and R. G. Zamenhof, "*Neutron Beam Design, Development, and Performance for Neutron Capture Therapy*", Plenum Press, New York, NY (1990).

[2] Special Issue of the *International Journal of Radiation Oncology Biology-Physics*, **28**, No. 5 (1994).

[3] A.D. Chanana, "*Boron Neutron Capture Therapy of Glioblastoma Multiforme at the Brookhaven Medical Research Reactor*" submitted to the U.S. Food and Drug Administration, Feb. 1, 1995.

[4] H.B. Liu and R.M. Brugger, "Conceptual Design of Epithermal Neutron Beams for BNCT from Low-Power Reactors," *Nucl. Technol.*, **108**, 151 (1994).

[5] J.A. Haag and S. H. Levine, "Thermal Analysis of the Pennsylvania State University Breazeale Nuclear Reactor," *Nucl. Technol.*, **19**, 6 (1973).

[6] B. Petrovic, Young-su Kim and A. Haghighat, "Characterization of Neutron and Gamma Radiation Fields at Penn State Breazeale Reactor," *Trans. Am. Nucl. Soc.*, **75**, 345 (1996).

[7] Fowler, T.B., et al., "EXTERMINATOR -II: A FORTRAN IV Code for Solving Multigroup Diffusion Equations in Two Dimensions", *ORNL-4078*, Oak Ridge National Laboratory (April 1967)

[8] J.F. Briesmeister (Ed.), "MCNP - A General Monte Carlo N-Particle Transport Code, Version 4A," *LA-12625*, LANL, Los Alamos, N.M. (1994).

[9] "WIMS-D4: Winfrith Improved Multigroup Scheme Code System," Computer Code Package *CCC-576*, RSICC/ORNL, Oak Ridge, TN.

OPTIMIZATION OF A FUEL CONVERTER FOR THE MERLIN MATERIALS TESTING FACILITY

CH0100326

Y. POULEUR[1], Ch. DE RAEDT[2], E. MALAMBU[2], G. MINSART[2], J. VERMUNT[3]

[1] *Reactor Experiments Department,* [2] *Fuel Research Department,* [3] *BR2 Department*
SCK•CEN, Boeretang 200, 2400-Mol, Belgium

ABSTRACT

SCK•CEN is at the present time developing the MERLIN materials testing facility, to be placed in the pool at the BR2 high flux materials testing reactor. It aims at irradiating large amounts of steel samples that are subsequently to be analysed in the framework of reactor vessel embrittlement research programmes. In order to fulfil the required fast neutron flux conditions, a converter, made of highly enriched uranium fuel plates, has to be inserted between the reactor vessel and the samples. The converter will transform the BR2 thermal neutron outflow into the required fast neutron flux. This converter has to be optimised.

1. Introduction: the BR2 Materials Testing Reactor

BR2 is a high flux materials testing reactor (MTR), which went critical for the first time in 1963 and has operated continuously on a regular basis since then. The only breaks in operation occurred when its beryllium matrix was replaced (1978-1980) and during its refurbishment (1995-1997).

The specific core array of BR2 sets it apart from other comparable MTRs. The core is composed of hexagonal beryllium blocks with central channels. These channels form a twisted hyperboloidal bundle and hence are close together at the reactor mid-plane but further apart at the lower and upper ends where the channels penetrate through the covers of the reactor pressure vessel (see Fig. 1). With this array, a high fuel density is achieved in the middle part of the vessel (reactor core) while leaving enough space at the extremities for easy access to the channel openings. The reactor is of the vessel type with a pressurized primary circuit (14 bars).

The reactor nominal full power depends on the core configuration used; at present, it ranges from 60 to 100 MW. Typical neutron fluxes (in the reactor hot-spot plane) are:

- thermal conventional neutron flux: $v_0 \int_0^{0.5eV} n(E)\, dE$: 2 to 4 10^{14} $n.cm^{-2}.s^{-1}$ in the reactor core and 2 to 9 10^{14} $n.cm^{-2}.s^{-1}$ in the reflector and core flux-trap (channel H1)
- fast flux (E > 0.1 MeV) : 4 to 7 10^{14} $n.cm^{-2}.s^{-1}$ in the reactor core.

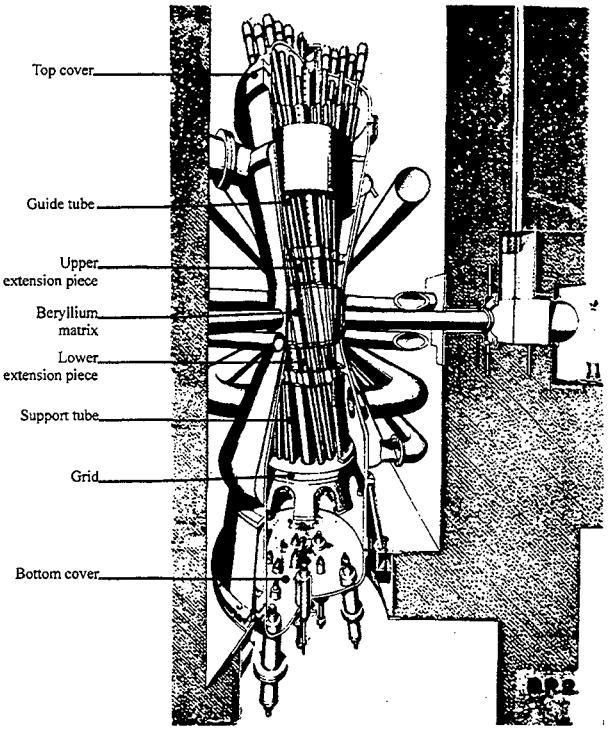

Fig. 1 BR2 materials testing reactor

2. The MERLIN Facility

The MERLIN facility (**M**aterials **E**xperimental **R**esearch Facility for **L**arge **I**rradiation volumes of **N**uclear steel samples) is mainly composed of three irradiation capsules, containing the steel samples, and a neutron converter, which will transform the BR2 thermal neutron outflow into the required fast flux (see Fig. 2). The facility will be placed in the pool, against the BR2 reactor vessel, in order to provide a large available volume for the samples and enough space for manipulations. It is hence a "pool-side type facility" (PSF). It should be noted that the neutron flux levels present **inside** the reactor are too high for most of the research programmes on reactor vessel steels.

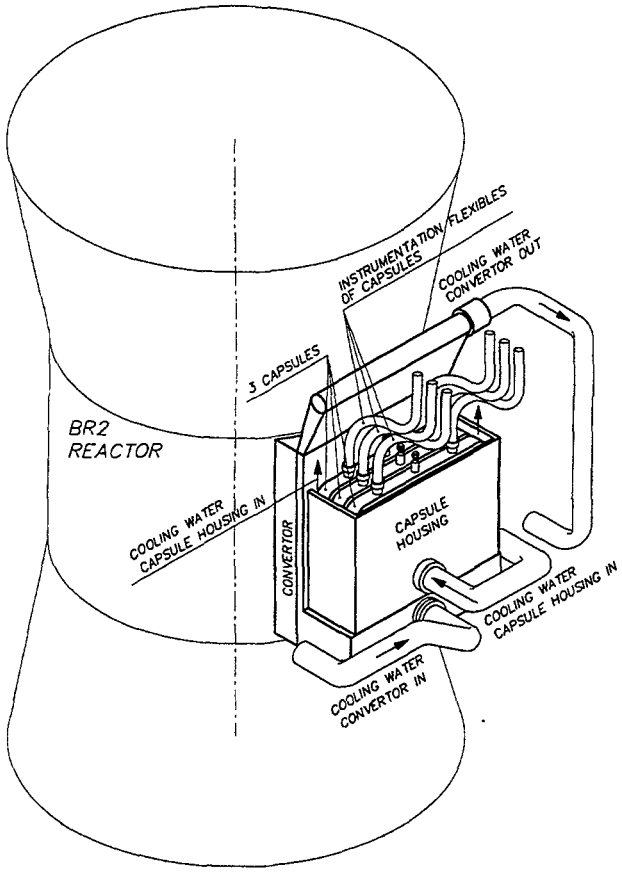

Fig. 2 MERLIN general view

Specifications

Experimental programmes require irradiation in a specific neutron and temperature environment. The samples should get a fast neutron fluence of 4 to 5 10^{+19} n.cm^{-2} (E > 1.0 MeV), with a maximum fast flux level of approximately 1.0 to 1.3 10^{+13} n.cm^{-2}.s^{-1}(E > 1.0 MeV). Their temperature must be included in the range of 280 to 300°C and the internal gradient should be reduced to 10°C for a batch and to 5°C in each individual sample.

The capsules

The three capsules are placed in a box, cooled by a forced water flow in order to get a homogeneous temperature at their walls. The flow comes from the bottom and is released straight into the pool. Each capsule can be independently handled for loading and changes of position.

In fact, the capsules are electrically powered ovens. The samples are heated to the required temperature by the gamma heating and the electrical heaters placed on each of their sides. The samples and the heaters are isolated from the envelope by a gap filled with gas (helium or neon). As the capsules must be interchangeable, i.e. able to be switched from one position to another, they should all present the same design (gas gap); hence the capsule in a "cold" position will need more electrical heating to reach the nominal temperature.

The converter

The converter, represented in Fig. 3 and further discussed in section 4, is composed of fuel plates made of enriched uranium (of the same type as the BR2 fuel element plates). They are inserted in an envelope that ensures a homogeneous distribution of the water coolant flow. By thermal fission induced in the converter fuel plates by the neutron flux escaping from the reactor, the required fast flux conditions in the capsules will be achieved. The heat generated will be carried away by means of a forced water flow, driven by pumps in a semi-open circuit connected to the pool.

3. Optimization of the Converter

The optimisation process aims at:
- producing the specified fast flux, i.e. the required flux level and a flat spatial profile;
- keeping as low as possible the gamma heating rate to avoid undesired thermal gradients;
- allowing easy manipulation;
- respecting a safe thermo-hydraulic regime;
- reducing the costs by adopting standard technology where possible.

The parameters which must be fixed are: the fuel type, the number of fuel plates, the meat density and thickness, the water gap, and the loading of the BR2 reactor in the neighbourhood of the irradiation facility.

4. Neutron and Gamma Calculations

In order to optimize the design of the converter, neutron and gamma calculations were performed considering various converter concepts.

The neutron and gamma flux calculations were carried out in two steps, using following neutron and gamma particle transport (S_N) codes:
- the one-dimensional code DTF-4 [1], which is part of the SCK•CEN code system MULCOS [2], together with the SCK•CEN 40-group coupled fast-thermal library [3] for the neutron calculations and a 20-group library based on EURLIB for the gamma calculations;
- the two-dimensional code DORT [4] with the same 40-group neutron library (two-dimensional gamma calculations were not performed yet).

First, one-dimensional multigroup transport calculations were performed in cylindrical geometry (R) (centred on the axis of the BR2 reactor) for a large variety of converter geometries (with one, two and three fuel plates) and fuel plate types as to their thickness and ^{235}U content. Various thicknesses of the water gap between the fuel plates and several combinations of structural materials between converter and steel samples were considered. In addition, the influence of the fuel element loadings in the BR2 reactor near the location of the new facility was investigated. These calculations, performed in the reactor midplane, were combined with simple two-dimensional calculations (also in the reactor midplane) in order to get an estimate of the fast flux distribution in the longitudinal direction (also referred to as X in what follows). For all these calculations, a cosine-shaped axial flux distribution was adopted for the third dimension (Z), parallel to the reactor axis.

Next, a few detailed multigroup two-dimensional (X,Y) neutron transport calculations (in the reactor midplane) were performed for realistic models corresponding to the device concept and geometry finally retained as well as to some small variants. As already mentioned, the X axis corresponds to the longitudinal direction, alongside the capsules or the converter plates (in the horizontal plane). (R,Z) calculations could follow, to determine also the axial shape of the fast flux and of the gamma heating.

The result of these calculations led to the design shown in Fig. 3. A converter with two rows of fuel plates (split up into five stacks put edge against edge) with the highest possible standard ^{235}U content appears to be the best compromise between performance and costs. Also the water gap thicknesses and the structural material geometries were optimized. Hence, the water gaps were kept to the minimum needed for adequate cooling, while discarding the bismuth and/or stainless steel screens, initially planned to be inserted between the converter and the capsules in order to reduce the gamma radiation issuing from BR2 and from the converter. Fig. 4 indicates the calculated longitudinal (X) distribution of the fast neutron fluxes (E > 1.0 MeV) in the converter fuel plates as well as in the midplanes of the three capsules for the (practically optimized) design shown in Fig. 3.

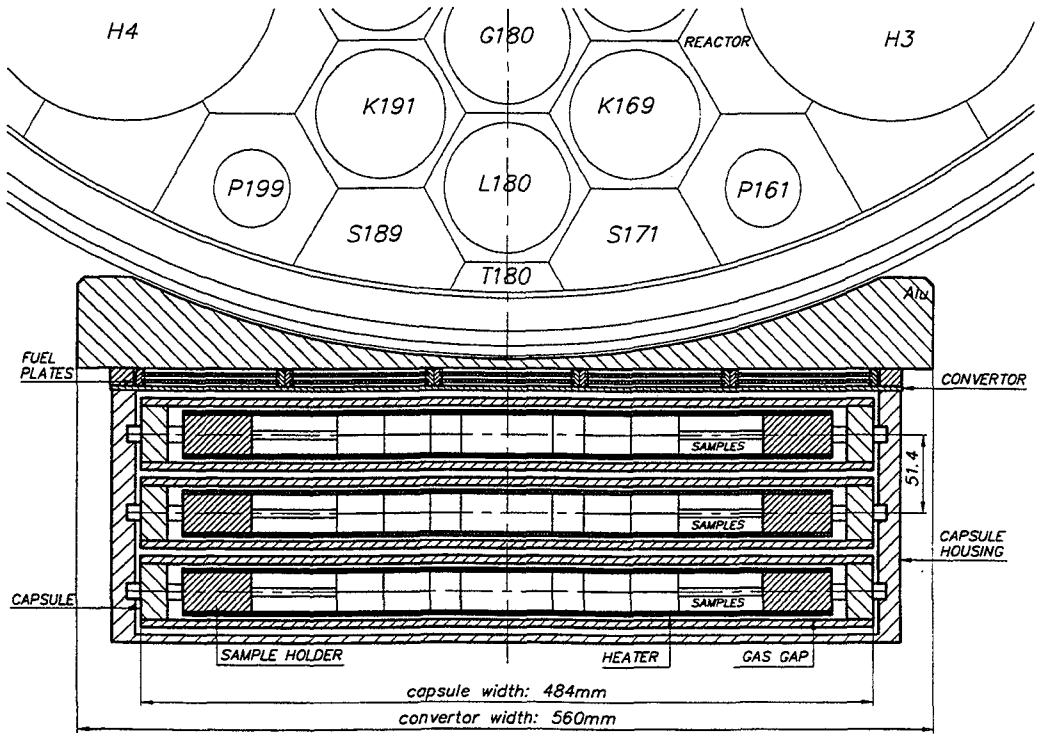

Fig. 3 Horizontal cross-sectional view of the MERLIN pool-side facility (at the reactor midplane).

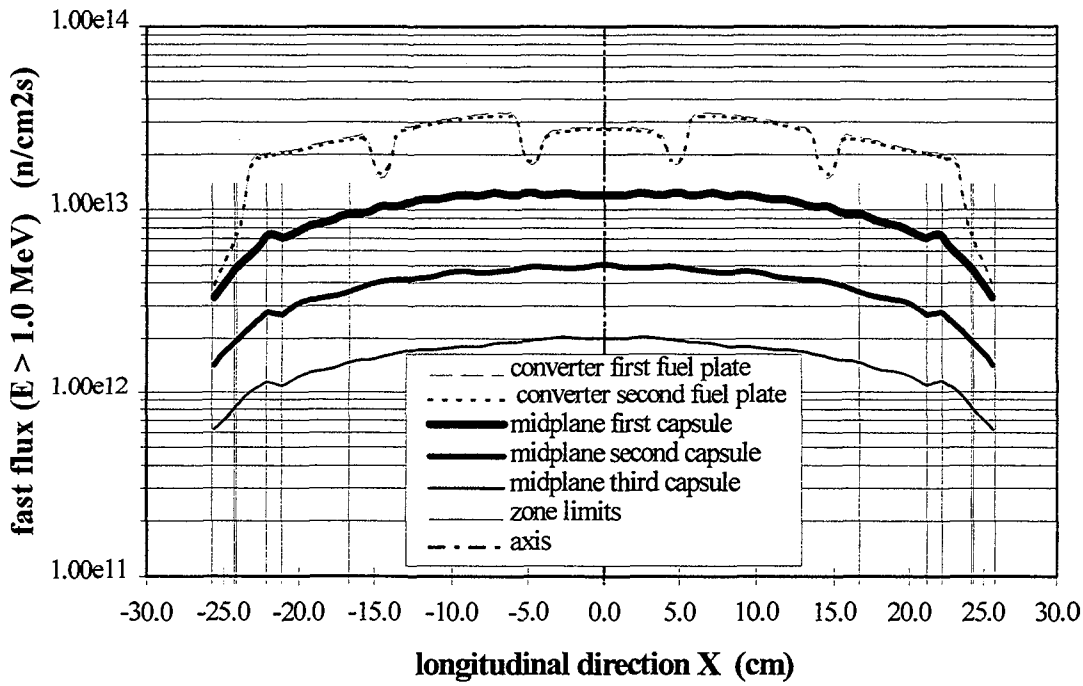

Fig. 4 Longitudinal (X) distribution of the fast fluxes (E > 1.0 MeV) in the converter fuel plates and in the three capsules (same X scale as in Fig. 3).

The BR2 fuel element loading has to be extended towards the location of the pool side irradiation facility, i.e. as far as channels K191 and K169, or as channel L180 (see Fig. 3). In order to flatten the flux distribution in the longitudinal (X) direction, the quantity of fuel in the central double fuel plate stack of the converter was decreased.

5. Results and Calibration

The results of the optimisation process led to the final converter design. The data presented in Table 1 were obtained for a converter composed of five vertical double fuel plate stacks presenting a total width of 485 mm, each plate having a meat thickness of 1.27 mm and a density of 1.18 g $^{235}U/cm^3$ (except in the central double fuel plate stack). The fast fluxes are the longitudinal-direction-averaged values in the capsule midplanes and correspond to Fig. 4, resulting from a two-dimensional neutron calculation. The gamma heatings result from one-dimensional gamma calculations and correspond to the axis of the capsules. The water gap between the converter fuel plates is 2.2 mm .

		first capsule	second capsule	third capsule
Fast flux (E > 1.0 MeV)	$10^{12} n.cm^{-2}.s^{-1}$	11.6	4.5	1.8
Gamma heating	W/g	0.65	0.16	0.06

Table 1. Fast neutron fluxes and gamma heatings as calculated for the MERLIN pool-side facility (values in the BR2 reactor axial midplane).

These results will be checked when realizing a mock-up, including a full dosimetry with a dummy capsule, before starting the irradiation programmes.

6. Conclusion

As a result of the design optimization, a typical programme including three loaded capsules could be achieved within 124 days of irradiation. It would contain up to 900 charpys or 60 1T-CTs. As the three capsules can be placed in each of the three irradiation positions in the facility and rotated over 180°, the homogeneity of the neutron doses will be very high (almost flat). Moreover, by adapting the BR2 loading in the vicinity of MERLIN and choosing adequately the position of the facility (near or further away from the reactor vessel), a wide range of neutron flux amplitudes will be available. By adopting a pool type facility SCK•CEN will hence be able to run flexible programmes in relevant neutronic and thermal conditions, manipulation of the capsules in the facility not interfering with BR2 operation.

7. References

[1] K.D. Lathrop. "DTF-IV, a FORTRAN-IV Program for Solving the Multigroup Transport Equation with Anisotropic Scattering". LA-3373. Nov. 1965.

[2] G. Minsart, G. Peperstraete, G. Van Roosbroeck, J. Daniels, D. Christyn de Ribeaucourt, F. Bosmans. Internal Reports SCK•CEN, Mol. 1971 ... 1976.

[3] P. Vandeplas, J.-C. Schepers. "MOL-BR2-4OGR, a Forty Group Cross-Section Library for the Calculation of Fast-Thermal Systems". Internal report SCK•CEN, Mol, Dec. 1971.

[4] - W. A. Rhoades and R.L. Childs. "The DORT Two-Dimensional Discrete Ordinates Transport Code", Nuclear Science and Engineering 99, 1, pp. 88-89, May 1988.
- DORT-TORT, Two-and Three-Dimensional Discrete Ordinates Transport Version 2.7.3 RSIC report CCC-543.

CH0100327

RESEARCH REACTOR BACK-END OPTIONS - DECOMMISSIONING: A NECESSARY CONSIDERATION

M. R. ENGLAND, D. R. PARRY AND C. SMITH
Waste Management and Decommissioning
BNFL, Sellafield, Seascale, Cumbria, CA20 1PG - UK

ABSTRACT

Decommissioning is a challenge which all radioactive site licensees eventually need to face and research reactors are no exception. BNFL has completed numerous major decommissioning projects at its own operational sites and has undertaken similar works at customers' sites including the decommissioning of the Universities Research Reactor (URR), Risley and the ICI TRIGA Mk I Reactor at Billingham.

Based on the execution of such projects BNFL has gained an understanding of the variety of customer requirements and the effectiveness of specific decommissioning techniques for research reactors. This paper addresses factors to be considered when reviewing the way forward following shut down and how these affect the final decisions for fuel management and the extent of decommissioning. Case studies are described from BNFL's recent experience decommissioning both the URR and ICI TRIGA reactors.

1. Introduction

It is inevitable that all Research Reactors will, at some time, reach the end of their useful life. This may arise for a number of reasons including commercial viability, regulatory or environmental pressure, technical alternatives and fuel issues but will result in the same fundamental question - what next ?

There are numerous factors that need to be considered before making a final decision with one of the main issues being management of the spent fuel. Spent fuel management can become an issue long before the end of a reactor's operating life but becomes unavoidable once a decision to decommission has been taken.

This together with remaining activities on the site, disposal of waste arisings, care and maintenance costs etc. all give rise to an involved and complicated decision making process. Even if the path of decommissioning is opted for this still gives rise to the question - to what stage ?

2. Decommissioning Options for Research Reactors

Once the decision has been made to shutdown the most appropriate programme of actions needs to be selected based upon the particular circumstances. Often the issues will have already been addressed in making the decision to shutdown. The major factors are:

- the licensee's requirements for future use of the site
- the regulator's requirements and local environmental constraints
- disposition options for the fuel
- disposal options for waste
- costs of care and maintenance versus dismantling
- availability of experienced operations staff

The options available fall into a few broad categories which are listed in the table below together with the impact of the above factors:

OPTION	FACTORS
Do nothing	Defuelling will normally be the minimum requirement of the regulator in order to reduce the radioactive inventory. This may be a routine operation or may require special arrangements which could be economically adapted for waste removal.
Defuel only	After defuelling the remaining radioactive inventory will require care and maintenance, the cost of which needs to be balanced against the cost of dismantling. Regulatory involvement will still be required although eventual decommissioning will be facilitated by radioactive decay. One of the key factors for prompt decommissioning is the future availability of reactor personnel to assist with the decommissioning operations retaining important knowledge within the project team.
Remove all active components leaving the bioshield in place	This will again require continuing care and maintenance and approval by the regulatory authorities. The driver to cease at this stage will be if the remainder of the site is still to be utilised for radioactive operations.
Return to greenfield site	All activity needs to be removed from the site in totality i.e. drains, vent systems, fume cupboards, hot cells etc. Benefits are the realisation of any capital associated with land ownership and complete removal of an uncertain liability. The further down the road of decommissioning a project is taken lower the remaining liability on the operating organisation.

Fuel and waste management options range from engineered storage solutions at the reactor site to use of large scale storage and processing facilities such as those at BNFL Sellafield or flexible small scale reprocessing facilities as at the UKAEA Dounreay site.

When deciding the viability of fuel management and decommissioning options, determining the realistic costs of the various options available is an important step. It is also important to initiate discussions with the appropriate regulatory authority as soon as possible. Feasibility studies can be initiated which may include a value engineering process to determine the optimum solutions and associated cost to the Licensee.

3. Development of decommissioning within BNFL

BNFL was formed in 1971 from the operations group of the UKAEA which had previously controlled all nuclear power development and operations work at UK nuclear research and fuel cycle sites. BNFL took over responsibility for the "production" parts of the former UKAEA including fuel manufacture at Springfields, uranium enrichment facilities at Capenhurst, reactor operations at Calder Hall and Chapelcross and spent fuel management and plutonium fuels production at Sellafield.

The facilities managed by BNFL at its operating sites range from those which supported the operation of the Windscale Piles in the 1950s, through to the latest fuel manufacture, spent fuel management and waste management facilities. Operations, care and maintenance, post operational cleanout and decommissioning of the older facilities are all problems managed by BNFL as owner and operator of the sites. BNFL has completed major decommissioning programmes across the full range of nuclear fuel

cycle facilities from enrichment and plutonium fuel manufacturing plants through to highly active reprocessing and waste management facilities.

By the late 1980s BNFL had developed sufficient experience and expertise in nuclear decommissioning to be able to offer its services outside of its own sites to other nuclear site operators both within the UK and elsewhere across the world. Based on the experiences gained on four licensed sites BNFL are able to accurately assess the costs associated with decommissioning and are well placed to undertake similar projects on other operators' sites. The following case studies describe how BNFL has approached the different requirements for decommissioning of two UK research reactors which have reached the end of their useful lives.

4. Case Study 1 -Universities Research Reactor (URR)

The Universities Research Reactor (URR) was located near Manchester, in the UK and was used for post-graduate training and research including nuclear engineering, radio-chemistry and neutron and solid state physics.

The Argonaut type water moderated, water cooled reactor, originally designed for continuous operations at 100kW, was commissioned in July 1964 with the operating power increased to 300kW in 1966. The reactor was shut down in 1991 and BNFL were contracted to decommission the reactor and dispose of all waste, returning the site to 'green field' status and revoking the nuclear site licence.

Defuelling
As part of the final reactor operations the fuel was removed from the core and placed in the dry on-site storage pit. The only suitable transport flask available was designed for filling underwater and as there was no fuel pond at the reactor facility, a temporary extendible pond arrangement and a purpose built shielded transfer machine were designed and installed.

The fuel transfer was completed successfully with the fuel leaving the site in December 1992. During the transfer operation no measurable radiation doses were received by the workforce, nor was there any measurable contamination on any of the equipment used.

Pre-Decommissioning Safety Report (PDSR)
The PDSR examined the proposed decommissioning operations and described the plant and operational programme with emphasis on safety management. The PDSR was presented to the University Nuclear Safety Committee and HM Nuclear Installations Inspectorate (NII) for approval, following which NII requested the use of hold points to allow a review of work completed before proceeding to the next stage. The detailed dose assessment predicted that with strict planning and control, the individual dose limit of 10mSv/year would not be exceeded within a predicted collective dose uptake of 79.6mSv.

Preparatory Work
Preparatory operations included modification to the changeroom and access routes, allocation of an area for the storing ISO skips for Low Level Waste (LLW) and, because of limited overhead crane capacity, the provision of an airlift transporter system.

32 peripheral shield blocks, which had been identified as Free Release Material (FRM), were removed from the reactor increasing the working area and allowing access to the neutron source which was withdrawn and placed in a shielded transport container. A Reusable Modular Containment (RMC) designed to enclose the reactor and process pit was installed over the top of the reactor. The metal panel roof of the RMC, incorporated an array of hinged panels to provide access for the overhead crane, a changeroom with barrier for controlled man-entry, and an air lock for the transfer of goods and materials. The RMC was fitted with a dedicated ventilation system which included a double pass HEPA

filter system and a proportional sampler downstream of the filters to estimate aerial discharges during decommissioning.

The project team undertook a comprehensive series of training courses arranged by BNFL Training Department over a three week period. Training remained an important part of the work throughout the project with the use of 'mock ups' before tackling problems with potentially high radiation levels.

Reactor Dismantling
The removal of the control blade mounting frames was expected to be the most dose intensive operation of the decommissioning programme and in order to size reduce and minimise handling problems associated with this highly active steelwork (approaching 200mSv at contact), a milling machine was designed, developed and tested. The swarf produced was transferred, by way of a conveyor system, directly into an ILW flask liner.

To remove the Primary Thermal Column (PTC) additional concrete shielding was designed and cast and removal of the PTC graphite blocks was achieved with relatively low dose uptake. Removal of the reactor core graphite blocks was hindered by the rabbit tubes and interlinking fuel boxes which were mounted on a steel frame cast into the concrete foundations constituting a major radiation source. The shielding used for the PTC was retained and the blocks were withdrawn out of the core remotely. The control blade shrouds and six fuel boxes were progressively broken free and removed. The frame was then released using a hydraulic bursting tool, allowing it to be lifted to a shielded area for waste categorisation.

Three Beta in Air monitors were in constant use during all the work within the RMC. Although respiratory protection was routinely worn whenever there was a risk of airborne contamination, the monitors never reached their alarm setting.

The reinforced concrete monoliths were progressively broken up using a diamond drilling/hydraulic bursting technique. Accurate assessments of the free release boundary were determined from radiological analysis of core samples. The active and non active wastes were segregated to minimise active waste costs. All activated service pipes and concrete associated with the reactor foundations were progressively removed with the strategic use of temporary shielding and remotely operated drilling/bursting equipment. When all peripheral equipment had been removed the RMC was decontaminated and dismantled.

Demolition Of Buildings And Clearance Of The Site
Prior to demolition the building was subjected to a comprehensive independent survey to ensure that there was no remaining measurable radiological material which might cause problems during the work itself and/or subsequent disposal of waste. Demolition commenced in August 1996, following authorisation from the NII, and was completed two months later. Each load of demolition waste was monitored prior to removal from site and removal as free release material.

After all materials used in the construction of the reactor had been removed from the site, a final radiological survey was undertaken. This included radiation field measurements and analysis of samples of surface and subsoil with emphasis on areas immediately below the reactor foundations. These measurements provided the final verification that, beyond any reasonable doubt, there was no residual radiological hazard associated with the site due to the operation of the Universities Research Reactor, which should restrict the site's suitability for development.

Dose Control
Individual dose uptake was minimised throughout the project by careful analysis of methods, use of mock ups, specific training and close supervisory control of operations. Careful records were maintained of the cumulative individual and task dose uptakes. These records were continuously compared with the predictions made in the PDSR and were monitored by the NII.

In summary:

- total collective dose accrued was 62mSv against a predicted 80mSv
- highest individual dose accrued was 8.5mSv against an annual limit of 10mSv

Conclusion

Following confirmatory radiological surveys, notification ending the Universities' period of responsibility was received on 26 July 1996 and the Universities finalised the sale of the land to a private developer who has constructed a distribution warehouse for a large computer company.

5. Case Study 2 - ICI TRIGA Mk1 Reactor

The ICI TRIGA reactor is located near Middlesborough, in the UK and was operated commercially for irradiation of specimens and production of tracers.

The Mk 1 TRIGA is a pool reactor which operated at 250kW, using a zirconium hydride ceramic fuel containing 8.5wt% uranium at 20% enrichment. It was commissioned in 1971 and operated until 1996. BNFL have been awarded a contract to defuel the reactor and remove the activated components, leaving the reactor vessel and concrete containment intact. The reactor building will continue to be used for radiochemical operations so there is no requirement to de-license the site.

The decommissioning methodology has been considered in four stages as described below:

Stage 1 - Preparatory Works

A number of decommissioning schemes were assessed in order to determine the optimum methodology for decommissioning the ICI TRIGA Reactor. Design concepts were developed in parallel with the production of radiological, criticality and industrial safety assessments. A Pre Decommissioning Safety Report was prepared to encompass all operational aspects of the reactor decommissioning. This was submitted to the ICI Nuclear Safety Committee and the NII for approval.

The preparatory works included civil improvements to the building structure, provision of cranage and extended changeroom facilities. The cumulative dose assessment predictions for all decommissioning operations is 20 man mSv

Stage 2 - Reactor Defuelling

The reactor will be defuelled utilising a cylindrical transport flask (Modular Flask) positioned directly above the reactor tank. A support frame has been manufactured to provide secondary support to this flask in addition to a mobile crane. This support frame will also provide shielding in the form of a steel and lead collimator which will extend one meter into the reactor tank water. The fuel will be loaded into a purpose built fuel transport basket, positioned on an in-tank aluminium frame located next to the reactor core. The basket, containing 13 fuel elements will be hoisted directly into the transport flask for shipment to UKAEA Dounreay for reprocessing. The reactor presently has an inventory of 86 fuel elements and three control rods - hence seven transport shipments will be required.

Stage 3 - Intermediate Level Waste (ILW) Removal

The components of the reactor which constitute ILW are the stainless steel items positioned close the reactor core. These consist primarily of research equipment such as the Rotary Specimen Rack and Argon activation vessels.

A dedicated shielded container has been designed and built for the purpose of removal and disposal of this waste. The container, consisting of steel and lead shielding, will be positioned on the in-tank frame located next to the reactor core. ILW will be loaded into this container following remote size reduction by hydraulic croppers. The package will then be grout filled utilising technology developed for use in the Sellafield waste storage plants, to ensure that free liquids are not consigned to the waste store.

The support frame positioned above the reactor tank will be complemented by the addition of a transfer shield. The grouted container will then be removed from the reactor tank using a mobile crane. During removal, the container will mate with the transfer shield to allow safe movement of the package to a transport flask (Unifetch Flask). This waste will then be transferred to Sellafield for interim storage pending ultimate disposal.

Stage 4 - Removal of Low Level Waste (LLW) and Reactor Ancillary Equipment
The remaining waste consists mainly of the aluminium clad graphite reflector, primary and secondary cooling systems and experimental facilities such as rabbit systems etc. These will be dismantled and placed directly into a $10m^3$ ISO skip for grouting and disposal to the Drigg Low Level Waste Repository.

The decommissioning operations will conclude with a detailed radiological survey of the reactor tank, containment and building. The results of this survey will determine the need for further work, although it is anticipated that the water will be disposed of via the existing active drain followed by a permanent cover being installed above the reactor tank. A care and maintenance regime with then be operated pending the clients decision to de-license the reactor site.

Current Status
The fuel and waste routes have been identified and agreed. All safety and operational documentation has now been prepared. Design, manufacture and inactive commissioning of the dedicated decommissioning equipment is now complete. Formal agreement from the NII to proceed with Stages 1 and 2 has been received. Active commissioning and site operations are due to commence mid 1998.

6. Regulatory issues

The major regulatory bodies involved in both cases were Her Majesties Nuclear Installations Inspectorate and the Environment Agency (formerly HM Inspectorate of Pollution). The NII were involved in all aspects of the decommissioning programme: their agreement was necessary before any major stages could proceed. Authorisation from the Environment Agency was also required for all activities involving the transportation and/or disposal of solid, liquid and gaseous wastes.

7. Conclusions

With the projects currently completed or underway BNFL has successfully demonstrated that

- reactors of this size may be safely decommissioned soon after shutdown;
- technology is available to overcome all the problems associated with this type of decommissioning;
- with careful management and control, dose uptake can be minimised and kept well below current requirements;
- the cost to the operator of decommissioning and waste disposal is offset by costs that would be incurred in care, maintenance and regulatory costs;
- capital assets associated with land ownership may be recovered by the operator with the sale and/or subsequent development of de-licensed sites.

FOOTNOTE

BNFL have recently secured a contract to decommission TRIGA Mark II and III Reactors in South Korea. Teaming with Hyundai, we will provide technical and project management services to the Korea Atomic Energy Research Institute (KAERI). The scope of work is to provide design, supervision and safety assessment services to allow for the successful decommissioning and delicensing of the two reactors during the next two years.

Session 2:

Fissile materials supply, fuel fabrication and licensing

CH0100328

REVIEW AND SUMMARY OF RERTR* 1997

W. Krull
GKSS-Forschungszentrum Geesthacht GmbH
Max-Planck-Strasse
D-21502 Geesthacht - Deutschland

ABSTRACT

The 1997 RERTR meeting was the XX. annual meeting. Time to review the status of the program and to ask for and to discuss the planned RERTR program speed. After years of agony there is still not a sufficient activity in conversion studies and conversion of research reactors. But the absolutely necessary flanking measures for convincing operators converted their reactors that they are not sitting alone in the rain are very satisfying e.g. the take back program of US origin fuel (free of charge for low income countries) is a great push forward, the development of higher density fuel allows reactor operators converted already to believe that they are not the only one to pay the penalties, the development of fuel for Russian reactors must be followed by a similar take back program to reduce the stockpiles. The light is being switched on again on this program.

1. Introduction

The first RERTR meetings started during the series of INFCE** conferences which terminates early 1980 with conclusions agreed by many countries. The RERTR program started with strong efforts, interesting goals, excellent support and convincing results within the first 7 to 8 years. Activities mainly undertaken at the beginning by US organizations have been followed to an important extent by France, Germany, Japan and others and the IAEA.

Then after reaching the first milestones successfully (4.8 g U/cc qualified) the all over the years still existing opposition was taking the chance and slowed down the program close to zero for nearly 10 years. The again changing understanding upon the needs of enrichment reduction leads to a second spring of the program. The present situation in conjunction with the anniversary is believed to be a good occasion to review the status and the planned activities of the RERTR program.

2. RERTR 1997 - General overview

The 1997 XX. RERTR meeting at Jackson Hole, Wyoming, USA, was at a very interesting site, organized in a professional way including some small difficulties, typical, when it is believed to be a routine job and with warm overwhelming hospitality. All attendees and their spouses will have it in good remembrance when waiting for the next great events: the XXV., XXX. or other anniversaries worth to be celebrated.

Beside this the XX. RERTR meeting was top on the number of 182 attendees, from 20 countries and two international organizations (88 US, 22 Russia, 15 Germany, 12 France, 7 Japan, 7 Canada and others) and the number of 60 papers being presented. A breakdown of these papers by topics shows:

- 2 national programs
- 14 reactor conversion and conversion studies
- 21 fuel development and fuel tests
- 2 new LEU reactors
- 4 Mo-99 with LEU targets
- 13 spent fuel management and shipment

*) Reduced Enrichment for Research and Test Reactors
**) International Fuel Cycle Evaluation

- 1 reprocessing
- 3 general

3. RERTR - Historical remarks

RERTR is not a task in itself and it is not like other meetings discussing new developments in e.g. membrane technology in separating different gases. RERTR is the outcome of serious international concerns in the seventieth on the spread of nuclear weapons technology and the availability of usable fissile material for such projects. Therefore under the auspices of the UN the IAEA was organizing for more than two years conferences and a series of meetings of different working groups to analyze the situation and to define the - at that time - most promising way to minimize the proliferation risk in reducing e.g. the availability of fissile material above a given percentage of 20 % (Working Group 8c of INFCE).

Some of the conclusions drawn in 1980 at the last INFCE conference have been e.g.

"were convinced that effective measures can and should be taken at the national level and through international agreements to **minimize the danger of proliferation** on nuclear weapons **without jeopardizing** energy supplies or the **development of nuclear energy for peaceful** purposes".

"**Proliferation resistance** can be increased by:

(1) **Enrichment reduction preferably to 20 %** or less which is internationally recognized to be fully adequate isotopic barrier to weapons usability of U-235;

(2) **Reduction of stockpiles** of highly enriched uranium:

(3) **Reduction of the annual production of fissile materials in research reactors**, although attainment of weapons-usable material would require spent fuel reprocessing. For example, for some research reactors fuelled with natural uranium the proliferations resistance might be improved by utilizing slightly enriched uranium, which reduces the annual plutonium production.

It must be stressed that in an overall assessment of the **proliferation resistance and safeguard** of a particular research reactor, it is necessary to **consider all of the above factors.**"

"In Assessing the **practical feasibility of utilization lower enriched fuel** in existing research reactors, the agreed criteria are that safety margins and fuel reliability should not be lower than for the current design based on highly enriched uranium and that neither **any loss in reactor performance, e.g. flux-per-unit power, nor any increase in operating costs should be more than marginal.**"

"The **delegates recognized the central role that the IAEA** has played in the past and must continue to play in the future in meeting the problems that were the focus of the INFCE study."

4. RERTR in the eightieth

The task to follow the INFCE conclusion has been taken over at that time by all countries being involved in the INFCE program. This program starts in the early eightieth with energy, money, man power, political pressure and believe in working on the right topics to reduce the proliferation risk. Therefore after a few years (1985/1986) new high density U_3Si_2 fuel with 20 % enrichment, 4,8 g U/cc has been qualified to allow in principle to convert the majority of research reactors in the world with only a few exceptions. But at that time the difficulties in implementing the new qualified LEU fuel became more and more important, and people lost their believe that **enrichment reduction is a task for all in a fair and equitable way as**

- Development of higher density fuel stops and neutron flux and economical penalties have been taken over only by converted reactors and became significant important
- No fuel development for Russian fueled reactors was being made, so that large quantities of HEU remain in the fuel cycle
- US were delaying or more or less not converting US reactors and not following their own demands given in Fed. Reg. Notes in 1984 and 1986 for so called "unique purpose reactors"
- The return of spent fuel of US origin to DOE sites was stopped for years (from 1989 to 1996). This was a key problem for non US operators of research reactors

- US politics (the Shumer act) discriminates non US reactors in a non acceptable way by allowing only U-exports if there is a program for higher density fuel which was stopped by US politics. Therefore no HEU exports occured and non US reactors had been drained out. They are looking at other suppliers. Even the NCI* in Washington does not support these politics today.
- University of Munich decided to build its FRM II with HEU and US-DOE considers over years to build the ANS with HEU against more and more national and international protests. This undermines RERTR goals.
- Internationally closed eyes in considering really the amount of fresh fuel available at the facilities and the spread of this fuel over the world. Remember that e.g. spent fuel is to be considered fresh fuel if the radiation dose is below 1 Sv/h in 1 m distance in air. Large amounts of such fuel exists in many countries.
- IAEA starts to become an observer and was not playing any longer a central role.

This situation remains more or less for nearly ten years. Letters from RERTR conferences to two US-Secretaries of Energy and to US-President Clinton were necessary beside many other actions (letters to the Director General of the IAEA, to the Russian Ministry of Atomic Energy, a group of reactor operators starting strong discussions with US-DOE and preparing a legal case) to recover the RERTR program from agony to have it alive again. This above mentioned situation is the reason why after 20 years the political goal to implement the enrichment reduction worldwide to nearly 100 % is not being reached and it will take probably more than a decade from now to bring it to a real success.

V. Where we are and where to go

Recovering from agony and now seeing the old people with fresh energy and blood there has been within the last two years a significant number of different areas with good progress, but at the same time other areas are still without necessary actions. This is the typical double face situation of this techno-political program.

The large US delegation at the XX. RERTR meeting was mainly not only there for US-domestic reasons. People were and can be proud upon the tremendous progress in some major areas.

- The spent fuel return of US origin fuel for 10 (13) years up to May 2006 (2009) is for MTR type fuel a well established program with shipments till yet from Europe, South America, Asia (Sweden, Denmark, Germany, Greece, Switzerland, Spain, Columbia, Chile, Japan, Italy) now being made successfully on a very routine, high professional basis. To have these shipments going by far more paper work and specific control at site of the status of the spent fuel elements intended to be shipped have to be performed. But all of this has been made extremely successful. All our thanks have to go to all people involved from DOE Headquarters and Savannah River Site, SAIC, Westinghouse, transport companies and licensing organizations. The licensing organizations for the cask license revalidations in different countries are playing more and more a key role to have the shipments going within the schedules. The second weak point was and is still the availability of licensed casks especially for Triga fuel.
- The first shipment of spent Triga fuel has been scheduled for this spring. But due to the present litigation in California which may affect all of the shipments of Triga fuel to Idaho the first Triga shipment from Europe is being postponed and may happen hopefully next year. This litigation can influence the MTR spent fuel shipment to Savannah River Site, too?
- US-DOE starts 1.5 years ago with a new 5 years program for the development of higher density fuel (up to 9 g U/cc) which allows all research reactors to convert to LEU or to go down with their enrichment to an intermediate level as demanded already in Fed. Reg. Notes in 1984 and 1986. Fuel testing starts last year with a screening test of twelve different U-alloys/compounds to select a number of these U-alloys as candidates for higher density fuel. In addition CERCA starts with a smaller budget with two U/Mo-alloys the development of high density U/Mo fuel, too, which shows very interesting development possibilities. This development is mainly being made for the French 100 MW materials testing reactor project JHR, which is intended to use LEU from its startup in 2005.

*) Paul Leventhal, Nuclear Control Institute, Washington, D.C.

An estimation made - not given by US representatives - shows that the higher density fuel is believed not to be qualified before the end of the year 2002 to allow conversion of the unique purpose reactors at that time.

- The US take back program for US origin fuel is a very important input to continue to implement RERTR in many countries. This program offers to low income countries the free of charge return of their HEU and LEU (spent and fresh) to the US. This is at the moment a great chance to many of these countries and will be taken by a large number. The take back program and the free of charge return for these countries is at the moment internationally without any comparable option for other countries having non US origin fuel. Other countries selling U to research reactors like China, France, United Kingdom and Russia are not offering a comparable solution. UK, France offering some reprocessing services with take back necessity of all reprocessed materials and waste and everyone has to pay for all services.

  Especially Russia has been asked by letters from the IAEA and a large group of operators using Russian origin fuel for a similar (like US) take back program of spent fuel. They are still waiting for a reply.

- Conversion studies for reactors are on the way for a few more reactors and - this is really new - for some DOE reactors. But for many, many reactors these studies are missing even for those the US Fed. Reg. Notes published in 1984 and 1986 demanding for like the so called unique purpose reactors. Very typical for this situation is, that within the large group of US participants at the RERTR meeting the US reactor operators were negligible.

- New reactors in Thailand, France and Australia will be or are designed to use LEU. Especially the French JHR with 100 MW power is a real push for the future RERTR activities. This demonstrates that France is willing beside the CERCA fuel development to accept the INFCE demands including the large flux and economical penalties involved with the operation of such high power reactor with LEU fuel.

- The decision of the university of Munich around 1985, when the LEU silicide fuel with 4.8 g U/cc was close to be qualified, to go ahead with the design of the FRM II with HEU fuel is still a clear challenge for the RERTR activities and is undermining the progress and pressure on others. It is very difficult to convince people to convert an existing reactor taking a lot of penalties when a new one is not willing to take the same burden. One of the major reasons for this situation is for me the US-policy over the years studying the ANS with HEU and not converting more or less US domestic reactors over many, many years. The US must know, that the best way to convince people is not by making pressure. It is by far better in giving good examples.

  The possible design of the FRM II with LEU fuel has been discussed again at the XX. RERTR and it seems to be accepted today by the FRM, too, that this reactor can be build with present qualified LEU and operated with the same safety margins. To achieve the same neutron flux the power must be increased by 60 % and the fuel cycle costs will be higher. This means on the other hand if the FRM II is being operated with LEU and stays at 20 MW there will be a reduction by approx. 37 % in flux. Others converting their reactor have to take or taken already a penalty of up to 20 % in neutron flux.

- LEU targets for Mo-99 have been tested and it is being expected that these targets will be qualified for use in approx. two years from now.

- For research reactors operated in Russia and in other countries using Russian fuel a fuel development and testing program is now under way for UO_2 fuel with densities up to 3.85 g U/cc. At the moment many of the test plates failed and PIE´s are under way. As the density is close to the fabricational limits some improvements are believed to be necessary. The US offered to give their knowhow on silicide fuel fabrication - which is being qualified up to 4.8 g U/cc* - free of charge to Russia. But still yet no tests are being performed for silicide fuel. Therefore conversion plans for Russian fueled research reactors are not on the table till yet.

- US / Chinese cooperation contract was signed but nothing was told upon any work progress.

*) The Russian tests are staying only on UO_2 fuel. Within the RERTR program there has been tested UAl_x, U_3O_8, U_3Si-Al, U_3Si_2 to the limits of fabrication already in the eightieth!

- The activities of the IAEA are mainly observing. The IAEA has a good chance to play a central role - as demanded for by the INFCE conclusion - in updating periodically the international status and progress (success) of this UN program to reduce the proliferation risk. To show the ups and downs will be very convincing for the whole RERTR program.

6. Conclusion

The RERTR program recovered from agony and is being stimulated by important activities:

- US take back program of US origin fuel
- Program for the development and the qualification of high density fuel in the US and at CERCA
- French JHR 100 MW reactor design with LEU fuel
- Conversion studies for more US reactors including DOE operated reactors
- Test of Russian UO_2 fuel with medium densities
- Tests of LEU targets for Mo-99 production
- US / Chinese coorporation

But there are a number of major stones on that way:

- FRM II with HEU
- Relatively low activities in converting US reactors
- No similar take back program for Russian origin fuel
- The Russian fuel development program is fixed only on one fuel (UO_2)
- US is not following their own Fed. Reg. Notes from 1984 and 1986
- IAEA should play a more central role in presenting periodically the international status and progress of this program.

There is some justified hope that this second spring of the RERTR program will last so long that the goals formulated in 1980 can be reached mainly within the next decade. But this depends strongly on the way in trying to implement the enrichment reduction at the non converted facility:

- high pressure and the sword is not the right way
- only giving examples by oneself is the way to convince people upon the necessity of the way they should follow.

There is still some hope, that the RERTR program will be a fair program and handled for all research reactors worldwide in an equitable way.

CH0100329

DESIGN AND PRODUCTION PROCESS OF BUSHING -TYPE FUEL ELEMENTS (FES) FOR CHANNEL RESEARCH REACTORS

V.L. AFANASIEV, A.B. ALEKSANDROV, A.A. ENIN
NZHK, Bogdan Khmelnitsky Street.,94, Novosibirsk, Russia

ABSTRACT

The design of bushing-type fuel elements (FEs) based on the dioxide fuel composition UO_2+Al for channel research reactors is described.
*Commercial technological process for bushing-type FEs with up to 0.8 g/cm^3 uranium con*centration in the fuel core is presented. This technology is based on fuel core production using powder metallurgy with subsequent chemical treatment of its surface and enclosing into the finished cladding.
Commercial technological process for bushing-type FEs with 0.8-3.8 g/cm^3 uranium concentration in the fuel composition is considered. This process is based on fuel core production by means of extrusion technology followed by fuel core enclosing into the cladding.

Design and production process of bushing - type fuel elements (FEs) for channel research reactors

"Novosibirsk Chemical Concentrates Plant"(NZHK) is a manufacturer of nuclear fuel - Fuel Elements (FEs) and Fuel Assemblies (FAs) - for power, pulsed, industrial and research reactors.
NZHK supplies 56 FA modifications for thirty pool and channel research reactors built according to the Russian projects.
FAs with seamless tubular FEs inserted into each other and positioned in axial alignment are most widely used. The example of IRT-3m FA for IRT-M and IR-8 pool research reactors is presented in Fig.1.
FEs used in the mentioned FA (See Fig.2) are manufactured by extrusion process (by means of technology of hot coextrusion of tubular fuel core billet and ring-shaped aluminium hollow cylinder). Metal-ceramic (UO_2+Al) fuel core is used as FE middle layer; aluminium alloy claddings are used as peripheral ones.
The above-mentioned FEs and FAs are used in research reactors with the reactor core height equal to metal-ceramic FE core.
However, the types of channel research reactors are available in which the reactor core is formed by FAs positioning into one another in the channel tube, e.g. "RA" reactor (Yugoslavia, Belgrad, VKI).
FA and FE design for such reactor types shall provide for the uniform uranium distribution along channel height (reactor core height).
TRW-S FA (this FA consists of one FE, an ejector and spacing sprockets) providing for the minimum clearance between the FE cores and the required uranium distribution uniformity along its height in the reactor channel is presented in Fig.3. The ejector forms the coolant flow passing over the FE internal cladding. The sprockets secured on the ejector provide for the guaranteed clearance between the ejector and the FE, between the FE and the smooth surface of tubular reactor channel.
Fuel Element consists of tubular fuel core enclosed into the aluminium cladding hermetically sealed by annular weld seam.

Manufacturing process for the mentioned fuel elements is shown on the flow-chart (Fig.4) and it comprises the following steps:

- manufacturing of aluminium ring-shaped billet of the cladding;
- manufacturing of tubular metal-ceramic fuel core;
- assembly of the aluminium cladding billet with the fuel core;
- cold calibration of assembly;
- rolling down the open end of the aluminium cladding billet;
- FE hermetical sealing by annular weld seam;
- FE high-temperature gas reduction.

Uranium dioxide (UO_2) produced at our enterprise using the manufacturing process which flow-chart is shown in Fig.5 is used as source material for metal-ceramic fuel core. Use of uranium containing FE production wastes as a source material for uranium dioxide fabrication makes the manufacturing process of FEs on the basis of UO_2 practically wasteless.

Cold calibration of the assembly of the aluminium cladding billet with the fuel core and its high-temperature gas reduction provides for high-quality diffusion adhesion between the aluminium cladding and the metal-ceramic uranium core.

Small fuel core deformation in operation "Cold calibration of the assembly" makes it possible to obtain the stable length and the uniform fuel core geometry in the finished FE.

The above-described manufacturing process of bushing-type FEs provides for high quality and reliability of FEs with up to 0.8 g/cm^3 uranium concentration in the fuel core; this is confirmed by many years experience of operation of FA with 80% and 90% enriched U-235 fuel.

During "RA" research reactor conversion to the fuel of lower enrichment (36%) it was necessary to increase the uranium concentration in the FE core. The above-described technology using this concentration can't provide for the required level of diffusion adhesion between the cladding and the FE core.

Therefore, a new technology (its flow-chart is shown in Fig.6) has been developed and mastered at NZHK.

This technology differs from the earlier described in that the FE core is manufactured using the extrusion technology elements, such as:
- separate fabrication of a ring-shaped hollow cylinder from the cladding material, the aluminium plug and the metal-ceramic uranium tube piece;
- assembly of the ring-shaped hollow cylinder with the aluminium plug and the metal-ceramic uranium tube piece;
- hot coextrusion of the three-layer tube;
- cutting the three-layer tube into the fuel cores.

FE cores manufactured using the described operations are covered with a thin (0.2-0.3 mm) aluminium layer (it is called "dummy cladding") having an excellent adhesion with the metal-ceramic uranium composition. The subsequent FE manufacturing operations are as follows:
- assembly of the aluminium cladding billet with the FE core;
- cold calibration of the assembly;
- rolling down the open end of aluminium cladding billet;
- FE hermetic sealing by annular weld seam;
- FE high-temperature gas reduction

These operations are similar to the ones used in the manufacturing process of bushing-type FEs without "dummy cladding"(See Fig.4).

The suggested commercial technology provides for the following: high-quality diffusion adhesion between the FE core having a "dummy cladding" and the FE cladding; the required FE core geometry. This technology can be used for manufacturing of FEs with 0.8-3.8 g/cm^3 uranium concentration in the fuel core.

The described commercial manufacturing processes of bushing-type FEs for channel nuclear reactors guarantee FE high quality and operational reliability.

8 FUEL ELEMENT FA OF IRT-3M TYPE FOR NUCLEAR RESEARCH REACTOR

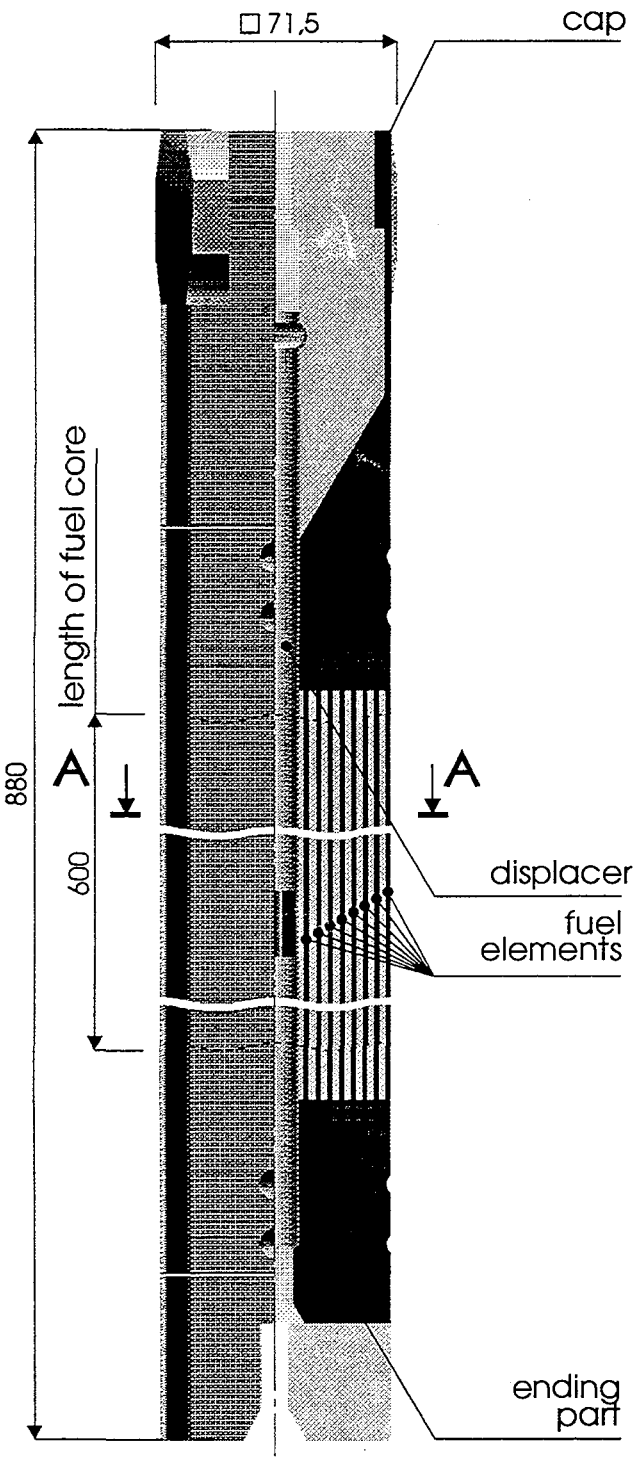

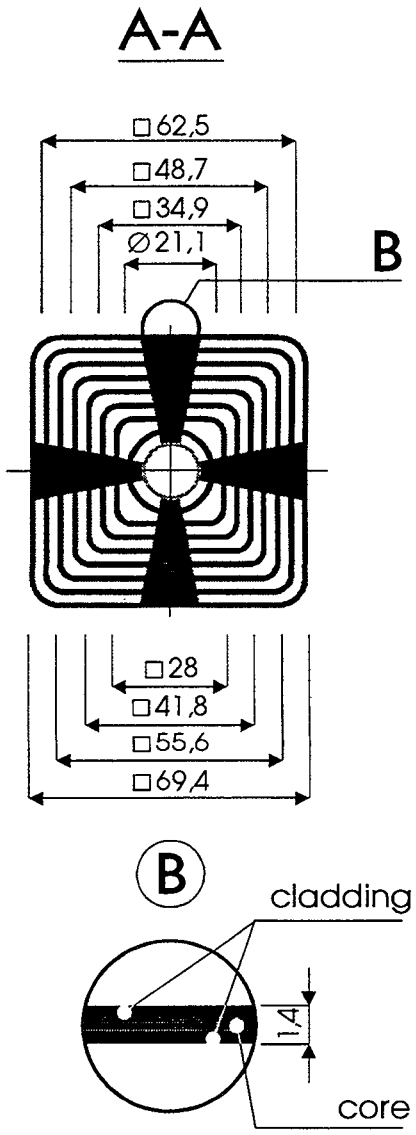

TYPE OF FA	SERIAL FA
Content of U-235 per unit of core volume, g/dm^3	119 (for 36%) 102 (for 90%)
Surface of heat removal per unit of core volume, sm^2/sm^3	5,25

Fig. 1

FE MANUFACTURED BY MEANS OF EXTRUSION TECHNOLOGY

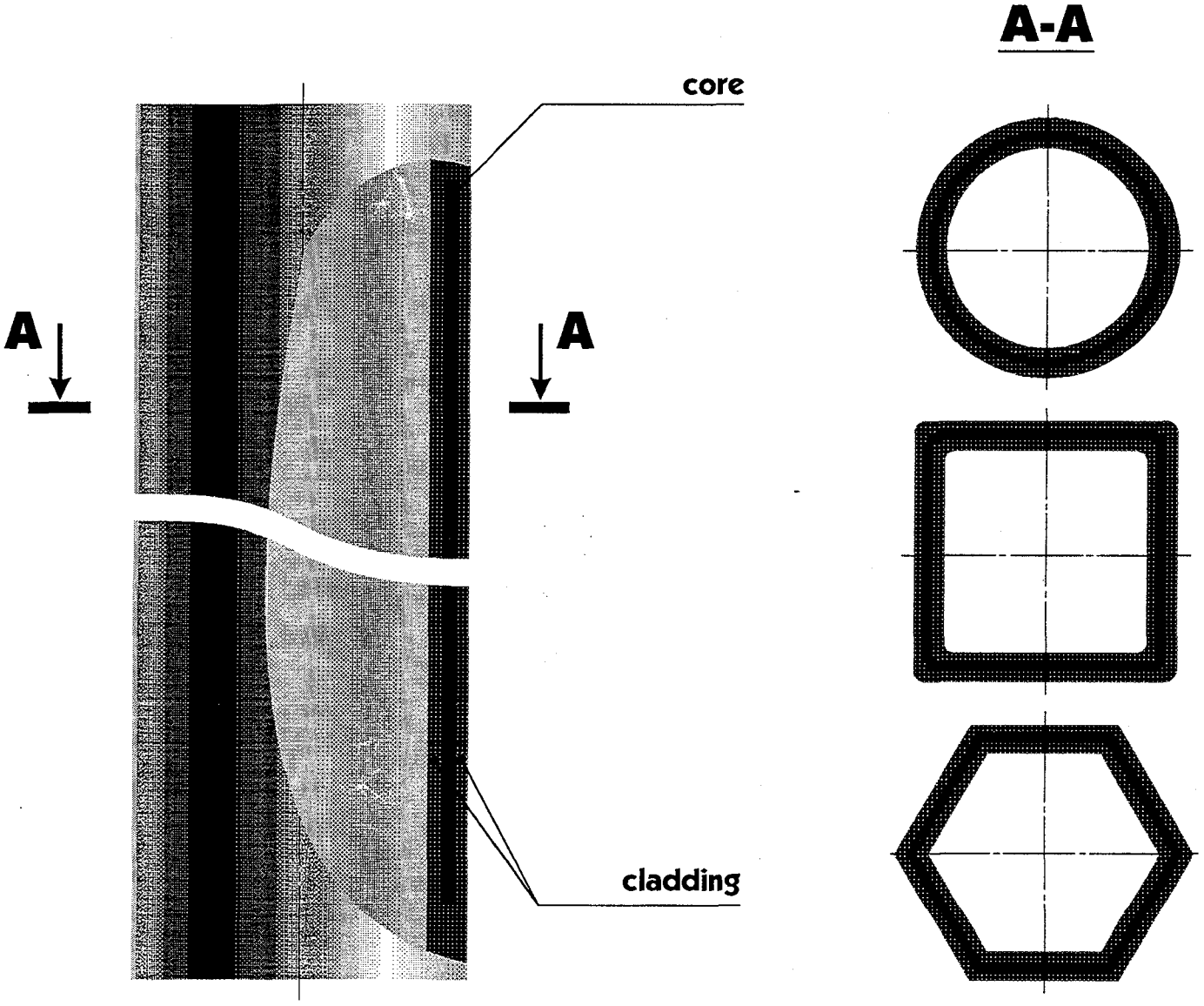

Fig. 2

1 FUEL ELEMENT FA OF TWR-S TYPE FOR NUCLEAR RESEARCH REACTOR

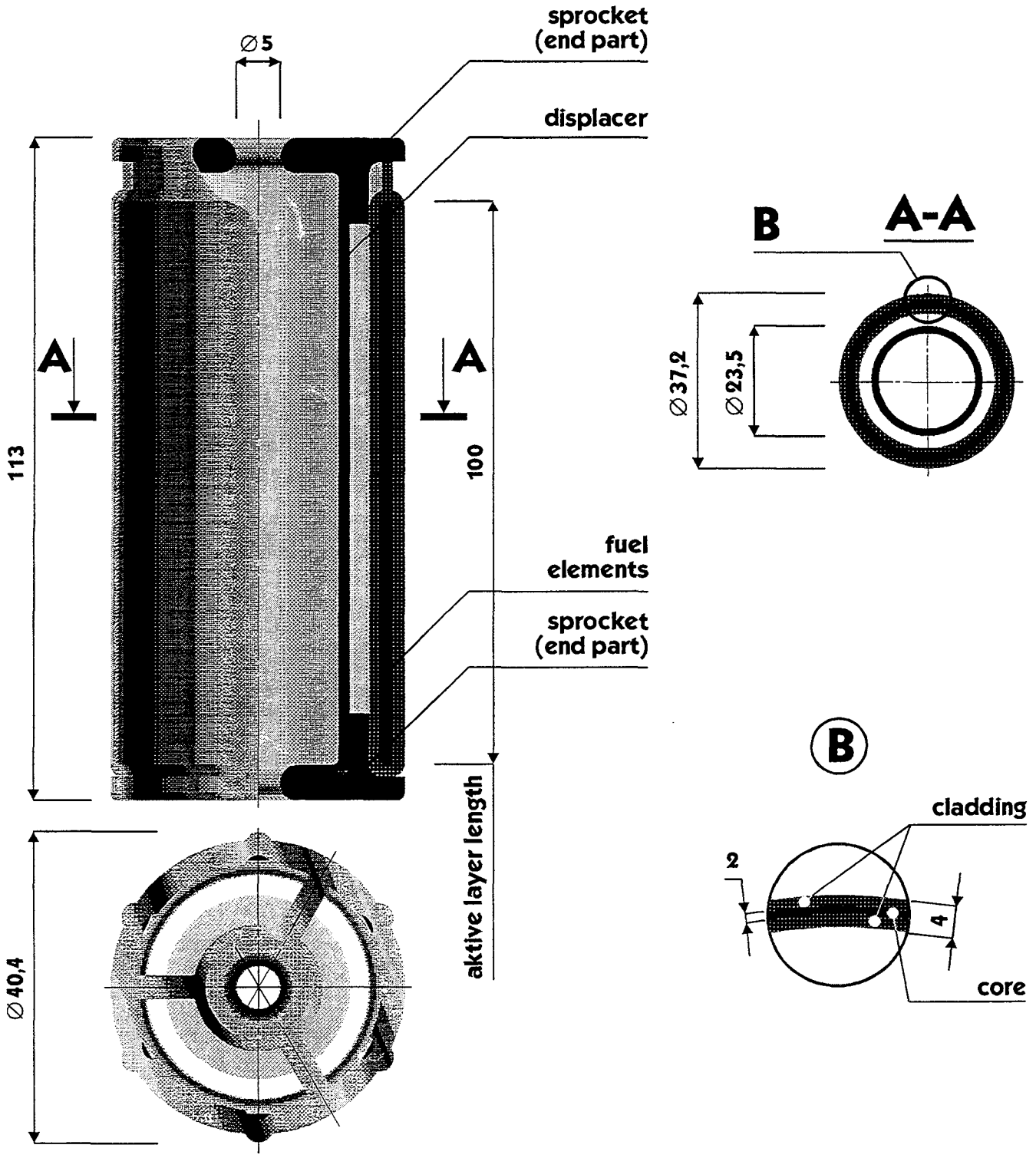

Fig. 3

BUSHING-TYPE FE FABRICATION PROCESS WITH UP TO 0,8 G/CM³ U CONCENTRATION IN FUEL CORE

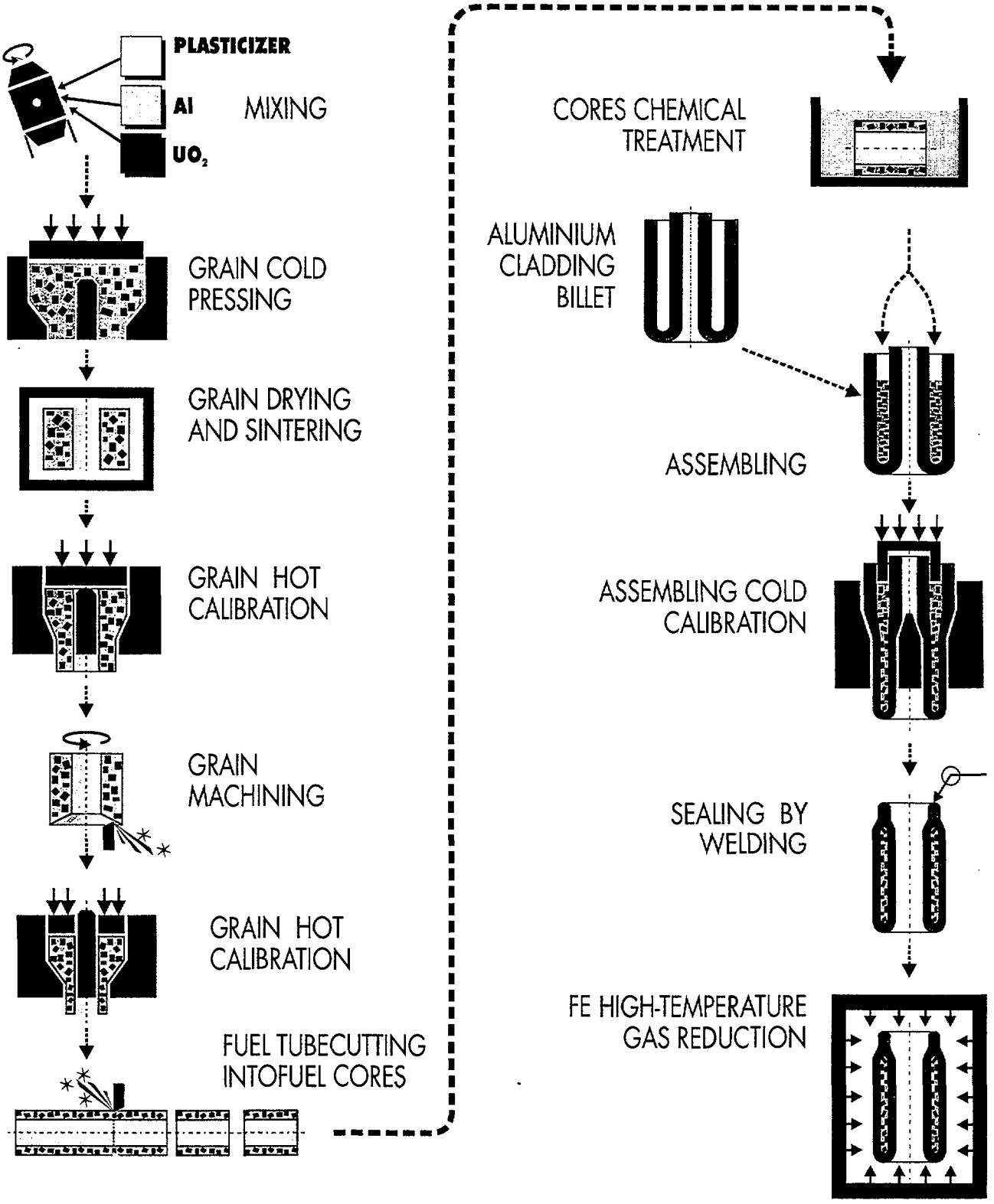

Fig.4

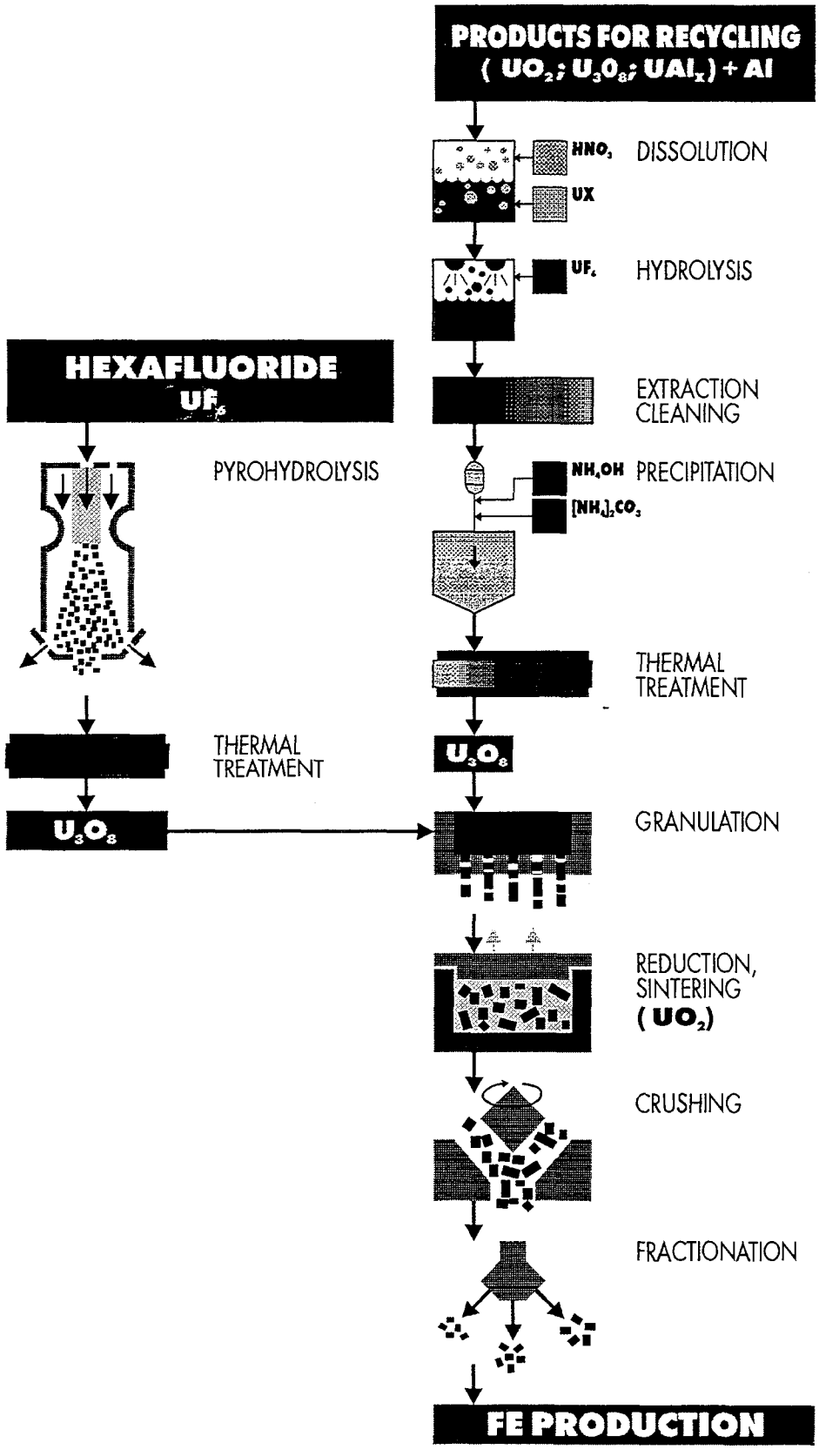
PRODUCTS FOR RECYCLING
(UO_2; U_3O_8; UAl_x) + Al
HNO_3
UX
DISSOLUTION
UF_4
HYDROLYSIS
EXTRACTION
CLEANING
NH_4OH
$[NH_4]_2CO_3$
PRECIPITATION
THERMAL
TREATMENT
U_3O_8
GRANULATION
REDUCTION,
SINTERING
(UO_2)
CRUSHING
FRACTIONATION
FE PRODUCTION
HEXAFLUORIDE
UF_6
PYROHYDROLYSIS
THERMAL
TREATMENT
U_3O_8

Fig. 5

BUSHING-TYPE FE FABRICATION PROCESS WITH 0,8-3,8 G/CM³ U CONCENTRATION IN FUEL CORE

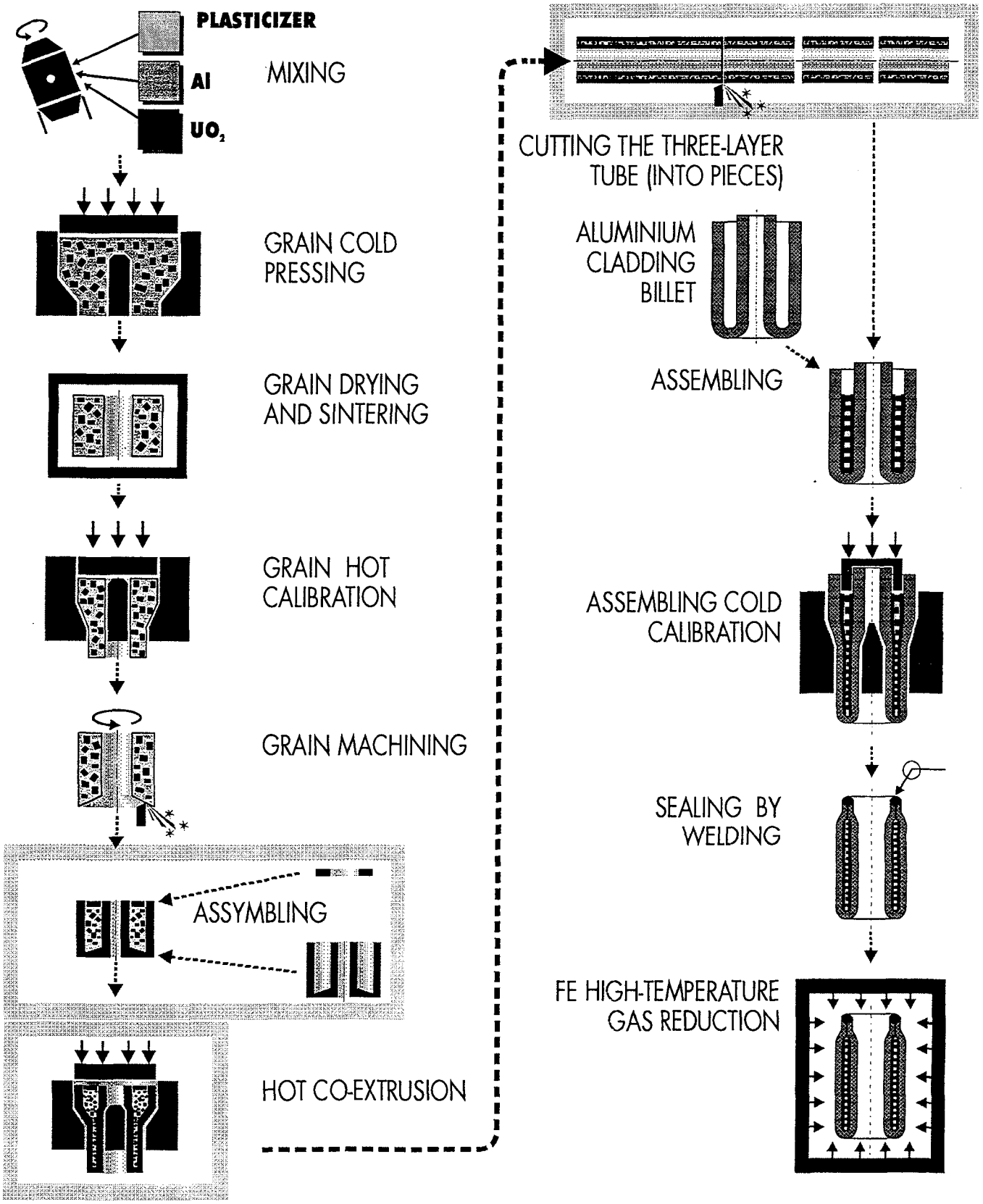

Fig.6

CH0100330

QUALIFICATION OF UKAEA PRODUCED SILICIDE FUEL

J. GIBSON and P. CARTWRIGHT
Nuclear Services Group
UKAEA, Dounreay, Thurso – UK

and

J. MARKGRAF
Institute for Advanced Materials
Joint Research Centre, Petten - The Netherlands

ABSTRACT

As a result of the US RERTR programme, many research reactors have converted their reactor fuel usage from HEU to LEU. The production of LEU fuel provides the fabricator with many new fabrication and inspection challenges. The MTR Fuel Fabrication Plant at Dounreay has extensive experience in alloy fuel fabrication but, to maintain future commercial viability, it has expanded its product base.

To become a recognised fabricator of LEU fuel elements requires the production, irradiation and post-irradiation examination of qualification elements. This paper describes the process undertaken in the identification of an irradiation partner, the specification of an element design, the production of two qualification elements and their test irradiation to more than 50% burn-up. The two fuel elements completed this irradiation cycle in October 1997 with no unexpected deviations in performance. Post-irradiation examination is currently in progress and the results will be presented at the RRFM conference in March 1998.

1. Introduction

The UKAEA at Dounreay, United Kingdom, have fabricated two LEU slicide fuel elements with a uranium density of 4.8g/cm^3. The elements have successfully completed a qualification process involving pre-irradiation tests, test irradiation and, after being stored for 100 days for the decay of fission products, post-irradiation examination.

The fuel elements were irradiated in the High Flux Reactor (HFR) at Petten, The Netherlands and post-irradiation examination (PIE) was performed at the Petten Hot Cell Laboratory of the Netherlands Energy Research Foundation (ECN).

Alloy fuel elements for research reactors have been produced at Dounreay in the MTR Fuel Fabrication plant since 1957. The plant was built to service the requirements of the UK Material Testing and Research Reactor programmes. The plant primarily serviced the UK Dido and Pluto reactors at Dounreay and Harwell but also produced elements for many different countries. To date the plant has produced approximately 10,000 fuel elements mainly of the alloy type.

Between 1989 and 1993 the UKAEA designed, installed and commissioned equipment to permit the production of dispersed fuels containing both LEU fuel as U_3Si_2 and HEU fuel as UAl_x.

Qualification of the new products from the Dounreay fabrication plant required the identification of irradiation partners. For the LEU silicide elements the selected partner was the Institute for Advanced Materials (IAM) with its High Flux Reactor (HFR) in The Netherlands.

2. Objectives

The objective of the fabrication, test irradiation and PIE was to qualify the UKAEA as a manufacturer of LEU fuel elements for low and high power research reactors.

To meet standard qualification requirements the elements had to be irradiated to a burn-up of at least 50% equating to at least 300 full power days in the foreseen core positions. Before, during and after irradiation, measurements, visual inspection and analyses were performed in order to characterise the irradiation behaviour of the elements.

The qualification involved demonstrating that the elements:

- had sufficient rigidity to withstand the mechanical forces associated with handling and irradiation
- were sufficiently resistant to local or general deterioration (corrosion, pitting, scaling or cracking) of the fuel plate cladding
- did not release either fuel or fission products to the reactor coolant
- did not deform due to swelling, blistering or other irradiation or temperature induced mechanisms to such an extent that the minimum cooling channel dimensions required for safe heat removal were not maintained
- did not deform (twisting, bowing, etc) due to swelling, hydraulic forces, or other mechanisms to such an extent that the elements did not maintain a proper fit in the reactor core grid structure
- did not reach fuel clad temperature levels such that mechanical properties required for sufficient fuel plate strengths and rigidity were not maintained
- could be handled, stored and after a decay period of at least 100 days, transported without deformation, fission product release or other defects

The test programme addressed all qualification requirements listed above and included all necessary measurements and analyses to determine the nuclear conditions at which the test irradiations were carried out.

3. High Flux Reactor

Within the framework of the US sponsored RERTR programme, a total of 6 LEU elements have already been test irradiated in the High Flux Reactor (HFR) during the period 1981 to 1991. These elements containing U_3O_8-Al, U_3Si_2-Al and $U_3Si_{1.6}$-Al were fabricated by CERCA (France), NUKEM (Germany) and B&W (USA) respectively. The results of the in-core behaviour and the findings during PIE were reported at different RERTR meetings. [1]

The HFR located at Petten belongs to the Institute for Advanced Materials of the Joint Research Centre (JRC) of the European Commission. The day-to-day operation and maintenance of the plant are carried out under contract by the Netherlands Energy Research Foundation (ECN). The HFR is a 45MW water cooled and moderated multi-purpose research reactor offering an extended number of irradiation positions and facilities for various fuel and material irradiation programmes, fundamental research and isotope production. [2]

As shown in Fig. 1 the reactor core consists of 33 fuel elements, 6 control rods, a beryllium reflector and 19 experimental positions. Apart from the 19 in-core irradiation positions, there are 12 irradiation positions at the poolside facility offering stationery as well as transient irradiation conditions. Surrounding the core box, 12 beam tubes are situated for basic and applied fundamental research and activation analyses. These include dedicated beam tubes for Boron Neutron Capture Therapy and neutron radiography of non-radioactive components.

The present HFR operating schedule consists of 11 cycles of 28 days (24.7 days of full power operation and 3.3 days for core reloading procedures) and 2 maintenance stops of about 4 weeks resulting in at least 275 days of full power operation per year. The yearly operational plan for the HFR is issued in October and is followed as closely as possible to offer the users a predictable timetable for experimental and isotope production planning.

The LEU elements were irradiated in the periphery of the HFR core, in core positions A2/A8 and G2/G8. In order to compensate for radial flux and power gradients in the selected positions, the elements were moved regularly between the different locations.

HFR Loading for cycle: Nov-96

	A	B	C	D	E	F	G	H		I
1	+	+	+	+	+	+	+	+	1	+
2	LA02	F	F		F		F		2	+
3	F	F		F		F		F	3	+
4	F	CR	F	CR	F	CR	F		4	
5	F	F		F		F		F	5	+
6	F	CR	F	CR	F	CR	F	AL	6	+
7	F	F		F		F		F	7	+
8	LA01	F	F		F		F	AL	8	+
9	+	+	+	+	+	+	+	+	9	+

F Fuel Element CR Control Rod + Beryllium Element Experiment

Fig 1. HFR Core Layout

4. Technical Description of LEU Elements

The specification of the two UKAEA LEU elements is partly based on the specification of the standard HFR HEU elements [3] and partly on IAEA-Tecdoc467 „Standardisation of specifications and inspection procedures for LEU plate type research reactor fuels". [4]

The major features of the test elements were:

- all external dimensions complied with the standard HEU fuel element dimensions
- to obtain the required ^{235}U loading, the fuel meat thickness was increased to 0.76mm for both inner and outer fuel plates
- the cladding thickness was the same as for HEU elements, i.e. 0.38mm for the inner fuel plates and 0.57mm for the two outer fuel plates
- each cooling channel width was 2.46mm +/- 0.25mm which is slightly larger than the HEU fuel element channel width of 2.18 +/- 0.25mm

- to achieve the required min. cooling channel dimensions and an optimum uranium/metal ratio with the thicker plates, the number of plates/element was reduced from 23 to 20
- curved fuel plates with a radius of 140mm were used, similar to the standard plate. To facilitate the use of the go/no-go coolant channel test facility, the cylindrical end piece and the comb were omitted at the upper side of the elements
- as burnable poison, 0.5mm diameter cadmium wires were mounted in longitudinal slots in the side plates adjacent to each fuel plate

5. Pre-irradiation Characterisation

Before the irradiation programme commenced, the test elements were subjected to a pre-irradiation test programme consisting of the following:

- cooling channel measurements – each gap was measured to allow a comparison to be made after irradiation
- reactivity measurements – the 2 LEU elements were compared with an HEU element and it was found that the data was in line with the earlier LEU irradiations in the Petten HFR
- coolant flow against pressure drop measurements – the 2 elements were tested with an HEU element for reference and were found to have a lower flow resistance than the previous LEU elements tested
- neutron metrology – the measured data was fully comparable with similar data on the previous LEU elements and with the data predicted by the nuclear core calculations
- neutron physics and core calculations – the measured and calculated thermal neutron fluence rate distribution were in good agreement

6. Test Irradiation

The two LEU elements completed 12 HFR cycles (307 full power days) to a burn-up of 55%. The table overleaf indicates the core positions occupied by the two elements during each cycle together with the relevant burn-up, heat flux and power values.

Coolant gap checks and visual inspections were performed after each cycle throughout the irradiation period that verified good in-pile behaviour of the fuel elements.

7. Post-irradiation Examination

PIE was performed and continues on fuel element LA01 at the Petten Hot Cell Laboratory of ECN and includes the following:

- Visual inspection for blistering, discoloration and pitting
- Removal of the outer fuel plate from the side plates
- Visual inspection of the recovered plate for blistering, discoloration and pitting
- Plate thickness measurements along the recovered fuel plate length
- Multi-isotope gamma scanning along the element and along the recovered fuel plate

8. Conclusion

All of the objectives of the LEU fuel element qualification programme listed in section 2 of this report have been successfully achieved and demonstrate the good performance of UKAEA produced silicide fuel.

The MTR fuel element fabrication plant at Dounreay, operated by the United Kingdom Atomic Energy Authority, has now demonstrated that the silicide fuel produced using the equipment installed in the early 1990s has fully met the qualification requirements and the UKAEA at Dounreay is now able to offer the fabrication of low enriched Research Reactor fuel to the Research and Test Reactor community.

9. References

1. Proceedings of the RERTR conference held at Newport, Rhode Island, USA. (Sept 23 – 27 1990). ANL/RERTR/TM-18 Conf/9009108
2. Ahlf, J. High Flux Reactor (HFR) Petten. Characteristics of the installation and the irradiation facilities. EUR 15151 EN (1993)
3. Wijtsma, FJ. Technical specification of HEU fuel elements and control rods. ECN/BUNE-HFR-TR-93-43/0
4. International Atomic Energy Agency, Standardisation of specifications and inspection procedures for LEU plate-type research reactor fuels. IAEA-TECDOC 467 (1988)

HFR Cycle	Core Position	Full Power Days Days/ Cycle	Full Power Days Cum've	U-235 Content g	Burn-up %	Cd Burn-up -%	Heat Fluxes av KW/m²	Heat Fluxes max KW/m²	Total Power KW
Fuel Element LA01									
Aug-96	A2	0.00	0.00	549.43	0.00	0.00	645	1200	725.6
Aug-96	A2	25.38	25.38	516.78	5.94	16.70	599	1160	625.4
Sep-96	A8	25.44	50.82	485.26	11.68	33.10	576	1111	578.0
Oct-96	A2	25.28	76.10	452.90	17.57	51.00	625	1189	680.6
Nov-96	A8	25.45	101.55	421.16	23.35	69.50	591	1173	609.0
Jan-97	G2	25.26	126.81	398.82	27.41	82.90	434	807	328.1
Feb-97	G8	25.35	152.16	382.19	30.44	93.20	336	594	196.6
Mar-97	G2	24.78	176.94	359.58	34.55	100.00	460	947	368.5
Apr-97	G8	29.17	206.11	340.64	38.00	100.00	333	628	193.3
May-97	G2	25.20	231.31	317.89	42.14	100.00	462	1028	372.1
Jun-97	A2	25.18	256.49	291.62	46.92	100.00	511	1013	455.3
Jul-97	A8	25.58	282.07	269.47	50.95	100.00	449	820	351.6
Aug-97	A2	25.30	307.37	246.24	55.18	100.00	478	879	397.9
Averaged Data		25.61					500	965	452.5
Fuel Element LA02									
Aug-96	A8	0.00	0.00	549.60	0.00	0.00	630	1180	691.7
Aug-96	A8	25.38	25.38	517.53	5.84	16.30	568	1111	562.3
Sep-96	A2	25.44	50.82	484.82	11.79	33.30	614	1172	657.6
Oct-96	A8	25.28	76.10	453.44	17.50	50.50	586	1124	598.6
Nov-96	A2	25.45	101.55	420.70	23.45	69.70	627	1244	685.6
Jan-97	G8	25.26	126.81	401.73	26.91	80.80	359	632	224.6
Feb-97	G2	25.35	152.16	380.38	30.79	94.30	444	823	343.7
Mar-97	G8	24.78	176.94	362.53	34.04	100.00	354	664	218.2
Apr-97	G2	29.17	206.11	336.86	38.71	100.00	447	918	348.0
May-97	G8	25.20	231.31	321.79	41.45	100.00	307	580	164.4
Jun-97	A8	25.18	256.49	295.27	46.28	100.00	511	1017	455.3
Jul-97	A2	25.58	282.07	269.93	50.89	100.00	498	909	432.5
Aug-97	A8	25.30	307.37	248.37	54.81	100.00	447	820	348.0
Averaged Data		25.61					492	938	440.8

Table 1. Fuel Elements LA01 and LA02 Irradiation Data

CH0100331

TECHNICAL ABILITY OF NEW MTR HIGH DENSITY FUEL ALLOYS REGARDING THE WHOLE FUEL CYCLE

The fuel manufacture by JP DURAND (CERCA)
The fuel neutronic performances by B. MAUGARD (CEA)
The fuel reprocessing by A. GAY (COGEMA)

RRFM meeting in BRUGES
March 29-31 , 1998

ABSTRACT

The development of new fuel alloys could provide a good opportunity to improve drastically the fuel cycle on the neutronic performances and the reprocessing point of view . Nevertheless ,those parameters can only be considered if the fuel manufacture feasibility has been previously demonstrated .

As a matter of fact , a MTR work group involving French partners (CEA , CERCA , COGEMA) has been set up in order to evaluate the **technical ability** of new fuels considering the whole fuel cycle . In this paper , CERCA is presenting the preliminary results of UMo and UNbZr fuel plate manufacture, CEA is comparing to U_3Si_2 the Neutronic performances of fuels such as UMo , UN , UNbZr; while COGEMA is dealing with the reprocessing feasibility .

INTRODUCTION :

Within the framework of the Reduce Enrichment of Research and Test Reactors programme (RERTR) involving international operators, manufacturers and laboratories, the LEU silicide fuel U_3Si_2 has been qualified in 1988 by the American NRC up to a density of 4.8 g Ut / cm3. After 10 years background it appears now obvious that this fuel cannot fully comply with the needs of existing and future reactors. The density reached is not high enough to convert some HEU reactors satisfactorily and the back end solutions are not fully assured.

Based on these facts, the Argonne National Laboratory on behalf of the RERTR Programme presented, by the end of 1996, an irradiation plan for new fuels allowing theoretically to reach densities up to 8 or 9 g Ut / cm3 [1]. The Uranium alloys used for these fuels were supposed to be a γ stabilised phase. For really higher densities compared to U_3Si_2, Uranium Molybdenum and Uranium Niobium Zirconium alloys were mainly considered.

Considering the whole MTR fuel cycle (Manufacturing, reactor operation and reprocessing) the major French actors have pointed out the need to analyse these new fuels and others that have been proposed before.

For this purpose a working group has been set up : CERCA has tested the manufacture feasibility, CEA has developed neutronic calculations and core performances more particularly considering the new LEU JHR reactor, whereas COGEMA has studied the reprocessing feasibility .

The main preliminary results are presented hereafter .

1 : THE FUEL MANUFACTURE

1-1 : γ alloy optimisation

1-1-1 : Aims of the optimisation and problems to be overcome

Unlike U_3Si_2 and UN , UMo and UNbZr alloys are not definite compounds with their own crystal structure but a solid solution where Molybdenum or Niobium and Zirconium are included within the Uranium metal crystal structure . The γ phase of the Uranium is required in this particular case because of the body centred crystal structure which is expected to have a good behaviour under irradiation .

At room temperature and in equilibrium conditions , the α stable crystal structure is generated. Therefore, γ phase can only be obtained in a metastable state at room temperature when quenching the alloy.

The optimisation work to be done related to the manufacture of the γ Uranium alloys can be summarised as followed :

- Obtain pure metastable γ phase at room temperature
- Keep γ phase during hot rolling (stability increase with the alloy content)
- Get an homogeneous alloy content with no segregations
- Be sure the refractory alloy is fully dissolved
- Obtain a dense compound (with a minimum alloy content)

CERCA has focused its development effort on two types of γ phase alloys which have their metallurgical specificity's :

- Low alloy content (U-5%Mo and U-4%Zr-2%Nb)
High densities but may be poor thermal stability

- High alloy content (U-9%Mo and U-3%Zr-9%Nb)
Lower densities but higher thermal stability

1-1-2 : results of the casting developments :

Taking into account all the difficulties previously explained , a special procedure of casting and heat treatment has been developed in order to reach our goal : an homogeneous γ phase of Uranium alloys .

Figure 1 shows micrographs of "**as cast**" alloys ingots . Whatever alloy is considered, lighter areas can be seen in the centre of metallurgical grains which means a low content of Uranium whereas, the darker areas represent the grain boundaries with a high level of Uranium.

Figure 1 : As cast alloys ingots

U-Mo5%

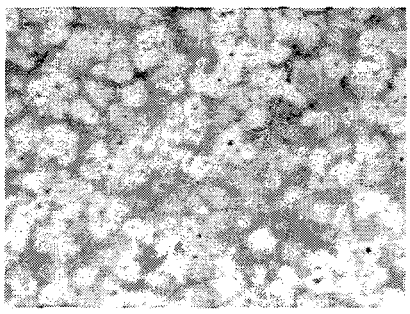

U-Mo9%

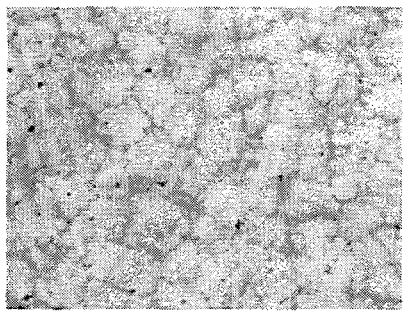

U-Zr4%-Nb2%

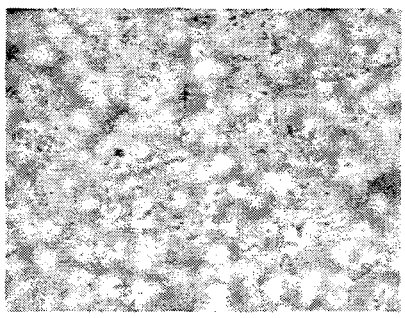

U-Zr3%-Nb9%

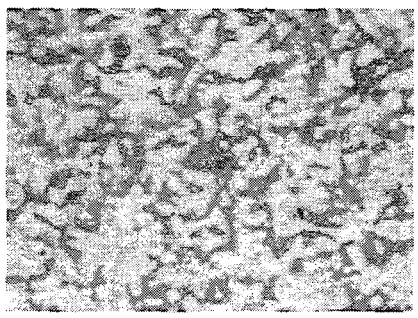

On the UMo **heat treated ingots** (figure 2) no more segregation can be detected. Concerning the U-Zr3%-Nb9% alloy it still remains traces of precipitates which are made of roughly pure Zirconium whereas on the U-Zr4%-Nb2% sample it can be noticed that the grain boundaries segregation's have disappeared and an other type of inhomogeneity can now be seen : the mixing of α and γ phases .

Figure 2 Heat treated ingots

U-Mo5%

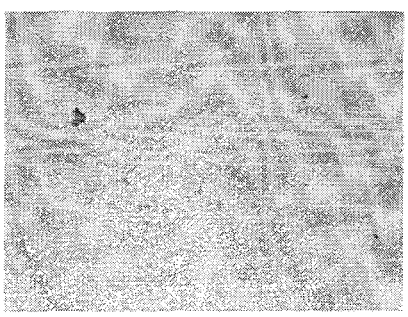

U-Mo9%

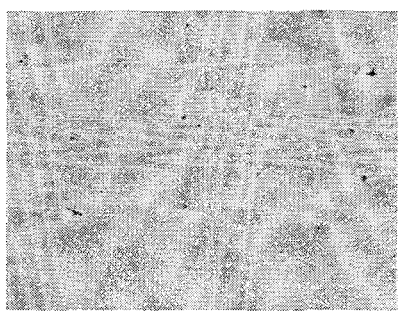

U-Zr4%-Nb2%

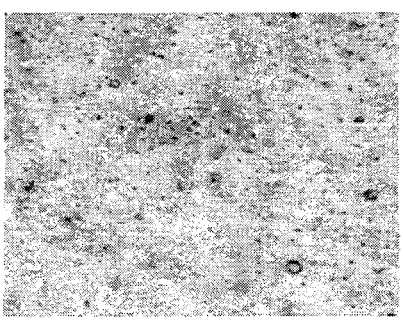

U-Zr3%-Nb9%

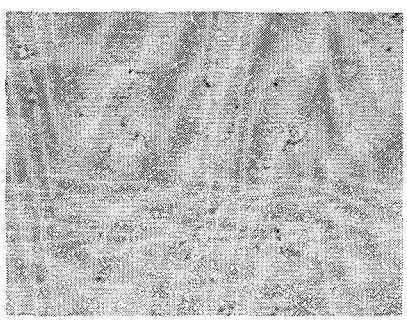

X ray diffraction patterns carried out on "**as cast**" alloys show pure γ phases for all the samples except in the case of U-4%Zr-2%Nb alloy which is composed of α and γ phases. The same characteristics can be analysed on the **heat treated ingots** .

After the development of the casting and heat treatments, the ingots were crushed and ground in order to get powder . The mechanical behaviour of γ alloys is completely different from U_3Si_2, the comminuting parameters have been consequently adapted to those new fuels .

1-2 : The fuel plate manufacture with UMo fuels

As CERCA masters the manufacture of high loaded plates thanks to a proprietary advanced process allowing to reach 6g Ut / cm^3 with U_3Si_2 [2], the same process has been tested with new fuels.

For a given volume fraction of fuel particles of 53 %, when replacing U_3Si_2 particles by γ phase alloys the following densities (g Ut / cm^3) can be reached :

Vol fraction of fuel	U-5%Mo	U-4%Zr-2%Nb	U-9%Mo	U-3%Zr-9%Nb
53 %	9	8.6	8.3	7.6

As it seems to be impossible to get U-4%Zr-2%Nb alloy with a pure γ phase, this fuel has not been selected for the manufacture test. In a first step, only UMo plates have been manufactured .

The first manufacture trials showed the advanced process could not be applied as existing due probably to the difference in mechanical behaviour between U_3Si_2 and γ phase alloys .The process has been consequently adapted and the main results are presented hereafter

1-2-1 : Plates micrographs .

Figure 3 shows micrographs in current part and the dog bone areas of 8.3 and 9 g Ut / cm^3 plates manufactured with respectively U-9%Mo and U-5%Mo alloys. First of all, it must be noticed that the meat geometry of both plates are quite similar. This is as expected because of the same volume fraction of fuel particles within the meat (53 %). On both plate, no dog bone effect can be detected leading up to an acceptable minimum cladding thickness. Furthermore, the meat thickness is rather regular on the current area .

Figure 3 :

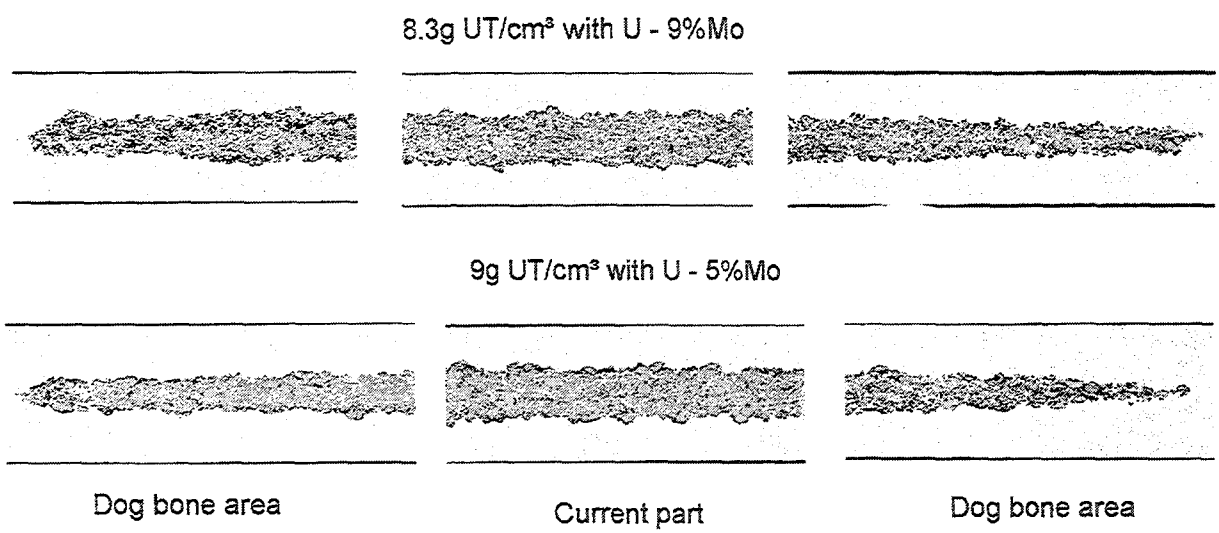

1-2-2 : Homogeneity of Uranium distribution :

Due to the difference in density between aluminium and UMo powders, the first plates manufactured had a very poor homogeneity quality. After a careful development work, a special procedure has been set up for the manufacture of the fuel meat in order to perform good plates.

For the 8.3 and 9 g Ut / cm^3 UMo plates, the X ray inspection homogeneity diagrams stood easily between the allowed limits of the commonly used Silicide fuels specification when scanning the whole meat area

Although U-3%Zr-9%Nb has not been tested yet , the manufacture results are supposed to be equivalent since this alloy has roughly the same mechanical behaviour as UMo alloys because of the same crystal structure .

1-3 :Thermal stability:

During the manufacture, the fuel plate is maintained for a few hours at several hundred Celsius degrees, while, under irradiation, it has to endure one or two hundred Celsius degrees for many days.

The thermal stability of γ phase alloys is therefore very important to test. For that purpose, samples made of aluminium and γ phase alloys were tested at 400 ° C for several days. This test is very severe regarding the irradiation conditions . It must be pointed out that the U-4%Zr-2%Nb alloy has not been tested as it has not been possible to get pure γ phase.

After **three days at 400 °C** the U-9%Mo sample kept its perfect geometry and the γ structure remained unchanged . With the U-5%Mo ; U-4%Zr-2%Nb and U-3%Zr-9%Nb samples, X ray diffraction pattern showed α and γ phases with traces of UAlx. It can be suggested that γ phase of those alloys has returned to the equilibrium state, the α phase . Afterward the α phase has diffused with aluminium leading to UAlx .

1-4 : Conclusion about the fuel manufacture :

It has been demonstrated that the fuel manufacture of high loaded plates with γ alloys is feasible . Densities up to 9 g Ut/ cm3 can be obtained with U-5%Mo and 8.3 gUt/cm3 with U-9%Mo.

Nevertheless, not only for the fuel manufacturer but also for the reactors, the thermal stability is a very important selection criteria for the γ phase alloys. From that point of view U-4%Zr-2%Nb alloy is the worst candidate because it seems to be impossible to get a pure γ phase after casting. The U-5%Mo and U-3%Zr-9%Nb alloys are composed of pure γ phase after casting but are not very stable at 400 °C. The best candidate seems to be U-9%Mo as it fulfil the criteria of thermal stability.

In order to combine high density and thermal stability it could be considered an intermediate percentage of Molybdenum. An other solution lies in adding metal traces such as Ruthenium, Platinum or other to thermally stabilise U-5%Mo. In this particular case ANL has scheduled an irradiation test programme.

Neutronic performances evaluations of γ phase fuels could make a selection among the feasible and stable fuels .

2 : THE FUEL NEUTRONIC PERFORMANCES

This study aims at analyzing the influence of LEU fuel densification on the main neutronic physical characteristics of the Jules Horowitz Reactor core, by considering different types of dispersing agents presently under study.

2-1: The Jules Horowitz Reactor

The Jules Horowitz Reactor (JHR) is a new research reactor project totally dedicated to nuclear material and fuel tests. It will eventually be one of the main European technological irradiation tools, and will provide its support to French nuclear power plants for the qualification under irradiation of new nuclear concepts and fuels, of materials and components. Its installation is foreseen on the CEA-CADARACHE site and its startup programmed for 2005.

In view of the present scope of irradiation requirements it will have to meet, and of the uncertainty as to their evolution at the beginning of the 21st century, the objectives attributed to the JHR core are ambitious. Besides high performances and great operating flexibility, it is expected to be of large experimental volume and great adaptability in order to meet future demands. Finally, it will have to be both highly available and generate the lowest possible cycle costs.

The choice of a non-proliferating LEU fuel (enrichment limited to 19.75 % in mass) was immediately made based on the co-laminated plates containing a dispersed silicide of density 4.8 g U.cm^{-3} in fuel meat. This choice is constraining for cycle costs, with a high yearly consumption of fuel elements.

Fig. 1 - Diagram of JHR reference core

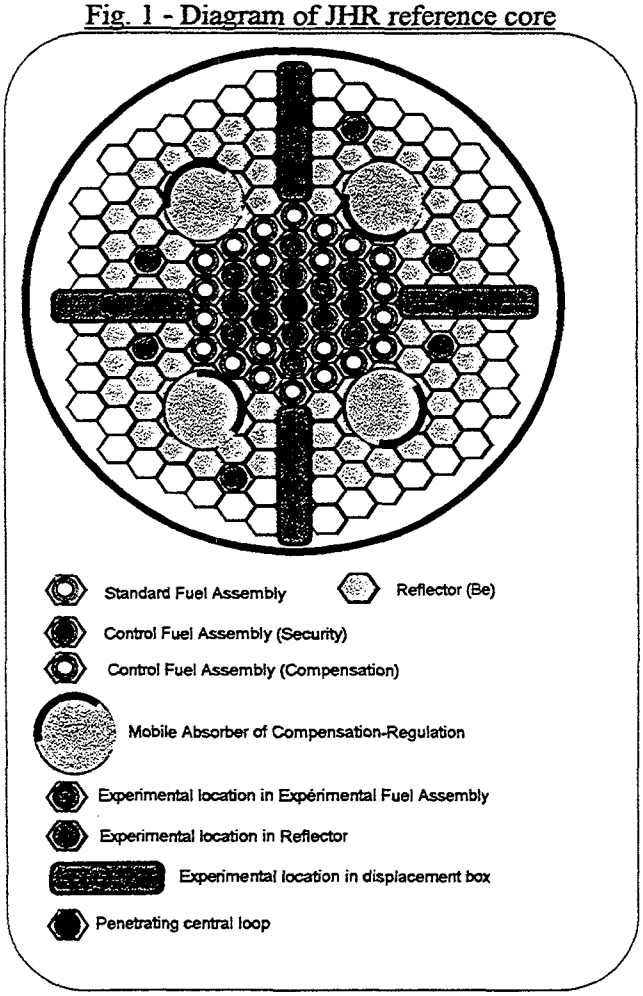

The JHR has an open-pool type reference core, cooled by light water. With a maximum thermal power of 100 MW, it has a fuel height of 80 cm and an equivalent diameter of 51 cm. In order to reduce cycle costs and improve irradiation performances, it is surrounded by a thick Beryllium reflector in which experimental devices can be installed.

The core is formed by 37 fuel elements and is designed to receive a penetrating central loop dedicated to high flux irradiations, for purposes of FR representativity or achievement of power transients.

2-1-1 :The reference fuel element :

Because of the high specific power of the core (600kW/l), the primary water flow rate reaches 16 m/s crossing the core, thus implying large vibration risks. Also, the present reference fuel element is constituted by cylindrical plate sections, integrated in a hexagonal wrapper tube.

In order to obtain high in core fast flux performances, the plate lattice is greatly under-moderated with a reference thickness of the coolant channel of 1.84 mm (element called H10B') sometimes of 1.53 mm (element called H10B). The thermal component of the core is then mitigated. The reference fuel is made of co-laminated fuel plates containing a dispersed silicide of density 4.8 g $U.cm^{-3}$ of fuel meat.

Fig. 2 - Diagram of H10B' reference fuel element

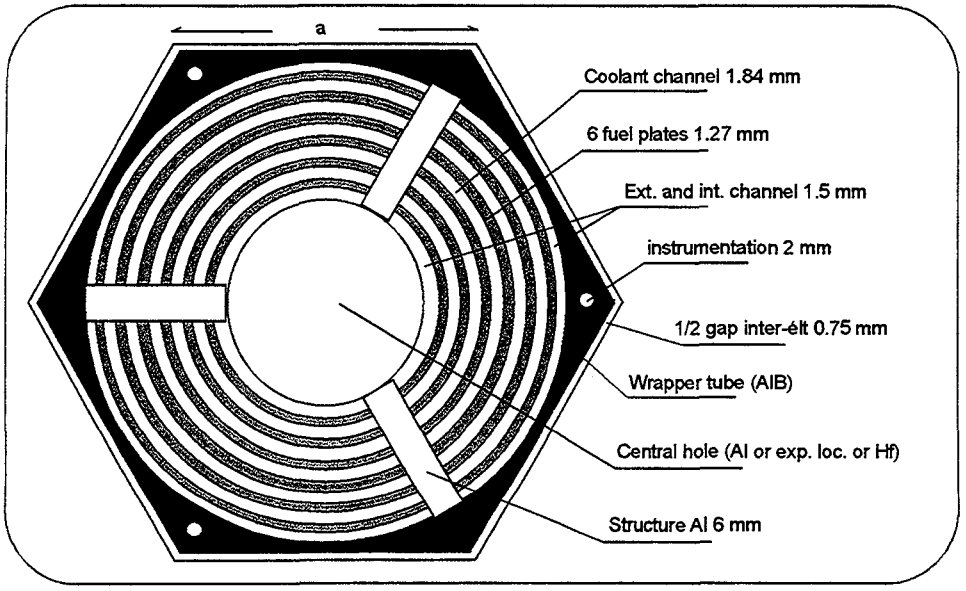

The characteristics of the reference elements considered are listed below :

	H10B'	H10B
Number of plates	6	7
Edge of wrapper tube (cm)	4.65	4.67
Coolant channel (mm)	1,84	1,53
Fuel volume (cm^3)	384	438
U Mass (g)	1842	2101
^{235}U Mass (g)	364	415
Specific power (W/gU)	1468	1287

2-1-2 : Operating characteristics and irradiation performances :

The yearly operation of the JHR is based on 9x(28 EFPD) cycles, in other terms a reactor availability factor of 0.69. Two operation modes are defined, one called the « S » reference mode with 37 fuel elements and the other called the « B » mode with a central penetrating loop in the core, with a diameter of between 80 and 150 mm.

The lifetime of the core operated in « S - one-batch » mode with 37 new H10B' elements is of 56 EFPD, authorizing a three-batch fractionated renewal on the basis of 28 EFPD cycles. The number of fuel elements annually consumed is close to 110, with a rate of fissioned ^{235}U at discharge close to 70 %.

The maximum perturbed thermal (< 0.625 eV) and fast (> 1 MeV) fluxes respectively reach 9.E14 $cm^{-2}.s^{-1}$ and 8.E14 $cm^{-2}.s^{-1}$, depending on the operation mode.

2-2 : Neutronic study of the JHR with high density LEU fuels

2-2-1 : Objectives

This study aims at analyzing the influence of densification in U of the meat of the plates on fuel management, on the flux levels and the obtained neutron spectra, and on the negative reactivity of the control rods. The influence of the dispersing agent used is analyzed in terms of loss of lifetime (DL). A simplified calculation model of the one-batch lifetime is established for fuels with densities included between 4.8 and 8.5 g $U.cm^{-3}$ in the meat.

2-2-2 : Modeling

A simplified 2D modeling of the core in the "S" mode was used for this study. It is based on the use of a calculation "project" scheme which links together the APOLLO1 and CRONOS2 CEA codes.

The aimed at eigenvalue at the end of cycle (VPFC) includes the calculation and technological uncertainties, a reactivity reserve at end of cycle of 1000 pcm and the negative reactivity of the non-modeled experimental load. It thus reaches VPFC = 1.11, and allows to deduce the t_b lifetimes of the one-batch operated cores and the optimum fractionated renewal modes on the basis of 28 EFPD/cycle.

The calculated reactivity worth are defined by : $\Delta\rho = \dfrac{K_1 - K_2}{K_1 K_2}$

2-2-3 : High density innovative LEU fuels

The innovative fuel characteristics considered in this study are summarized in the table below :

Fuel	Density ($gU.cm^{-3}$ meat)	Vol. Frac. of disp. agent (%)	M(^{235}U) H10B' (g)	Spec. P-H10B' (W/gU)	M(^{235}U) H10B (g)	Spec. P-H10B (W/gU)
U_3Si_2	4,8	42,4	364	1468	415	1287
U_3Si_2	5,66	50	428	1245	489	1091
UN	6,75	50	512	1044	584	915
UMo_9	7,74	50	587	910	669	798
UZr_4Nb_2	8,13	50	617	867	-	-
UMo_5	8,5	50	645	829	-	-

These fuels are defined compounds (U_3Si_2, UN) or alloys (UMo at 5% and 9% in Molybdenum mass - respectively noted UMo_5 and UMo_9 -, UZr_4Nb_2 at 4% in Zirconium mass and 2% of Niobium).

2-2-4 : Results

The average fluxes obtained in unbounded lattice for the different fuels analyzed are the following :

H10B' fuel	Density ($gU.cm^{-3}$ meat)	χ^1 %	χ^2 %	χ^3 %	χ^4 %	Φ average 10^{15} $cm^{-2}s^{-1}$
U_3Si_2	4,8	24	33,6	27.3	15,2	1,62
U_3Si_2	5,66	24,4	34,3	27,6	13,6	1,56
UN	6,75	25	35,3	27,8	11,9	1,52
UMo_9	7,74	25,5	36,1	27,8	10,7	1,46
UZr_4Nb_2	8,13	25,6	36,2	27,8	10,5	1,47
UMo_5	8,5	25,6	36,6	27,9	10	1,46

H10B fuel	Density ($gU.cm^{-3}$ meat)	χ^1 %	χ^2 %	χ^3 %	χ^4 %	Φ average 10^{15} $cm^{-2}s^{-1}$
U_3Si_2	4,8	24,3	34,6	27,8	13,2	1,65
U_3Si_2	5,66	24,9	35,5	27,9	11,7	1,59
UN	6,75	26	36,8	27,4	9,8	1,61
UMo_9	7,74	26,2	37,7	27,5	8,8	1,59

Densification implies a "hardening" of the neutron spectrum. During a doubling of U density in core, the average thermal flux level in the core decreases by 41 %, a variation linked to the drop in specific power. The fast flux level slightly decreases by 4 %. These variations have little effect on the irradiation performances of materials in core, and of the fuel, the latter being placed in a Beryllium reflector.

However, the doubling of the U density results in an efficiency loss of roughly 26 % of the mobile core control absorbers made of Hafnium. It is therefore necessary to either increase their number in the core or to find an inherently more efficient material. This efficiency is 8 % lower in an under-moderated lattice (H10B).

The effect of the dispersing agent varies in evolution on the homogeneous core : in view of the relatively "hard" spectrum due to the under-moderation of the lattice and to the initially high U mass in the core, the fuel densification effect is not significant on the initial reactivity worth.

The higher the density, the lower the reactivity slope in evolution (lower specific power) and thus authorizes gains in one-batch lifetime which allows greater renewal fraction modes.

The negative reactivity of the dispersing agent and losses in lifetime t_b associated to a one-batch core are presented below :

H10B' fuel	**Density** ($gU.cm^{-3}$ meat)	**DL 1-batch** t_b (efpd)	**EOL slope** pcm/efpd	**-Δρ BOL** pcm	**-Δρ EOL** pcm	**Δ (DL)** efpd
U_3Si_2	4,8	56	-399	22	44	-0,1
U_3Si_2	5,66	70	-348	19	47	-0,1
UN	6,75	80	-277	1017	1639	-5,9
UMo_9	7,74	91	-230	1673	2201	-9,6
UZr_4Nb_2	8,13	105	-232	135	186	-0,8
UMo_5	8,5	105	-215	952	1275	-5,9

H10B fuel	Density ($gU.cm^{-3}$ meat)	DL 1-batch t_b (efpd)	EOL slope pcm/efpd	-Δρ BOL pcm	-Δρ EOL pcm	Δ(DL) efpd
U_3Si_2	4,8	58	-328	12	32	-0,1
U_3Si_2	5,66	72	-265	8	27	-0,1
UN	6,75	81	-219	1058	1569	-7,2
UMo_9	7,74	92	-186	1362	1734	-9,3

Fig. 3 - One-batch lifetime H10B' core with and without dispersing agent

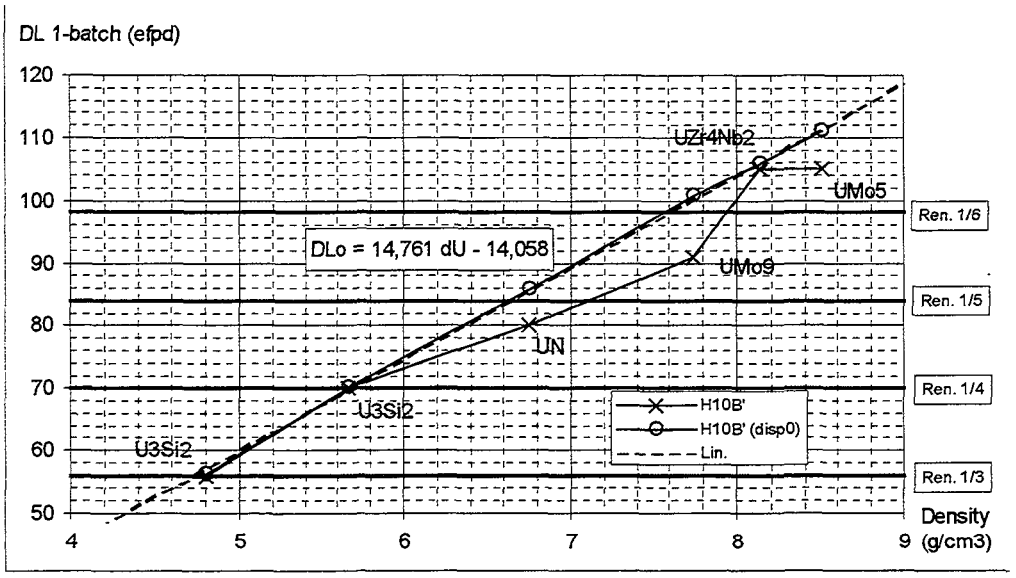

As a rule, the one-batch core lifetime established without dispersing agent and for the density range analyzed can be approximately expressed by :

$$DL_0 = 14{,}761\, dU - 14{,}058 \text{ (H10B')} \quad (1)$$

Due to the thermalization of the flux in evolution and to the difference in structure of the Nitrogen and Molybdenum cross sections, Nitrogen is 60% more penalizing at the end of cycle than at the beginning, whereas Molybdenum only increases by 30%.

In view of the low capture cross sections of Zirconium and Niobium, the UZr_4Nb_2 alloy appears to be very interesting from the neutronic point of view.

Finally, the gains in lifetime obtained lead to the forecasts on yearly consumption of fuel elements and to the discharge burnups (BU) presented below :

Fuel H10B'	Density ($gU.cm^{-3}$ meat)	Renewal fraction	M(^{235}U) cons./year (kg)	Nb. El./year	Disch. BU. (GWd/t_U)	Disch. BU. (%)	$g^{235}U$/ MWd
U_3Si_2	4,8	1/3	40	108	123,3	70	1,13
U_3Si_2	5,66	1/4	36	81	139,3	77	1,10
UN	6,75	1/4	43	81	116,8	65	1,10
UMo_9	7,74	1/5	39	63	127,4	69	1,07
UZr_4Nb_2	8,13	1/6	34	54	145,5	78	1,06
UMo_5	8,5	1/6	36	54	139,2	75	1,07

Fuel H10B'	Density ($gU.cm^{-3}$ meat)	Renewal fraction	$M(^{235}U)$ cons./year (kg)	Nb. El./year	Disch. BU. (GWd/t_U)	Disch. BU. (%)	$g^{235}U$/ MWd
U_3Si_2	4,8	1/3	46	108	108,1	62	1,13
U_3Si_2	5,66	1/4	41	81	122,2	69	1,11
UN	6,75	1/4	49	81	102,5	58	1,11
UMo_9	7,74	1/5	45	63	111,7	62	1,10

From the neutronic point of view, the most efficiently used fuels are U_3Si_2 (d=5.66) and UZr_4Nb_2. The latter allows an optimum use of fuel for a minimum yearly consumption of elements.

Besides their manufacturing abilities, their mechanical behavior and their reprocessing possibilities, these fuels must initially be qualified under irradiation to the discharge burnup values (probably over-estimated) obtained.

In the specific case of Nitride fuel, the capture reaction (n,p) on ^{14}N produces ^{14}C which is detrimental to fuel reprocessing. Based on conservative assumptions, we establish that the mass of ^{14}C formed per element is 54 mg.

2-3 : Simplified calculation model of JHR core lifetimes

The loss in lifetime due to the dispersing agent evolves in a quasi-linear way versus its average macroscopic cross section adjusted to 1 energy group.

Hence, this cross section can be simply approximated directly using the data in the literature, by distinguishing for each dispersing agent, the thermal absorption (Group 4) of the resonant absorption (approximated to 3 other macro-groups). It is expressed :

$$\boxed{\overline{\Sigma}_a = N_d \left(\sqrt{\frac{\pi}{4} \cdot \frac{T_0}{T}} \sigma_0 \chi^4 + \frac{I_R}{\ln \frac{E_2}{E_1}} \left(1 - \chi^4\right) \right)}$$

with :

$T_o = 293.45$ K
T = 323.45 K (average temperature of the moderator setting the average "temperature" of the neutrons)
σ_o = absorber microscopic cross section of the dispersing agent at 0.025 eV
IR = resonance integral of the dispersing agent (established in the E1, E2 energy range)
E1 = 0.5 eV (« limit » of the Cadmium)
E2 = 10 MeV
χ^4 = thermal contribution of the neutron spectrum (Group 4 = 0 to 0.625 eV)

Finally, we obtain : $$\boxed{\overline{\Sigma}_a \approx N_d \left(0{,}844 \sigma_0 \chi^4 + 0{,}059 I_R \left(1 - \chi^4\right)\right)} \quad (2)$$

The evolution law of the thermal component of the χ^4 neutron spectrum is deduced from transport calculations and is governed by the law :

$$\chi^4 = -0{,}0176\, dU + 0{,}2691 \quad \text{(H10B')} \qquad (3)$$

The loss in lifetime previously determined and plotted versus the average cross section calculated using the relations above, is represented in the figure below :

Fig.4 - H10B'model

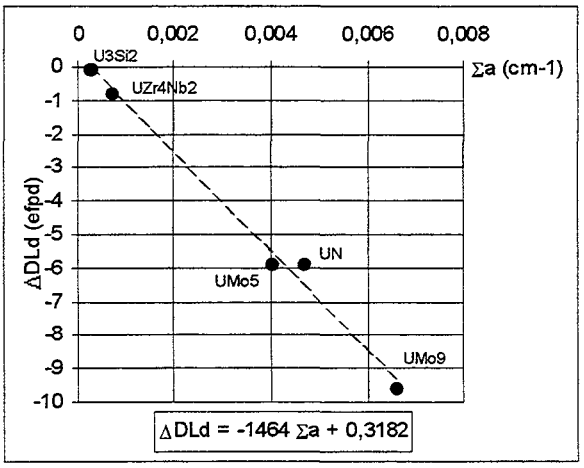

The linear law obtained is :

$$\Delta DL_d = -1464\ \Sigma_a + 0{,}3182 \text{ (H10B')} \qquad (4)$$

Using Laws (1) to (4) previously established, the lifetime of the JHR core evolving in one-batch mode is expressed, in the area studied, by :

$$\boxed{DL = DL_o + \Delta DL_d}$$

thus allowing to deduce the optimum fractionated renewal mode. This lifetime is slightly dependent on the value of the two thicknesses of the coolant channel.

2-4 : Conclusion about JHR neutronic calculations

Within the framework of the study on the use of LEU - MTR fuels, the densification in Uranium of the fuel plates is of interest to the Jules Horowitz Reactor core. Despite the significant penalizing reactivity effect on the lifetime due to the dispersing agent used (Nitrogen and Molybdenum), the lifetime can be approximately doubled when the density is doubled, which does not significantly affect the irradiation performances. However, the significant loss in efficiency of the mobile reactivity control absorbers and probably that of the burnable poisons will have to be countered.

Based on a simplified modeling of the present JHR core concept, we established the correlations which allow the simple calculation of the gains in lifetime expected from any dispersing agent, of a density between 4.8 and 8.5 g $U.cm^{-3}$, taking into account the basic nuclear parameters of the dispersing agent or of the several dispersing agents used.

A more rigorous study taking into account a more realistic modeling, such as the presence of experimental devices and the integration of burnable poisons, needs to be carried out.

In view of the usual delays involved in the development and qualification of new fuels, the latter can nevertheless only be envisaged in future JHR irradiation programs, the reference fuel presently foreseen for its startup being U_3Si_2 with a density of between 4,8 and 6 g $U.cm^{-3}$.

3 : THE FUEL REPROCESSING

Today the only proven back end solution for MTR spent fuels is the reprocessing. COGEMA is already proposing reprocessing services for Aluminide spent fuels, based on La Hague capability, and the reprocessing ability of the new LEU MTR fuels is a key issue for the spent fuel management. For this purpose, COGEMA is involved in the R&D activities to support this new fuel development .

The standard reprocessing operation for LWR spent fuel is summarized in the following diagram:

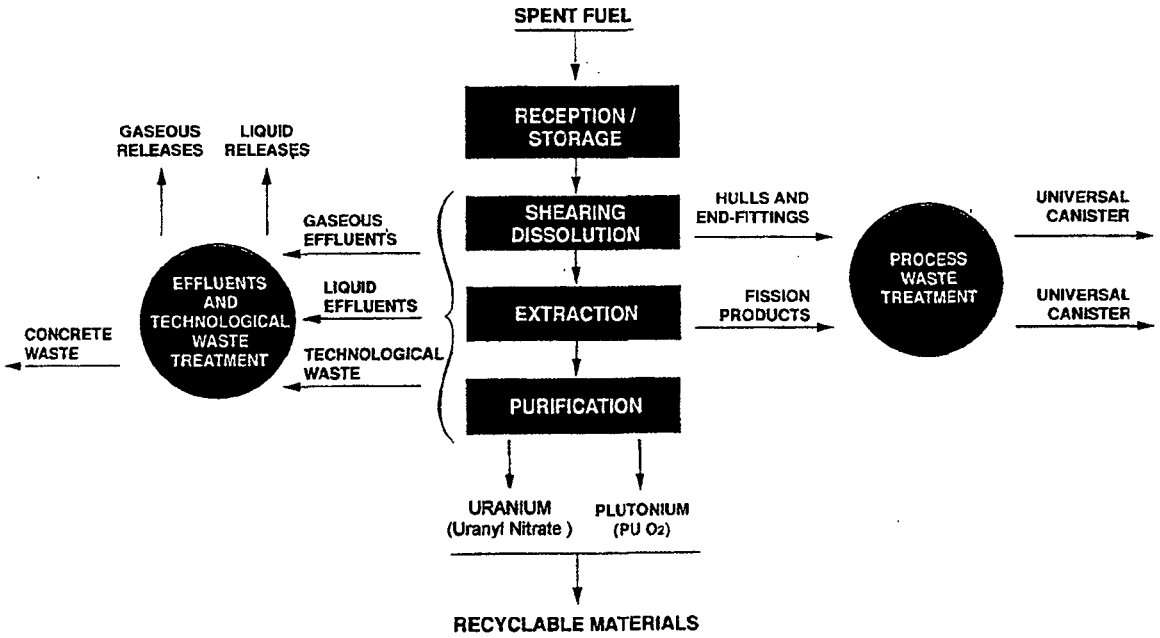

In the case of the MTR spent fuels, the diagram for reprocessing is the following :

- Reception of MTR spent fuels.
- Unloading under wet conditions.
- Storage in pool.
- Dismantling and dissolution.
- Dilution of dissolution mixture with LWR dissolution mixtures.
- Extraction and purification of Uranium and Plutonium.
- Vitrification of Fission Products.
- Treatment and conditioning of the wastes into residues.

Also, for reprocessing ability evaluation, the main step to be studied is the dissolution because after this step, the MTR dissolution mixture is diluted with a large amount of LWR mixture reducing significantly the impact on the following steps.

The standard dissolution conditions are the following :

- Boiling nitric acid.
- Final acidity of the mixture less than 3.5 N
- For MTR spent fuels, the final concentration of uranium in the mixture is limited by the aluminum solubility

In order to evaluate the behavior of the new fuel dispersant during the dissolution, COGEMA realized a R&D Program. The UN has not been included in this Program, because the feasibility of its dissolution has already been proven.

3-1 : The R&D Program

This Program has been implemented at the COGEMA/SEPA research laboratory which is mainly involved in ore treatment and natural uranium material tests and analysis.

The main objectives of this Program were :

- Dissolution kinetic evaluation.
- Quantities and nature determination of the residual solid if any.
- Evaluation of hydrogen in the gas produced for security purpose.
- Determination of the NH_4^+ concentration in the mixture also for security purpose.

A simple testing device has been designed for that purpose at the SEPA. It consist mainly of a laboratory vessel of 1 liter equipped with a total reflux condenser and a gas monitor
The sample weight around 20 g to have a final uranium concentration in the solution representative of the one obtained in the industrial process.

The sample was introduced in the vessel already filled with cold nitric acid. Then the temperature was increased slowly until boiling. Every hours, a solution sample was collected to be analyzed. At the end of the dissolution, the solution and the remaining solid was analyzed.

Laboratory testing divice for dissolution ability evaluation :

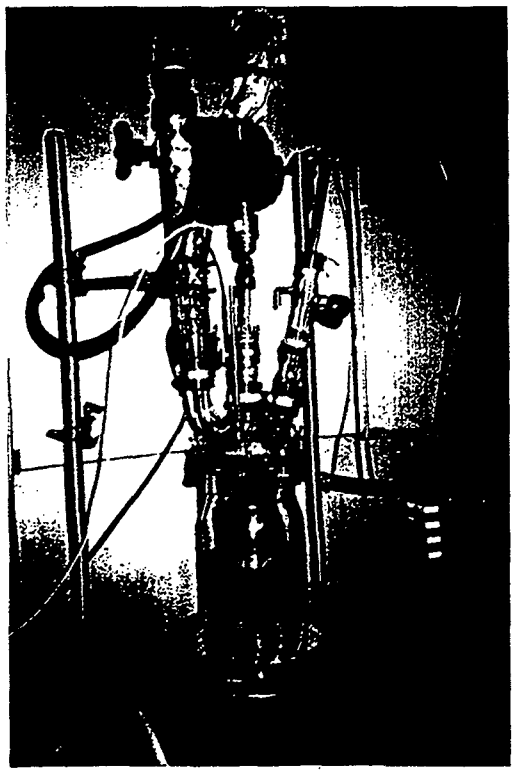

To realize this Program, CERCA provided us with depleted uranium fuel dispersants of UMo5, UMo9, UZr4Nb2, UZr3Nb9 in bulk solid pieces and in powder (particles size range of 40-90 µm or 90-125 µm)

Matrix	Al compacted powder	U-Mo5%	U-Mo9%	U-Zr4%-Nb2%	U-Zr3%-Nb9%
Preliminary test		N°1 HNO_3 3,5N		N°2 HNO_3 3,5N	
Solid pieces			N°3 HNO_3 3,5N		N°4 HNO_3 3,5N
Complementary Test on Solid pieces	N°9 HNO_3 3,5N final		N°6 HNO_3 3,5N + Al	N°7 HNO_3 3,5N + Chelating agent	
Powder			N°10 HNO_3 3,5N (1)	N°11 HNO_3 3,5N + Chelating agent	

(1) Compacted powder of UMo + Al

3-2 : Main results on dissolution

3-2-1 : Al dissolution

A test has been conducted with Al compacted powder for kinetic comparison purpose.
The reaction started at 75°C, with an important hydrogen production increasing with temperature. It was completed after 7 hours. The final mixture contained a significative amount of NH_4^+. The acid nitric consumption was around 3.8 moles per mole of aluminum (to be compared with theoretical value : 3.75).
This confirm that the dissolution is possible without any catalysis agent. Regarding the hydrogen production, the production rate could be monitored by adjusting the initial acid concentration and the temperature.

3-2-2 : UMo dissolution

These tests show a very good behavior of UMo regarding dissolution.
No solid residue and no precipitate have been found at the end of the dissolution which is quite fast (less than 5 hours for bulk solid pieces).
The test with the UMo + 9.3% Al compacted powder shows a high reactivity : the dissolution started at 65°C and has been completed in around 30 mn. If necessary, in the industrial process, this reactivity can be monitored with the temperature parameter.
The tests show also that no significant quantities of hydrogen or ammonium ion has been formed.
The dissolution kinetic is close to the one observed with UO_2 fuels.
According to this preliminary results, the UMo appears to be a really good candidate for its dissolution behavior.

3-2-3 : UNbZr dissolution

During the first test with nitric acid alone, the dissolution has been much longer than in the case of UMo (from 24 to 48 hours for bulk solid pieces). As soon as the dissolution started, the dissolved Nb and Zr elements precipitated. At the end, the precipitate represented a few percent of the initial mass, while the residual solid represented another 5%.

Some complementary tests allowed us to define an appropriate chelating agent to avoid this precipitate for Nb and Zr. With this chelating agent, the complete dissolution for powder should be reached after 10 to 20 hours. Due to an experimental device failure, the corresponding test has to be done again. But the analysis of the partial results allows us to suppose that the dissolution will be complete, with no residual solid and no precipitates.

The dissolution kinetic seems to be of the same order of magnitude as for Metallic Uranium fuels.

3-3 : Extraction and vitrification aspects

3-3-1 : Extraction

As stated before, the dilution rate of the MTR dissolution mixture with the LWR mixture is high enough to say that no impact is forecasted on the extraction units. But, in the case of UZrNb, the addition of a chelatic agent could disturb the solvent extraction process. This point has to be checked by a specific R&D Program.

3-3-2 : Vitrification

The elements Mo, Zr, and Nb are already present in LWR spent fuels as fission products.
The reprocessing of MTR spent fuel is limited by the aluminum content of the MTR fuels.
Tacking into account this aluminum limitation, the impact of new fuel dispersants has been evaluated regarding the vitrified residue composition in comparison with LWR fuels alone :

- For UN, the N element has no impact on vitrification
- For UMo, the Mo content increase of a maximum of 2% (for UMo9)
- For UZrNb, the Zr and the Nb content increases are negligible

Also, for these new fuel dispersants, the slight increase of Mo, or Zr and Nb, will have no significant impact on the vitrification process. Further, the already internationally approved specification of the vitrified fission products residue will be met.

3-4 : Conclusions about fuel reprocessing

This preliminary review of the new fuel dispersants, candidates for a high density fuel development, allows us to classify them, regarding the reprocessing ability, as follows :

- At the first rank, we will place UMo and UN. The reprocessing of such fuels will be very similar to aluminide fuels.

- Then will come UZrNb fuels. The management of Zr and Nb precipitates will mean the addition of a chelating agent which might have some disturbing effects in the case of a real dissolution mixture containing a wide range of chemical species.
A specific R&D Program will be necessary to evaluate these effects.
In addition, the dissolution kinetics is less favorable than for UMo

The choice of a new fuel dispersant will obviously rely also on fabrication and irradiation behavior matters. But, to allow the operators to run smoothly their Research Reactors in the future, it is essential that a new fuel development includes the insurance of a steady back-end solution.

CONCLUSION :

There is not one fuel candidate which is prefered simultaneously by all the three steps of the fuel cycle: the manufacture , the irradiation and the reprocessing .

A compromise must be find between the neutronic performances (low alloy content needed) and the thermal stability which require high alloy content.

In any case, the reprocessing feasibility has been demonstrated . After UN , the UMo alloys seem to be significantly easier to reprocess as compared to UNbZr

As a preliminary conclusion, a UMo alloy with a quite low Mo content and an additive to enhance its thermal stability might be a good compromise.

This point of view has to be considered as a first evaluation approach linked to the French needs and production processes. It could be a basis for further discussion with each international actor involved in the development of a new LEU MTR fuel.

References :

[1] : DEVELOPMENT OF VERY HIGH DENSITY FUELS BY THE RERTR PROGRAM
presented at the RERTR meeting in SEOUL (KOREA) , October 1996
by J.L. Snelgrove, G.L. Hofman , C.L. Trybus , T.C. Wiencek
Argonne National Laboratory (ANL) ; Argonne , Illinois , USA

[2] : DEVELOPMENT OF HIGHER DENSITY FUEL AT CERCA
Presented at the RERTR meeting in Roskilde (DENMARK) , October 1992
by JP Durand , Y. Fanjas , A. Tissier (CERCA)

[3] - B. BARRE - F. MERCHIE - P. RAYMOND - S. FRACHET - B. MAUGARD - « REX 2000 : a new material testing reactor project », Proceedings of the « Research Facilities for the future of Nuclear Energy » ENS topical meeting, June 4-6, 1996, Brussels, Belgium.

[4] - B. MAUGARD - D. GALLO - S. FRACHET - P. RAYMOND - F. MERCHIE - « REX 2000 core : a new material testing reactor project », Proceedings of the « Breakthrough of Nuclear Energy by Reactor Physics » PHYSOR 96, September 16-20, 1996, Mito, Ibaraki, Japan.

[5] - S. FRACHET - P. MARTEL - B. MAUGARD - P. RAYMOND - F. MERCHIE - « The 'reactor Jules Horowitz' : a new experimental reactor project », Proceedings of the 5th International Conference on Nuclear Engineering ICONE 5, May 26-30, 1997, Nice, France.

CH0100332

FUEL CYCLE FOR RESEARCH REACTORS IN THE EUROPEAN UNION

presented at the 2nd International Topical Meeting
Research Reactor Fuel Management (RRFM)

on March 29 - 31, 1998 in Bruges, Belgium

by

Hans Müller
General Manager Fuel Cycle Services
NUKEM Nuklear GmbH, Industriestrasse 13, D-63755 Alzenau, Germany

Abstract

In the European Union (EU) there are altogether 77 research reactors in operation, a large number of them being used for teaching and university research proposes as well as for fundamental research. The trend for the remaining and planned reactors is to enlarge their capacity by compact cores in order to increase neutron yields and power. Also the use of research reactors for the production of radioisotopes for medical diagnosis and treatment and therapeutic purposes has become more and more common. In addition to the 77 research reactors in operation (in the EU) there is a number of 72 reactors which have been shut down.

To serve the needs of the research reactors in the European Union a vital and self-confident industry has been developed which also exports nuclear technology and fuel for peaceful purposes.

The problems today in the fuel cycle lie in the disposal of spent research reactor fuel and the procurement of fresh fuel with U-235 assays above 20 %.

This paper provides a summary of specific activities by European companies in the individual steps of the fuel cycle for research reactors.

1) Breakdown of operating and shut-down research reactors in the European Union

At the moment there are 77 research reactors in operation in the EU (see overhead 2). A breakdown of the number of operating research reactors in each member state is given in overhead 3. It is remarkable that a further 72 shut down research reactors which have fulfilled their purposes are ready or currently undergoing decommissioning. In two member states, France and Germany, two new research reactors are being constructed (the new research reactor FRM 2 in Munich, Germany with 20 MW, operation in 2001 and the Reactor Jules Horovitz at Cadarache, France with 100 MW, operation in 2005.).

This will bring the total power of the existing operational research reactors from at present 645 MW to 765 MW (see overhead 4).

2) Construction of research reactors in the EU

Two main vendors of research reactors are available in the EU, the French Technicatome and the German Power Generating Division (KWU) of Siemens. Technicatome will construct the new Jules Horovitz reactor in France and KWU is currently constructing the new Munich research reactor (see overhead 5).

With regard to exports of reactor-technology, Siemens constructed in the mid-eighties the MPR-30 reactor in Indonesia together with all installations.

3) Fabrication of fuel elements for research reactors (see overhead 6)

There are two fabricators of fuel elements for research reactors in the EU, the French CERCA and the Scottish UKAEA. After giving up fuel element production by NUKEM in 1988, CERCA became the world's largest fabricator of research reactor fuel elements. In the following I give you some characteristics on both companies.

a) CERCA (see overhead 7)

- supplies fuel elements for research reactors with dispersed fuel and silicide fuel
- has a strong position in the national French and EU-market
- exports fuel elements to Japan, rest of Europe, USA and Far East
- manufactures Triga fuel elements

b) UKAEA (see overhead 8)

- supplies fuel elements for DIDO type reactors
- exports fuel elements to Australia
- manufactures fuel elements using reprocessed uranium

4) Transporters of nuclear fuels

There are two main transport companies for nuclear fuels for research reactors in Europe, Transnucléaire in Paris (TNP), France and Nuclear Cargo and Services (NCS), Hanau, Germany. Both offer specialist services as part of their overall activities in the nuclear fuel cycle, dominated mainly by transport services for power reactors (see overhead 9).

5) **Development of casks for the needs of the research reactors in the EU**

For the transport of nuclear fuels (unirradiated and irradiated) for research reactors special containers and security vehicles are necessary.

The main countries developing and constructing such containers are France and Germany (see overhead 10). Within France and Germany the following companies are active in this field:

a) Transnucléaire, France
b) CERCA, France
c) NCS, Germany
d) GNB, Germany

6) **Uranium chemistry for research reactors** (see overhead 11)

There are two sites for uranium chemistry for the needs of research reactors available within the EU, COGEMA at Pierrelatte, France and UKAEA at Dounreay, Scotland (see overheads 12 and 13).

Both sites render a full uranium chemistry for uranium with U-235 assays up to 93 %. Moreover, the Dounreay site is able to remove Plutonium from available fuels.

7) **Reprocessing of spent research reactor fuels** (see overhead 14)

In the EU there are two installations available for the reprocessing of spent research reactor fuel. These are COGEMA at La Hague, France and UKAEA at Dounreay, Scotland.

In the following I list the characteristics of both installations.

a) COGEMA (see overhead 15)

Capacity:	5 - 6 tons of heavy metal (HM) p.a.
Period acceptance:	for storage now reprocessing will start as of the year 2000
Type of spent fuel:	U/Al
Process:	spent fuel will be fed into the main LWR-stream, therefore dilution of U-235 content to 1 %, waste return to customer
Market:	French and Belgian research reactors

b) UKAEA (see overhead 16)

Capacity:	2 tons heavy metal (HM) p.a.
Period acceptance:	now
Type of spent fuel:	U/Al, Triga fuel
Process:	dissolution of fuel to UNH, the U-235 assay can be kept at the level of burn-up, waste return to customer
Market:	EU and Australia

8) Availability of fresh nuclear fuel for research reactors within the EU

(see overhead 15)

In the EU there are sufficient stocks of uranium of U. S. origin having a U-235 of 19.75 % (LEU) available to ensure feeding of the research reactors far beyond the year 2000. The US origin of LEU is of importance for the EU-reserach reactors in order to return the spent fuel to the USA until the deadlines of 2006 and 2009 respectively.

With regard to the use of highly enriched uranium (HEU) for the five high flux reactors in the EU, (four operating and one under construction) further ways have to be found to ensure its availability after the stop of HEU supplies by the USA in 1991. As a consequence of the stop of US-supplies of fresh uranium after 1991 (both LEU and HEU), manufacturers of research reactor fuel elements, the operators of uranium chemistry facilities and the research reactor operators in the EU had to experience also to cope with the use of available fuel stocks from reporcessed uranium and Zero-experiments to overcome the shortage of LEU and HEU. It was also NUKEM to concentrate on the acceptance of such used fuels and to help to develop successfully adopted specifications. Until now, there was no stoppage in the operation of the four operating reactors.

9) Summary and conclusion

This paper represents a summary on the research reactor community including the necessary industry and service companies within the EU. As a citizen of the EU I am proud to come to the conclusion that this research reactor community is a self confident and vital one. It is moreover an internally well known and respected community.

CH0100333

PROGRESS OF THE U.S. RERTR PROGRAM

A. Travelli
Argonne National Laboratory
Argonne, Illinois, USA

ABSTRACT

The progress of the Reduced Enrichment for Research and Test Reactor (RERTR) program since 1978 is reviewed with special emphasis on last year's progress.

New advanced fuels are being developed with uranium densities well in excess of the 4.8 g/cm^3 earlier achieved by the program.

Analytical studies to assess the feasibility of using LEU have been in progress during the past year for several reactors including the HFBR (U.S.), HFIR (U.S.), BMRR (U.S.), MARIA (Poland), LVR-15 (Czech Republic), VVR SM-10 (Hungary), and FRM-II (Germany).

Twenty-eight reactors in seventeen countries have been converted or are converting to LEU fuels. Conversions of the IAN-R1 (Colombia), SL-2 (Canada), and IEA-R1 (Brazil) were completed during the past year. Conversion of the BER-II (Germany) began.

Four spent research reactor fuel shipments to the Savannah River Site, containing 822 fuel assemblies, have been completed in accordance with the new U.S. spent fuel policy. Good progress has been made in the development of LEU-based processes to produce ^{99}Mo, and in the Russian RERTR program.

1. Introduction

The mission of the Reduced Enrichment for Research and Test Reactors (RERTR) program is to develop the technical means needed to minimize, and eventually eliminate, use of highly-enriched uranium (HEU) in research and test reactors throughout the world. To do this, the program develops low-enriched uranium (LEU) fuels and devices that can be substituted for the corresponding HEU fuels and devices without significant penalty in experiment performance or costs, and without degradation in safety. By pursuing this mission, the program seeks to reduce the probability that international traffic and use of HEU might lead to a dangerous proliferation of nuclear weapons.

The RERTR program is close to its twentieth anniversary and is conducted in close cooperation with technical institutes in a large number of countries which share the same goals. Annual meetings assist greatly the free exchange of information. The last meeting was held in Jackson Hole, Wyoming, on 5-10 October 1997. The next meeting is scheduled to occur in São Paulo, Brazil, on 18-23 October 1998.

2. Fuel Development

In the area of fuel development, after developing, testing, and qualifying several already existing fuel types containing low-enriched uranium (LEU) with gradually increasing uranium density, the RERTR program qualified the LEU U_3Si_2-Al dispersion fuel with a uranium density of 4.8 g/cm^3. This density is approximately three times greater than the highest uranium density achieved in plate-type fuels before the program began. In addition, TRIGA fuels with uranium densities up to 3.7 g/cm^3 were developed by General Atomics and demonstrated by the RERTR program. Through the use of these fuels and of other fuels that the RERTR program developed before 1985, it became technically feasible to convert to LEU fuels nearly 90% of the research reactors which used uranium supplied by the U.S. or by other Western countries.

The LEU fuels developed by the RERTR program are now fabricated and marketed by many international companies, including the CNEA, in Argentina (U_3O_8-Al); CRL, in Canada (U_3Si-Al); RISØ, in Denmark (U_3Si_2-Al); CERCA, in France (U_3Si_2-Al, $UZrH_x$); and BWX Technologies, U.S.A. (U_3Si_2-Al, U_3O_8-Al) . Other companies that are now establishing the capability to produce fuel types developed by the RERTR program include IPEN, in Brazil (U_3O_8-Al); CCHEN, in Chile (U_3Si_2-Al); BATAN, in Indonesia (U_3Si_2-Al, U_3O_8-Al); KAERI, in Korea (U_3Si-Al); and AEA Technology, in the United Kingdom (U_3Si_2-Al). Thousands of elements of the fuel types developed by the RERTR program have been fabricated by these companies and successfully used in new or converted LEU research reactors.

After achieving successful qualification of the U_3Si_2-Al fuel, the fuel development activity of the RERTR program was interrupted by a perception that only a few additional conversions could be achieved through better fuels. This perception, however, changed in 1996, when fuel development activities were restarted in earnest. With the new fuels that the revived fuel development program strives to develop, all research and test reactors operating today will be technically able to convert to LEU; reactors that have already converted to LEU will be able to extend their fuel life or to improve their experiment performance by increasing their power; it will be feasible to build new, high-performance LEU research reactors with better performance than is feasible today; and new efficient fuel types will be available for application in reactors of different designs supplied by China and Russia.

Our current activities in the fuel development effort are concentrated on uranium alloys such as U-Mo and U-Zr-Nb. Two identical rigs, each containing 32 microsamples of 14 different fuels have been fabricated and began to be irradiated in the Advanced Test Reactor, in Idaho, on August 23, 1997. The first rig reached ~40% burnup at the end of November 1997 and was recently shipped to Illinois for post-irradiation examinations. The second rig will continue to be irradiated until June 1998, when its burnup will be close to 70%. The next phase of the fuel development program will depend on the results of these tests.

3. Reactor Analysis

Another important activity of the program concerns the development of methods and codes to study the performance and safety characteristics of reactors operating with the new LEU fuels. The methods and codes which were developed or adapted address the neutronics, thermal-hydraulics, transient analysis, fuel cycle, and radiological consequences of the reactors, and have proven to be very accurate. Generic and specific analyses based on the use of these methods and codes have been published in three IAEA Guidebooks (TECDOC-233 for H_2O reactors,

TECDOC-324 for D_2O reactors, and TECDOC-643 for safety and licensing.) Extensive studies have been conducted, with favorable results, on the performance, safety, and economic characteristics of LEU conversions. These studies included many joint study programs concerning 32 reactors in 21 different countries.

Feasibility and conversion studies that were concluded during the past year or that are now in progress concern the the High Flux Beam Reactor (HFBR) at the Brookhaven National Laboratory, USA; the High Flux Isotope Reactor (HFIR) at the Oak Rdge National Laboratory, USA; the Brookhaven Medical Research Reactor (BMRR) at the Brookhaven National Laboratory, USA; the MARIA reactor at the IEA Institute, Poland; the LVR-15 reactor at the NRI Institute, the Czech Republic; and the VVR SM-10 reactor at KFKI-AEKI, Hungary.

The study of an alternative LEU core which could provide the same experiment performance and the same fuel lifetime as the HEU core currently planned for the FRM-II has continued, in order to address technical issues that were raised during the past two wears. These extended studies, addressing fluxes at experimental facilities in HEU and LEU designs for the FRM-II, have yielded very favorable results of the performance that could be expected from the alternative LEU core.

4. Reactor Conversions

In parallel with the development of new fuels and computational methods, many research reactors have decided to convert from HEU to LEU fuels. Today, 28 reactors in 17 countries have either converted or are converting to LEU fuels (Table I). Reactors in which significant changes have occurred during the past year include the IAN-R1 reactor in Colombia, which was converted from HEU MTR-type fuel to LEU TRIGA fuel; the Slowpoke reactor at the Ecole Polytechnique in Montreal, Canada, which was converted to LEU UO_2 Slowpoke fuel; the BER-II reactor at the Hahn-Meitner Institute in Berlin, Germany, where the first LEU fuel elements were inserted; and the IEA-R1 reactor at the Instituto des Pesquisas Energéticas e Nucleares, in Brazil, whose conversion to Brazilian-manufactured U_3O_8-Al fuel was completed.

In addition, nine new research reactors in nine countries have been built, or are being built, with the new LEU fuels developed by the RERTR program (Table II). It must be noted, however, that the design of the FRM-II core under design at the Technical University of Munich continues to be based on the use of HEU fuel.

5. Spent Fuel Return

After publication of the Final Environmental Impact Statement for the return of spent research reactor fuel and the related Record of Decision (February 1996 and May 1996, respectively,) four spent research reactor fuel shipments containing 822 fuel assemblies have been completed to the Savannah River Site. These shipments, along with planned shipments to the Idaho National Engineering and Environmental Laboratory, are expected to eliminate, over a thirteen year period, the large inventories of spent fuel which currently fill the pools and storage facilities of many research reactors. The process will resolve urgent operational problems at the reactor sites while, at the same time, eliminating a serious proliferation concern. The RERTR program continues to provide both support and motivation for this effort.

6. Fission ^{99}Mo from LEU Targets

An analytical/experimental program is in progress to determine the feasibility of using LEU instead of HEU in fission targets dedicated to the production of ^{99}Mo for medical applications. The goal is to develop and demonstrate during the next few years one or more viable technologies compatible with the processes currently in use with HEU at various production sites throughout the world. This activity is conducted in cooperation with several other laboratories including Sandia National Laboratories (SNL), Los Alamos National Laboratory (LANL), the University of Texas, and the Indonesian National Atomic Energy Agency (BATAN). A method for UO_2-Al LEU dispersions to be processed through alkaline dissolution is under study. A second series of LEU metal-foil targets was irradiated in the RSG-GAS research reactor at BATAN, and a third series is being prepared for irradiation to begin in May 1998. These tests are to optimize the design of LEU metal-foil targets, which can be processed through acidic or, possibly, alkaline dissolution. The chemical processes to be used in combination with the LEU metal foils are being refined and tested, and an improved method to apply fission recoil barriers to the foils is being developed.

7. Russian RERTR program

Cooperation with the Russian RERTR program started in January 1996. The main Russian organizations taking part in this effort include the Research and Development Institute for Power Engineering (RDIPE), the All-Russian Research and Development Institute of Inorganic Materials (VNIINM), the Novosibirsk Chemical Concentrates Plant (NZChK), and the Russian Research Center "Kurchatov Institute." The purpose of the activity is to conduct the studies, analyses, fuel development, and fuel tests needed to establish the technical and economic feasibility of converting Russian-supplied research and test reactors to the use of LEU fuels.

UO_2-Al fuel elements with uranium densities up to 3.85 g/cm^3 have been produced and irradiated. Some fission product releases have occurred, indicating either the need to refine the fabrication processes or to reduce the uranium density. The causes of the releases will be investigated during the coming year. In addition, irradiation samples to test higher density fuels have been produced and will be irradiated during the coming year.

8. Conclusion

The RERTR program has achieved many of its original goals, and continues to make good progress. The pace of the progress has been particularly intense during the past two years, with the success of the spent fuel return program, the beginning of the Russian RERTR program, and the resumption of the fuel development activities. The new advanced fuels will enable conversion of the reactors which cannot be converted today, ensure better efficiency and performance for all research reactors, and allow the design of more efficient and powerful new advanced LEU reactors.

As in the past, the success of the RERTR program will depend on the free exchange of ideas and information, and on the international friendship and cooperation that have been a trademark of the RERTR program since its inception.

TABLE I - CONVERTED REACTORS

NO.	COUNTRY	REACTOR	POWER	BEGIN	END
1	Argentina	RA-3	2.8 MW	1990	1990
2	Austria	ASTRA	8 MW	1983	1990
3	Brazil	IEA-R1	2 MW	1981	1997
4	Canada	NRU	125 MW	1992	1993
5	Canada	SL-2, M	20 kW	1997	1997
6	Colombia	IAN-R1	30 kW	1997	1997
7	Denmark	DR-3	10 MW	1988	1990
8	France	OSIRIS	70 MW	1979	1979
9*	Germany	BER-II	10 MW	1997	1998
10	Germany	FRG-1	5 MW	1991	1991
11	Iran	NCRR	5 MW	1991	1991
12	Japan	JMTR	50 MW	1993	1994
13	Pakistan	PARR	5 MW	1991	1991
14	Philippines	PRR-1	1 MW	1987	1987
15*	Romania	SSR	14 MW	1992	2002
16	Sweden	R-2	50 MW	1990	1993
17**	Switzerland	SAPHIR	10 MW	1986	1996
18	Taiwan	THOR	1 MW	1978	1987
19*	Turkey	TR-2	1.5 MW	1995	1998
20	USA	FNR	2 MW	1981	1983
21	USA	RPIR	100 W	1987	1987
22	USA	OSURR	10 kW	1988	1988
23	USA	WPIR	10 kW	1988	1988
24	USA	ISUR	10 kW	1991	1991
25	USA	MCZPR	0.1 W	1992	1992
26	USA	UMRR	200 kW	1992	1992
27	USA	RINSC	2 MW	1993	1993
28	USA	UVAR	2 MW	1993	1993

*conversion in progress **shut down

TABLE II - NEW LEU REACTORS

NO.	COUNTRY	REACTOR	POWER
1	Algeria	NUR	1 MW
2	Bangladesh	TRIGA	3 MW
3*	Canada	Maple-X	10 MW
4*	China	CARR	60 MW
5*	France	RJH	100 MW
6	Indonesia	RSG-GAS	30 MW
7	Japan	JRR-3	20 MW
8	Peru	RP-10	10 MW
9	South Korea	HANARO	30 MW

*under design or construction

Session 3:

Reactor operation and fuel safety

CH0100334

RESEARCH REACTOR SAFETY
AN OVERVIEW OF CRUCIAL ASPECTS

Michel LAVÉRIE
Director of Nuclear Safety and Quality
Atomic Energy Commission - France
Saclay Centre - 91191 GIF-SUR-YVETTE

ABSTRACT

Chronology of the commissioning orders of the French research reactors illustrates the importance of the time factor. When looking at older reactors, one must, on one hand, demonstrate, not only the absence of risks tied to the reactor's ageing, but, on the other hand, adapt the reactor's original technical designs to today's safety practices and standards. The evolution of reactor safety requirements over the last twenty years sometimes makes this adaptation difficult.

The design of the next research reactors, after a one to two decades pause in construction, will require to set up new safety assessment bases that will have to take into account the nuclear power plant safety evolution.

As a general statement, research reactor safety approaches will require the incorporation of specific design rules for research reactors : experience feedback for one of a kind designs, frequent modifications required by research programmes, special operational requirements with operators/researchers interfaces...

1 - INTRODUCTION

Handling of research reactors safety requires a total system approach involving the reactor's operating organisation, as well as in its organisational and human components, as in its technical and operational components.

Over the years, operating evidence confirms the high degree of safety attained and maintained by research reactors.

The objective of this paper is not to describe all the areas in which the reactor should be controlled, but to rather highlight areas in which research reactors require special attention.

In this light and in reference to the current French practices, I wish to submit to your appreciation two subject areas:

- those in which time is considered as an essential factor;

- those which permanently constitute the safety design bases for these particular nuclear facilities which are research reactors.

2 - CHRONOLOGICAL EVOLUTION OF RESEARCH REACTOR SAFETY REQUIREMENTS

2.1 - Some dates

The below table indicates a chronology of the French research reactors commissioning orders.

CIVIL RESEARCH REACTOR
CHRONOLOGY

REACTOR	SITE	CRITICALITY
Mélusine	Grenoble	58/07/01
Minerve	Cadarache	59/09/29
Ulysse	Saclay	61/07/27
Cabri	Cadarache	63/01/01
Siloé	Grenoble	63/03/18
Pégase	Cadarache	63/04/01
Siloette	Grenoble	64/02/01
Harmonie	Cadarache	65/08/01
Eole	Cadarache	65/12/02
Isis	Saclay	65/04/28
Osiris	Saclay	66/09/08
Strasbourg (RUS)	Strasbourg	66/11/22
EL4	Brennilis	66/12/01
Masurca	Cadarache	66/12/19
Rapsodie	Cadarache	67/01/01
High Flux Reactor (ILL)	Grenoble	71/07/01
Phénix	Marcoule	73/08/31
Phébus	Cadarache	78/08/09
Orphée	Saclay	80/12/19
Scarabée	Cadarache	82/01/01

Two points are worth noting:

- the majority of reactors still in service are of an advanced age. Many have been recently closed, others will be decommissioned within the next few years. However, some of these still offer interesting technical possibilities. It would be desirable to maintain these in operation for several more years.

- after having constructed fairly regularly new facilities up into the early eighties, the construction of new facilities came to nearly an abrupt halt. We have relatively little recent experience in their design and construction. There is also little jurisprudence on recent research reactors emanating from regulatory authorities.

2.2 Evolution of safety requirements

A very significant evolution of safety requirements has occurred for all nuclear reactors over the earlier described period. These modifications where initiated by input from both reactor operators and safety authorities.

Research reactors are totally concerned by this general evolution, although they haven't been at the centre of the debate. Because of this, safety requirements specifically adapted to their cases are not always clearly mentioned in official papers. However, it is more and more evident that the objectives pertaining to nuclear power plants serve as a reference point, including the most recent project developments (such as, for instance, those related to the EPR project).

Consequently, an important work must be undertaken to determine the modes of adaptation. From this point of view, next research projects will be very important stakes.

If the duo probabilities/consequences of an accident remains an essential element to the project's coherence, it can be noted that an increased attention is given to each individual component separately taken into account as an acceptability element:

- the accident global probability is evaluated no matter its significant consequence. As a corollary to this, the concept of "defence in depth" has become more refined and one verify more closely probabilistic coherence of the safety for all types of other possible scenarios.

- the "overall" consequences are evaluated whatever the probability of the accident. Similarly, the evaluation of confinement efficiency versus all types of accident scenarios has taken on increased importance.

Concerning the reactor's more technical aspects, we note requirements strengthening, especially on:

- reliability of the design, construction and operation guaranteed by an organisation of certified quality;
- better control of back end fuel cycle activities (effluents, wastes, dismantling and decommissioning);
- fire hazard assessment;
- external hazards assessment, notably seismic risks ;
- the need to identify and respond to a whole host of scenarios (reactivity control is an example : it will not be acceptable to limit ourselves to a "overall" approach covering imperfectly identified scenarios;
- assessment, from the initial design studies, of accidental events and scenarios with severe consequences.

It can be further stated that for each safety system, the concept of "demonstration" has been re-enforced. No longer is a "strong presumption" sufficient, proof with "quasi-absolute certainty" is now required.

Finally, it should be noted that reactor safety issues are no longer the private matter of specialists. Safety issues have become more open and readily explained to the public, as are any abnormal conditions or incidents that may occur.

2.3. Application of these trends to future research reactors.

It is uncertain to foresee what the practical and precise application of these evolutions on the next research reactors will be. This is yet the difficulty to overcome.

The quality of technical discussions among operators and safety officials will be fundamental. It will be the operators obligation to provide solid proof of the reactor's safety, taking into account the most recent requirements references and in carefully justifying specific adaptations necessities, or the possibilities of less stringent requirements (tied, for example, to the radioactive inventory in the core or to particular operating conditions).

We clearly can see that safety of future reactors must be demonstrated, and not merely extrapolated from older research reactors.

Further, these projects do not have necessarily validated set of codes and standards taking into account their specific nature and the age of their predecessors. Finding usable reference elements and completing them as needed will be a necessity.

Finally, one would have to question ourselves on the complexity of research objectives assigned to the future reactors and therefore on the complexity of the reactors themselves . The reduction of the number of research reactors may make assigning multiple tasks to these reactors tempting (spectrums, flux, experimental devices...). Safety, under these conditions, should not be reduced or forgotten.

2.4. Older reactors

The periodic re-evaluation of older research reactors safety has a double objective, "ageing" and "reassessment":

- verify if there hasn't been any safety degradation due to reactor ageing and that the experience feedback is correctly integrated to the reactor's safe operations : this is done over the reactor's continuous conformity to the initial operating licence standards.

- compare older operating safety standards to today's safety requirements and see how the facility could comply to today's standards. If impossible or unrealistic, the reactor's operating conditions or remaining life would have to be modified.

2.4.1. Ageing

Maintenance should bring the necessary warranties. Special attention should be placed on specific modes of reactor's ageing (for instance, under-irradiation ageing).

The major and the one most frequently encountered obstacle resides in the difficulty, even the impossibility, to inspect in-service certain of the reactor's components. Demonstrations based on the quality of design and construction are not sufficient to legitimate continued operation without component controls. The inability to field inspect critical reactor parts is a leading factor in the shutdown of certain older designed research reactors.

From this, two lessons should be learned:

- the need to develop, in a timely fashion, inspection techniques, tools and inspection accessibility for existing reactors;

- the importance, to include during the reactor's design, easier access to the reactor's part requiring inspection.

2.4.2. Adaptation to new regulations

Full compliance of older research reactors to new safety regulations are often problematic in practice.

It requires a complex discussion between reactor operators and safety authorities, especially when no clear directives on the assessment determination are presented in regulation papers.

The subsequent strengthening of certain safety regulations and the examination of certain scenarios not initially foreseen constitute an area requiring profound study, whose importance for safety is not questionable. It is normal that the level of assurance associated to earlier safety justifications be reconfirmed.

But, unfortunately, all is not possible when regulation evolution has not been anticipated. The most evident example or oversight, technically difficult to retrofit and economically expensive to correct for, is the seismic risk assessment. Regulatory evolution around earthquake protection measures has grown considerably. This evolution continues to grow. Retrofit attempts of older reactors often reveal the limits of both technology and economics, bringing, without a doubt, to a definitive shut-down of certain facilities in a yet to be determined delay. The applicable rules to this transitions should be clarified, perhaps while employing a certain pragmatism. It suffices notably to specify under what conditions a drastic reduction in radioactive inventory could be used, provisionally, as an acceptable compensatory measure.

III - A FEW OTHER FUNDAMENTAL ASPECTS OF RESEARCH REACTOR SAFETY

3.1. Original characteristic of each facility.

Every research reactor is a special case. Its design and construction requires a broad range of skills. Proof of its inherent safety is specific : its unique safety system must be justified. Further, the system's operations, the reliability of its components and their ability to be inspected must be shown.

An optimum should be sought between the existence of important safety design margins making safety demonstration easier and the economic considerations leading to a smaller margins design and therefore to more difficult justifications. Nonetheless, we should constantly kept in mind the objective of inherently safe design characteristics.

Careful research reactor design is even more important than for other reactors, as they are typically of a unique design and cannot easily profit from the experience gained in designing and operating other reactors. Further, experience feedback is rarely direct : no event is directly applicable to other configurations. One must therefore exercise a veritable will and great care whenever transporting or extrapolating information gain from similar, but not exactly identical or more or less similar situations. This will should notably express itself in an indispensable periodic re-evaluation of safety parameters and factors.

3.2. Reactor evolution related to research programmes

The imperatives of research programmes, difficult to anticipate, leads to frequent modifications to the facilities or the associated experimental devices.

These modifications require a careful, thorough and detailed re-appraisal of the reactors safety considerations in order to bring coherence to and avoid the most probably potential failures in the reactor's defence in depth. These concerns, being evidently shared by regulatory authorities, these modifications often require and bring about a long review of the reactor's regulatory procedures, which are at odds with the more supple requirements of research programmes.

It is therefore important for research facilities that an increased effort be undertaken to anticipate their becoming and the associated eventual modifications to their initial designs. In turn, regulatory authorities, should, as far as possible, integrate the need for future changes, in their procedures.

3.3. The inviolable character of safety standards

In this changing environment, the organisation of the operator and his operating procedures should be so construed to insure the application of the inviolable character of safety standards.

These standards should not only be composed of requirements issued by regulatory authorities, but also from documents provided by the reactor's operator themselves based on established and demonstrated reactor safe operational procedures. These documents most likely should include : safety reports, general operating procedures and internal emergency response plans.

Modifications to standard operating procedures should be possible, but only after undergoing an explicit review and approval procedure.

Eventual older practices or common operating procedures based on past experience that were informally tolerated in the past should no longer be allowed today. All of today's procedures should be dully approved and documented before being applied as standard operating procedure.

3.4. The operating context of a research reactor

Research reactors operation presents certain specific situations, notably within the operators/researchers interface. Safety culture and practices must be similarly followed and practised daily by both functions.

The nuclear reactor plant manager, responsible for both reactor operation and safety, should, without question, exercise direct authority over both operators and researches present on the plant site. He should be able to appreciate and control the various risks that may occur during an experiment, be its risks associated with the experiment itself or associated with the presence of researchers and operating personnel within the confines of the facilities under his authority.

3.5. Back end operations of research reactors.

Research reactors history sometimes revealed that the attention, and therefore the means, were focused on the experimental programmes proper progress, at a given moment.

However, the definition of such a programme should imperatively integrate the evaluation and management of the overall induced effects : effluents minimisation, waste management, control of all nuclear materials, future of spent fuel, waste treatment, dismantling and decommissioning...

It would be worrisome to put off the management and financing of the one of the above difficult problems for later.

*

* *

CONCLUSION

Through this rapid review of the most important safety aspects of research reactors, we can conclude that safe operations of these facilities require special attention, under a solid quality context. These reactors are generally operated by well trained teams, very conscious of the special safety characteristics posed by these reactors.

But, research reactors are by their very nature innovative facilities, upon which experimental results are difficult to obtain and interpret. They are also evolving facilities, subject to frequent change. Consequently, their safe operating conditions and procedures of use must be constantly re-examined and modified.

To help us better improve our current and future operating procedures, a more careful comparison with operating and safety procedures employed elsewhere in the world would be precious.

CH0100335

PRACTICAL LIMITATIONS FOR THE RELEASE OF FISSION PRODUCTS DURING THE OPERATION OF A RESEARCH REACTOR A CASE STUDY OF BR2

F. JOPPEN

Health Physics and Safety Department
SCK•CEN, Boeretang 200, 2400 Mol - Belgium

ABSTRACT

Failure of the cladding of a fuel element is an event occurring from time to time while operating a research reactor. As a consequence, fission products are released in the primary circuit of the reactor. This contamination means no direct hazard for the workers or for the environment in case the reactor has a closed primary circuit. The operator can decide to continue the irradiation to finish a scientific experiment or a commercial isotope production program. However, the operator can not prolong the cycle regardless the concentration fission products in the primary loop. Beside the limitations imposed by the regulatory authorities, ALARA considerations should be taken into account. An untimely stop of the reactor can have serious financial consequences and prolonged operation causes higher radiation doses. This paper gives an overview of decision process applied in case of detection of fission products in the primary circuit of BR2.

1. Introduction

The BR2 is a high flux engineering test reactor. The core is composed of hexagonal beryllium blocks with central channels. The standard BR2 fuel elements consist of several concentric tubular shells of UAl_x cladded with aluminium. The reactor is cooled by light water flowing downwards in the beryllium blocks. A pressure of 12 bar and a constant pressure drop across the core matrix are maintained for correct cooling of the fuel elements.

Failure of the cladding of a fuel element is an event occurring from time to time during operation. Possible causes are corrosion, mechanical damage or local overheating. As a consequence, fission products are released in the primary circuit of the reactor. The contamination of the primary water means no direct hazard for the workers or for the environment in case the reactor has a closed primary circuit such as BR2. The operator can decide to continue the irradiation to finish a scientific experiment or a commercial isotope production program. However, the operator can not prolong the cycle regardless the concentration fission products in the primary loop. First of all, limitations will be imposed by the regulatory authorities. Other considerations have also to be taken into account.

This paper discusses besides the regulatory limits also a reasoning about the operational limits on fission products concentrations which are used at BR2.

2. Measurement of fission products during reactor operation

During reactor operation, samples of the primary water are taken on a regular bases (every two or three days). These samples are analyses by gamma spectrometry. The sampling frequency will be increased in case of detection of fission products. The following isotopes are measured :

a. Gaseous fission products

The measured gaseous fission products are the xenon isotopes ^{133}Xe and ^{135}Xe and the krypton isotopes ^{85m}Kr, ^{87}Kr and ^{88}Kr. Non of these isotopes are direct fission products. Krypton is a decay product of bromine. However, the half live of the preceding bromine isotopes is smaller than a few

minutes and can be neglected. The xenon isotopes are formed by decay of antimony and/or tellurium and subsequent decay of iodine. The half lives of antimony and tellurium can be neglected, but the half lives of the iodine isotopes are significant.

b. Iodine isotopes

The concentration of the isotopes ^{131}I, ^{132}I, ^{133}I, ^{134}I and ^{135}I are measured. The iodine isotopes are neither direct fission products. They are formed by the decay of antimony and tellurium. The decay constant of tellurium is determining the rate of formation of the iodine isotopes. In some cases tellurium has decays in two different ways. The half life of the precursor is in this cases calculated using the weighted average of the decay constant for each decay mode.

c. Other isotopes

The concentration of the isotope ^{41}Ar is also measured in routine operation. Argon is not a fission product, but comes from air dissolved in the primary water. In this way, the argon concentration is rather an indication of the efficiency of the evacuation of air out of the primary circuit. The concentration decreases slightly in most cases. The isotope is not further considered.

3. Maximum allowed contamination of primary water.

The maximum allowable contamination of the primary water was before the initial operation of the reactor derived from the criterion that the loss of a great quantity of primary water should not lead to an important contamination of the environment [1]. ^{131}I was calculated to be the most limiting isotope, due to its rather long half-live and the high dose equivalents it causes especially for the thyroid. The operational limit on ^{131}I was set to be 370 Bq/ml [2].

The maximum allowable concentration of fission products in the primary water was recently reviewed, starting with the same basic criterion [3]. The calculation of the radiological consequences of the loss of a major quantity of primary water was made using the model developed for emergency plan use in the region of Mol [4]. This model calculates the concentration of isotopes in the environment using a gaussian distribution model, starting with a given source term. Different weather conditions can be taken into account. External radiation doses, inhalation doses and deposition are assessed from these concentrations.

The source term for the review calculations is deduced from the assumption that half the inventory of primary water (75 m^3) is lost outside the containment building in the machine hall. A fraction of the fission products will be released to the environment by this way. It is assumed that all the noble gases (krypton and xenon) and 0.75% of the iodine present in the primary water are released. Most considered isotopes are short-living and reach equilibrium concentration within a few days after the start of the irradiation. An important exception is ^{131}I. The reference for the calculation is a ^{131}I concentration of 400 Bq/ml at the end of the cycle. ^{135}Xe is the only isotope for which burn-up is taken into account, with an absorption cross section of $2\ 10^6$ barn. The presence in the primary water of ^{41}Ar (300 Bq/ml) and of ^{3}H (2000 Bq/ml) is also considered for dose estimation.

Calculation of the release for various weather scenarios gives the following conclusions. These results are obtained at a distance of 200 m from the installation. This is the minimal distance for which the model is valid.

- The total effective integrated radiation for someone standing in the cloud is neglectable. This dose comes from direct irradiation of the noble gases. The maximum calculated value is 30 nSv.
- The dose for the thyroid, caused by iodine, is in the worst case 60 nSv, which is also neglectable.
- The surface contamination with iodine is lower than 4000 Bq/m^2. Only in the most unfavourable condition (very stable atmosphere during night with rain), the calculated value for the deposition of iodine is 6000 Bq/cm^2.

From this calculations, it can be concluded that the maximum allowable contamination of the primary water is determined by ^{131}I and that a concentration of 400 Bq/ml can be accepted. However, since

measurements are made off-line, a warning level of 300 Bq/ml is introduced. If the warning level is reached, the operator has to schedule the shut-down of the reactor as soon as possible.

4. Leak in the primary heat exchangers.

The secondary loop of BR2 is open to the environment. The previous considerations on the maximum allowable contamination of the primary loop are not longer valid in case of detection of a leak in the primary heat exchangers since contamination of the secondary circuit must be avoided.

A leak in the primary heat exchanger can be detected by different methods. By making a balance between the water supplied to the primary loop and the drained water with a correction for the known leakages it is possible to make an estimation of the leak. Measuring the activity of the secondary water and comparing with the activity of the primary water makes it also possible to calculate the leak. The short living isotopes ^{16}N and ^{24}Na are good indicators.

Taking into account that the maximum concentration of ^{131}I in the secondary circuit is 20 kBq/m³ (limit for ingestion by members of the public), it is possible to calculate a maximum allowed leak using the simple formula, where removal of iodine by evaporation in the cooling towers is neglected:

$$Q_l < \frac{A_{s,6}}{A_6} \cdot Q_s \qquad (1)$$

This formula is presented in figure 1. The leak is limited to 0.1 m³/hr, as an operational limit.

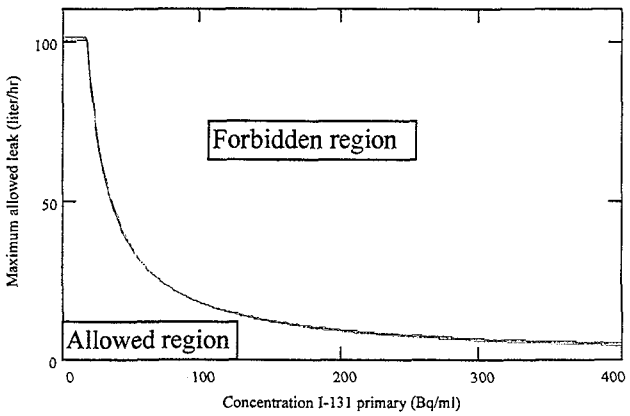

Figure 1: Maximum allowed leak in heat exchangers (liters/hr)

5. Contamination of the primary circuit

Contamination of the primary circuit occurs in case uranium is present on the surface of the fuel plates. Fission products are directly released into the primary water. The other way in which the primary water could be contaminated is by a defect in the cladding of a fuel plate. The behaviour of both sources is different and it is possible to distinguish between them.

Following simplifying assumptions are made:

- The reactor is considered as homogenous and with infinite dimensions, such that no spatial dependence is to be considered. This assumption is acceptable since only global results are sought.
- The fission products are immediately diluted in the primary water and their concentration is the same in the whole primary circuit on every moment.
- Neutron absorption by fission products present in the primary water is neglected. This is a good assumption since the quantity of water present in the core is very small compared to the total volume of the primary loop.
- The effect of precursors is not included in this calculations. This can easily be done, but it is only of importance if ^{131}I or ^{135}Xe are included in the analysis.
- The concentration of isotopes before starting the irradiations is neglectable. This can easily be done, but makes the calculations rather tedious and it is only necessary for ^{131}I in case of a start short after a contaminated cycle.

a. External contamination of fuel elements

The maximal external contamination of the fuel elements is 10 μg ^{235}U per plate, according to the technical specifications. This corresponds with a maximum of 180 μg ^{235}U per fuel element. A typical load of the core consists of 35 elements. Taking into account that the mean burn-up of the elements in

the core is about 20 % leads to a total of about 5 mg ^{235}U that could be present on the surfaces of the fuel elements in the reactor.

The contamination of the primary water caused by the presence of uranium on the surface of the fuel plates can be estimated by solving the following equation:

$$\frac{dC_{p,i}}{dt} = y_i \cdot \frac{m_u \cdot N_a}{M_u} \cdot \frac{\sigma_f \cdot \Phi}{V} - \lambda_{p,i} \cdot C_{p,i}(t) - \frac{\eta_{p,i} \cdot Q_{p,i}}{V} \cdot C_{p,i}(t) \qquad (2)$$

Agreement between the measured and predicted activities indicates that the contamination is caused by surface contamination. A ^{131}I contamination of a few Bq/ml is found in normal conditions.

b. Contamination from leakages in fuel elements.

The predictions of concentrations of fission products in case of a defect in a fuel plate is analogous to the case of surface contamination. It is assumed that during the irradiation fission products are formed in the fuel plate. If, after a certain time, a defect in the cladding occurs, these fission products will be dissolved in the primary water. In case the irradiation is continued, the uranium which is located under the defect continues to produce fission products which will directly enter into the primary water. Due to the fact that build-up in the fuel during irradiation must be taken into account and that there is no removal due to purification, the ratios between the concentration of krypton, iodine and xenon will be different from those which occur in case of surface contamination. In this way it is possible to make a distinction between surface contamination and a leaking fuel element.

Concentrations can be calculated from the following equations:

$$\frac{dC_{f,i}}{dt} = y_i \cdot \frac{(1-\beta) m_{el} \cdot N_a}{M_u} \cdot \sigma_f \cdot \Phi - \lambda_i \cdot C_{f,i}(t) - \sigma_i \cdot \Phi \cdot C_{f,i}(t) \qquad (3)$$

$$\frac{dC_{p,i}}{dt} = \frac{y_i}{V} \cdot \frac{(1-\beta) m_{el} \cdot N_a}{M_u} \cdot S(t) + \frac{C_{f,i}(t)}{V} \cdot \frac{dS(t)}{dt} - \lambda_i \cdot C_{p,i}(t) - \frac{Q_{p,i}}{V} \cdot C_{p,i}(t) \qquad (4)$$

S(t) is the damaged surface, which can occur at a certain moment and could grow under further irradiation. The equations can also be used to predict the damaged surface and its evolution under irradiation. An example of the result of such a calculation, based on the measured values of the ^{88}Kr concentration in cycle 1/97, is given in figure 2. This calculation indicates that a few square centimetre must be damaged in order to explain the observed concentration of ^{88}Kr. However, it is not possible to say something about the cause of the damage, or about its form (one big hole, or a lot of small pittings).

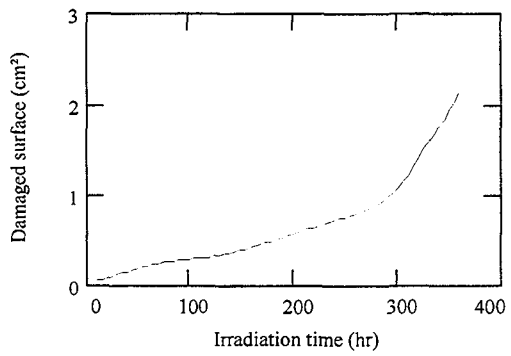

Figure 2: Predicted damaged surface

c. On-line measurement of fission products

During operation of the reactor on-line measurement of fission products is available. A flow of 0.2 l/min is taken from the primary circuit and filtered by resins. The most important monitored isotope is ^{88}Kr. Due to its short half live, the measurement is a good indication for the immediate release of fission products. The reactor will be stopped by fast insertion of the control rods in case of coincidence of two high-high alarms on the two ^{88}Kr monitors. The maximum allowed level of the high-high alarms is 500 cps. Operation above this level could lead to concentrations of ^{131}I above the regulatory limits.

The concentration of iodine in the primary water is also on-line monitored. The isotopes ^{134}I and ^{135}I are measured instead of the limiting isotope ^{131}I, because of the long half live of ^{131}I. A capsule with anion resins is used for the measurement, which causes an accumulation of iodine on the resins and the measured values are not directly proportional to the release. For this reason, no actions are connected with the on-line measurement of iodine.

6. The decision process

The basis to decide further operation with defect fuel elements are the ^{88}Kr on-line monitoring and the routine samples of primary water taken three times a week. In case of detection of abnormal concentration of fission products, it should be checked if the primary heat exchangers are not leaking. If the condititition of equation (1) is fulfilled the reactor is allowed to operate until the concentration of ^{131}I in the primary water reaches 400 Bq/ml, or until the indication on the ^{88}Kr on-line monitors reaches 500 cps. The sampling frequency of the primary water will be increased.

The further operation is however subjected to the restriction that radiation must be as low as reasonable achievable. This leads to the following rules:

- If the experiments can be interrupted without losses, the reactor should be stopped as soon as possible.
- If during the following shut-down important works on the primary circuit are scheduled, the higher radiation doses during the work caused by contamination of the circuit must be compared with the cost for the experiment if the reactor is stopped.
- If the concentration of ^{131}I reaches 300 Bq/ml, a stop of the reactor should be scheduled as soon as possible.

7. Conclusions

Operational limits have been defined for the contamination of the primary circuit. They allow a conditional operation of the reactor with leaking elements. In this way, irradiation of experiments can be continued as long as possible and the operational losses of leaking fuel elements are minimised.

8. List of symbols

A_i	Concentration of activity of isotope i in the primary loop ($Bq.m^{-3}$)
$A_{s,i}$	Concentration of activity of isotope i in the secundary loop ($Bq.m^{-3}$)
$C_{p,i}$	Concentration of isotope i in the primary water (m^{-3})
$C_{f,i}$	Concentration of isotope i in fuel per unit surface (m^{-2})
m_u	Mass of uranium present on the surface of the fuel elements (kg)
m_{el}	Mass of uranium present in the fuel element per unit surface ($kg.m^{-2}$)
M_u	Molecular weight of uranium (mol/kg)
N_a	$= 0.602\ 10^{24}$ atoms/mol : Avogadro's number
Q_i	Purification flow of isotope i
Q_l	Leak heat exchangers from primary to secondary (m^3/hr)
Q_s	Secondary purification flow (m^3/hr)
t	Time (sec)
V	Volume of the primary circuit (m^3)
β	Mean burn-up of the fuel (%)
η_i	Efficiency of the purification for isotope i
λ_i	Decay constant of isotope i (sec^{-1})
$\sigma_{a,i}$	Thermal absorption cross section of isotope i (m^2)
σ_f	Fission cross section of uranium (m^2)
Φ	Mean thermal neutron flux in the core ($m^{-2}.sec^{-1}$)

9. References

[1] G. Penelle, Internal SCK•CEN document, BR2 - GP/rm - ETR/N62.417, October 31, 1962.
[2] P. Govaerts, Internal SCK•CEN document, GF/PGo/mv/75-649, April 15, 1975.
[3] F. Joppen, Internal SCK•CEN document, to be published.
[4] J. Ruts, A. Sohier, Noodplan Kempen - handboek, SCK•CEN, 1995.

CH0100336

REFUELLING STRATEGY AT THE BUDAPEST RESEARCH REACTOR

TIBOR HARGITAI
KFKI Atomic Energy Research Institute
H-1525 Budapest 114 POB 49, Hungary

ABSTRACT

Refuelling strategy is very important for nuclear power plants and for highly utilised research reactors with power level in the megawatt range. New core design shall fulfil several demands and needs which can contradict each other sometimes. The loaded uranium quantity should assure the scheduled operation time (energy generation) and the manoeuvring capability even at the end of the campaign. On the other hand the built in excess reactivity cannot be too high, because otherwise it would jeopardize the shut-down margin and reactor safety. Moreover the core arrangement should be optimum for in-core irradiation purposes and for the beam port experiments too. Sometimes this demand can be in contradiction with the burn-up level wished to be achieved. The achieved burn-up level is very important from the fresh fuel consumption point of view, that has direct economic significance, however the generated spent fuel quantity is an important issue too. The refuelling technic, presented here allowed us at the Budapest Research Reactor to reach average burn-up levels superseding 60%.

Introduction

The Budapest Research Reactor is of the VVR-SM type, i.e. a light water cooled and moderated tank type reactor. The reactor was first commissioned in 1959, its principal functions at that time were to serve as a facility for basic research experiments in the frameworks of research programmes of the Academy of Sciences and in industrial development projects. The reactor was first upgraded in 1967, a new type of fuel was introduced and beryllium reflector was applied, that allowed to increase the reactor power from 2 MW to 5 MW. After 27 years of operation a full scale reconstruction and upgrading project was started. The reconstructed reactor was recommissioned in 1992-1993. The operating licence was issued in November 1993 and from this time the reactor is operated by given timetable with approximately 3000 hours operation time annually.

The reactor tank is made of a special aluminium alloy, its diameter is 2300 mm, with the height of 5685 mm. The thermal power of the reconstructed reactor is 10 MW, while the cooling capacity of the reactor was designed and constructed for 20 MW. This reserve in the cooling capacity serves redundancy today but can be used for future upgrading too. The reactor has 10 horizontal beam ports (8 radial and two tangential) and a pneumatic rabbit system for activation analysis purposes and about 40 vertical positions and six flux-traps are available for isotope production.

Fuel description

There are two types of fuel: VVR-SM and VVR-M2, both are designed and manufactured in Russia, the enrichment is 36% and the cladding is aluminium. The difference between them is in the composition of the fuel meat and the mass of ^{235}U. The VVR-SM type fuel meat is uranium-aluminium alloy with average ^{235}U content 38.9 g, while the fuel meat in the M2 case is uranium-dioxide dispersed in aluminium matrix and the average ^{235}U content is 45 g.

There are two types of fuel assemblies single and triple. The triple fuel assembly consists of three singles, built together. The allowed burn-up is 70%, the fuel can be kept in the core for five years. These restrictions were decided by the Hungarian Safety Inspectorate. In the following context the fuel amount is counted in singles in all cases. A triple fuel assembly can be seen in **Fig 1.**

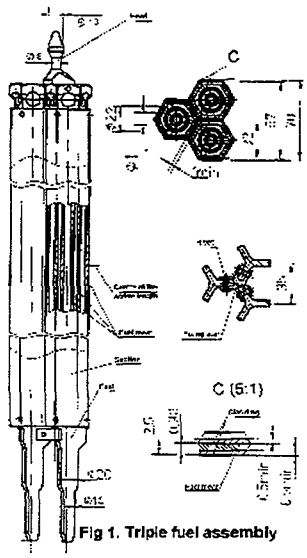

Fig 1. Triple fuel assembly

The reactor core

The base of the reactor core is a hexagonal grid plate with 397 identically formed holes. The fuel elements and the beryllium displacers can be put into these holes, the guide tubes of the 18 absorber rods as well. The equilibrium size of the core consists of 229 fuel assemblies, the remaining core positions are occupied by the control rods, beryllium displacers and isotope production channels. The core is surrounded by a fixed beryllium reflector of 20 cm average thickness. The two rows of displacers are used for saving the fixed reflector against burn-up. The cooling water is flowing upstream across the core. The inlet temperature is kept on 50 °C while the temperature increase is around 5 °C with flow rate of 1670 m^3/h.

Approaching to the equilibrium core size

Finishing the reconstruction project the reactor was critical again on December 12, 1992. The critical load was 83 fuel assemblies, which was increased to 132 in the following days. The starting core can be seen in **Fig 2**. The total mass of ^{235}U was 5252.4 g, with 21.61 $ excess reactivity; the core was surrounded by four rows of beryllium displacers. This core was operated during the commissioning programme and after getting the licence for continuous operation on November 25, 1993. The first refuelling started on April 15, 1994, when the average burn-up of the core was 25.26%, the remaining mass of ^{235}U was 3925.9 g, and the excess reactivity of the warm Xe poisoned core was 1.0 $. The data of this and the following cores, including groups of the inserted fuel assemblies are summarized in Table 1.

The second load consisted of 37 fresh fuel assemblies with 1493.1 g of total ^{235}U content. These assemblies were inserted into the middle of the core, the "old" fuel assemblies were moved towards the periphery, and the number of beryllium displacers was decreased. It means that the core size was increased to 169 fuel assemblies, the built-in excess reactivity was 14.2 $. This core was designed for a short period (two months) of operation and the planned energy generation was only 340 MWd. Because of the summer maintenance (do not forget that it was a new reactor) the operation was stopped on July 1, 1994, when the remaining excess reactivity was 6.9 $ in warm poisoned state, which would be enough for 40 days of operation at nominal power.

Fuel cycle/ generated energy [MWd]	Group	Fuel N°	^{235}U [g]	Total mass [g] / core burn-up[%]	Average burn-up [%]	Maximum burn-up [%]	Excess reactivity [$]	Shut-down margin [$]
1. (132)/942.3	I.	132	5252.4	5252.4 / 0	0	0	21.6	4.27
2. (169) / 342.8	I.	132	3925.87	5419.97 / 19.7	25.25	31	14.2	6.53
	II.	37	1493.1		0	0		
3. (210) / 680.9	I.	132	3582.98	6586.48 / 21.4	31.8	37	20.7	4.7
	II.	37	1366.4		8.5	11		
	III.	41	1637.1		0	0		
4. (228) / 457.6	I.	132	3080.37	6382.67 / 29.8	41.3	48	14.7	6.83
	II.	37	1164.38		21.9	27		
	III.	41	1425.52		12.9	15		
	IV.	18	712.4		0	0		

Table 1. Fuel data of the first four cycles

In the third cycle the core size was increased to 210 fuel assemblies so 41 fresh fuel assemblies were inserted into the centre of the core again, decreasing the number of the beryllium displacers. The fuel assemblies of the previous group were placed symmetrically near to the used horizontal beam ports in order to raise the available neutron flux for the users. The cycle was designed for 675 MWd thermal power generation, the built in excess reactivity was 20.7 $. The cycle was finished in almost the same way as the previous one, i.e. the remaining excess reactivity was around 5.1 $ in warm poisoned state.

In the fourth cycle the equilibrium core size (228) was reached, loading 18 fuel assemblies into the core, leaving only two rows of beryllium displacers around the core. The fresh fuel assemblies were inserted into the periphery of the core, as the average burn-up of the previous group was very low. This time we realized that there was a certain difference between the burn-up level of the three parts of a triple fuel assembly, so the inserted triple fuel assemblies were marked in order to allow to rotate them. I.e. in the following cycle not only the position of the triple assemblies is the core was recorded, but the orientation of the assembly (position of the marked part) too.

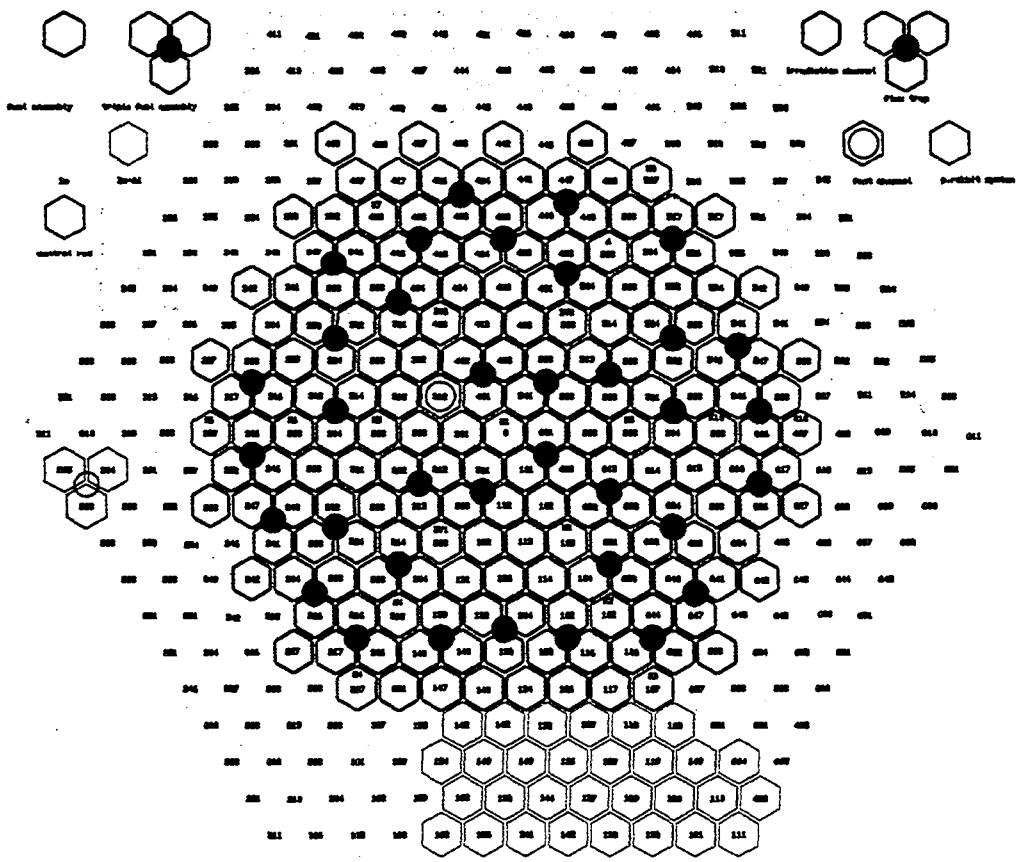

Fig 2. Map of the starting core

Fuel cycle design

In the first period the fuel cycles were based on the addition of assemblies (see above), but reaching the equilibrium core size the philosophy of the fuel cycle design changed somewhat, as the burnt fuel assemblies have to be replaced by fresh ones. To save fuel and money only those fuel assemblies were planned to remove which reached the 70 % burn-up limit, so the number of the fresh fuel assemblies, that have to be put into the core is determined by the burn-up level. Naturally there is a reactivity limit too, namely the shut-down margin of the core should be 2.5 $, when the three safety rods are in fully withdrawn positions. These limitations give the size of the group, while the positions of the fresh fuel assemblies are determined by the flux demand in the irradiation channels and at the beam ports. The positions of the "old" fuel assemblies remaining in the core are fixed by the flux demand and by their burn-up level. The goal of the rearrangement is to reach the highest flux and to have a well balanced burn-up distribution, i.e. the maximum burn-up should be near to the average.

Fuel cycle / generated energy [MWd]	Group	Fuel N°	^{235}U [g]	Total mass [g] / core burn-up[%]	Average burn-up [%]	Maximum burn-up [%]	Excess reactivity [$]	Shut-down margin [$]
5. (228) / 680	I.	87 (-45)*	1868.75	6663.18 / 26.9	46.1	48	16.2	6.47
	II.	37	1044.15		30	36		
	III.	41	1293.38		21	24		
	IV.	18	655.0		8.1	10.0		
	V.	45	1801.9		0	0		
6. (192) / 744.1	II.	37	883.94	6201.1 /19.48	40.8	48	19.83	5.6
	III.	41	1118.94		31.7	35		
	IV.	18	573.82		19.5	25		
	V.	45	1567.3		13	17		
	VI.	51	2057.1		0	0		
7. (229) / 876.8	II.	36 (-1)*	732.63	6885.0 /26.7	50.70	57	17.2	3.08
	III.	41	942.4		42.5	44		
	IV.	18	482.8		32.3	34.3		
	V.	45	1296.0		28.1	33		
	VI.	51	1730.4		15.9	21		
	VII.	38	1700.8		0	0		
8. (229) /1006.1	III.	31 (-10)*	606.9	6989.9 / 26.9	51.2	53	15.4	3.57
	IV.	18	404.5		43.2	47		
	V.	45	1072.9		40.4	48		
	VI.	51	1398.9		32.0	39		
	VII.	38	1466.3		13.9	16		
	VIII.	46	2040.4		0	0		
9. (229) / 680.7	IV.	18	320.63	6569.02 / 31.3	54.9	58	11.76	6.68
	V.	44 (-1)*	839.45		52.3	52		
	VI.	51	1171.24		46.2	56		
	VII.	38	1235.8		27.3	33		
	VIII.	46	1747.5		14.4	21		
	IX.	32	1254.4		0	0		
10. (229) / 925	V.	20 (-24)*	340.9	6944.2 / 28.7	57.6	60	16.25	3.12
	VI.	47 (4)*	923.0		54.2	60		
	VII.	38	1089.4		35.9	43		
	VIII.	46	1550.5		24	34		
	IX.	32	1121.0		10.6	14		
	X.	46	1919.4		0	0		

* Number of fuel assemblies, replaced by fresh ones.

Table 2. Data of the following cycles

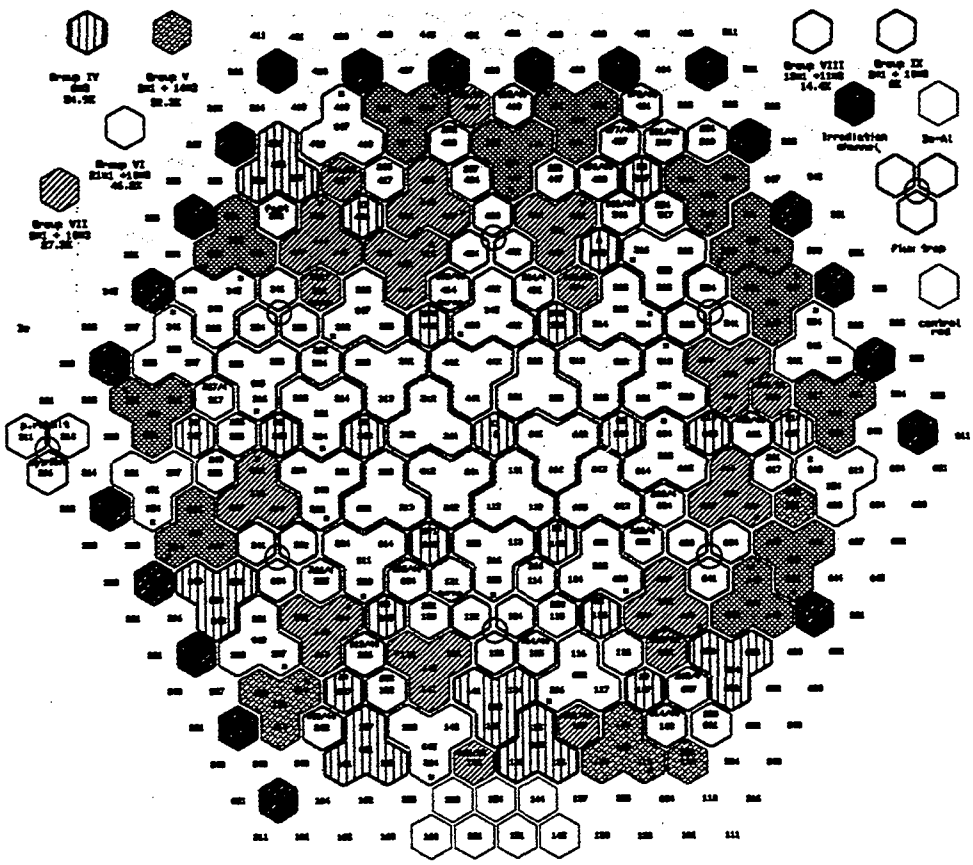

Fig 3. Map of the 9th fuel cycle (July 1996)

In the next cycle 45 fuel assemblies were replaced by fresh ones, the excess reactivity was 16.2 $, while the 6.47 $ shut-down margin was much higher than the demand. The fresh fuel assemblies were put into positions near to the periphery, the others were rearranged. The data of this and the following cores, including the groups of the inserted fuel assemblies are summarized in Table 2.

In the sixth cycle a problem arose as the Nuclear Safety Inspectorate prescribed the maximum burn-up level of 50 % as a limit. This level was increased later to the mentioned 70 %, based on the recommendations of the fuel manufacturer, but it happened only later. The result of this restriction was that 87 fuel assemblies had to be removed from the core and only 51 fresh fuel assemblies could be inserted, because of the shut-down margin limitation, so the core size decreased to 192 assemblies. The average burn-up level of the removed fuel assemblies was only 41 %.

The equilibrium core size was reached again in the next cycle, when only one instrumented fuel assembly was removed and 38 fresh ones were inserted into the centre of the core. This time the future refuelling concept was decided as well. According to this decision in two subsequent fuel cycles the fresh fuel will be inserted into the periphery of the core, and in the third cycle to the centre of the core. The concept will be followed systematically. The seventh and the subsequent cycles were designed according to this decision. The core map of the 9th cycle can be seen in **Fig 3**.

The core design is always made by the Reactor Department, the planned new core arrangement is handed over to the Reactor Analysis Department, where the necessary calculations are performed to verify the planned core arrangement. The calculations determine the length of the fuel cycle (generated power), the worth of the control rods, the neutron flux and the burn-up distribution. The flux and the burn-up distributions are calculated for every core position. If the calculated parameters verify that the core can be operated safely the plans are reviewed and approved by the regulatory body. The refuelling is naturally based on this approval.

Refuelling

The fresh fuel assemblies, selected for refuelling undergo a careful check before the refuelling can be started. The geometry and the fuel is checked to avoid sticking in the core and the surface is inspected for cladding failures. In the last phase the fuel is washed carefully by alcohol.

The refuelling is made by a written step by step procedure. In this procedure care is taken to avoid the formation of big holes during the core is rearranged. If it is possible the maximum hole should not be bigger than a triple fuel assembly. As the core rearrangement lasts for three or four working days, care should be also taken, that every day has to be finished by the measurement of the excess reactivity, and this measurement should be performed on a full core without holes. When the fresh fuel assemblies are inserted into the core, the excess reactivity has to be measured regularly. If the reactivity measurements show some alteration from the calculated value, the refuelling should be stopped and the reason should be investigated and it has to be reported to the regulatory body.

During refuelling all the safety instrumentation has to be in operating condition and the safety rods are withdrawn, to ensure the tool for criticality control.

Refuelling measurements

While the refuelling is made excess reactivity measurements are performed to indicate that the operator is on the safe side. These measurements can only be used for indication as the new worths of the control rods are not known yet that time. Finishing the refuelling job the worths and the characteristics of the control rods shall be measured. From the measurements the shut-down margin, the excess reactivity and the speed of the reactivity insertion shall be determined, as there are regulatory limitations for these data. The moving speed of the control rods can be adjusted if the measurements show that the limit is overridden. If the shut-down margin limit would be overridden it would cause a lot of trouble but it is almost impossible because the calculations before refuelling and the excess reactivity measurements during refuelling would indicate the problem in time.

When all the reactivity data are satisfactory neutron flux measurements are performed. First the relative neutron flux is measured at small reactor power by means of gold foils in about 200 core positions. In order to determine the absolute flux values the reactor power should be increased to the power range and the power should be measured based on the energy generation (heat balance). At this power level the gold foil flux measurement is repeated but only in few positions and from the second measurement the flux values are calculated.

Summary

The described refuelling strategy is time consuming as almost all the fuel assemblies are moved. Marking the triple fuel assemblies makes possible to rotate them to get the average and maximum burn-up levels very close to each other. As it can be seen from the tables the average and maximum burn-ups are approaching closer to each other while the burn-up is progressing. It means that the burn-up of the spent fuel is almost uniform in all the fuel assemblies, what is a very important economic issue. The tables show also that the built in excess reactivity is quite high in our case. This is a disadvantage of course, but to avoid this, we would need much shorter refuelling periods, about one month each. The refuelling is time consuming and even somewhat risky, so one can state that the disadvantage of the high built-in excess reactivity can be accepted.

Reference

I. Gladkih, L. Frankl, A. Keresztúri et.al. 'Fuel cycle reports of the Budapest research Reactor' Volume 1-10, 1992-1998.

CH0100337

EXPERIENCE IN OPERATION AND FUEL MANAGEMENT AT THE DALAT NUCLEAR RESEARCH REACTOR

DO QUANG BINH, TRAN HA ANH, NGO PHU KHANG, PHAM VAN LAM
Reactor Department
Nuclear Research Institute
01 Nguyen Tu Luc, Dalat, Vietnam

and

NGO QUANG HUY, NGUYEN PHUOC LAN
Centre for Nuclear Techniques
217 Nguyen Trai, Ho Chi Minh City, Vietnam

ABSTRACT

The Dalat nuclear research reactor was reconstructed from the former TRIGA MARK II reactor in the period 1982-1984 and put into operation at the nominal power in March 1984. Since then it has been safely operated for about 19000 hours and was loaded additional fuel in April 1994. A plan for the next reloading has been prepared as well.

This paper presents some experiences in reactor operation and in-core fuel management obtained from our reactor operation practice.

1. Introduction

The Dalat nuclear research reactor was originally a TRIGA MARK II reactor with a nominal power of 250 kW. It was reconstructed in the period 1982-1984 and upgraded to a 500 kW swimming-pool type research reactor loaded with the Soviet VVR-M2 fuel elements, moderated and cooled by water. The reactor was launched into its first criticality in the late 1983 and put into operation at the nominal power in March 1984. The Dalat reactor has been used mainly for personnel training, radioisotope production, neutron activation analysis and other researches.

The remaining components from the former reactor are an aluminium tank, a graphite reflector, four horizontal neutron beam ports, a thermal colunm and a biological protection wall. The new components consist of a reactor core, an additional beryllium reflector, an instrumentation and control system and accompanied technological facilities. The reactor core 600 mm high and 400 mm diameter is placed in the aluminium tank full of water. It has 121 positions for placing fuel elements, 7 control rods (2 safety rods, 4 shim rods and 1 regulating rod), one central neutron trap and vertical irradiation channels. A cross-section view of the reactor core is shown in Figure 1.

The fuel elements are made of uranium-aluminium alloy with aluminium cladding and 36 % U^{235} enrichment. On average, each fuel element contains about 40.2 g of U^{235} distributed on three coaxial annular tubes. The outermost tube has a hexagonal shape and the two inner tubes are round. Gaps between the tubes serve as the passages for water circulation. The fuel meat has a thickness of 0.7 mm and a length of 600 mm, the cladding has a thickness of 0.9 mm.

As comparing with the former TRIGA reactor, the Dalat reactor possesses the distinct neutronic characteristics as follows:

- The negative temperature coefficient of reactivity of the new core has a smaller absolute value than the one of the TRIGA reactor. This makes the incoherent safety of the new reactor lower than that of the former.
- The central neutron trap and the additional beryllium reflector increase the power peaking factor and cause the neutron flux distribution in the core more complicated.

- A large amount of beryllium in the core creates an internal neutron source at all time. This lets the reactor not need an extra source when start-up but makes the kinetic characteristics of the new reactor different from the ones of the former.

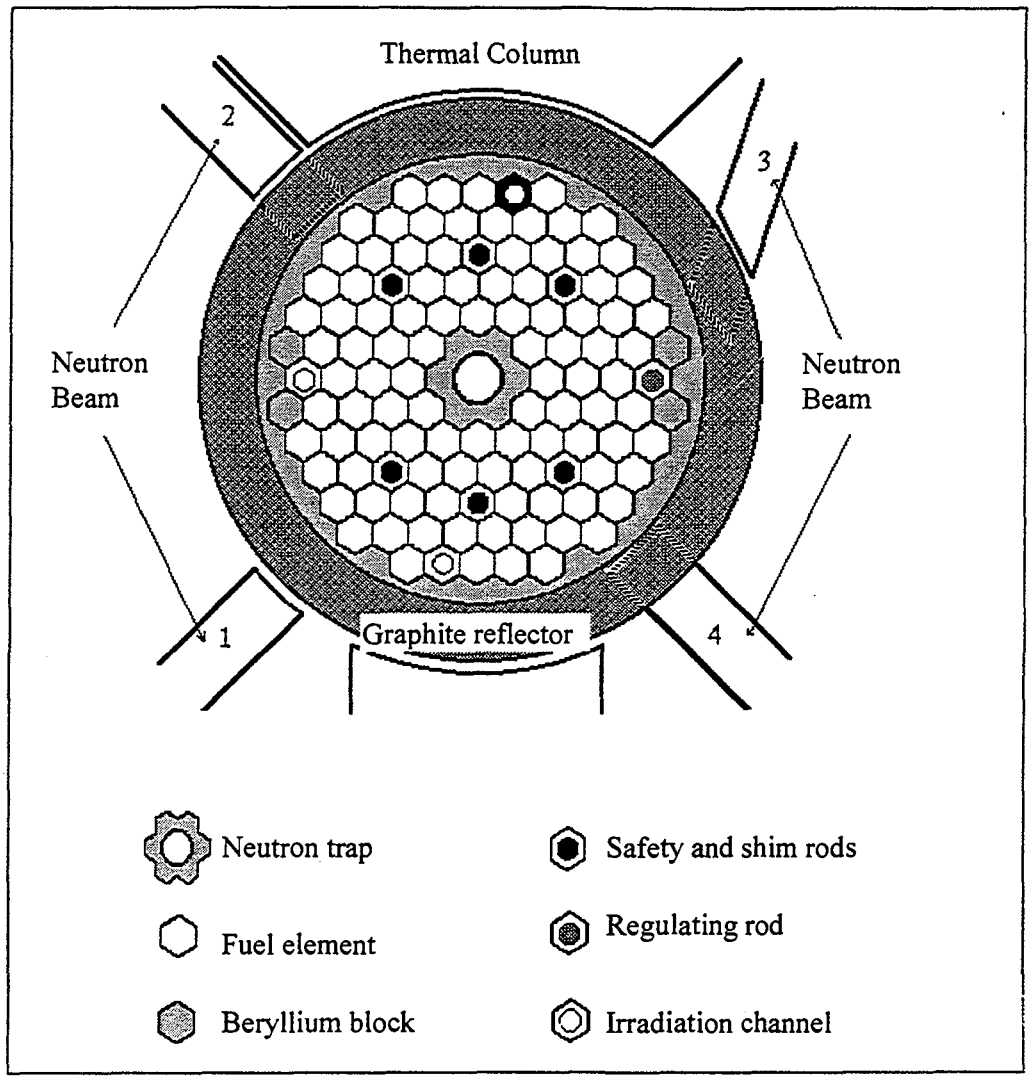

Fig 1. Cross-section view of the reactor core.

2. Experience in Operation

Since the inauguration in March 1984, the reactor has been safely operated for about 19000 hours. The main operational regime is 100 hour continuous runs at 500 kW serving for radioisotope production and activation analysis, once every 3 or 4 weeks; the remaining time is for maintenance and experiments. The total operation time is about 1350 hours a year. A summary of the reactor operation data is presented in Table 1. It follows from Table 1 that a significant number of reactor scrams were due to failures or incidents of electric network, and the number of scrams due to human error and technical failures decreases over operation year.

The reactor instrumentation and control system was renovated in the period 1992-1993 to ensure the reactor safety. This was implemented by our operation staff under the support of the IAEA. Since the late 1993, the reactor has been operated with the renovated system.

The main operational characteristics of the reactor resulting from reactor calculations and experiments are the following. The average thermal neutron flux is 3.5×10^{12} n/cm^2/sec, the maximum neutron flux at the central neutron trap is 2.1×10^{13} n/cm^2/sec, the temperature coefficient of reactivity is 1×10^{-4}/°C, the reactivity worth of equiblirium xenon poisoning is 1.35 % after 60 hours of continuous operation at the nominal power, the maximum excess reactivity at the beginning of

operation is 7.14 %, the prompt neutron life time is $5x10^{-5}$ sec, the effective delayed neutron fraction β_{eff} is 0.0081, the drop time of the control rods is less than 0.5 sec.

Table 1. Operation Data

Fiscal year	Operation Time (hour)	Output (MWxhr)	Scram		
			electric network failure	other reasons	total
1984	1120	342	11	17	28
1985	1771	866	5	8	13
1986	1387	645	6	4	10
1987	993	430	6	4	10
1988	1286	604	14	4	18
1989	1343	631	9	2	11
1990	1505	730	13	5	18
1991	1654	777	8	2	10
1992	1486	730	8	2	10
1993	966	480	1	2	3
1994	1302	643	11	1	12
1995	1351	670	9	2	11
1996	1370	674	7	3	10
1997	1200	600	9	1	10

Besides reactor physics characteristics, reactor water is also a major interest in operation. The purity of water is maintained by the use of a recirculating ion-exchange system and two mechanical filters. Regularly, we test the water quality every day in 100 hour continuous operations and twice a week in the remaining time.

Every 6 months, the operation staff takes an inspection of the reactor tank surface using an underwater telescope, cleans the reactor tank and collects articles at the bottom of the tank using an external pressure water pump. However, a lot parts of the tank surface can not be inspected because of the prevention of reactor facilities.

3. Activities on Fuel Management

The first critical core configuration with 69 fuel elements and all the control rods out of the core was reached in 1983. In the initial start-up period, several different loading configurations with 72, 74, 86, 88, 89, 94 fuel elements, shown in Table 2, were established, and finally, the Dalat reactor reached its working core configuration with 89 fuel elements in March 1984. This configuration was unchanged until the excess reactivity of the core decreased to a value little more than 3% in 1994.

Table 2. Initial critical core configurations

Number of fuel elements	Mass of U^{235} (g)	Position of control rods (mm)	Excess reactivity (%)
69	2775.11	SR1=SR2=SR3=0, SR4=6	
72	2898.77	SR1=SR2=SR3=0, SR4=195	0.24
74	2976.21	SR1=SR3=SR4=0, SR2=442	1.83
86	3458.83	4SR=363	6.04
88	3539.27	4SR=462	7.58
89	3548.88	4SR=410	7.14
92	3690.50	4SR=470	7.90

SR: Shim Rod

For the first fuel reloading, reactor calculation and experiment were performed to determine the most basic reactor parameters. A 2-dimension three-group diffusion computer code, running on PC-AT, was programmed basing on the nodal method in hexagonal lattice geometry to calculate the neutron flux distribution. Burn-up calculation is performed by solving the equations which describes the composition change of the most important materials in fuel elements as a function of time. The global neutronic and burn-up calculations are combined in a computer code named HEXA-BURNUP [1]. The code is verified by comparing its results with the experimental results such as the initial critical loading configurations, the radial neutron flux distribution, the relative fuel burn-up distribution and the positions of control rods during operation time.

Basing upon calculational results, several fuel reloading patterns were analyzed and the best reloading scheme was chosen for the first reloading. This scheme is to replace 11 beryllium blocks at the core periphery by 11 fresh fuel elements. After the first fuel reloading, the reactor core contains 100 fuel elements, and its excess reactivity increases an amount of 1.90 %. This configuration can be operated for about 4-5 years.

To prepare a future plan for the second reloading, fuel management and reactor operation, calculation and experiment researches have been done. The code HEXA-BURNUP has been developed to solve the problem of in-core fuel management optimization basing on the perturbation theory and binary shuffle technique. The code can search an optimal fuel loading pattern with the lowest power peaking factor for any available set of fuel elements [2]. To determine the number of fuel elements to be discharged at the end of cycle, which satisfies with operational constraints, several different reloading schemes with the different number of discharged fuel elements are investigated. The most principal experiments have been done for checking calculational results and evaluating the safety of the reactor.

Table 3 presents the experimental and calculational values of the maximum fuel surface temperature at some positions in the core at different power levels. Determination of the fuel surface temperature is carried out by replacing the fuel elements at measuring positions with a thermocouple instrumented fuel element, which consists of 9 thermocouples placed on the surface of the element in the axial direction.

Recently, we ourselves have been developed a method for measuring the radial distribution of fuel burn-up. The method allows the determination of fuel elements by counting the neutron density of the reactor at subcritical states directly through detectors of the instrumentation and control system [3]. The experimental and calculational results are presented in Table 4.

In Table 5 is shown the fuel reactivity worth distribution. The reactivity worth of a fuel element is measured from the difference in critical positions of control rods before and after the fuel element is withdrawn from the core.

Table 3. Maximum fuel surface temperature distribution

Reactor power (kW)	Inlet water temperature (^{0}C)	Maximum fuel surface temperature (^{0}C)		Deviation between calculation and experiment	
		Experiment	Calculation	^{0}C	%
Position 5-6					
250	19.2 ± 0.1	61.2 ± 0.4	66.5	5.3	8.7
400	19.7 ± 0.1	80.8 ± 0.2	85.1	4.3	5.3
500	20.7 ± 0.4	92.3 ± 0.6	96.3	4.0	4.3
Position 3-4					
250	19.7 ± 0.1	48.0 ± 0.2	51.4	3.4	7.1
400	20.3 ± 0.1	60.8 ± 0.4	63.6	2.8	4.6
500	21.4 ± 0.3	67.4 ± 0.3	71.4	4.0	5.9
Position 1-1					
250	21.1 ± 0.1	46.3 ± 0.9	49.0	2.7	5.8
400	21.6 ± 0.1	56.6 ± 0.3	60.5	3.9	6.9
500	22.7 ± 0.2	63.8 ± 0.3	67.4	3.6	5.6

Table 4. Relative distribution of fuel burn-up

Pos.	Relative Burn-up	
	Experiment	Calculation
5-6	1.28 ± 0.14	1.42
3-4	1.11 ± 0.13	1.03
4-1	0.72 ± 0.10	0.71
5-3	0.88 ± 0.11	0.78
7-3	0.93 ± 0.12	1.00
4-6	1.03 ± 0.15	1.15
4-4	1.10 ± 0.16	0.97
2-3	0.95 ± 0.14	0.93

Table 5. Reactivity distribution of fuel elements

Pos.	Reactivity (β_{eff})	
	Experiment	Calculation
4-5	0.38 ± 0.03	0.47
7-3	0.20 ± 0.03	0.24
7-2	0.28 ± 0.03	0.26
7-9	0.18 ± 0.03	0.23
7-4	0.50 ± 0.21	0.53
1-1	0.41 ± 0.21	0.36
5-6	0.76 ± 0.21	0.75
3-4	0.30 ± 0.21	0.38

In Tables 3, 4 and 5 , the positions of cells are denoted in the following labeling way. Each cell of the core is labeled by two numbers m-n; m indicates the row number calculated from up to down (see Fig. 1), n indicates the cell order in a row from left to right. For instance, the five cells in the first row are labeled as 1-1, 1-2, 1-3, 1-4, and 1-5, of which cell 1-4 is an irradiation channel.

It can be seen that the calculational and experimental results are in a good agreement except at some positions around the control rods. This gives confidence to the use of the calculation results to make a plan for fuel management and reactor utilization.

4. Conclusion

The Dalat reactor has been safely operated for more than one decade. To achieve that, maintaining and upgrading the reactor technological facilities have been done with a high quality. Besides, reactor researches have also provided the important bases for safety evaluation and in-core fuel management to ensure its safe operation and effective exploitation.

References

[1] P. L. Nguyen et al., Calculation of Fuel Burn-up and Fuel Reloading for the Dalat Nuclear Research Reactor, Proceedings of the Fourth National Conference on Physics, Hanoi, Vietnam, Oct. 5-8, 1993.

[2] Q. H. Ngo et al., Application of Perturbation Theory to Calculation of Refueling Optimization for the Dalat Nuclear Research Reactor, Proceedings of the First National Conference on Nuclear Physics and Techniques, Hanoi, Vietnam, May 14-15, 1996, pp. 57-60.

[3] Q. B. Do et al., A Method for Determining the Fuel Burn-up Distribution of Nuclear Research Reactors by Measurements at Subcritical States, Ann. Nucl. Energy, Vol 24, No. 15, pp. 1233-1240, 1997.

Session 4:

Back-end options and transportation

CH0100338

OVERVIEW OF SPENT FUEL MANAGEMENT AND PROBLEMS

I. G. RITCHIE
Nuclear Fuel Cycle and Materials Section
Division of Nuclear Fuel Cycle and Waste Technology
International Atomic Energy Agency
Wagramer Strasse 5, P. O. Box 100
A-1400 Vienna, Austria

P. C. ERNST
25 Bannisdale Way
Carlisle, Ontario, Canada
L0R 1H2

ABSTRACT

Results compiled in the research reactor spent fuel database are used to assess the status of research reactor spent fuel world-wide. Fuel assemblies, their types, enrichment, origin of enrichment and geological distribution among the industrialised and developed countries of the world are discussed. Fuel management practices in wet and dry storage facilities and the concerns of reactor operators about long-term storage of their spent fuel are presented and some of the activities carried out by the International Atomic Energy Agency to address the issues associated with research reactor spent fuel are outlined. Some projections of spent fuel inventories to the year 2006 are presented and discussed.

1. INTRODUCTION

Activities in the area of management and interim storage of spent nuclear fuel from research and test reactors are dominated at the present time by two important programmes. The first is the Reduced Enrichment for Research and Test Reactors (RERTR) programme, and the second is the take-back of spent research reactor fuel by the country where it was originally enriched. At the time of writing, there is only one take-back programme of spent research reactor fuel by a supplier country in operation, that of the United States of America. It is hoped that other supplier countries and partners in RERTR will follow suit and implement their own take-back programmes for foreign research reactor spent fuel.

The IAEA's activities on research reactor spent fuel have been formulated to address the problems and concerns of managers of research reactor spent fuel and to support the two programmes mentioned above. However, the first step was to obtain an overall picture of spent fuel management and storage world-wide. This has been attempted by the circulation to research reactor operators of questionnaires specifically designed to form the input to the Research Reactor Spent Fuel Database (RRSFDB). Construction and maintenance of this database is an ongoing activity and this report provides a snapshot at the time of writing of the salient information gleaned from RRSFDB supplemented by information from the more established Research Reactor Database (RRDB).

2. GENERAL OVERVIEW

Most of the information presented in this section is taken from the RRDB [1]. As of December 1997, there was information on 589 reactors stored in the RRDB. Of these, 269 were operational, 12 under construction, 6 planned, 303 shut-down and 1 for which the information was not completely verified.

The distribution of the number of countries with at least one research reactor vs. time peaked for developing countries in 1985 but remained almost constant for industrialised countries from 1965 to the present. The age distribution of operational research reactors in the RRDB peaks in the range of 30

to 40 years. In fact, 19% of the reactors are in the age range of 20 to 29 years and 51% in the range 30 to 39 years. A large fraction, 46%, of operational research reactors operate at a thermal power of 100 kW or less. Almost all of these 122 reactors have fuel for life and will not have spent fuel problems until they permanently shut down. Finally, while the number of research reactors in industrialised countries peaked in 1970, the number in developing countries appears to have peaked in about 1990.

Although the RRDB has a section on fuel, it dose not address the details of spent fuel storage and management. For this reason, a questionnaire on spent fuel management and storage was designed and circulated to research reactor operators for the first time in February 1993. The latest version was circulated to research reactor operators world-wide in April 1997.

3. SPENT FUEL MANAGEMENT AND STORAGE

At the time of writing, the RRSFDB contains 211 entries. Of these research reactors, 39 are permanently shut down, 14 are temporarily shut down for refurbishment, 3 are planning shut down, there is unverified information on the status of three and the remaining 152 are operational. Most research and test reactors with substantial turnover of fuel and, hence, significant inventories of spent fuel, are included in RRSFDB. It is essential for the IAEA to get an accurate picture of the problems faced by research reactor operators and their concerns about management, storage and ultimate disposal of spent fuel, in order to be able to address them and to begin a dialogue about possible regional solutions for countries with no nuclear power programme.

Accumulated Spent Fuel

Research reactor fuels come in a large variety of shapes and sizes and are usually shipped in assembly form. For these reasons, in RRSFDB spent fuel amounts are recorded in assemblies, where a fuel assembly is defined as "the smallest fuel unit that can be moved during normal reactor operation or storage". Many facilities report several types of spent fuel. In fact, there are currently entries on 407 fuels distributed among the 211 facilities in RRSFDB. Strictly speaking, fuels enriched to ≥ 20% ^{235}U are classified as HEU. Since many facilities with LEU cite a nominal enrichment of 20%, we have modified the definition of LEU to be ≤ 20% ^{235}U for the purposes of RRSFDB. Since any fuel with exactly 20% enrichment before irradiation will have <20% enrichment after significant burnup, this does not violate the accepted definition.

The distribution of fuel types among the reactors in the RRSFDB is shown in Table I. Although the majority are of MTR, TRIGA or standard Russian types, a significant percentage (28%) are classified as other types, which underlines the fact that many experimental and exotic fuels exist at research reactors around the world, posing problems for their continued storage, transportation and ultimate disposal.

Table I: Distribution of Reactors by Fuel Type

FUEL TYPE	REACTORS USING FUEL TYPE	
	NUMBER	PERCENTAGE
MTR	68	32
TRIGA	42	20
RUSSIAN	42	20
OTHER	59	28

The majority of spent fuel assemblies are stored in the industrialised countries. The origins of the enrichments of the RRSFDB spent fuel inventory is broken down into fuel of US, Russian, and *other* origin, where *other* includes China, France, UK, South Africa and natural uranium fuels. As expected, the US supplied all of the enriched fuel in North America and most of that in Asia-Pacific, while Russia (or the former Soviet Union) supplied most of the enriched fuel in Eastern Europe. The regional breakdown of US-origin and Russian-origin fuel, classified as HEU or LEU, is shown in

Figure 1. This involves totals of 7,776 HEU and 7,515 LEU assemblies of US-origin and 13,035 HEU and 16,854 LEU assemblies of Russian-origin. It is worth noting that a significant fraction of Russian-origin HEU was originally enriched to only 36%, while most US-origin HEU was originally enriched to ≥90%.

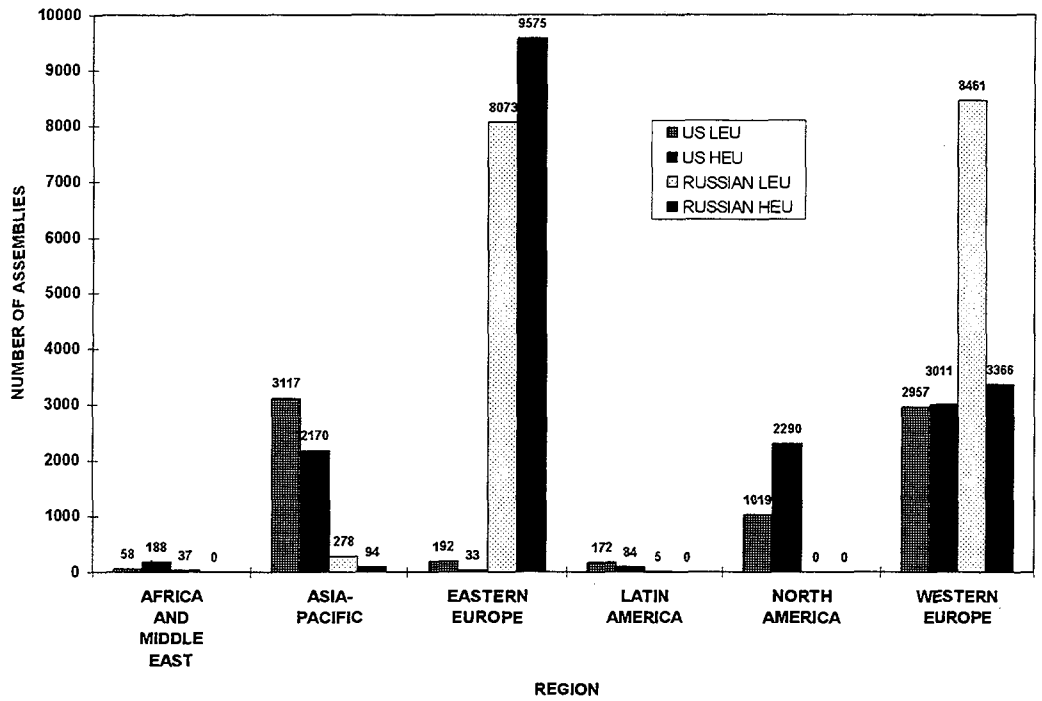

Figure 1: Geographical Distribution of US- and Russian-Origin Fuel by Enrichment.

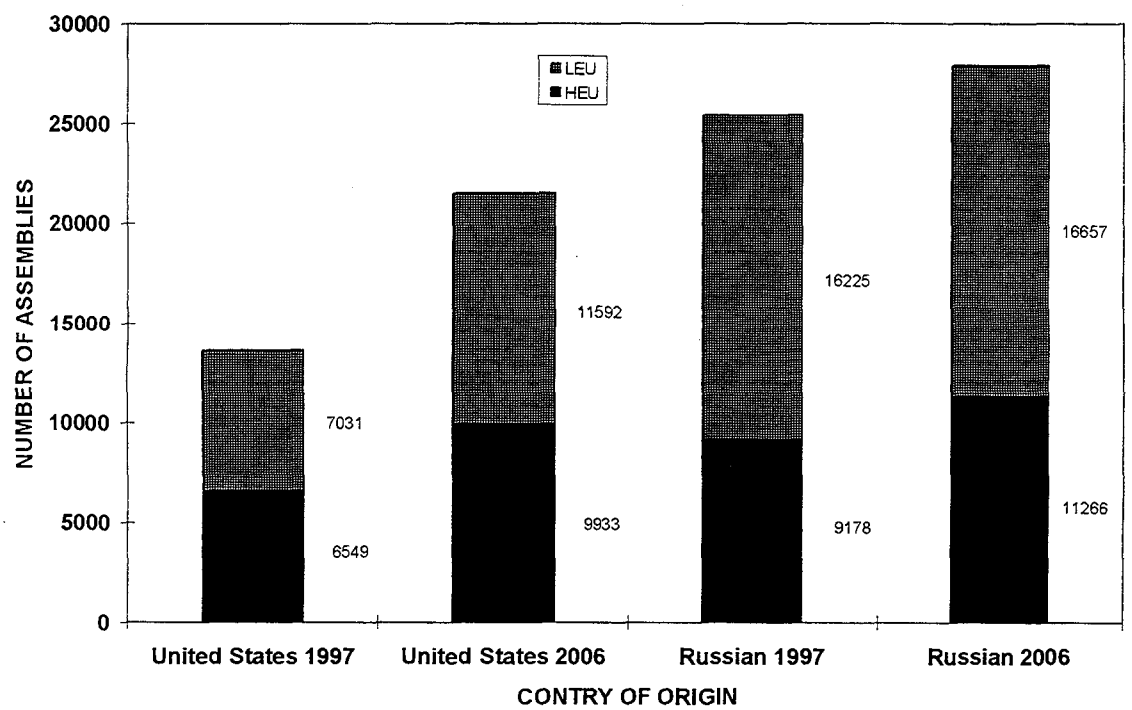

Figure 2: Present and Projected Spent Fuel at Foreign Research Reactors

Overall, there are 62,870 spent fuel assemblies stored in the facilities that have responded to the RRSFDB questionnaires to date and another 32,932 assemblies in the standard cores. Of these 62,870, 46,394 are in industrialized countries and 16,476 are in developing countries, while 22,686 are HEU and 40,184 are LEU. The numbers of US-origin and Russian-origin HEU and LEU spent fuel

assemblies at foreign research reactors which might be involved in take-back programmes are compared in Figure 2. At present, 13,580 spent fuel assemblies of US-origin are located at foreign research reactors, while the equivalent number of Russian-origin is 25,403. As mentioned above, RRSFDB involves only a limited number of the known research reactors in the world, nevertheless these data give an idea of the scope of the problem represented by research reactor fuels. On the basis of these data and a rough knowledge of the numbers of assemblies used each year, it is possible to make projections for the numbers of spent fuel assemblies that will be accumulated in the future. The projections for the total number of assemblies that might be eligible for return to the country of origin by 2006 are also presented in Figure 2. These projections assume no returns in the interim, which will not be correct in the case of US-origin fuel.

Wet and Dry Storage

Table II: Spent Fuel Storage Facilities.

STORAGE TYPE	AT REACTOR	AWAY FROM REACTOR
POOL	154	55
DRY WELL	25	31
VAULT	10	12
OTHER	18	6

As shown in Table II, by far the most commonly used form of spent fuel storage is the at-reactor pool, pond or basin. Since the average age of these facilities in the RRSFDB is 25 years, the success of wet storage, where the water chemistry has been well controlled, is remarkable. In fact, many aluminium clad MTR fuels and aluminium pool liners show few, if any, signs of either pitting corrosion or general corrosion after more than 30 years of exposure to research reactor water. Also shown in Table II are the many facilities that also have an auxiliary away-from-reactor pool or dry well. At away-from-reactor facilities, the trend is to transfer fuel from wet storage to dry storage, which avoids some of the expense of water treatment facilities and their maintenance.

Table III: Concerns Expressed by Respondents in Order of Importance

CONCERNS	PRIMARY	SECONDARY	TERTIARY	OTHER
FINAL DISPOSAL	101	18	13	1
STORAGE CAPACITY	12	10	5	6
MATERIALS DEGRADATION	10	11	9	7
ITERIM STORAGE	8	12	5	4
FINANCIAL	7	16	16	13
OTHER	7	1	2	4
CASK AVAILABILITY	5	14	6	2
WATER QUALITY	4	2	3	2
REACTOR SHUT DOWN	4	3	4	4
CORE UNLOAD CAPACITY	4	7	2	2
SELF-PROTECTION OF FUEL	4	8	13	2
AGING OF FACILITIES	4	11	16	6
WASTE RETURN FROM REPROCESSING	2	6	1	2

The concerns expressed by reactor operators about their spent fuel are listed in Table III. Not surprisingly, the majority are concerned about the final disposal of their fuel. This is followed by concerns about limited storage capacity, and materials degradation.

4. IAEA ACTIVITIES ON RESEARCH REACTOR SPENT FUELS

Besides maintaining the RRSFDB and supporting RERTR, the Agency was an observer in almost all of the meetings of the "ad hoc" group of research reactor operators, known as the Edlow Group, which successfully sought to return US-origin spent fuel from foreign research reactors. To aid such take-back programmes, the Agency has organized activities to help Member States to prepare their spent fuel for shipment back to its country of origin. The main activities in this area were a Training Course held at Argonne National Laboratory, USA, 13-24 January 1997 and the preparation of a draft "Guidelines" document on the same topic distributed to participants at the Training Course.

A Safety Guide on Design, Operation and Safety Analysis Report for Spent Fuel Storage Facilities at Research Reactors has been submitted for publication. During 1997 the IAEA convened a Technical Committee Meeting to collect and evaluate information on procedures and techniques for the management of failed fuels from research reactors and an Advisory Group Meeting on the Management and Storage of Experimental and Exotic Spent Fuels from Research and Test Reactors. Recognising that the degradation of materials, equipment and facilities through ageing is becoming of more concern to many operators, the Agency has organised several activities in the materials' science field. Prominent among these was the preparation of a document on the durability of nuclear fuels and components in wet storage which has been submitted for publication. This draft document contains information on aluminium clad fuels used in research reactors developed as part of a Co-ordinated Research Programme (CRP) on Irradiation Enhanced Degradation of Materials in Spent Fuel Storage Facilities. Another CRP is devoted specifically to research reactor fuel cladding and focuses on the monitoring and control of corrosion in wet storage. These programmes are supplemented by a series of Regional Workshops organised by the IAEA to deal with all aspects of spent fuel handling, management, storage and preparation for shipment.

5. CONCLUSIONS

In recent years the problems of spent fuel from research reactors have received increasing attention as concerns about ageing fuel storage facilities, their life extension and the ultimate disposal of spent fuel loom larger. The overall scope of these problems can be gauged by examination of the databases compiled and maintained by the IAEA. It is clear that more exposure of the problems and concerns and more international co-operation will be necessary to resolve the outstanding issues. It is also clear that take-back programmes of foreign research reactor fuels, if and when they are implemented, will not continue indefinitely. At some stage in the not too distant future (in 2006 for foreign research reactors with US-origin fuel), research reactor operators will be faced with having to find their own solutions regarding the permanent disposal of their spent fuel. For countries with no nuclear power programme, the construction of geological repositories for the relatively small amounts of spent fuel from one or two research reactors is obviously not practicable. For such countries, access to a regional interim storage facility and eventually a regional or international repository for research reactor fuel would be an ideal solution. The time is ripe for serious discussion of regional or international solutions and to begin planning for the day when neither take-back programmes nor the reprocessing option might be available.

REFERENCES

[1] INTERNATIONAL ATOMIC ENERGY AGENCY Nuclear Research Reactors in the World, IAEA Reference Data Series No. 3, December 1997 Edition (in press).

CH0100339

SPENT FUEL STRATEGY FOR THE BR2 REACTOR

P. GUBEL
Head BR2 Division
SCK•CEN, Boeretang 200, 2400 Mol - Belgium

and

G. COLLARD
Head Division Radioactif Waste & Cleanup
SCK•CEN, Boeretang 200, 2400 Mol - Belgium

ABSTRACT

The Belgian MTR reactor is fuelled with HEU UAlx elements and the fuel cycle was normally closed by reprocessing consecutively in Belgium (Eurochemic), France (Marcoule) and finally in the U.S.A. (Idaho Falls and Savannah River). When the acceptance of spent fuel by the U.S. was terminated, the facility was left with a huge backlog of used elements stored under water. After a few years, urgent and mandatory actions were required to maintain the BR2 facility operating. Later the accent was put on the evaluation of an optimum long term solution for the BR2 spent fuel during the projected 15 years life extension after the refurbishment executed between 1995 and 1997. The paper gives an overview of these successive actions taken during the last years as well as the handled various criteria for comparing and evaluating the available long-term alternatives. After commitment to reprocessing in existing facilities operated for aluminium fuels the focus of the BR2 fuel cycle strategy is now moving to the procurement of the necessary HEU fuel for securing the long term operation of the facility.

1. Introduction

The BR2 reactor of the Belgian Nuclear Research Center (SCK•CEN) at Mol, Belgium, was put into operation in January 1963. The BR2 reactor - figure 1 - is the SCK•CEN's most important nuclear facility and was operated in the framework of many international programmes concerning the development of structural materials and nuclear fuels both of the various types of nuclear fission reactors and for fusion reactors. The qualities and particular features of the reactor also designated it for performing experiments aiming to assess and demonstrate the safety of nuclear cores.

The facility was shutdown end of June 1995 for an extensive refurbishment programme after more than 30 years utilisation. The beryllium matrix was replaced and the aluminium vessel inspected and requalified for the envisaged 15 years life extension. Other aspects of the refurbishment programme aimed at reliability and availability of the installations, safety of operation and compliance with modern safety standards.

The reactor was restarted in April 1997.

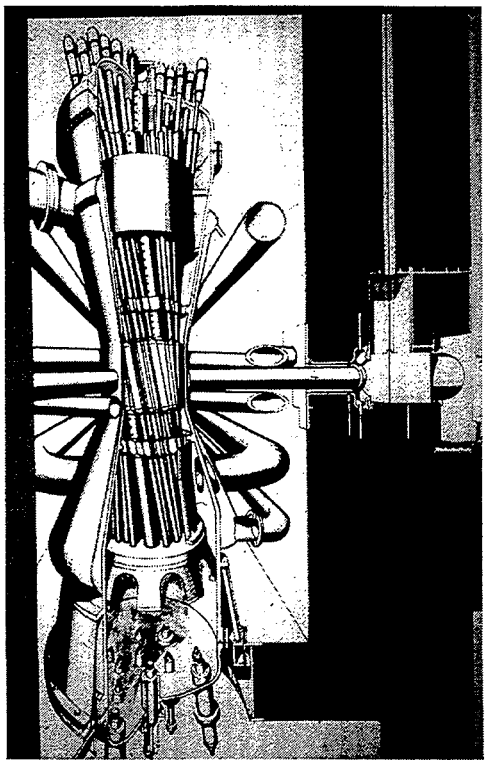

Fig 1. BR2 reactor.

2. BR2 conventional fuel cycle

From the first start-up in 1963, the BR2 reactor is using standard MTR fuel plates - 1.27 mm thick, 0,508 mm meat thickness - cladded with aluminium. Uranium-aluminium alloy fuel was first utilised. Change to cermet fuel material, obtained by blending UAlx powder with Al powder, occurred at the beginning of the 1970's.

The enrichment was and is still in the range 89 - 93 %. Small variations in the enrichment level are allowed and compensated by adjustments of the uranium density in the meat - 1.27 gU/cm^3 nominal -.

A standard BR2 fuel element consist of several concentric tubular shells (up to 6) - figure 2 - . Uranium loading was first 200 g U235 for a 6 plate fuel element, and is now 400 gU235 with the cermet type UAlx core.

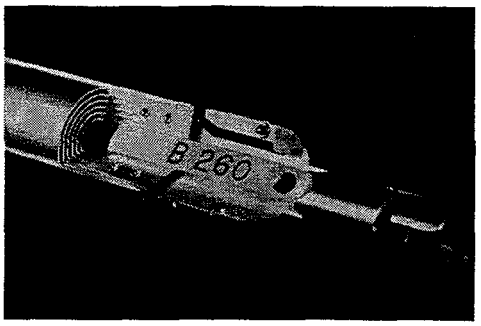

Fig 2. BR2 fuel element.

The procurement of the highly enriched Uranium (H.E.U.) occurred up to now only through the U.S.A.

The fuel cycle has been traditionally closed by reprocessing of the used fuel elements : in total 2326 fuel elements were sent first at Eurochemic (Mol, Belgium) from 1967 to 1974, then at Marcoule (Cogéma, France) and then finally in the U.S. (Idaho Falls and Savannah). Another batch of 144 fuel elements were ready for shipment to Savannah, early in 1989, when the USDOE decided not to renew its Off-Site Fuel Policy and despite the fact that an import Certificate for these 144 fuel elements was signed by the U.S. in June 1988.

3. Short term consequences and actions following the U.S. decision

Following the U.S. decision to halt the return of U.S. origin irradiated fuel, the BR2 facility was left with a huge backlog (± 670 fuel elements) of spent fuel elements resulting from the operation between 1982 and 1988.
Since then, the continued operation of the reactor required early in 1991 a limited expansion (2x56 F.E.) of the storage capacity to 800 standard fuel elements.
By the end of 1991, however, it became clear that a large expansion of the storage capacity was required to maintain the facility operating. Indeed, a renewal by the USDOE of its Off-Site Fuel Policy was evaluated as very improbable in the short term (2 ... 3 years). Moreover because of contractual irradiation obligations the BR2 reactor had to be operated until mid-1995 when it should be shutdown for a major refurbishment.
Thus early in 1992 a project started to expand the wet storage capacity. The objective was to increase the storage capacity to 1550 fuel elements. Such a large storage expansion involves a complete reshuffling of the storage channel with new designed high density storage racks. It means also a complete reanalysis of possible internal and external accidents. The project was approved in 1993 by the Licensing Authorities with two conditions:

- the storage channel should be inspected and refurbished;
- an alternate solution to underwater storage at the BR2 site should be available for the operation of the facility after refurbishment.

The first condition necessitated an urgent relief of ± 10 % of the total inventory in storage. The only readily achievable solution was at that time the reprocessing in the UKAEA-Dounreay facility. After the necessary contractual arrangements, 240 fuel elements - in total 10 shipments with the UKAEA Unifetch casks - were transferred successfully between November 1993 and April 1994.

Table 1 shows the evolution of capacity and occupation in the BR2 storage channel; variation in capacity is due to the replacement of old racks by high density racks and to the refurbishment of the storage channel.

	23-aug-93	1-nov-93	21-jan-94	9-aug-94	1-jan-95	1-jul-95
Actual storage capacity	895	895	1015	831	831	831
Planned evacuation of fuel	-	96	48	-	-	-
Actual occupation	845	860	728	656	676	676

Table 1. Evolution of capacity and occupation in BR2 Storage Channel (for standard fuel elements only).

4. Evaluation of possible long term solution for the end of the fuel cycle

The decision in 1994 by the SCK•CEN Board to refurbish the BR2 facility between mid-1995 and 1997, and the requirement of the Licensing Authorities to have in-time, thus in 1997, an alternate solution to the on-site underwater storage, created the necessary motivation to finalize the on going studies.

These studies were initiated early in 1992. The objective was to have a broad evaluation of all possible scenarios in the country and abroad: dry storage in containers, dry storage in canisters, reprocessing with and without reutilization of the recovered HEU, compared against the reference solution, being the evacuation/return of the fuel back to the U.S.

These different options are briefly characterized as follows:

- Dry storage in thick containers
The storage is foreseen in CASTOR-like containers filled with each 12 or 28 standard fuel elements. The casks are stored in an extension - to build on the Belgoprocess site - of the building foreseen as interim storage of vitrified waste from the belgian power plants. After an interim storage of 40 ... 50 years, the fuel should be reconditioned for geological disposal or reprocessed.

- Dry storage in thin canisters
The fuel is conditioned in thin canisters which are stored for 40 ... 50 years in an extension - to build - of a building foreseen for vitrified waste, on the Belgoprocess site.
After an interim storage, the canisters are disposed off underground or the fuel is reprocessed.

- Reprocessing with recovery of the uranium
After processing, the fuel is recovered, reutilized as H.E.U (~ 72 % enrichment) or blend down to < 20 % enrichment.
Cemented waste is returned to Belgium, stored for 40 ... 50 years in a dedicated building - to build - on the Belgoprocess-site and finally disposed off underground.

- Reprocessing without recovery of the uranium
After processing, the recovered uranium is diluted to 1 % enrichment. Waste is returned in Belgium and stored in an existing building - foreseen for vitrified waste from power plants - on the Belgoprocess site for 40 ... 50 years before final disposal underground.
These various alternate solutions were successively evaluated against various criteria : available techniques and safety, waste return, uranium recovery, overall costs, timing, availability in the future, politics.

These criteria are commented and evaluated here below:

Techniques and Safety

* Some doubts remain about the long term stability of aluminium fuels during interim storage;
* Underground disposal in clay - reference solution in Belgium - for HEU aluminium fuel was evaluated and excluded : indeed there is a non negligable risk for criticality.
  Underground disposal in clay does not foresee the presence of large amounts of metal, thus excluding the disposal of large casks;
* Availability of reprocessing facilities for aluminium fuels within 40 ... 50 years look very uncertain;
* Long term stability of cemented waste for underground disposal needs further evaluation;
* Characteristics and specifications of waste from power plants reprocessing wastes are very well known and accepted.

- Waste return

* The expected volume of cemented waste is very important (1 cemented 500 l drum for 3 ... 4 fuel elements).
* The expected volume of vitrified waste is very low (2 canisters of 180 l per Ton total metal)
* There is no waste return for the U.S. alternative.

- Uranium recovery
HEU recovery and recycling looks attractive. Certainly because of a lack of secure supply from the U.S.•HEU recycling has been positively demonstrated at BR2 in 1994-1995 with the irradiation of 6 test fuel assemblies. There are however penalties (lack of reactivity, short operation cycles ...) which can eventually be offset by alternate refuelling strategies using mixed HEU cores [1].

HEU. dilution and reuse for fabrication of LEU. fuel elements looked very speculative because there were no agreed specifications for fabrication.

- Timing of evacuation
A guaranteed planning of evacuation is mandatory, to demonstrate to the Licensing Authorities our commitment of reducing the on-site spent fuel inventory.
Also there is a need to continue efforts to refurbish the storage channel.

- Availability in the future
Ideally the choosen option should be available for a period covering the foreseen operation of the reactor after refurbishment.

- Overall costs
Certainly one of the most important weighing factors, not only because the large amount of fuel now in storage (± 4 T total metal) but also for all these spent fuels generated during the expected life of the facility.

- **Politics**

Uncertainties due to politics do exist in our European countries. They looked however much more reasonable than those associated with the situation in the U.S.•Politics can influence directly the level of costs, the timing of evacuation, the availability ... .

5. Final choice and long term commitment for the end of fuel cycle

In November-December 1996, the SCK•CEN Board of Directors and the Technical Liability Fund decided to opt for an optimal long term commitment on basis of the evaluations and criteria cited above.

The dry storage option, in casks or thin canisters, was at that time already abandoned, for its high costs and large uncertainties after an interim storage of 40 ... 50 years.

Even with a slightly higher overall cost than the U.S. solution, the reprocessing option offered by COGEMA was choosen mainly for its long term commitment (in principle, contract for the whole life of the reactor), the firm contractual arrangements (price, timing) and the low risks associated. The reprocessing option offered by the UKAEA was a lot more expensive, mostly due to the storage cost of the large volume of waste. Reutilization of the recovered uranium could not offset this disadvantage.

Date	U.S.D.O.E.	COGEMA	UKAEA
Nov-Dec. 1996	1.00	1.15	1.75
Feb. 1998	1.21	1.17	1.93

Table 2. Relative cost comparison of the available options.

The table 2 shows the relative overall cost comparison for the available options at two dates : end of 1996 when the decision was made and in February 1998. Cost comparison is done on the whole process: transport, processing, conditioning of waste, interim storage and final disposal of waste. Clearly the slight economic advantage for the U.S.-option disappeared with the higher cost of the U.S. dollar.

Evacuation of the BR2 fuel to COGEMA (La Hague) is planned to begin in July 1998. Seven transports in 1998 and 13 transports in 1999 are scheduled using the IU04 container (Pegase). Later on, the additional transfers will use the new TN-MTR container designed by TRANSNUCLEAIRE.

6. Conclusion

Following the U.S. decision not to renew its Off-Site Fuel Policy, the BR2 reactor was forced to expand its underwater storage capacity to secure the operation until the foreseen mid-1995 shutdown for refurbishment. Meanwhile, the different long term options for the back-end of the fuel cycle necessary for the life extension of the facility were examined. End of 1996, a final decision was taken for a reprocessing by COGEMA in its La Hague facility.

The focus of the BR2 fuel cycle strategy will now move to the procurement of the necessary HEU fuel for securing the long term operation of the facility. In this perspective the new high density fuels using LEU now under development to replace HEU, can only compete with the present UAlx fuels if they can be processed in existing facilities at an equivalent price.

7. Reference

[1] B. Ponsard, Trans. Conf. Research Reactor Fuel Management (RRFM '97) Bruges, Belgium, February 5-7, 1997, p. 74.

CH0100340

THE BACK END FOR RESEARCH REACTOR FUEL

ERIK B JONSSON

Studsvik Nuclear AB, S-61182 Nyköping, Sweden

ABSTRACT

The US policy to take back Foreign Research Reactor Spent Fuel of US origin for a period of ten years has given the research reactor society a reasonable time to evaluate different possibilities to solve the back end of the fuel cycle. Alternatives are reprocessing or final storage.

Promising solutions have been found for a final disposal of the spent fuel from the power industry in the deep rock. The methods are not directly applicable on the research reactor fuel as it is not compatible with the power reactor fuel. Therefore essential development of suitable techniques is required. The MTR fuels are typically Al-clad UAl_x or U_3Si_2, with much higher remaining enrichment than the corresponding power reactor fuel. The problematic areas when evaluating the conditions at the final repository are the high corrosion rate of aluminium and the risk for secondary criticality due to the high remaining enrichment in the fully burnt MTR fuel.

The task would be suitable for an international cooperation as it involves both the development of new fuel types and collecting corrosion data for the safe long-term disposal of the spent MTR fuel.

1. Background

The Atoms for Peace Program in 1955 granted supply of enrichment services to countries that promised not to develop their own enrichment process. The Swedish R2 reactor of MTR type was started under these premises in 1959. The supply of high enriched uranium was under contract with DOE containing specific request on the return of the spent fuel for reprocessing. This policy from the US side ceased in late 1988 due to new requirements of environmental documentation. DOE started working on an Environmental Impact Statement(EIS), but it was withdrawn after some critical comments. The storage space at most research reactors became in this period overfilled and DOE managed to proceed with an emergency shipment in 1994. Then in the spring of 1996 the long awaited new EIS[1] was presented, that through the ROD (Record of Decision) on May 19, 1996 stated that US-DOE was prepared to take back all HEU and LEU of US origin for the next 10 years.

The long period of uncertainty forced us in Sweden to consider alternatives for the back end of the fuel cycle. Reprocessing of HEU was studied as well as final disposal according to the Swedish deep rock repository method, KBS-3.

2. Intermediate fuel storage

Normally the research reactors are operated with the spare fuel assemblies in an adjacent pool to the reactor. The R2 reactor uses one of three pools for storage of partly and fully burnt fuel. The capacity of that pool is approx. 200 fuel assemblies, which is roughly four years of fuel consumption. The discontinued return of fuel to US in 1988 soon created a space problem in the pool. We were lucky to have a storage facility within our site with one small pool free. It was refurbished with new epoxy lining and new fuel racks for 140 elements were installed.

The storage building was, however, inadequate from the physical protection standpoint for HEU elements with more than 9 years of cooling time. They were not any longer self-protecting. Studsvik therefore had to apply for an emergency return shipment of fuel to US, which was granted under the Environmental Assesment procedure in 1994.

The physical protection problem forced us to look into a possible intermediate storage model with dry storage of the German type with the CASTOR-2 iron casks. The advantage of the dry method for long term storage has been widely accepted as it seems to give a prolonged intermediate storage period. In our case it would, however, meant an extensive investment in new equipment and a fundamental change in our fuel handling procedures. The return of the fuel to US-DOE make it possible for us to continue storing the fuel in the pools under controlled conditions.

3. Final disposition of spent MTR fuel

Safe methods for the final disposal must be developed for the MTR fuel as well as for the power reactors. That means extended tests of the long time processes involved when the fuel is stored forever. Two fundamentally different approaches have been made for storing the spent power reactor fuel. The first method involves encapsulation and storage under dry condition. This condition can be found in desert areas and salt mines. These areas have been dry for long periods even in a geological time scale and should thus form an excellent environment for storing the spent fuel for 100,000 years or more. The second method is based on storage in deep rock. In that case the spent fuel has to be canned and isolated from the ground water that penetrates the rock. This method will be used for final direct disposal of the spent fuel from the Swedish power reactors and has also been chosen in a couple of other countries as preferred disposal method[2].

4. Deep rock depository with MTR spent fuel

The common concept for direct disposal of spent power reactor fuel in Sweden, Finland and Canada is based on storage at depth (more than 500 m) in solid crystalline rock. Canisters with the spent fuel will be placed in boreholes. A layer of bentonite clay around the canisters will isolate them from the groundwater and also in case of a mechanical failure of the canister it will form a second barrier to radionuclide migration. The canisters will be made of stainless steel clad with thick solid copper or titanium in the AECL case.

The integrity of these systems are high with an expected lifetime of the canister of several thousands of years. The only significant migration of the activity to the surface is considered to be through the slow motion of the groundwater in the sparsely fractured rock.

Calculations of the predicted release from these systems show that the maximum doses after some tens of thousands of years lie between 0.01 to 1 μSv/year, which is at least 3 orders of magnitude lower than the natural radiation exposure today. Compare Figure 1.

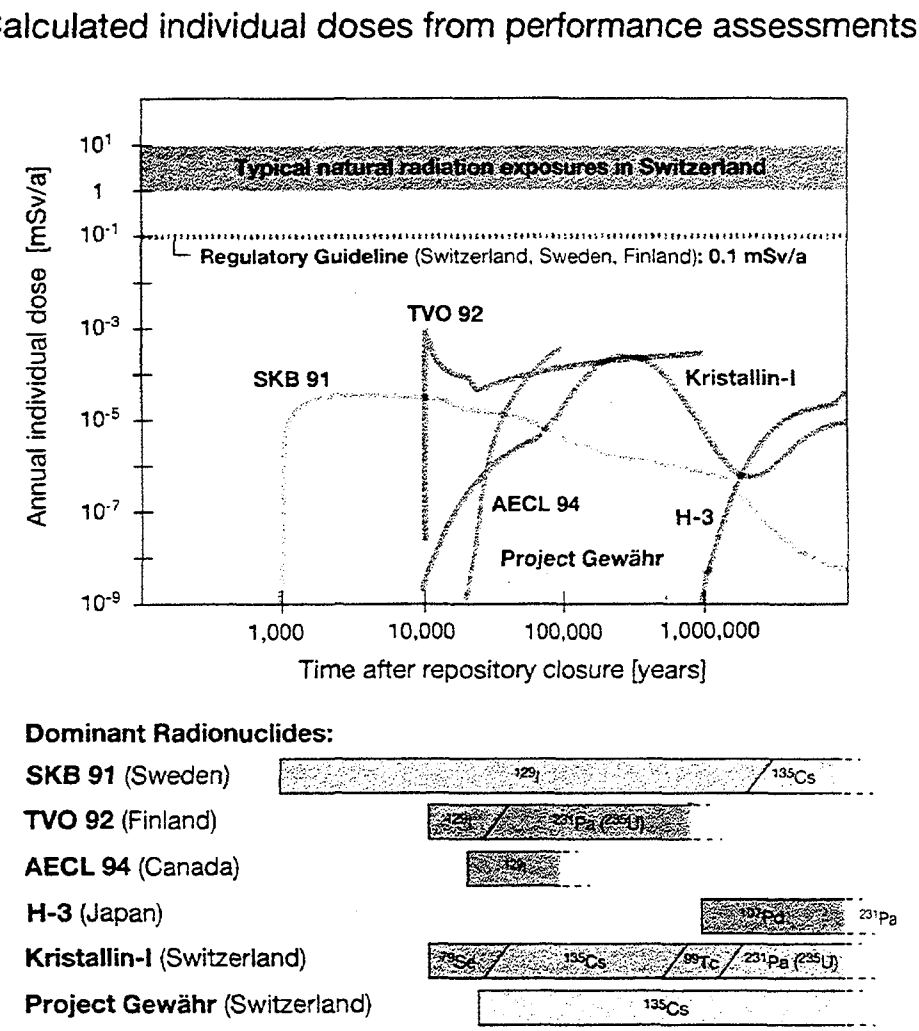

Figure 1. Calculated doses for reference cases for HLW and spent fuel disposal assessments [2].

In connection with the conversation studies for the introduction of LEU fuel at the R2 reactor in 1988 there was also a study of the possibility to make a direct disposal of the aluminium clad U_3Si_2 fuel using the current Swedish model, KBS-3. The main conclusion of the study was that further research had to be performed. The uncertainties were mainly on the corrosion rate of the cladding and subsequent leaching rate of the fission products and the transuranium elements in case of a groundwater intrusion into the canister. Some concern was also raised on the risk for a secondary criticality if the dissolved uranium is concentrated in some rock cavity. The investigation stopped at that point.

Last year the operating licence of the R2 was renewed and in that context the authorities asked for further studies of alternative back end solutions and direct disposal together with the power reactor fuel. A survey of the situation since the last study showed that the direct disposal model, SKB91, had changed only marginally. The decay heat and radioactivity from the proposed MTR loading of the canister are much lower than for a comparable canister with PWR fuel. Some new data for the long term stability of the aluminium and aluminium oxide was found[3], but the main objections to the direct disposal of the R2 silicide fuel remained. The high reaction rate of the aluminium metal in granite groundwater that could penetrate the betonite clay might in some cases cause considerable pressure increase from the formation of hydrogen gas. There has also been added concern that the aluminium clad fuel could jeopardise the total integrity of the disposal site, which of course is unacceptable.

5. References

[1] Final Environmental Impact Statement
Proposed Nuclear Weapon's Non-proliferation Policy Concerning Foreign Research Reactor Spent Nuclear Fuel
DOE/EIS-0218F, Feb. 1996

[2] Neall F. B.
Putting HLW performance assessment results into perspective.
Nuclear Europe Worldscan 3-4/1996

[3] Report from the Advanced Neutron Source (ANS) Aluminium Cladding Corrosion Workshop
21(5), 20451 INIS

CH0100341

THE EXPERIMENTAL TESTING OF THE LONG-TERM BEHAVIOUR OF CEMENTED RADIOACTIVE WASTE FROM NUCLEAR RESEARCH REACTORS IN THE GEOLOGICAL DISPOSAL CONDITIONS OF THE BOOM CLAY

A. SNEYERS, J. MARIVOET and P. VAN ISEGHEM
Waste and Disposal Department
SCK•CEN, Boeretang 200, B-2400 Mol - Belgium

ABSTRACT

Liquid wastes, resulting from the reprocessing of spent nuclear fuel from the BR-2 Materials Testing Reactor, will be conditioned in a cement matrix at the dedicated cementation facility of UKAEA at Dounreay. In Belgium, the Boom clay formation is studied as a potential host rock for the final geological disposal of cemented research reactor waste. In view of evaluating the safety of disposal, laboratory leach experiments and *in situ* tests have been performed. Leach experiments in synthetic claywater indicate that the leach rates of calcium and silicium are relatively low compared to those of sodium and potassium. *In situ* experiments on inactive samples are performed in order to obtain information on the microchemical and mineralogical changes of the cemented waste in contact with the Boom clay. Finally, results from a preliminary performance assessment calculation suggest a non-negligible maximum dose rate of 5 10^{-9} Sv/a for ^{129}I.

1. Introduction

A total of 240 spent fuel assemblies from the Belgian BR-2 Research Reactor has been shipped to UK Atomic Energy Authority (UKAEA) for reprocessing. At a dedicated facility at Dounreay, the resulting α-, β-, and γ-active raffinate will be conditioned in a cement matrix.
Given the presence of long-lived alpha-emitting radionuclides, the cemented Materials Testing Reactor (MTR) waste is considered for deep geological disposal. More specifically, the Boom clay formation is studied within the Belgian waste management programme as a potential host rock for the final disposal of radioactive waste. Up to now however, few data are available on the long-term physical and chemical stability of the cemented MTR waste in site-specific geological repository conditions. The present paper therefore aims to investigate the compatibility of the Dounreay cemented MTR waste with the conditions, prevailing in a geological repository in the Boom clay. The objectives of this study are:

- to assess the long-term durability, evolution, and behaviour of cemented MTR waste in the geological repository conditions of the Boom clay formation, and
- to quantify the release rate of radionuclides and/or chemical elements from the cemented waste product.

To this end, a laboratory testing programme, including leach experiments and *in situ* tests, has been set up. In addition, a preliminary performance assessment calculation has been made in view of evaluating the radiological consequences of disposal. In this paper, the experimental approach is described and preliminary results are given. The testing programme is expected to be completed by February 2000.

2. Laboratory leach experiments on inactive and active simulant cemented MTR waste samples

2.1 Experimental

The leach rate of the major cations, anions, and radionuclides is studied by performing laboratory leach experiments on inactive and active cemented MTR waste samples. Inactive samples were manufactured by AEA Technology Winfrith. These samples are composed of Ordinary Portland Cement mixed with lime, Blast Furnace Slag and simulated waste. The compressive strength of the samples was measured and equals 19.5 MPa. Active samples are being prepared by FZJülich using a liquid raffinate, obtained by dissolving a spent fuel element from the German DIDO research reactor. This raffinate is conditioned in a cement matrix according to the flowsheet applied at the Dounreay Cementation Plant.
In the experimental set-up, cylindrical cement paste disks are immersed in solutions simulating the composition of the claywater in a deep geological repository in the Boom clay formation at the Mol site. In the test programme, two scenarios are studied:

- the interaction of cemented MTR waste with groundwater in equilibrium with partly oxidised Boom clay, and
- the interaction of cemented MTR waste with repository groundwater in equilibrium with non-oxidised Boom clay.

The first scenario accounts for the case in which the cemented waste samples are exposed to Boom clay, containing pyrite that has been oxidised at contact with air or through bacterial activity. The second scenario simulates the behaviour of cemented research reactor waste in the *in situ* (reducing) conditions of the Boom clay formation. The *in situ* pH of the Boom clay water is 8.20 and the best estimate value for the redox potential is -250 mV (SHE) [1]. The leach experiments are performed at two temperatures (25 and 85 °C). After completion of the leach tests, the source term and leach rate of key-radionuclides and cations is calculated. The main experimental parameters for the leach experiments are summarised in Table I.

Table I: Overview of the main experimental parameters for laboratory leach experiments on Dounreay cemented Materials Testing Reactor Waste

Sample volume (cm^3)	Temperature (°C)	Redox conditions	SA/V (mm^{-1})	Test duration (days)
55	25 and 85	oxidising or reducing	0.0350	from 30 to 744

The test geometry is expressed by the SA/V-ratio, which is the ratio of the specimen external geometrical surface area in contact with the leachant to the leachant volume. In the applied test protocol, individual leach tests were performed at each test duration. After completion of the leach tests, the leachate solutions are ultrafiltered prior to analysis. The ion content in the leachate is determined by Inductively Coupled Plasma Atomic Emission Spectrometry (ICP/AES) and Ion Chromatography (IC). The radionuclide concentration in the leachate solutions will be measured by alpha-, beta-, and gamma spectrometry.
Results from leach tests on inactive cemented MTR waste samples for test durations up to 558 days are available and discussed below. Leach tests on active samples are planned to start in 1998.

2.2 Results and discussion

From the analytical results of the leach experiments on inactive cemented MTR waste samples, the normalised elemental depletion depths $(ND)_i$ for the major cations were calculated, using the equations given in [2]. The $(ND)_i$-values, derived from the laboratory leach experiments for test durations up to 558 days are summarised in Table II.

Table II: Normalised depletion depths ($(ND)_i$-values) for Ca, Si, Al, Na, and K.

Sample identification	Duration (days)	$(ND)_{Ca}$ (μm)	$(ND)_{Si}$ (μm)	$(ND)_{Al}$ (μm)	$(ND)_{Na}$ (μm)	$(ND)_K$ (μm)
Inactive leach tests at 25°C (anoxic testing conditions)						
DOU1B	30	<0.51	5.6	10.3	768	39
DOU04B	93	<0.66	8.0	12.1	989	47
DOU07-08B*	186	<0.65	8.4	14.5	1186	58
DOU10-11B*	372	<0.63	6.6	12.3	1245	59
DOU13-15B*	558	<0.47	3.3	15.1	1456	70
Inactive leach tests at 85°C (anoxic testing conditions)						
DOU19B	30	<0.57	4.1	22.4	2269	1860
DOU22B	93	<0.55	4.5	19.5	2029	1788
DOU25-27B*	186	<0.60	6.4	20.6	2547	2398
DOU28-29B*	372	<0.64	8.2	8.7	2538	2561
DOU31-33B*	558	<0.39	2.8	4.0	2483	2613
Inactive leach tests at 25°C (oxic testing conditions)						
DOU37B	30	<0.46	2.7	3.4	2505	2617
DOU40B	93	<0.040	0.0	6.0	969	624
DOU43-44B*	186	<0.045	0.0	6.6	1160	723
DOU47-48B*	372	0.022	2.6	10.4	1203	744
DOU49-52B*	558	0.10	3.2	13.8	1269	803
Inactive leach tests at 85°C (oxic testing conditions)						
DOU37B	30	0.01	0.02	4.5	1874	1499
DOU40B	93	<0.03	0.00	21.3	2139	1946
DOU43-44B*	186	<0.06	0.0	-2.7	2790	2625
DOU47-48B*	372	0.12	5.29	8.3	2655	2754
DOU49-52B*	558	0.23	0.28	4.2	2676	2830

*Average value for two/three samples

The results in Table II show that relatively high $(ND)_i$-values were measured at short test durations (e.g. samples DOU19B and DOU37B), These high values may be an artefact, resulting from the wash off the sample surface.

The calculated $(ND)_{Ca}$- and $(ND)_{Si}$-values (Table II) are relatively low compared to $(ND)_i$-values for Al, Na, and K. The highest $(ND)_{Si}$ values were measured in anoxic testing conditions. Comparison of $(ND)_{Ca}$ and $(ND)_{Si}$ at 25°C and 85°C shows that the leaching of Ca and Si from the inactive cemented MTR simulants is independent from temperature under the prevailing testing conditions.

The leaching of Na and K from the inactive cemented MTR samples is temperature dependent: the highest $(ND)_{Na}$- and $(ND)_K$-values were measured at 85°C (Fig. 1 and 2).

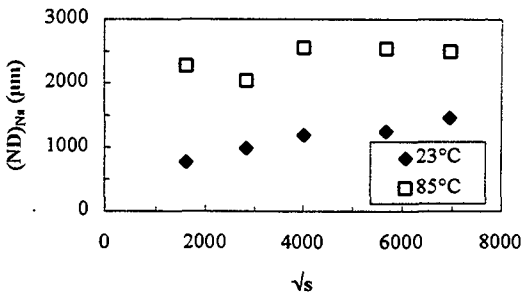

Fig. 1: The normalised depletion depth of sodium as a function of the square root of time in synthetic claywater at 23°C and 85°C (anoxic testing conditions).

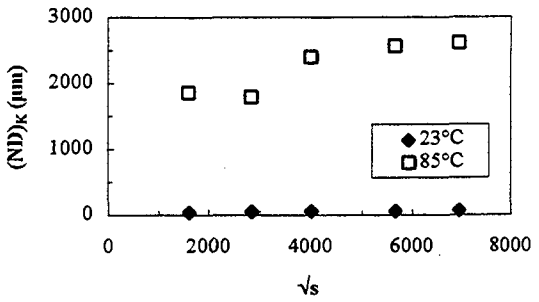

Fig. 2: The normalised depletion depth of potassium as a function of the square root of time in synthetic claywater at 23°C and 85°C (anoxic testing conditions).

Moreover, comparison of the $(ND)_K$-values in anoxic and oxic testing conditions shows that the highest leach rates are typical for the oxic testing condition while the leaching behaviour of Na seems to be independent from the redox conditions.

3. *In situ* experiments on cemented MTR waste sample in the HADES underground laboratory

In parallel with the laboratory leach experiments, the long-term behaviour of inactive cemented MTR waste samples is studied by *in situ* experiments. These tests are performed in realistic geological disposal conditions and allow a detailed study the cemented waste - clay interactions. To this end, inactive cemented MTR waste samples and other cemented waste forms of interest to the nuclear industry have been loaded on five meter long test-tubes. In particular four inactive simulant samples of cemented MTR waste were prepared by AEA Technology Winfrith for *in situ* tests. These samples are pine-apple shaped and have an external diameter of 69 mm. The central opening of the samples contains a heating element, allowing to perform tests at 25°C and 85°C. The test-tubes have been installed in the Boom clay formation at a depth of 220 meters below sea-level in the HADES underground laboratory (Mol, Belgium). This experimental set-up allows to bring the cement samples in direct contact with the Boom clay in realistic geological disposal conditions. The samples are exposed to the deep geological repository conditions for two test durations (12 and 24 months) and at two temperatures (25°C and 85°C). The *in situ* experiments were emplaced in the underground laboratory in February 1998 and retrieval of the samples is scheduled after test durations of one and two years. The microstructure and -chemistry of the cemented MTR waste samples will be investigated by Electron Probe Microanalysis, Analytical Electron Microscopy, and X-ray Diffraction.

4. Preliminary performance assessment calculation

A preliminary performance assessment calculation was made in view of evaluating the radiological consequences of the geological disposal of cemented MTR waste. It was assumed that a total of 240 spent MTR fuel assemblies will be reprocessed and conditioned in cement, resulting in 69 waste drums with a content of 500 litres. As the exact radionuclide content of the final cemented MTR raffinate is unknown, the calculation was made for research reactor fuel with 93% enrichment in ^{235}U and a burn-up of 45%. This case corresponds well to the characteristics of the spent BR-2 fuel (92.7% enrichment and burn-up of more than 50%). A cooling time to reprocessing and immobilisation of respectively one and six years was assumed. Input data on the radionuclide content of cemented MTR raffinate were taken from [3]. The performance assessment calculations consider a hypothetical radioactive waste repository located in the Boom clay formation at the Mol site where the cemented BR-2 waste is disposed in a concrete lined gallery, with an internal diameter of 3.5 m. It was assumed that two drums are placed in the section, which is backfilled with cement. The corresponding length of the gallery, required for the disposal of the 69 drums, is 42 metres.
For the near field calculations, the conservative assumption was made that the waste inventory is spread over the gallery volume, thus minimising the potential contribution of the solubility limits to the confinement of the disposed radionuclides. Sorption on the cement waste matrix, backfill and gallery lining was also neglected. For the far field, a minimal dilution in the aquifer overlying the host clay layer was supposed. In addition, the pumping of water from a water well located in this aquifer at one km downstream from the repository area was included in the scenario. Under these boundary conditions, the migration of a number of potentially important radionuclides through the host clay formation was calculated. A simplified aquifer model was applied to estimate the radionuclide concentration in the well water. These concentrations are multiplied with a biosphere conversion factor to calculate the corresponding dose rate. The calculated dose rates are given in Table III. The results of the preliminary performance assessment calculation are strongly dependent on the assumed boundary conditions and input data, which are at this stage still bound to a large degree of uncertainty. In this sence, the results of the performance assessment calculation are not conclusive and should be treated with caution.

Table III: Maximum dose rates (H_{max}) and their time of occurrence (T_{max}) calculated for a water well pathway in the case of the normal evolution scenario

Radionuclide	T_{max} (a)	H_{max} (Sv/a)
^{99}Tc	$4.0\ 10^{6}$	$5.3\ 10^{-27}$
^{129}I	$3.0\ 10^{4}$	$4.6\ 10^{-9}$
^{135}Cs	$2.0\ 10^{7}$	$1.3\ 10^{-17}$
^{235}U	$1.5\ 10^{7}$	$7.7\ 10^{-14}$
^{231}Pa	$1.5\ 10^{7}$	$2.1\ 10^{-16}$
^{237}Np	$2.0\ 10^{7}$	$2.2\ 10^{-15}$
^{233}U	$2.0\ 10^{7}$	$7.4\ 10^{-17}$
^{229}Th	$2.0\ 10^{7}$	$4.0\ 10^{-19}$

The highest maximum dose rate was calculated for ^{129}I. This dose rate ($5\ 10^{-9}$ Sv/a) is approximately two orders of magnitude lower than the maximum dose rate, calculated for the same pathway and scenario in the case of the disposal of the reprocessing waste corresponding to the present Belgian nuclear programme ($4\ 10^{-7}$ Sv/a for ^{129}I for an installed nuclear power of 5.5 GW(e) operated during 40 years) [4].

5. Conclusions

Preliminary results from leach experiments on inactive MTR simulant samples indicate that sodium and potassium are leached in simulated geological repository conditions of the Boom clay formation. It was also found that the leach rate of sodium and potassium significantly increases with temperature. Low normalised depletion depths were measured for Ca and Si, suggesting that these cations are more strongly retained in the cement matrix. The leaching behaviour of the major radionuclides, embedded in the cemented MTR waste, will be studied using active simulant MTR samples.
In situ experiments on inactive simulant MTR waste samples were started. These experiments will allow to study the interaction of the cemented MTR waste and the Boom clay. Results from two test loops are expected to be available by February 1999.
A first performance assessment calculation suggests that maximum dose rates for the major actinides and most fission products are low. For ^{129}I however, a non-negligible dose rate was calculated.

6. Acknowledgements

C. Jolliffe (AEA Technology Winfrith) is kindly acknowledged for manufacturing the inactive simulant samples for leach tests and *in situ* experiments. The authors express their thanks to P. Boven for technical assistance and X. Sillen for his contribution to the preliminary performance assessment calculation. Leach experiments on active cemented MTR waste samples and *in situ* experiments in the HADES underground laboratory are financially supported by the European Commission under contract FI4W-CT96-0030.

7. References

[1] A. Dierckx, Boom Clay *in situ* porewater chemistry. SCK•CEN, Belgian Nuclear Research Centre, Mol, report BLG-734, 1998, p. 4.
[2] Nuclear Waste Materials Handbook. Test Methods. MCC-1P Static leach test method. Pacific Northwest Laboratory, Richland, Washington, PNL-3990, p. 1-35.
[3] Intermediate level residue specification Dounreay cemented liquid wastes. AEA Technology, February 1992, 81 p.
[4] Marivoet, J, Updating of the performance assessments of the geological disposal of high-level and medium-level wastes in the Boom clay formation. SCK•CEN, Belgian Nuclear Research Centre, Mol, report BLG-634, 1991.

CH0100342

SPENT FUEL MANAGEMENT IN VVR-S REACTORS

A.M. CLAYTON,
AEA Technology plc, Risley, Warrington, WA2 0TG, UK

M.T.CROSS,
AEA Technology plc, Windscale, Cumbria, CA20 1PF ,UK

J.M. GARCÍA QUIRÓS and R. GARCÍA-BERMEJO FERNÁNDEZ
INITEC, Padilla,17, 28006 Madrid, Spain

ABSTRACT

The spent fuel management in four research reactors in the Czech Republic, Hungary, Poland and Romania has been assessed in a European Commission funded project. Nearly all the spent fuel has been stored in ponds, and the conditions required for long term pond storage are reviewed. Because of the eventual risks of corrosion of the cladding, the aim is to store the fuel dry. Current individual schemes in Poland (turning the de-commissioned reactor vault into a long term storage vault), Hungary (canning the fuel in aluminium) and Romania (using storage casks) can be integrated into an overall cost-effective common strategy. Finally, the difficult problem of eventual fuel disposal is discussed.

1. Introduction

Research reactors of the Soviet VVR design have been in operation in a number of Eastern European countries since the late 1950's and none of the spent fuel been disposed of. It has been stored in cooling ponds on the reactor sites. It had been anticipated when the reactors were built that the fuel would be returned to Russia for reprocessing and disposal of the reprocessed wastes, but with the break up of the Soviet block, this is no long possible without considerable payment. The countries were therefore left with a major problem of dealing with the spent fuel on a limited budget. A European Commission project [1] has been carried out to evaluate the safety of the spent fuel management in the Czech Republic, Hungary, Poland and Romania, and make recommendations. This is part of an overall study of spent fuel management, waste management and decommissioning planning of the reactors. This paper describes some of the results of this project, by giving requirements for wet storage, and the future possible means of dry storing the fuel. Individual activities, which had been under development in each of the countries, can be combined to produce a coherent strategy for all of the reactors.

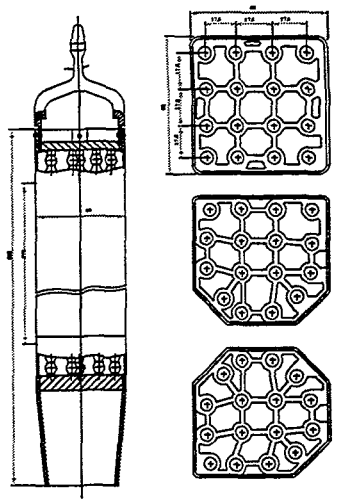

Figure 1 EK-10 Fuel

2. Reactor history and fuel arisings

The four reactors in this study are the VVR reactor at Magurele, Bucharest, Romania, the EVA reactor in Warsaw, Poland, the Budapest Research Reactor at AEKI, Hungary and the LVR-15 reactor at NRI, Rez, Czech Republic. All of these reactors began as standard VVR-S reactors with EK-10 fuel elements, of the type shown in Figure 1.

The reactors subsequently up-rated to higher enrichment fuel. In 1984, a 36% enrichment version of the rodded fuel was introduced in the **Magurele** reactor, designated S-36, was used. In 1974, a new fuel element was introduced at **Rez** with 80% enrichment, IRT-2M. A similar fuel, still referenced as IRT-2M, was introduced in 1996, which had 36% enrichment and used uranium dioxide. Stocks have been obtained of a new 36% enrichment fuel with more concentric rings known as

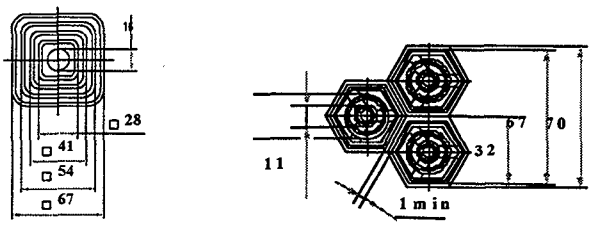

Figure 2 IRT-2M and VVR-M2 fuel

IRT-3M. A different plate type fuel, VVR-SM, was introduced in **Poland** and **Hungary** in 1967 with 36% enrichment. This fuel element was used in single assemblies or as a combined triple element. In 1988 in Poland and in 1996 in Hungary a slightly modified version of this type of fuel was introduced, reference VVR-M2, Figure 2.

The reactors in Poland and Romania have now shut down. Long-term programmes remain for the Czech and Hungarian reactors.

3. Current wet storage and its potential problems

The spent fuel from the reactors is initially cooled in an at-reactor (AR) pond, built originally to a common standard as part of the reactor system. The fuel is then transferred to an away-from-reactor (AFR) pond on the reactor site, the design of which is different in each country. To prevent corrosion of the aluminium clad fuel, the water in the ponds has to be carefully controlled. This has generally be achieved with only low levels of fission products (caesium-137) being detected in the water after storage for 30 years, some of which may result from uranium contamination on the outside of the original fuel.

The aluminium cladding used for all the VVR research reactor fuels is SAV-1, which contains silicon and magnesium. It is very similar to AW 6063 used in Western Europe and America. Maintaining the pH between 5 and 6.5 produces very low corrosion rates below 70°C of less than 4 μm/year [2]. At this rate a 0.9mm clad wall will not corrode for 200 years.

The main cause of corrosion is pitting at random points. Pits form from the surface contact of ions in the water, notably chlorine, copper, iron and aluminium, and the concentration of these needs to be well below 0.1 ppm. An overall measure of the ion content is given by the conductivity. Freshly de-ionised water has a conductivity of 0.5 μS/cm, which rapidly rises to 1 μS/cm due to chlorine and carbon dioxide from air interactions with the water. Values of conductivity above 10 μS/cm are known to cause rapid pitting [3]. Pitting is enhanced by galvanic action between aluminium and other materials, such as iron. Pits have resulted from using stainless steel hangers for aluminium fuel elements [4]. A similar effect occurs from thermocouples in slots next to the fuel elements. Pitting is also enhanced by scratches, which remove the oxide layer.

The water chemistry can be considerably worse in confined areas from that in the main pond, and pitting has occurred on fuel cladding in two zero energy reactors in the Czech Republic (at the Skoda reactor and at the Prague Technical University), as well as on unirradiated fuel stored in the NRI reactor annex ponds (Czech Republic), as a result of stagnant conditions between fuel elements. The problems are not so severe in higher power research reactors as the heat generated in the fuel induces natural circulation of the flow next to the fuel elements. However after long periods of decay, the reduced heat generation may again result in stagnant conditions in ponds and cause cladding decay. It is therefore now generally acknowledged that the water in ponds should be circulated.

Once the cladding is breached, aluminium uranium dioxide fuel meat is not likely to suffer enhanced corrosion as the electro-chemical potential of the fuel is very close to that of the cladding. The situation with the magnesium matrix in EK-10 fuel is much less clear. A pH of around 11 is required to prevent corrosion of magnesium and it forms a sacrificial anode to aluminium at lower pH values. It is therefore likely to have increased corrosion rates. No work has been done to study the release rate of fission products following clad penetration due to pitting.

If the conditions outlined above are not maintained, pitting corrosion of the clad will occur, and fission products will eventually be released into the storage pond water. Because the pits are small, regular fission product monitoring in the water should identify the problem. The caesium-137 activity levels per unit volume of fuel have been calculated as 4×10^6 Bq/mm^3 for EK-10 and VVR-M2 fuel, and 1×10^7 Bq/mm^3 for VVR-SM. Using the caesium-137 level in a particular pond, the water volume and the type of fuel present in the pond, the volume of fuel released can be evaluated. Assuming that a typical pit has a volume of about 1 mm^3, the number of pits can then be estimated. Further work is needed to determine the rate at which the release develops and to identify the leaking fuel element.

Since there is no immediate prospect of disposal of the fuel, longer term measures are being considered which will avoid this detailed care of water chemistry and fuel monitoring. These are considered in the next section.

4. Storage options for research reactor fuel and approaches in each country

A number of interim storage options are possible, either based on the current wet storage or on dry storage. An overview of the transfer of fuel and decision points (shown by diamonds) is given in the diagram below.

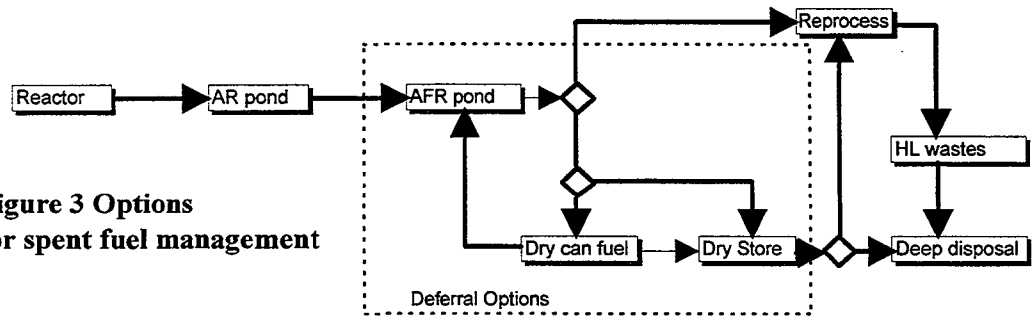

Figure 3 Options for spent fuel management

By considering only well developed options for interim storage being carried out by competent organisations familiar with nuclear operations and regulations, there are few concerns on most of the factors to be considered in making a choice of storage system. These options are:

Wet storage: Degradation of the fuel cladding due to corrosion, degradation of the pond structure, monitoring of the fuel and water chemistry, cost to organisation for maintaining the water chemistry over future periods, limited capacity.

Dry storage: The need for multiple barriers for containment of fission products, fuel handling, public acceptability and cost. In the case of multiple barriers, one barrier may be the fuel cladding, and, if so, particular care is needed with fuel drying and preventing cladding corrosion. An alternative is canning the fuel to provide an extra barrier.

Dry fuel storage is increasingly used for nuclear power plant fuel, and is a logical consideration for research reactor fuel. Already at Rez, EK-10 fuel has been stored dry in closed but unsealed individual concrete drums since 1976. The current state of this fuel is not known. Aluminium clad research reactor fuel has been dry stored in Australia since 1972, and was shown to have negligible deterioration after 11 years, when it was opened for inspection [5]. The individual elements were stored in aluminium cans and two cans placed in a stainless steel canister. The canisters are stored in 50 16 m long holes drilled in sandstone and lined with stainless steel. The tubes are filled with nitrogen to inhibit corrosion.

Like the Australian experience, the spent fuel in the four reactors in this study can be stored under a cover gas, such as nitrogen. One way of providing this cover gas is to enclose the fuel in a can, which

is filled with nitrogen. Based on calculations carried out for this project, the heat levels in the fuel are such that, except for very recent fuel, overheating is not anticipated. Work has recently been reported on the drying of fuel for installation in cans [6]. Vacuum drying was found to remove 28% of the water, which is essentially the free water on the fuel. Heating was required to remove the waters of hydration in the oxide layer on the fuel surface. Air at nominally 100°C applied for 2 hours removed 60% of the water after previous vacuum drying. No damage, for example due to water in small cavities bursting through the cladding, was found to occur.

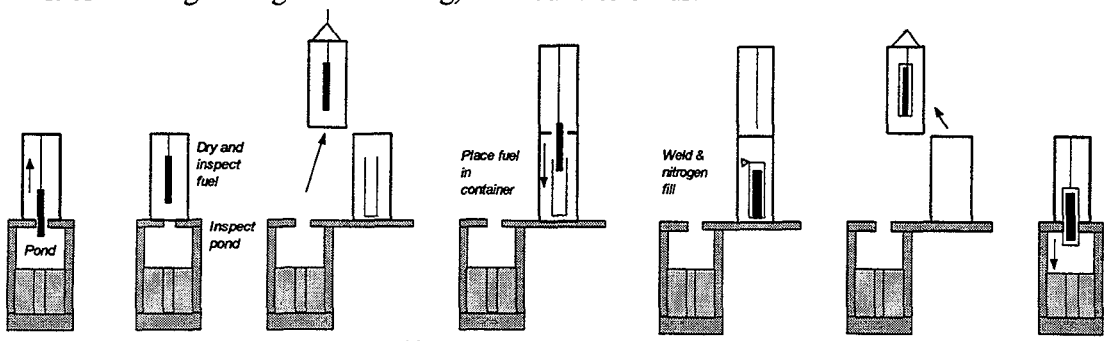

Figure 4 AEKI Fuel canning system

A design has been developed at AEKI in Hungary for the drying and inspection of fuel, followed by canning and filling the can with nitrogen. The general procedure is shown in Figure 5 and it is anticipated that the canning time for an element will be about 3-4 hours. The aluminium cans are 98mm outer diameter with a 3mm wall thickness, and will accept all fuel types.

One application of this system is to be able to return the fuel for storage in the ponds. The value of this is that no additional storage facility is needed. Where the plant is continuing to operate, so that monitoring, maintenance and safeguards activities are being provided, this is a cost effective way of avoiding the problems of fuel degradation. Heat removal, criticality and radiation protection have been assessed in Hungary and will meet international standards by applying the same criteria as those used for the existing ponds. An additional feature of this system is that the canned spent fuel will be in a similar material and of a similar size to uncanned spent fuel, which will not therefore affect any of the eventual disposal routes.

Dry storage in metal casks is used in several countries for the storage of commercial reactor fuel. The metal casks have the additional advantage that they can be used to transport the spent fuel from an interim store to the final fuel disposal location. The cask normally contains one or more cavities that can be used to store several spent fuel assemblies. The metal cask is designed to resist seismic loads, high winds, missile strike and accidental drops. Shielding is provided primarily by the cask structural material, typically steel, lead or cast iron. Decay heat removal is achieved by conduction of heat through the metal walls and then cooling of the external surfaces by natural convection. The main disadvantages of the metal casks are cost, weight and the possibility of seal leakage. A sister reactor of the four reactors under consideration, Rossendorf RFR in Germany, proposes to use CASTOR MTR 2 transport and storage casks made by Gesellschaft für Nuklear-Behälter mbH of Essen, and this approach is also favoured in Romania.

At the EVA reactor in Poland, which is being decommissioned, it is proposed to create adequate storage space for all the spent fuel inside the reactor vault by removing the thermal column and the reactor tank with its concrete block, equipment and cast iron support plate. A stainless steel separator will then be installed containing 198 dry storage channels with an internal diameter of 106mm. The separator will rest on a support plate connected to active drainage system in order to collect any water generated inside the channels (e.g. from condensation).

All these initiatives can be put forward into a coherent strategy aimed at dealing with all the concerns on each site: Clearly, the ideal aim would be to find a means of disposal of the fuel. This does not

appear to be an immediate prospect for logistical, political and cost reasons. As long as the reactors are operating, maintaining the water chemistry and monitoring the fuel in the storage ponds is within the normal management capabilities at the reactors, and the fuel is likely to be safely stored in the ponds for another 5 years or so. In the event that the fuel deteriorates, canning of the fuel using the Hungarian system would enable continued pond storage. If there is eventually a problem of capacity after consideration of fuel reracking in existing ponds, casks would provide a suitable (but fairly expensive) means of storage. Once the reactors are eventually shut down, the storage of the fuel in the reactor cavity, as planned at EVA, becomes a possibility, and the experience of doing this at EVA should be available to other operators. The dry stored fuel could well be canned using the Hungarian system. If the reactor cavity is not immediately available, for example due to the decommissioning needs of keeping the reactor tank in situ until the reactivity has reduced (to reduce the dose to the decommissioning team) then again casks provide an interim means of storage.

5. The long term problem of disposal

Deep disposal of aluminium clad research reactor fuel without reprocessing is still in the early stages of being evaluated, throughout the world. To be viable it would have to be associated with the deep disposal of nuclear power plant (NPP) fuel (which is not an option in Poland). However, the research reactor fuel is likely to require special consideration with regards to the form of the canister used for storage of the fuel in order to avoid rapid corrosion of the clad. In addition it may also require special consideration with regards to nuclear safeguards, even if deeply disposed, because of the fuel's high enrichment. It may be that the NPP fuel will provide an extra measure of self protection if the fuel can be integrated with the NPP fuel in storage. Further work on the deep disposal of fuel would be necessary if the reprocessing option were foreclosed at any stage.

Reprocessing produces high level wastes and enriched uranium. Assuming that arrangements are made with the reprocessing organisation or others for the blending of the fuel to below 20% enrichment, and that this uranium is then sold to a fuel producer, criticality and safeguards issues will be adequately addressed. Reprocessing, however, creates three further problems, the high level waste disposal, the transport of the fuel to the reprocessing site and the cost. These problems have largely been overcome in United States designed reactors by their current disposal agreements but no resolution of this problem has been possible yet on Russian designed reactors. This is perhaps the most important issue and needs international assistance in its resolution.

6. Acknowledgements

This work was carried out under Project PH4.01/94 to the EC Phare programme. Many people at each reactor and in the authors' establishments assisted the work and their contribution is gratefully acknowledged.

7. References

1 Project PH4.01/94: Regional Study of Soviet Designed Research Reactors.
2 Argonne National Laboratory, 'Water Corrosion of Aluminium Alloy Claddings', Appendix I-3 in 'Research Reactor Core Conversion Guidebook Volume 4 Fuels' IAEA TECDOC 643 (V4) 1992.
3 J.P. Howell, 'Durability of aluminium-clad spent nuclear fuels in wet basin storage' NACE Corrosion 96 conference, Paper 128, 1996.
4 J. P. Howell, 'Storage of aluminum clad fuel and target alloys in the SRS disassembly basins'. Westinghouse Savannah River Company, SRT-MTS-92-3011, 30 April 1992.
5 A. Ridal and P. Bull, 'Spent HIFAR fuel elements. Behaviour under extended dry storage', ANSTO/E7,19 September 1994.
6 R.E. Lords, E.W. Williams, J.C. Crepeau and R.W. Sidwell, 'Drying Studies of Simulated DOE Aluminium Plate Fuels'. Idaho National Engineering Laboratory, INEL - 95/00437. Presented at American Nuclear Society Topical Meeting on DOE Spent Nuclear Fuel and Fissile Material Management, June 1996.

CH0100343

MTR SPENT FUEL BACK-END COGEMA LONG TERM COMMITMENT

J. THOMASSON

Assistant to the Director, International Business - Reprocessing Branch
COGEMA, 2 et 4 rue Paul Dautier, 78140 Vélizy, France

ABSTRACT

MTR spent fuel back end has been subject to many reversal and uncertainties in the past 10 years.
Until the end of 1988, US obligated materials were subject to the « Off site Fuels Policy » (OFP) . Under this policy, spent fuels were returned to USA, and were reprocessed there.
This OFP took end the 31th of December 1988, and Research Reactors'operators had to implement others solutions : On site storage or Reprocessing in Europe.
Meanwhile the RERTR Program was leading to a new LEU fuel to replace HEU aluminide. This new silicide fuel has one main drawback : it cannot be reprocessed in working plants without some process main line modifications. Fortunately, a new Research Reactors spent fuels return policy has been set up by the US in the early 1996. This new policy apply to all reactors converted or that have agreed to convert to LEU, and reactors operating with HEU for which no suitable LEU is available. It covers all the spent fuels discharged until 2006/05/12. But after that period of time, each reactor will be fully responsible of its spent fuels.
What would be the Back-End solution for Silicides at that time ?

Spent fuels Back End solutions should not rely on political matters.

Since the end of 1996, COGEMA is proposing reprocessing services for Aluminides spent fuels, based on La Hague capability. This COGEMA answer is for the Long Term, as La Hague plant has a good load for the coming years, including the first decade of the next century. Further, this activity benefits from a strong R&D support, that allowed to fulfill the evolutive needs of our customers, and gives us the ability to adapt the plant to the future market.

Taking advantage of this flexibility, COGEMA offers Research Reactors' operators a Long Term commitment. Already two reactors' operators have chosen to contract with COGEMA for the whole life of their reactors. The contracts execution is under progress and the first transportation will take place soon.

Beside today's services, COGEMA is involved in R&D activities to support new fuels development enhancing present LEU performances and having the ability to be reprocessed. This new fuel should be available within 10 years to provide a steady Back End solution for Research Reactors spent fuels, at the end of the new US Return Policy.

COGEMA wishes to be able, as for Aluminides, to propose for that new fuel a Long Term Back End solution, including all the spent fuel management operations, to allow Reactors' operators to focus on their research activities. Such a partnership, should provide Reactors' operators with smooth operations, which is necessary for a Long Term development of Nuclear Energy.

SPENT FUEL BACK-END: 10 YEARS OF STOPS AND GOES

Material Testing Reactor (MTR) spent fuel back-end has been subject to many reversals and uncertainties in the past ten years.

Until the end of 1988, US obligated materials were subject to the « Off site Fuels Policy ». Under this policy, spent fuels were returned to USA and were reprocessed there. This policy took end on the 31st of December 1988, and Research Reactors' operators had to implement other management solutions. Meanwhile the Reduced Enrichment for Research and Test Reactors (RERTR) Program was leading to a new Low Enrichment Uranium (LEU) fuel to replace High Enrichment Uranium (HEU) fuel. HEU aluminide type fuel could be stored and eventually reprocessed. The new LEU fuel offers a suitable answer to the Non Proliferation Policy. However, as a silicide type fuel, it offers a reduced flexibility as regards the back-end management since it is not easily reprocessed in industrial scale plants.

In the early 1996, a new US spent fuel return policy was opened to all research reactors converted or that have agreed to be converted to LEU, and to reactors operating with HEU for which no suitable LEU is available. It covers all the spent fuels discharged until 2006, 12th May.

After that period of time, each reactor will again be fully responsible of its spent fuels.
Such a situation puts again on the forefront, the problem of the overall management of each research reactor. For each one, a steady and long term solution for the management of their spent fuels has become compulsory for their continued operation. The Safety Authorities of each concerned country are demanding more and more overall assurances as regards the spent fuel back-end management.

WHICH BACK-END OPTION FOR MTR SPENT FUELS ?

Exiting the reactors, there will be two main types of MTR spent fuel to be managed in the coming decade:

- the HEU aluminide spent fuels, which will be in ever decreasing number,
- the LEU silicide spent fuels, which are, as of today, the only substitute to the HEU fuels.

For the ultimate back-end management, there are two options: direct disposal or reprocessing.

The direct disposal option faces several unresolved difficulties. The high residual fissile material content could lead to criticality problems in the final repository. The high corrosion rates of aluminium and uranium metals are creating a risk of high pressure increase with the build up of hydrogen gas. Direct disposal has not yet been implemented.

The Reprocessing option.
This option eliminates such difficulties while producing residues which are suitable for direct disposal.
Reprocessing has been successfully implemented for more than 30 years.
Based on its long experience and thanks to its up to date facilities, COGEMA offers through its reprocessing services a durable and long term solution.

The only proven and steady back-end solution is, on the long term, reprocessing

MTR BACK-END INDUSTRIAL IMPLEMENTATION: THE COGEMA ANSWER

HIGH EXPERIENCE, FLEXIBILITY AND VERSATILITY of the LA HAGUE FACILITIES

The COGEMA reprocessing services for MTR aluminide spent fuel are from now on performed in the La Hague's facilities which constitute the world largest reprocessing plant with a nominal capacity of 1600 tU of LWR spent fuels. The plant, whose first line started in 1966 and successively expanded in 1989-1990 (UP3) and in 1992 (UP2 800), has reprocessed 1670 tU in 1997, and is scheduled to operate far into the second decade of the next century.
Over 11 900 t of fuel have been reprocessed at La Hague by January 1, 1998. Among this total quantity of reprocessed fuels, 10 tons are FBR fuels.

At its Marcoule UP1 plant, COGEMA has reprocessed over 12 800 kg of MTR spent fuels from various origins, such as Osiris, Siloë, Pégase etc... from the Commissariat à l' Energie Atomique (CEA), RHF of ILL, BR2 of Belgium, GKSS and KFA of Germany, HFR and HOR from the Netherlands, JMTR and JRR2 from Japan etc....

So COGEMA has gained a large experience and a great know-how in MTR fuel reprocessing.

La Hague plant is already available for aluminide and UO_2 spent fuel coming from MTRs.
In addition, research and development works are in progress to reprocess silicides, Metallic Natural Uranium and some other special fuels.

In the case of UO_2 MTR spent fuels, the standard reprocessing operations are basically followed.

The typical process diagram for aluminium structure MTR fuel reprocessing is the following:

- Reception of MTR spent fuel casks.
- Unloading under wet conditions.
- Storage in pool.
- Dismantling (if necessary) and dissolution.
- Dilution of dissolution solution into LWR dissolution solution.
- Extraction and purification of Uranium and Plutonium.
- Vitrification of Fission Products.
- Treatment and conditioning of the wastes into residues.

Some minor plant adaptations could be necessary , on a case by case basis, to cope with specificity of each MTR fuel type.
Further, this activity benefits from a strong R&D support, that allowed to fulfil the evolutive needs of customers, and gives COGEMA the ability to adapt its plants to the future needs.

ULTIMATE PRODUCTS MANAGEMENT THROUGH REPROCESSING

The main management features are:

- **Separating and Recovering of the recyclable materials (uranium and plutonium) with a very high rate (99,88%).**

- **Safe , qualified and reliable confinement of the ultimate residues.**
  Residues are processed as genuine industrial products according to very demanding technical specifications approved by international regulatory bodies.
  The ultimate residues are conditioned in a standardized and qualified (see picture 1) container called the « Universal Canister » (UC).
  This canister can accommodate either vitrified residues or compacted or technological wastes. Its weight is around 500 kg for glass products and 800 kg for compacted residues. The UC is 1,34 m high and has a diameter of 43 cm.
  This package is agreed in France and many foreign countries by the Safety Authorities, the customers and the storage operators. (see Table 1)

Table 1: **Approval of specifications (Status as of January 1998)**

Waste	**Residue**	**Status**
Fission products	Glass	**Specification approved in**: France, Japan, Germany, Belgium, Switzerland, Netherlands
Hulls and end-fittings Technological waste	Metallic block compacted	**Specification agreed by** French, German, Japanese and Swiss **customers** **Specification under final** review by the French Safety **Authorities**

Picture 1: **Universal Canister Strategy**

UNIVERSAL CANISTER STRATEGY

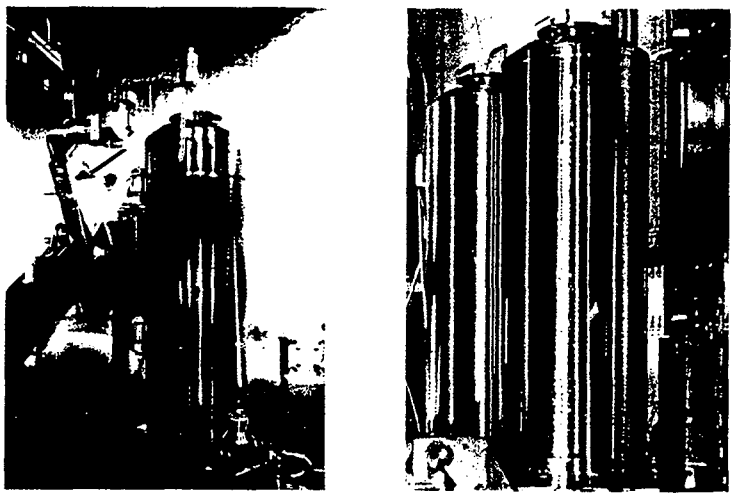

Glass canister

Hulls, end-fittings, technological waste canister

3/03/0729/2b

➡ **Reduction of the ultimate residues overall toxicity and volume.**
COGEMA's efforts to reduce the final volume of ultimate residues, makes it possible today to generate only two Universal Canisters (one for vitrified fission products and one for compacted residues) for every ton of reprocessed aluminide spent fuel. Compared to the direct disposal option, the reprocessing solution, as offered by COGEMA to the MTR operators, represent a drastic volume reduction of waste which will have to be ultimately put into the final disposal.
It is illustrated by the thereunder graphic.

VOLUMES OF RESIDUES GENERATED BY MTR'S REPROCESSING

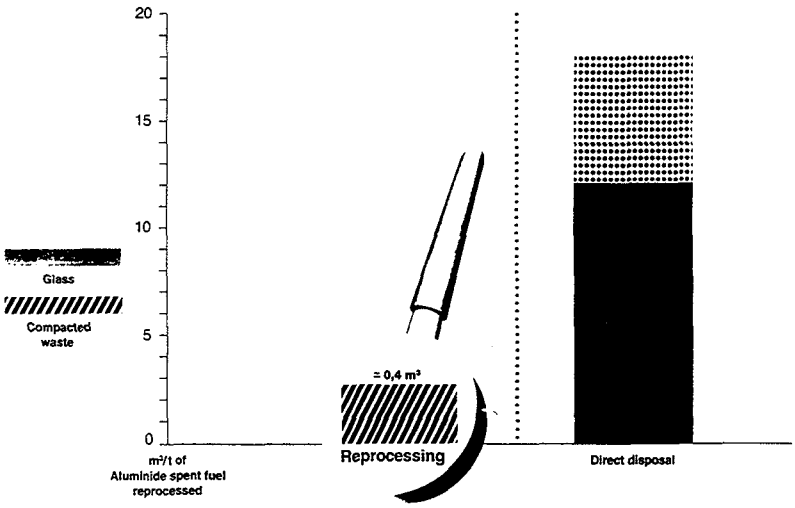

4/0227/97

REGULARLY IMPROVED SECURITY AND SAFETY RECORDS

International safeguard

La Hague facilities are under EURATOM and AIEA's control. In 1996, almost 1 700/ man/day of international inspections have been performed at La Hague thus making this facility one of the most, not to say the most, safeguarded civil nuclear place in the world.

Low environmental impact

The environmental performance is as satisfactory. Environment protection is regularly monitored by COGEMA and controlled by the French Authorities. More than 23 000 samples of water, soil, air, sand, meat and vegetables are collected annually around the La Hague plants which lead to 80 000 analysis each year.

As a result of these numerous analysis it is demonstrated that La Hague plant's environmental impact is of **0.02 mSv/man/year**

That is quite negligible as compared to the natural radiation exposure (2.4 mSv/man/year) or to the medical exposure (1.6 mSv/man/year).

As a comparison, drinking 1 litter/day of a famous French sparkling mineral water lead to 0.3 mSv/man/year or one flight Paris/New-York to a 0.02 mSv uptake.

Low radiological exposure

The occupational doses to La Hague workers are, in average, a hundred times less than those currently authorized in France and about 20 times less than natural exposure.

COGEMA COMMITMENT: A COMPREHENSIVE SERVICE FOR THE REACTOR'S LIFETIME

Through reprocessing, COGEMA offers a complete, comprehensive and integrated service to implement the final and already proven solution for the durable management of research or test reactor spent fuel.

It includes, as an overall package:

- The transport operations, the transport casks, the necessary storage periods, before and after spent fuel reprocessing, the material ultimate management and waste conditioning into internationally agreed ultimate residues.
- The sending back of the ultimate residues , as soon as technically feasible.
- Servicing the reactor for the whole of its life time.

Such comprehensive services are already under progress for Institut Laue-Langevin Grenoble RHF fuel. The first compaign with the spent fuel delivery at the reactor, its transfer to La Hague facility and its unloading has been carried out during the December 1997-January 1998 period.

As regards the SCK-CEN-Mol Belgium contract with COGEMA, delivery and transport operations are under active preparation and are scheduled to start in a near future.

WHAT SOLUTION FOR THE FUTURE ?

LEU SILICIDE: A first step substitute to HEU

As already mentioned, while reprocessing is providing the Back-End solution for HEU fuel, this is not yet available for silicide type LEU. Although COGEMA is performing R&D on that subject and, as shown by the preliminary results, the reprocessing of such fuels would necessitate to add a specific equipment on the process line, which means significant adaptative costs for a plant in operation.

LEU silicide fuel was developed in the RERTR framework to replace the HEU MTR fuels for Non Proliferation purposes. Today, it's clear that its performances are not sufficient for all MTR needs.
LEU silicide is thus to be considered as a first step substitute to HEU fuels. Further, LEU developments are underway.

THE NEXT LEU FUEL: The reactor performances and the ultimate solution for the back-end

The next new fuel generation should be:

- a LEU fuel, in agreement with the non proliferation policy of the RERTR Program,
- with higher in core performances than existing fuels,
- reprocessable in industrial plants, providing a steady back-end solution.

This new fuel should be available to the MTR's operators by 2005, to provide a steady back-end solution for Research Reactors spent fuels and avoid any gap at the end of the present US Return Policy. To offer the best service to the MTR reactors, COGEMA is involved in R&D activities and supporting the development of this next LEU fuel.
Such an achievement, in such a timescale, requires a strong support of the main actors of the MTR community.

CONCLUSION

Following a period of uncertainties, the MTR's operators benefit today of two different solutions for the management of their spent fuel:

- Enter a conversion process from HEU to LEU, to fulfil the requirement of the present US Return Policy. This will conduct them to switch to a LEU silicide fuel, having no proven back-end solution and could lead them to a dead end at the end of the US Return Policy.

- Contract for reprocessing services. At the time being, the only industrial , complete, comprehensive and integrated service, with a long term commitment, is provided by COGEMA for aluminide MTR spent fuels.

The only missing step to achieve the overall MTR fuel management and for the completion of the Non Proliferation purpose of the RERTR, is to develop the next LEU fuel as a high density LEU fuel with a reprocessing ability.

COGEMA supports this new fuel development and will conduct R&D activities to evaluate its reprocessing ability.
By offering a comprehensive and integrated back-end service for the reactor lifetime, COGEMA actually removes from reactor operators the burden of spent fuel long term management. Such a service is already available for spent fuel such as aluminide and UO_2 type.
It has to be available for the new LEU fuel presently under development. Fuel management will then become complete for all operators and will include all steps up to the final disposal.

CH0100344

PREPARATION FOR SHIPMENT OF SPENT TRIGA FUEL ELEMENTS FROM THE RESEARCH REACTOR OF THE MEDICAL UNIVERSITY OF HANNOVER

GABRIELE HAMPEL, HARRO CORDES
Department of Nuclear Medicine
Medical University of Hannover, Carl-Neuberg-Str. 1, D-30625 Hannover, Germany

and

KURT EBBINGHAUS, DIRK HAFERKAMP
NOELL-KRC, D-97064 Würzburg, Germany

ABSTRACT

In the early seventies a research reactor of type TRIGA Mark I was installed in the Department of Nuclear Medicine at the Medical University of Hannover (MHH) for the production of isotopes with short decay times for medical use. Since new production methods have been developed, the reactor has become obsolete and the MHH decided to decommission it. Probably in the second quarter of 1999 all 76 spent TRIGA fuel elements will be shipped to Idaho National Engineering and Environmental Laboratory (INEEL), USA, in one cask of type GNS 16. Due to technical reasons within the MHH a special Mobile Transfer System, which is being developed by the company Noell-KRC, will be used for reloading the fuel elements and transferring them from the reactor to the cask GNS 16. A description of the main components of this system as well as the process for transferring the fuel elements follows.

1. Introduction

A research reactor of type TRIGA Mark I was installed in the early seventies at the MHH. The reactor is located in the basement of the building which houses the Department of Nuclear Medicine.
In 1972 the approval for reactor operation was received and 71 TRIGA fuel elements with aluminum claddings were delivered by General Atomics of San Diego. Operation started in 1973 at a power level of 250 kw with 60 fuel elements in the core. In 1984 five additional fuel elements with stainless steel claddings were delivered by General Atomics. These fuel elements were installed in the core in 1991. Nevertheless a reduction of the power level began at this time. In 1993 the power level was reduced to 100 kw and since the beginning of 1997 the reactor has been in an inactive operation phase.
The TRIGA reactor has been used for the production of medical isotopes with short decay times for use in research and diagnosis in the nuclear medicine. Another application was the activation analysis in medical, biological and geological research for the detection of very small amounts of chemical elements. There were three different groups of users of the TRIGA reactor during its time of operation between 1973 and 1996: The Department of Nuclear Medicine with a share of 45 %, other MHH departments with a share of 17 % and other institutes outside the MHH with a share of 38 %.
The reasons for the decommissioning are that new methods for producing medical isotopes with a cyclotron or nuclide generator have been developed and a power level of 100 kw is not sufficient for most activation analyses. Continued reactor operation would require new fuel elements, new technical instrumentations and new instrumentations for radiation protection at high costs. This all makes no sense, because there are no applications for continued operation in the MHH. Therefore the reactor must be decommissioned within the next years and the fuel elements have to be removed as soon as possible.

2. Shipment of the spent TRIGA Fuel Elements

A total of 76 spent TRIGA fuel elements must be removed. Each fuel element consisted of a homogeneous solid mixture of uranium and zirconium hydride with 8 wt.% uranium enriched by 20 % U-235 upon receipt.
As all fuel elements were delivered by General Atomics, the MHH intends to take part in the „Research Reactor Spent Nuclear Fuel Acceptance Program" of the United States, represented by the Department of Energy (DOE). All TRIGA fuel elements (aluminum and stainless steel clad) will be delivered to INEEL probably in the second quarter of 1999. Only one transport cask of type GNS 16 is required to ship the 76 fuel elements.
The shipment will be carried out by truck from the MHH to the German port of Bremerhaven, by vessel to Charleston Naval Weapons Station, South Carolina, USA, and by train or truck to INEEL. The title to all fuel elements shall vest in the United States upon arrival on United States soil at Charleston.

3. Preparation and Technical Requirements for the Shipment

Due to technical reasons (e.g. the transport cask GNS 16 weighs about 15 t, but the maximum floor weight capacity in the radiological building is only 2 t / m^2) and the location of the reactor within the radiological building, it is not possible to place the cask inside the reactor facility. Therefore a temporary building with an area of about 15 m x 4.5 m and a height of about 9.5 m will be erected next to the radiological building to house the cask GNS 16.
The building will also be used to handle the waste from dismantling the reactor for transport.

For the transfer of the fuel elements from the reactor to the transport cask a special Mobile Transfer System, which is being developed by the company Noell-KRC, will be used. The main components of this Mobile Transfer System are

- Loading Units for 6 (5) fuel elements
- Special Transfer Cask
- Transfer Vehicle
- Mobile Reloading Facility for the Loading Units
- Air Cushion Gliding Track

This Mobile Transfer System is being developed especially for use at the TRIGA reactor of the MHH. With only small changes to the equipment it can also be used for the removal of spent fuel elements from similar reactor facilities.

The fuel elements will be loaded from the reactor tank into one of the storage pits. From this pit they will be drawn into the Special Transfer Cask, which will be set on a Transfer Vehicle using a hoisting device. The Transfer Vehicle together with the Special Transfer Cask will be moved through the reactor area to the temporary building.
In detail the transfer process of the fuel elements at the MHH includes the following steps:

- **Preparation of one storage pit**
  A Loading Unit, which has been especially developed to accommodate TRIGA fuel elements, is placed in the storage pit. Two different kinds of Loading Units are being developed: One type with loading channels for 6 and the other for 5 fuel elements. The Loading Unit for 5 fuel elements will be used for fuel elements which are not completely straight.

- **Reloading of fuel elements from the reactor tank into the Loading Unit (see fig. 1)**
  One fuel element is loaded from the reactor tank into the Loading Unit in the storage pit using the MHH flask, which is part of the normal equipment for operation. This process is repeated until the Loading Unit is filled.

- **Loading the Special Transfer Cask with Loading Units**
  The Special Transfer Cask is set on the storage pit and the full Loading Unit is drawn into this cask.

- **Preparation of the Special Transfer Cask for Transfer within the MHH**
  Since the fuel elements are wet, the Loading Unit inside the Special Transfer Cask is air-dried. After that the Special Transfer Cask is hoisted onto the Transfer Vehicle and tied down by safety belts. A protective hood is placed over the cask. Then a propelling apparatus is coupled to the transfer vehicle.

- **Transfer from the reactor facility to the temporary building**
  The Transfer Vehicle is moved by the propelling apparatus through the reactor area to the elevator, which lifts the vehicle one meter up to the level of the basement floor. From here the Transfer Vehicle is moved about 80 m along the corridors to the temporary building.
  The transport cask will be brought to the temporary building in a 20-ft-container by a truck. Then it will be removed from the container by a mobile crane and moved along the Air Cushion Gliding Track into the temporary building. There it will be equipped with a special Mobile Reloading Facility.

- **Movement of the Loading Unit from the Special Transfer Cask into the transport cask GNS 16 (see fig. 2)**
  First the lid of the cask GNS 16 is removed by the lifting device, while the shutter of the radiation protection device is open. Then the lid lifting device is removed and the Special Transfer Cask is set on the radiation protection device. With the shutters open, the Loading Unit is placed in the basket of the cask GNS 16. When the process is completed, the shutters are closed and the Special Transfer Cask is returned on the Transfer Vehicle to the reactor area for the next Loading Unit. When all Loading Units have been set in, the transfer cask the lid is replaced. Finally the cask will undergo the necessary tests and checks for shipment.

- **Transfer Route on MHH grounds**
  The cask GNS 16 will be moved outside the temporary building by means of the Air Cushion Gliding Track. From here it will be placed by the mobile crane on the 20-ft-container. The cask will be transported from the MHH to the port at Bremerhaven by truck.

The transfer process described above offers maximum safety at all times. Potential load drop has been taken into acount by specific provisions and design features in keeping with the German safety regulations.

5. Schedule for decommissioning the TRIGA reactor of MHH

The whole decommissioning will take place according to the following schedule:
The reactor was finally shut down in January 1997. The approval for the transfer of the fuel elements from the reactor core into the transport cask is expected to be received by the end of 1998. The transfer of the fuel elements will be carried out in the first quarter of 1999. The shipment of the fuel elements to the United States is intended for the second quarter of 1999. Directly after this the dismantling of the reactor will begin. The reactor facility will be released from the provisions of the German Atomic Law in the second half of 2000. After this the MHH will start with the preparations for converting the reactor facilities for new applications.

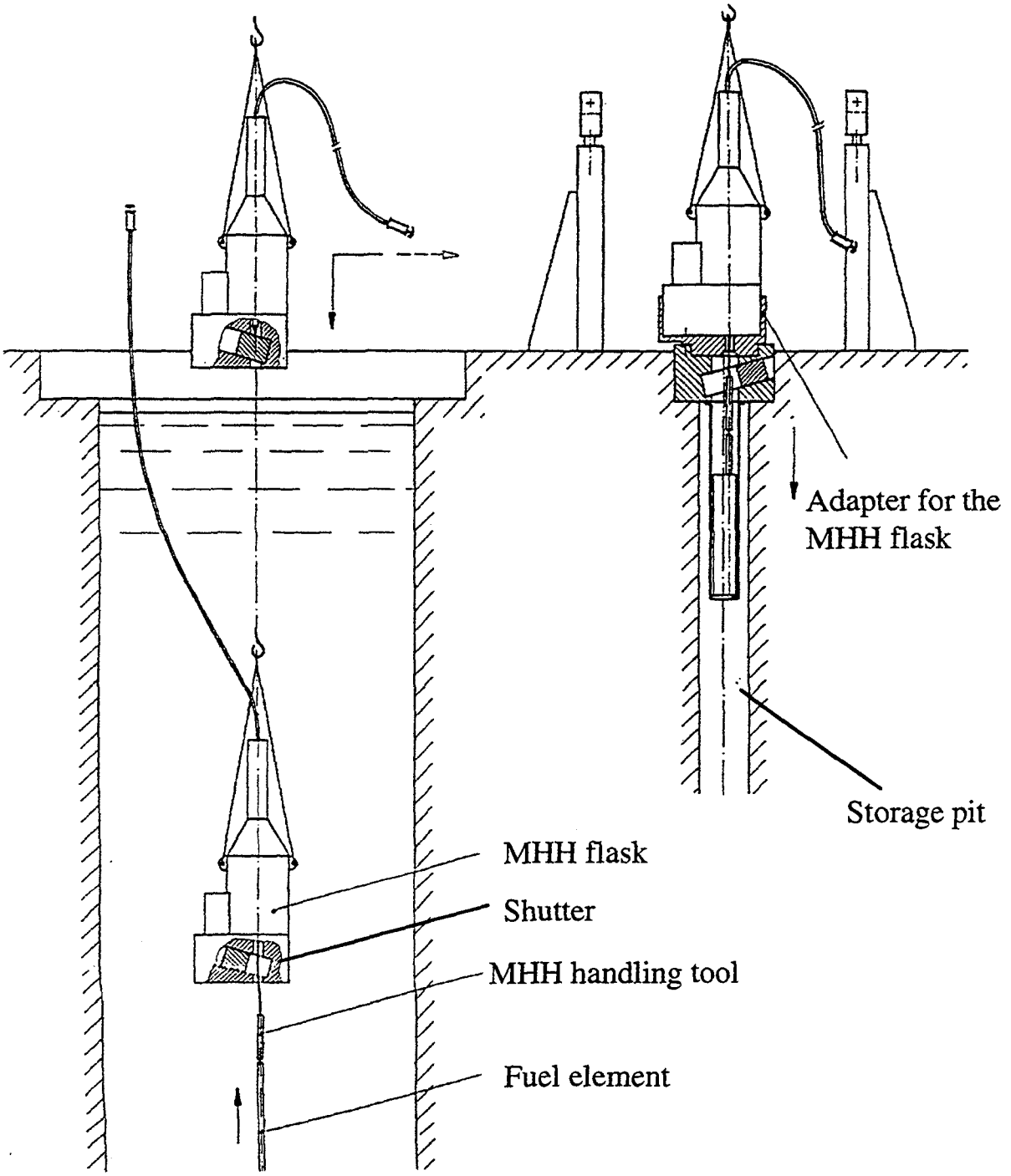

Fig.1 Removal of Elements from the Reactor Tank

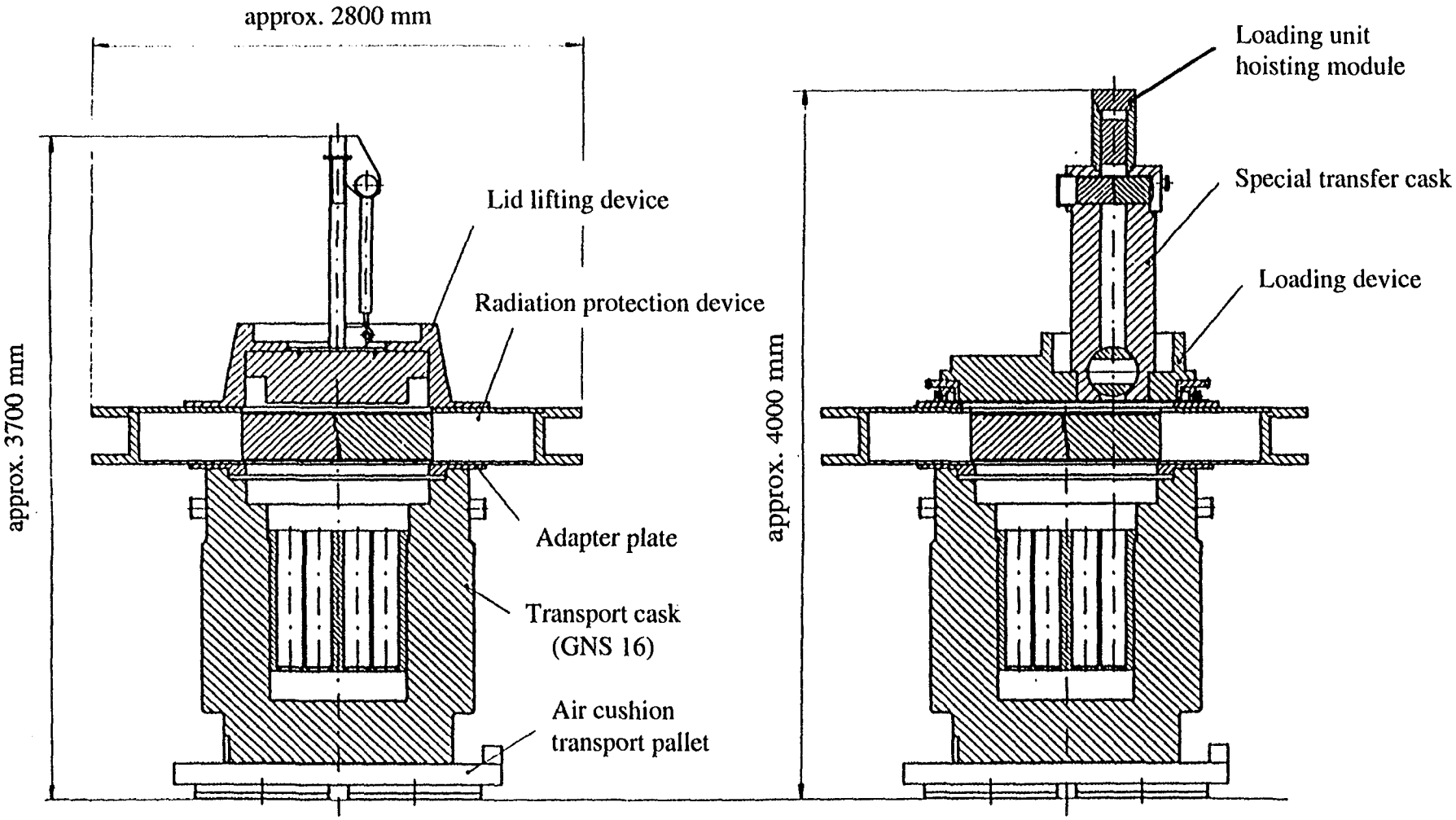

Fig.2 Mobile Reloading Facility for Noell - KRC Loading Units

CH0100345

CURRENT ACTIVITIES ON IMPROVING STORAGE CONDITIONS OF THE RESEARCH REACTOR RA SPENT FUEL - PART II

M. V. MATAUŠEK, M. KOPEČNI, Z. VUKADIN, I. PLEĆAŠ, R. PAVLOVIĆ, O. ŠOTIĆ, N. MARINKOVIĆ
VINČA Institute of Nuclear Sciences, 11 001 Belgrade, Yugoslavia

ABSTRACT

To minimize further corrosion and preserve integrity of aluminum barrels and the stainless steel channel-type containers, which were found to contain leaking spent fuel, actions to improve conditions in the existing spent fuel storage pool at the RA research reactor were initiated. Technology was elaborated and equipment was produced and applied for removal of sludge and other debris from the bottom of the pool, filtration of the pool water, sludge conditioning in cement matrix and disposal at the low and medium waste repository at VINČA site. More sophisticated operations are to be performed together with foreign experts. Safety measures and precautions were determined. Subcriticality was proved under normal and/or possible abnormal conditions.

1. Introduction

Activities and results related to identification of the actual state of the research reactor RA spent fuel were reported in the previous paper [1]. It was found that the integrity of the first safety barrier, the spent fuel cladding, was probably lost. The original tubular stainless steel spent fuel containers, as well as the aluminum barrels introduced thereafter, then represent this first safety barrier. In order to preserve their integrity, i. e. to minimize their further corrosion, the quality of the pool water, previously neglected because it was not supposed to be in direct contact with the fuel cladding, had to be improved. It was concluded that immediate actions are needed to clean the pool from all the debris accumulated there during the time when the pool was unattended, to purify the pool water and to introduce a system for monitoring and maintaining the optimal water parameters on a permanent basis.

Following the recommendations obtained from IAEA [2], the VINČA Institute elaborated a project incorporating the following steps: preliminary removal of sludge and other debris from the bottom of the pool, washing of deposits from all the surfaces in contact with the pool water, venting of the aluminum barrels, mechanical filtration of the pool water, final removal of the sludge, sludge conditioning and disposal at the low and medium waste repository at the VINČA site, installation of a system for continuous purification of the pool water. As soon as initial financing was provided by the Yugoslav Government, VINČA started preliminary cleaning of the RA reactor spent fuel storage pool, while the Institute of Power Engineering ENTEC in Moscow was asked to provide the detailed offer for other services.

The present paper reports the results achieved so far, on preliminary removal of sludge from the bottom of the pool, mechanical filtration of the pool water and sludge conditioning and disposal. These actions, performed by the Institute stuff and using the locally available equipment, are considered as preparatory and complementary activities to the subsequent, more sophisticated operations, which are to be performed in cooperation with foreign experts.

2. Cleaning the sludge from the bottom of the spent fuel storage pool

The RA reactor spent fuel storage pool consists of four basins connected mutually and with the reactor body by two transport channels. Each basin has a door, which can block, but not completely prevent mixing of water. To perform preliminary removal of sludge from the bottom of a particular basin,

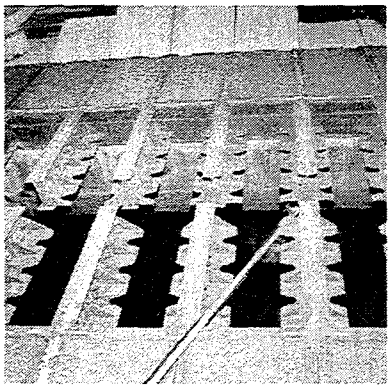

Fig. 1. Empty original holders of spent fuel containers

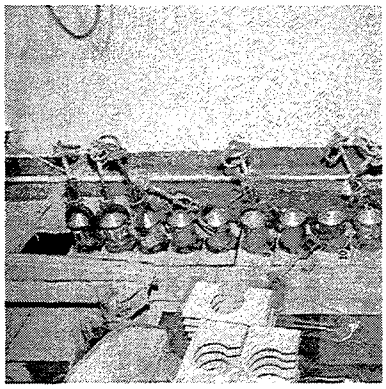

Fig. 2. Containers in transport channel along the basins

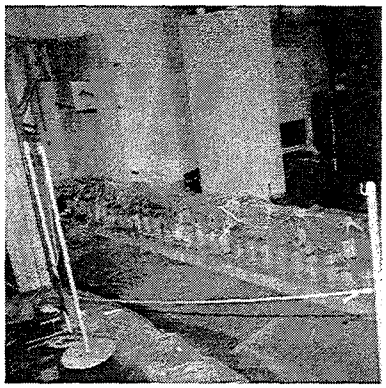

Fig. 3. Containers in transport channel in the reactor hall

channel type spent fuel containers are removed from their original holders, Fig. 1, and temporarily hang on the newly produced holders placed along the transport channels, Figs. 2-3. The bottom of an empty basin can then be examined using a special underwater camera and an underwater reflector produced for the purpose. It was found that 10-20 cm thick sludge layer also hides a lot of other debris, like pieces of corroded rods, wire, plastic foil and glass, Figs. 4-9.The underwater camera appeared to be an indispensable part of the working equipment.

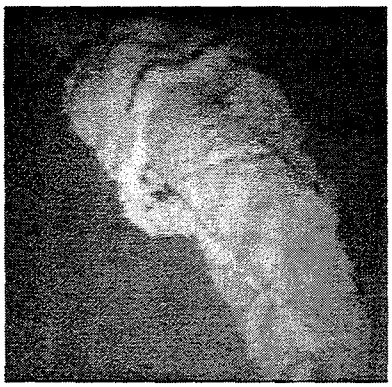

Fig. 4. A piece of a corroded rod at the bottom of the basin

Fig. 5. A piece of a wire at the bottom of the basin

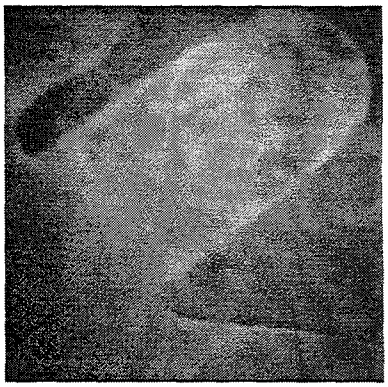

Fig.6. A lost plastic glove at the bottom of the basin

Water carrying the sludge from the bottom of the treated basin can be pumped into the sedimentation vessel by different pumps, with aspiration parts adapted so to enable work in basin regions difficult to reach. For the loose sludge, an immersion pump is most convenient To begin with, the low capacity pump already in use at the RA reactor spent fuel storage pool was applied, Fig. 7. In the mean time, a new, more powerful FLYGT pump (flow rate 6-16 m^3/h, water pressure 10-15 m) was purchased. To collect smaller pieces of different kinds of debris, a special RONDO pump is used. A vacuum tank, which is an integral part of this kind of a pump, is adjusted so to play the role of a garbage can, which can be opened and emptied when it is filled up. The intake pipe of this pump is 7.5 m long and has inner diameter of 5 cm, Fig. 8. A special grip is applied to collect even bigger pieces of debris, Fig. 9.

For the first phase of pool cleaning, a 2.5 m^3 vessel was produced for separating the sludge from water by simple settling, Fig. 10. It has an inflow pipe at the top, a valve at the bottom for releasing the sediment, three more valves at different levels for the separated water to be returned to the pool and a

Fig. 7. Immersion pump with special lights

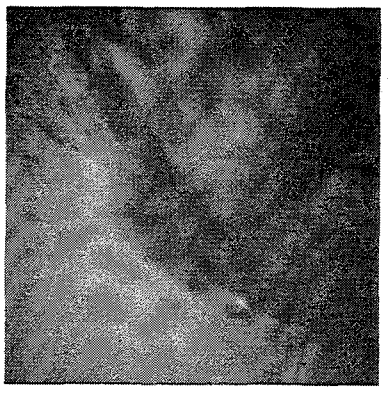

Fig. 8. Aspiration part of RONDO pump

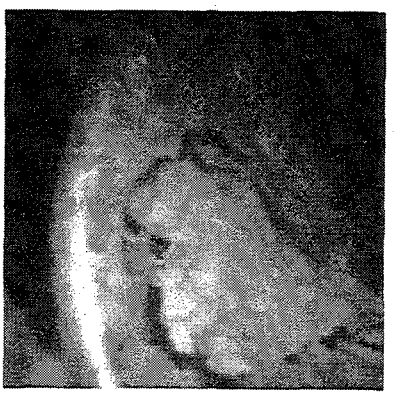

Fig. 9. A grip for collecting larger pieces of debris

safety pipe near the top for circulating water back to the pool in case of an overflow. The vessel is equipped with windows for monitoring the sedimentation process and with an adjustable level meter with a sound alarm. It is placed aside the spent fuel storage pool into an appropriate tray, where accidentally spilled contaminated material would be collected and returned to the storage pool through the pipe connected to the hole on the bottom of the tray. The 1.5 m high legs make it possible for the forklift carrying the cask for sludge removal to come under the lower valve of the vessel. In the second phase of pool cleaning, the vessel for mechanical separation of sludge will be equipped with an easily exchangeable filter for mechanical purification of the pool water.

Pumping of water with the sludge from a particular basin is performed until the sedimentation vessel is filled. After a certain period of settling, the separated water is returned into another basin, while the sludge is poured into a special cask designed and produced for sludge transport, conditioning and storage. As soon as this cask is filled up to a certain level, it is properly closed and removed from the RA reactor building for conditioning and storage. When sludge from the bottom of a particular basin is removed, channel type spent fuel containers are transferred back to their original place. The same operation is then repeated for the next basin. After washing off the deposits from all the surfaces in the pool, removing the heavily corroded iron rig structure, and after venting and resealing of the aluminum barrels with spent fuel and their replacement in the pool (operations to be performed according to the procedure developed and provided by ENTEC), final removal of the sludge from the bottom of the spent fuel storage pool will have to be performed by repeating the above explained procedure.

3. Sludge conditioning and storage

Total quantity of sludge on the bottom of the RA research reactor spent fuel storage pool is estimated to be about 3 m^3. Gamma spectrometry analysis showed that the concentration of activity in the sludge is about 1.3 kBq/ml ^{137}Cs and about 15 Bq/ml ^{60}Co. Based on the previous experience [3], a technology was developed for sludge conditioning in a cement matrix, inside casks produced using the standard 200-liter metal barrels which have lids supplied by screws, Fig.11. The existing pilot cement mixer was reconstructed to enable placing a barrel containing the planned quantity of sludge on its platform without a risk of spilling. A new mechanical manipulator, which provides mixing of the cement matrix with the sludge in the entire volume of the barrel, was constructed. A room with a ventilation system, for conditioning the sludge with the cement matrix and for storing the casks during the period needed for cement hardening, was arranged, Fig. 12.

About 60 liters of sludge are poured at a time from the sedimentation vessel into a previously prepared cask. As soon as a cask is filled up, it is transported to the laboratory for sludge conditioning. There, additional settling of sludge is allowed. Separated water is pumped into a plastic can and taken back to the RA reactor spent fuel storage pool.

Fig. 10. The vessel for separating sludge from water

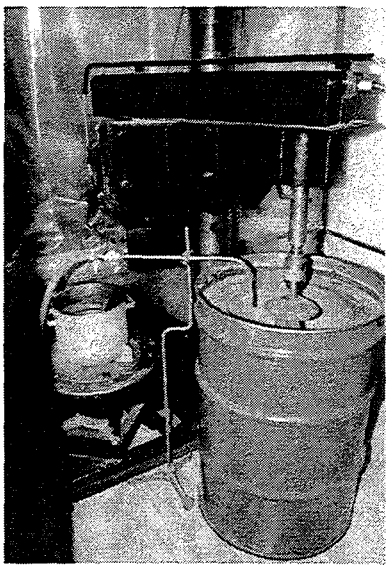

Fig. 11. Sludge conditioning in 200-liter metal barrels

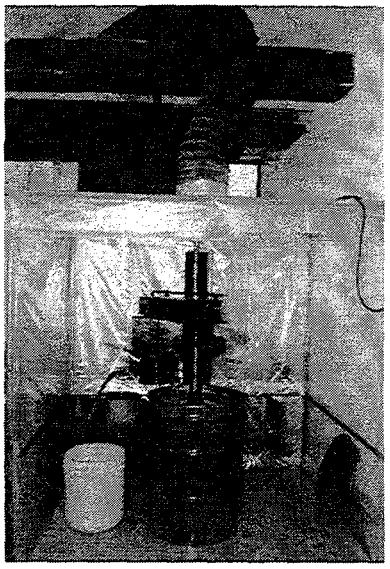

Fig. 12. A room for conditioning the sludge

When the cask with the settled sludge is placed on the platform of the mixer for further conditioning, the necessary amount of cement (PC-45 Mpa), sand (0 - 2 mm) and additives, according to the established formula of cement matrix and the cement-sludge ratio, are poured into the cask. Mechanical manipulator will then mix this mixture until a homogeneous substance is obtained. This technology for sludge conditioning eliminates all the risks related to pouring the sludge into the concrete mixer and pouring the cement-sludge mixture into the metal barrel. The barrel with the homogenized mixture is removed from the mixer platform and placed in a separate room for cement to harden. The time needed for cement hardening is about 48 h.

Taking into account the measured radioactivity of the sludge and the conditioning technology, it is estimated that a cask containing conditioned sludge will hold about 110 MBq ^{137}Cs and about 1.3 MBq ^{60}Co, i.e. concentration of the conditioned radioactive waste will be about 0.6 GBq/m^3 ^{137}Cs and about 45 MBq/m^3 ^{60}Co. Taking into account the effect of self-absorption in homogeneously dispersed radioisotopes in the cement matrix, the contact dose on the cask should be much less than 2 mSv/h, which is an acceptable value. Since dissipation of power will be far beneath 2 kW/m^3 and the concentration of long lived α emitters can be practically neglected, conditioned sludge can be classified as low or medium radioactive waste and disposed at the existing waste repository at VINČA site. The rate of the sludge conditioning follows the progression of cleaning the sludge from the bottom of the spent fuel storage pool. It is estimated that the total amount of sludge will be conditioned in about 40 barrels.

4. Safety measures and precautions

Overall safety measures during the remedial actions at the RA reactor spent fuel storage pool are based on legal documents and recommendations of IAEA, related Yugoslav laws, documents of the reactor and the fuel supplier from former USSR, internal regulations of VINČA Institute and RA reactor which deal with safety problems and issues. Besides, special safety measures, related to all of the actions planned, are elaborated and safety procedures and precautions are determined.

Quantity and contents of fissile material in the spent fuel storage pool are such that the possibility of criticality accident can not be *a priori* excluded. According to standards and regulations for handling fissile material outside a reactor, using the previously developed and verified methodology [4], criticality safety calculations were performed and subcriticality was proven under normal, as well as under possible abnormal conditions, Table 1.

Table 1. k_{eff} for particular basins and different kinds of upper reflector.

Description of the basins		Upper reflector			
		Air		Water	
Basin 1: 63 x 11 fresh fuel elements initial enrichment 80%		.113841		.125415	
Basin 2: 104 x 11 elements initial enrichment 2%, average burnup 44%		.095374		.106034	
Basin 3: 104 x 11 elements initial enrichment 2%, average burnup 50%		.088477		.096183	
Basin 4: 36 x 11 elements initial enrichment 2%, average burnup 54%		transport channel		transport channel	
		water	fresh fuel	water	fresh fuel
Annex containing spent fuel with initial enrichment 2%,	No Cd	.948722	.951648	.942085	.946011
layer 1: 3125 elements in 19 barrels, average burnup 29%	With Cd	.597680	.602849	.592212	.596212
layer 2: 1805 elements in 11 barrels, average burnup 43%	Cd at the bottom	.889593	.893913	.882470	.886090

In safety assessment of the technological route for cleaning the spent fuel storage pool, possibilities of different accidents (e.g., pipe breaking or turn over of the barrel before closing and spilling or splashing of radioactive materials), were analysed. Radiation safety and protection measures for the personnel taking part in all the procedures, during the normal activities, as well as during the possible accidental conditions, were specified. Radiation control and decontamination procedures were elaborated. To prevent spreading possible contamination, temporary sanitary corridors for permanent control of contamination and exposures of the staff involved in the procedures were installed at RA reactor in the vicinity of the spent fuel storage pool and in the sludge conditioning laboratory in the vicinity of the sludge mixer.

All operations performed to improve the research reactor RA spent fuel storage are properly recorded by making protocols, drawings, blueprints, photographs and videotapes.

5. Conclusions

Cleaning the research reactor RA spent fuel storage pool appeared to be a more difficult, more time consuming and certainly more expensive operation than originally estimated. However, the results achieved so far are a sound basis to conclude that the task shall be accomplished successfully. While performing the operations explained above, necessary elements for planning further treatment of the spent fuel should be obtained.

6. Acknowledgments

Complicated operations of cleaning the spent fuel storage pool, as well as radioactive waste conditioning and storage, could not be performed without extraordinary skills and efforts of the RA Reactor and the Radiation Protection Laboratory personnel:

7. References

1. Mataušek, Z. Vukadin, R. Pavlović, N. Marinković, Trans. Int. Conf. Research Reactor Fuel Management (RRFM'97), Bruges, Belgium, 1997, p.115.
2. Litai, Travel Report: IAEA Expert mission to prepare detailed plans for priority remedial action related to the spent fuel pool at the RA reactor at VINČA Institute, 17-21 February 1997.
3. Plećaš, Radioactive Waste Management in FR Yugoslavia, Proc. Int. Conf. on Future Nuclear Systems (GLOBAL'97), Yokohama, Japan, 1997, p. 404.
4. Mataušek, N. Marinković, Applicability of Reactor Code WIMS for Nuclear Criticality Safety Studies, Transactions of ANS, 1995, Vol. 73, p. 223.

CH0100346

NEW DEVELOPMENTS IN TRANSPORTATION FOR RESEARCH REACTORS

J-L. MONDANEL
Transnucléaire - Head of Transport Department
9-11 Rue Christophe Colomb - 75008 PARIS - FRANCE

ABSTRACT

For more than 30 years, Transnucléaire has been performing safely a large number of national and international transports of radioactive material. Transnucléaire has also designed and supplied numerous packagings for all types of nuclear fuel cycle radioactive materials : for front-end and back-end products and for power and research reactors.

Since the last meeting held in Bruges, Transnucléaire has been continuously involved in transportation activities for fresh and irradiated materials for research reactors. We are pleased to take the opportunity in this meeting to share with reactor operators, official bodies and other partners, the on-going developments in transportation and associated services. Special attention will be paid to the starting of transports of MTR spent fuel elements to the La Hague reprocessing plant where COGEMA offers reprocessing services on a long-term basis to reactors operators.

Detailed information will be provided on regulatory issues which may affect transport activities : evolution of the regulations, real experiences of recent transportation and development of new packaging designs. Options and solutions will be proposed by Transnucléaire to improve the situation for continuation of national and international transports at an acceptable price whilst maintaining an ultimate level of safety.

1. Introduction

As you probably all know, Transnucleaire is a wholly-owned subsidiary of the COGEMA group, one of the worlds leading groups in fuel cycle management. For the last 30 years, the expertise of our company, and its affiliated companies in the US, Japan, Spain, Belgium, United Kingdom and Germany, and specifically related to design, procurement and operation of appropriate casks and equipment, and also related to the transport of radioactive material on a world-wide basis, has provided each of our customers with door to door transport management.

Transportation of fresh fuel for power reactors and spent fuel from those reactors is carried out on an industrial basis by Transnucléaire. Concerning transports for research reactors, each shipment is a permanent challenge and requires a reactive organisation in order to deal with all transportation issues.

2. Current issues on MTR spent fuel transports

According to the IAEA, there are about 600 research reactors in more than 70 countries and spread over the five continents. The transportation of MTR and TRIGA spent fuel (metal or oxide fuel elements) is subject to the same regulations regarding safety and security as is transportation of Light Water Reactor spent fuel. This means that intensive preparation work, in close-co-operation with customers, partners, associates and transport subcontractors is necessary to provide and optimise all corresponding services in full compliance with applicable regulations and customers requirements.

Hence, we will study current transport regulations and the experience of Transnucléaire in such transportation, and also the global service, through real cases. Finally, we will pay attention to the development of a new cask, the TN-MTR, which is our solution for the research reactors spent fuel transportation for the next years.

3. Transport regulations

- Like any radioactive material, the transport of MTR materials is regulated by the Safety Series N°6 of the IAEA regulations, which are generally incorporated into national and international regulations such as those of the International Maritime Organisation (IMO) and of the International Civil Aviation Organisation (ICAO). The basic principle of these regulations is that safety is vested in the package design, permitting the transport by all conventional modes (road, rail air and sea).
  However the IMO's INF Code lays down stringent requirements for Irradiated Nuclear Fuel, Plutonium and High Level radioactive Waste shipping, through three classes. In each of these three classes, different specifications are imposed in order to meet several requirements on ship stability after damage, fire-fighting capability, temperature of cargo spaces, structural resistance, cargo securing arrangements, redundancy of electrical supplies, radiological protection equipment, management, training and shipboard emergency plans.
  Transnucléaire is presently operating two INF 2 certified ships, the Beaulieu and the Bouguenais, under an exclusive contract with a French ship company.

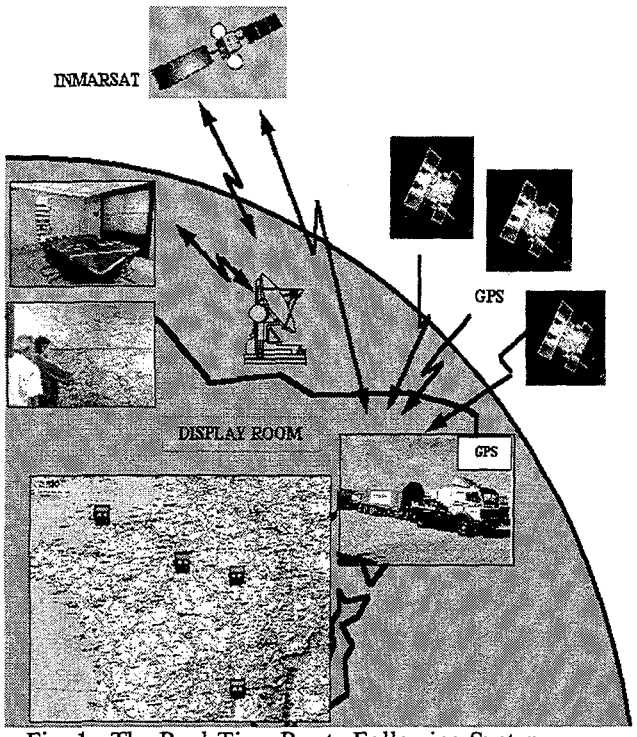

Fig. 1 : The Real-Time Route Following System

- Moreover, since last summer, a real-time transport route following system, using the Navstar / GPS satellites constellation, the INMARSAT communications satellite and a mapping display system, provides essential data to our company on the ships, train and trucks positions. It also provides an average speed of these transports. This means that 24 hours a day, we are able to know the exact positions of all our nuclear transports all over the word, including for MTR. It is easy to understand how much this is important, especially in a crisis case. This allows us to obtain real information on such a case, and to take the right decisions, through our Transport Emergency Plan.

- Concerning air transport regulations, the IAEA has decided that in the near future, a new category of packages, known as Type C packages, will be required for high activity material. These packages must be designed to withstand more severe series of tests than the existing type B packages. Additional subcritical conditions are imposed for all packages containing fissile material, as for Highly Enriched Uranium products (metal, oxide, fresh fuel elements, spent fuel elements) as used in research reactors.

In order to control the transportation line, Transnucléaire has decided to establish a close partnership with a specialised air freight company, AOS (Air Open Sky), which will be able to perform air transport of fresh MTR, Highly Enriched Uranium and any other nuclear material.

4. Transnucleaire's main spent fuel transport operations

The key fact concerning the Transnucléaire transport operations is that we propose a global service. This includes transport but also transfer, fuel analysis by our engineers, and global management, from technical (cask, transport and personnel) to legal aspects. Let me remind you of some of the MTR transports in which Transnucléaire is currently involved, all over the world.

To the La Hague reprocessing plant :

- From BR2 reactor at Mol (Belgium) : 8 transports using the IU-04 (« Pegase ») cask are planned in 1998.
- From ILL - Grenoble (France) : 4 transports of RHF fuel, using TN-7.2 cask are planned in 1998 following the first transport performed in last December 1997.
- We also plan various other transports of research reactor spent fuel, from French universities and for the CEA.

To the Savannah River site :
Since the resumption of radioactive materials transports to the US, Transnucléaire has been involved in several spent fuel transport operations to US harbours :

- In 1994, one transport, using two chartered INF 1 ships. Two IU-04 casks were coming from Denmark (Risö reactor) and Austria (Astra reactor).
- In 1995, one transport from Cherbourg and the Greek (Demokritos reactor) was performed on our Bouguenais INF 2 ship.
- In September 1996: one transport was performed with our Beaulieu INF 2 ship. Two IU 04 casks were coming from the PTB reactor, in Germany.
- In April 1997 : one transport, with the Bouguenais ship, of a total of three IU 04 casks, via Cherbourg (ENEA spent fuel from Italy) and via Scrabster-U.K (spent fuel from Dounreay, for the account of CIEMAT Spain).
- In January 1998 : one transport of four IU-04 casks, with the Bouguenais. The ship made a long trip from Cherbourg (ENEA spent fuel from Italy), to Sweden (R2 reactor fuel from Studsvik), Denmark (DR3 in Risö and HMI reactor - Germany) and finally, to Greece (Demokritos reactor), before crossing the Atlantic ocean to Charleston harbour.
- This summer : One transport is planned with our American partner, Edlow. Together, as part of the « Edlow team », we will transport two IU-04 casks, from IVIC reactor (Caracas - Venezuela) to Savannah River.

This last transport is a good example of the door to door service we can provide. Because of the layout of the Venezuelan reactor, we had to conceive an original element unloading/ cask loading system. We will use a special heightening skirt on top of each of our IU-04 casks. Then, we will fill up the two elements (cask and skirt) with water. The fuel elements of IVIC research reactor will first be loaded one by one in a bell-shaped item which will then be transferred and submerged in the heightening skirt. There, a pre-loading cell will receive each fuel elements in turn. In a second operation each element will be transferred from the pre-loading cell to an empty cask basket lodgement. All these devices and operations will be designed and performed by Transnucléaire engineers and technicians.

5. The TN-MTR solution for research reactors materials transports

For the future, we have decided to invest more in the research reactor transportation. A new generation of cask, the TN-MTR, will be available.
The TN-MTR is a type B (U) F packaging, according to the IAEA regulation, specially designed for the transport of irradiated MTR and Triga fuels. It will replace the IU-04 « Pegase », which has been in service for 30 years. It will be able to transport MTR fuels in any country.
In particular, it could be used for transport of MTR fuels from research reactors to the United States or to a reprocessing plant. To minimise the number of these transports, Transnucléaire, and its American subsidiary, Transnuclear Inc. have developed high capacity baskets for up to 76 MTR elements, that are adequate for a large variety of MTR and Triga fuels.
The TN-MTR will be available in 1999. Its licensing is in progress in France. The certificate of approval is expected in May 1998 in France. We also plan to send applications for validations in the United States, Belgium, Sweden, Italy, United Kingdom, Denmark, the Netherlands, Eastern and Far East countries.
As use of this packaging must be possible in a large varieety of facilities, it has been especially designed to be easily handled. Its operation does not require elaborate equipment.

Packaging design :
The packaging consists of 3 components : the body, the lid and the impact limiter.
Body : cylindrical cavity surrounded by 4 layers (stainless steel (2), lead (1), insulation (1))
Lid : 3 discs (stainless steel (2), lead (1 in the middle))
Impact limiter : wood + stainless steel sheets
The weight of these three components is 20 600 kg. The maximum allowable mass in transport is 23 400 kg, including all contents materials.
The TN-MTR has a single impact limiter on the top end, so that the bottom end is free. Thus, it can be transported vertically.

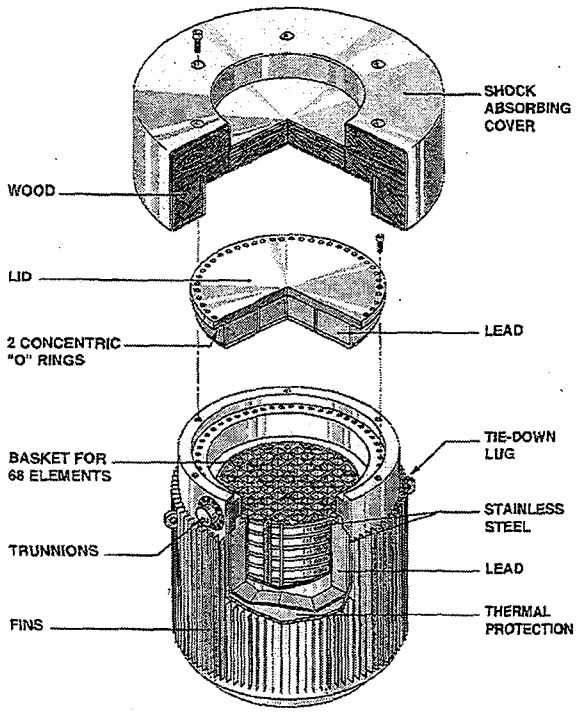

Fig. 2 : The TN-MTR cask

The packaging is equipped with two orifices that are sufficient to perform every required operation (water filling and draining, air injection and vacuum). In order to improve the safety of the packaging, both orifices are installed on the lid and hence are protected by the impact limiter during transport. Hence no orifice on the cask is directly damageable under the conditions of a punch test.
The lead shielding of the cask body is surrounded by a thermal insulation layer, to ensure that it will not melt in case of fire (regulatory thermal test conditions).

TN-MTR operations

The TN-MTR is easy to handle by means of two trunnions, which are bolted onto the packaging body. Handling operations require no tilting. The trunnions are protected by the impact limiter in case of the regulatory lateral drop. They can be used with the impact limiter fitted. Each component (lid, impact limiter...) of the packaging that has to be removed during cask loading operations, can be lifted either by handling beam or lifting eyes, so these removal operations are simple to perform.
The loading and unloading operations can be performed in either dry or wet conditions. During transport, the cavity is under a slight vacuum.

Drop testing

The regulatory drop test program was devised to be representative of the worst drop condition. It was presented to the French authorities before testing. It resulted in a drop test program, including five 9 meter drops (two lateral, two end drops and one corner drop), and two punch tests (one on the body, one on the lid).

The test series was carried out in March and April 1997. The drop sequence demonstrated that only local deformations are caused on the cask and that leaktighness of the TN-MTR packaging is preserved under accident conditions. It must be noted that these results were obtained after a drop sequence more severe than the IAEA requirements. Furthermore, it demonstrated that the mechanical integrity of the basket is conserved under these conservative conditions.

As you see, the TN-MTR packaging has been developed in a spirit of full safety and efficiency, taking advantage of wide operational experience gained with the IU-O4 « Pegase » cask. In particular, the criticality analysis takes into account the tolerances of the plates and hypothetical deformations of the fuels. This is the reason we think it is the best reply for various MTR and Triga material transportation needs, tomorrow and in coming years.
For small quantities of MTR materials, another new generation of cask, the TN 106, will replace the TN 6.2.

6. Conclusion

As you are able to see, Transnucléaire and its partners have demonstrated, through long experience in nuclear transports, including for research reactors, their capacity to perform diverse and complex MTR and Triga transports all over the world, through global management, from a technical but also from a legal point of view. This entails :

- fuel analysis,
- loading and unloading technical assistance,
- development of a new generation of casks,
- development of dedicated transports means (ships, road, rail and air),
- real-time route following system using satellites and crisis team,
- development of dedicated technical equipment for transfer and transport.

Posters

CH0100347

MLR REACTOR

E.P.RYAZANTSEV, P.M. EGORENKOV, V.A.NASONOV, A.M.SMIRNOV, A.V.TALIEV

Reactor Technology and Materials Research Institute,
RRC "Kurchatov Institute",
Kurchatov sq. 1, 123182 Moscow - Russia

and

B.F.GROMOV, V.V.KOUSIN, M.N.LANTSOV, V.P.RADCHENKO, V.N.SHARAPOV

SSC of RE - Institute of Physics and Power Engineering,
249020 Obninsk - Russia

ABSTRACT

The Material Testing Loop Reactor (MLR) development was commenced in 1991 with the aim of updating and widening Russia's experimental base to validate the selected directions of further progress of nuclear power industry in Russia and to enhance its reliability and safety. The MLR reactor is the pool-type one. As coolant it applies light water and as side reflector beryllium. The direction of water circulation in the core is upward. The core comprises 30 FA arranged as hexagonal lattice with the 90-95 mm pitch. In the core sited are the central materials channel and six loop channels. The reflector included up to 11 loop channels. The reactor power - 100 MW. The average power dencity of the core is 0.4 MW/l, maximal - 1.0 MW/l. Maximum neutron flux density in the core (E>0.1 MeV) - $7 \bullet 10^{14}$ n/cm^{2}s, in the reflector (E<0.625 eV) - $5 \bullet 10^{14}$ n/cm^{2}s. In 1995, due to the lack of funding the MLR designing was suspended.

1. Introduction

In the former Soviet Union the 10 MW RPT reactor, started up in 1952 at the Atomic Energy Institute (now RRC "Kurchatov Institute"), modernized in 1958 with the increase of its power up to 20 MW, has ensured up to 1962 loop tests of fuel elements (FE) and fuel assemblies (FA) and diverse fuel and structural materials. The MR 20 MW materials testing multiloop reactor was commissioned in 1963 at the RRC "KI" (to replace the RPT reactor). It was modernized in 1967-1970 with the increase of its power up to 40 MW. The MR reactor and reactors, constructed at the RIAR (Dimitrovgrad): the SM-2 50 MW tank type reactor started up in 1961 and modernized in 1965 with the increase of its power up to 75 MW and in 1974 up to 100 MW, and the MIR 100 MW materials testing multiloop reactor started up in 1966, for the last 30 years were the basis of the experimental base for radiation testing of FE and materials in the frames of research programs for creating and development of nuclear power industry in Russia.

Due to ageing of the main experimental base in Russia the Ministry of Atomic energy and industry in 1990 has taken the decision on its updating and further progress. In connection with this decision in 1991, RRC "KI" and SSC-RF-IPPE developed Technical Requirements for the new 100 MW Materials Testing Loop Reactor (MLR) project design - using light water as moderator and coolant and beryllium as side reflector. The MLR construction at the existing IPPE site located near Obninsk was planned to be completed by the year 2000.

Based on these Technical Requirements, the Experimental and Design Bureau (OKBM) with the participation of RRC "KI" and SSC-RF-IPPE have first developed Technical Proposal to follow up in 1994 with the Preliminary Conceptual design of MLR. In 1995 due to the lack of funding the MLR designing was suspended.

2. Purpose of the reactor

The MLR reactor will considerably widen the possiblities for radiation testing of fuel elements and materials with the aim of obtaining the necessary data to validate the selected directions of development of nuclear power industry in Russia after 2000 and to enhance its realibility and safety.
In particular, the MLR reactor will ensure:
- testing of FE and FA of light water cooled reactors (VVER);
- testing of FE and FA of perspective liquid metal cooled reactors;
- testing of assemblies with thermoionic conversion of thermal energy into the electric one;
- radiation testing of materials by fast neutron flux density equaling to $5 \bullet 10^{14} n/cm^2 s$ which mainly applies the aims of creating and updating the thermal reactors, as well as the study of fundamental aspects of radiation materials reseach;
- neutron radiography of FE, FA and other devices.

The MLR location near Obninsk having a number of Scientific Institutes which use radiation for their research will allow to widen the possibilities of its utilization by means of:
- creating the medical complex using fast neutron beem;
- arranging the production of various radioisotopes;
- creating the complex of radiation devices for activation analysis;
- creating the complex for testing nuclear instrumentation.

3. Core and reflector

As is shown in Fig.1, in the MLR reactor core the 30 FA are located in a hexagonal lattice with 90-95 mm pitch (depending on fuel element type in FA). The two possible types of FE are considered: tubular-type and pin-type ones. The use in the meats of both tubular and pin type FE of UO_2-Al was intended, which is widely applied now in most research, test and other Russian reactors. Aiuminium alloy is used as FE claddings. The cross-section of FA with FE of tubular type is shown in Fig.2. Final choice of FE type for the MLR reactor FA will be made after the study of their fabrication technology and the appropriate testing. The height of the reactor core is chosen to provide the conditions for the representability of FE and FA testing and is equal to 100 cm.
In some FA in the special channels the absorber rods of the control and rpotection system (shim-safety and regulating rods) are located. In part the regulating rods can also be located in the reflector. The use of burnable poisons incorporated in the FA components to compensate some part of reactivity margin is provided.
In the reactor`s peripheral reflector the beryllium blocks of hexagonal section are used. They are located with the same pitch as the FA. The beryllium blocks have the central holes up to 50 mm in diameter in which the ampoule channels or beryllium plugs are located. The special beryllium blocks will be used for location of horizontal channel`s parts comprising in the reactor vessel boundes. The thickness of the reflector is 40 cm. The reactor core and reflector are located in the open vessel, which provide free access for placing the loop channels and other experimental devices, as well as larger reactor`s adaptability while the experimental programs change. Main characteristics of the MLR reactor are presented in Table 1.

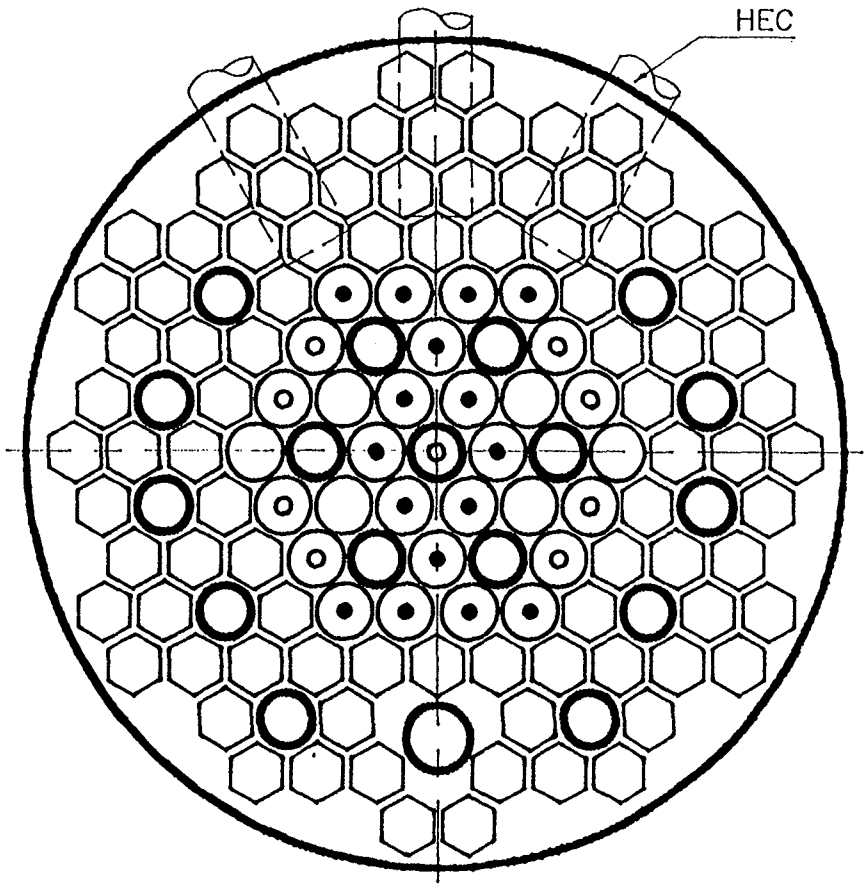

– Fuel Assembly

– Fuel Assembly with shim–safety rod

– Fuel Assembly with experimental channel (ampoule)

– Loop channel

– Central channel for material testing

– Beryllium block

HEC – Horizontal esperimental channel

Figure 1. Horizontal section of the MLR reactor core and reflector.

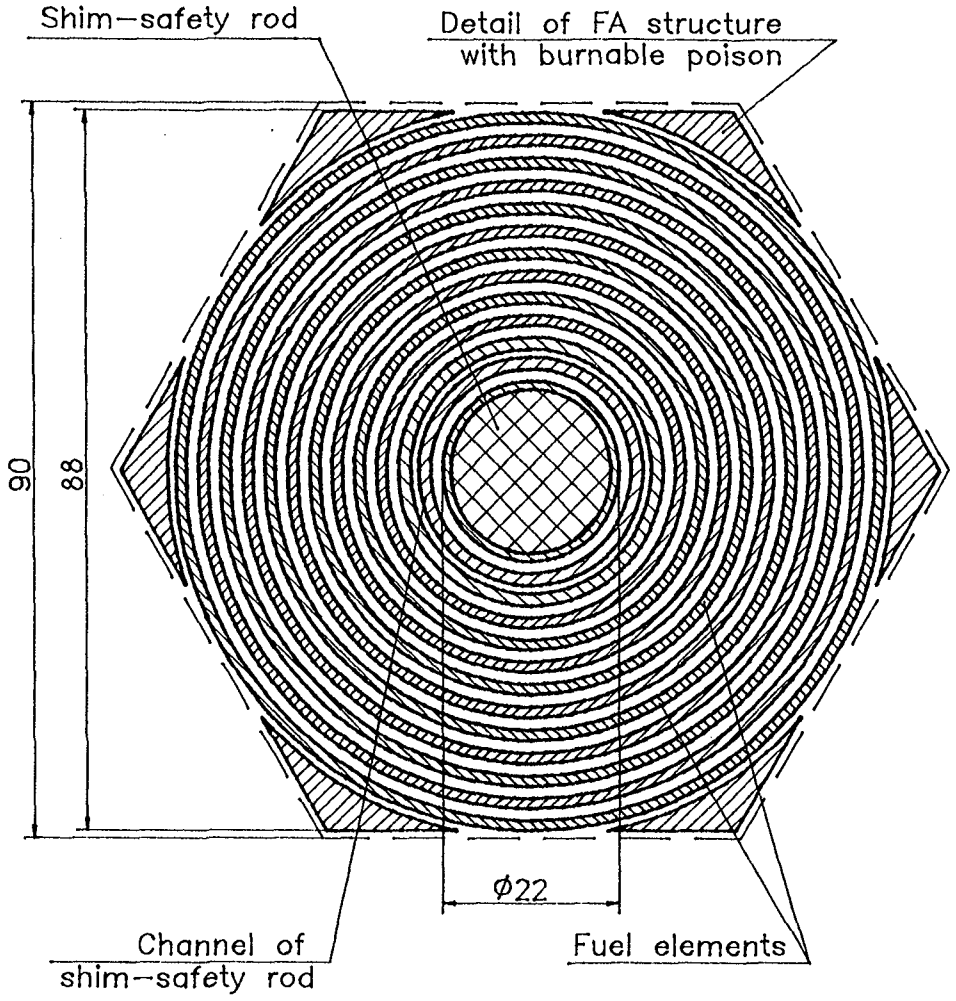

Figure 2. Cross–section of the FA with tubular–type fuel elements.

Table 1. Main Characteristics of the MLR reactor

1. Thermal power, MW	100
2. Fuel assemblies number in the core	30
3. Diameter of the core, cm	~60
4. Height of the core, cm	100
5. Uranium enrichment, %	19.75
6. Uranium-235 concentration in the core, g/l	~100
7. Power density in the core, kW/l:	
- average	400
- maximum	1000
8. Maximum density of neutron flux, m^{-2} s^{-1}:	
- fast (E>0.1 MeV) in the core	$7 \bullet 10^{18}$
- thermal (E<0.625 eV) in reflector	$5 \bullet 10^{18}$
9. Water pressure, MPa:	
- at the core inlet	0.7-0.9
- at the core outlet	0.2
10. Water velocity in FA gaps, m/s	10
11. Water temperature, °C:	
- at the core inlet	40
- at the core outlet	77
12. Maximum temperature of FE cladding, °C	100-110
13. Duration of the cycle, day	-28

4. Experimental devices

As is shown in Fig.1 in the MLR reactor core there are:
- the central channel for material testing 90 mm in dia;
- 6 loop channels 90 mm in dia;
- up to 8 ampoule channels within the FA 40-50 mm in dia.

In the reactor reflector up to 11 loop channels may be installed. The outside diameter of these channels can be different: 90-150 mm. Moreover into the beryllium blocks holes the ampoules with isotope targets or material samples 40-50 mm in diameter can be installed.
To provide the necessary conditions of a FE testing in the loop channels (pressure, temperature, flow rate of coolant and others) the 11 loop facilities are envisaged.
So far as at the SSC IPPE only one BR-10 reactor with beem tubes operates, run from 1958, at the MLR reactor the 3 beem tubes are envisaged:
- for neutron investigations;
- medical for neutron therapy;
- for neutron radiography.

5. Cooling system

In terms of traditional core cooling scheme, adopted for the majority of pool type research reactors, water in the core moves downward. In this case water velocities in the gaps between fuel elements of FA are no more then 5-6 m/s, since the pressure drop in the core must not exceed water column height in the pool above the core.
In the MLR reactor core the water moves upward. Within this scheme is no limitations specified above. So far, water velocities in the FA gaps can be drastically increased and, hence, the power density in the core can be raised. In order to prevent the FA rising at water movement in the core from

bottom upward in the MLR reactor the FA cooling scheme is adopted, which is analogous to the one used in the sodium cooled reactors. Under this scheme the FA fuel elements must be placed into the casing hermetically joint with the FA`s tail.
The MLR reactor vessel is installed at the pool bottom 12 m in depth and has the lower pressure chamber, in which the primary circuit water is fed under pressure of 0.7 MPa. The primary circuit water has 3 branches. In each branch there is the centrifugal pump providing the flow rate of 300 kg/s. From the pressure chamber the greater part of water moves upward cooling fuel elements of the FA. The part of the water gets into the pool penetrating through annular slitts between the FA tails and the pressure chamber bottom. Going out from the core water is mixed with the water coming from pool through upper open part of the reactor vessel and by discharge pipelines the water gets into the hold-up tank. From the hold-up tank the water gets into the heat exchangers between the primary and secondary (intermediate) circuits. From there the water is fed by the pumps into the pressure chamber of the reactor vessel. Descending from the pool into the reactor vessel the water flow locks-in the outlet of water from the reactor vessel into the pool.
When the primary circuit pumps are stopped the FA cooling in the core is fulfilled by natural circulation of the pool water through the FA. To provide this on the pressure pipelines there are the valves to be opened at the pumps stop.
Through the appropriate heat exchangers the heat from all of the loop facilities` circuits is also transfered to water of the secondary circuit. On its turn the heat of the secondary circuit is transfered to the third circuit, having the cooling towers for dissipating of heat into the atmosphere.

6. Conclusion

After the shut down in 1993 of the MR reactor at the RRC "KI" the Russia`s experimental base for radiation testing of a fuel elements and materials is provided mainly by:
- the SM-3 reactor (SM-2 after the modification of 1991) with sufficiently high fast neutrons fluxes densities;
- the MIR multiloop reactor, which, however, after the 30 years, operation, needs radical reconstruction to continue its further utilization;
- the IVV-2M pool type reactor 15 MW at Sverdlovsk branch of RDIPE started up in 1966.

The MLR reactor creation should not be considered as an alternative to other Russia`s reactors with loop ficilities. The MLR reactor, however, may essentialy renovate and widen the experimental base in central part of Russia in order to validate the selected directions of Russia`s nuclear power industry development after 2000.
The geografical closeness to the MLR reactor of the two leading Scientific Centers (IPPE and RRC "KI") and a number of R&D institutes creates the premises of its worth utilization, including the possibility of foreign countries` participation in works.

7. References

[1] B.F.Gromov, P.M.Egorenkov, V.V.Kousin, M.N.Lantsov, V.A.Nasonov, V.P.Radchenko, E.P.Ryazantsev, A.M.Smirnov, A.V.Taliev, V.N.Sharapov. Proposals for the MLR material testing loop reactor. Trans. XXIX and XXX Winter Schools of PNPhl, Section "Physics and Engineering of reactors". St.Peterburg, 1996, 43-54.

CH0100348

DESIGN STUDY OF EVENTUAL CORE CONVERSION FOR THE RESEARCH REACTOR RA

M. V. MATAUŠEK and N. MARINKOVIĆ
VINČA Institute of Nuclear Sciences, 11 001 Belgrade, Yugoslavia

ABSTRACT

Main options are specified for the future status of the 6.5 MW heavy water research reactor RA. Arguments *pro* and *contra* restarting the reactor are presented. When considering the option to restart the RA reactor, possibilities to improve its neutronic parameters, such as neutron flux values and irradiation capabilities, are discussed, as well as the compliance with the worldwide activities of Reduced Enrichment for Research and Test Reactors (RERTR) program. Possibility of core conversion is examined. Detailed reactor physics design calculations are performed for different fuel types and uranium loading. For different fuel management schemes results are presented for the effective multiplication factor, power distribution, fuel burnup and consumption. It is shown that, as far as reactor core parameters are considered, conversion to lower enrichment fuel could be easily accomplished. However, conversion to the lower enrichment could only be justified if combined with improvement of some other reactor attributes.

1. Introduction

Basic facts about operation, ageing and reconstruction of the 6.5 MW heavy water research reactor RA, at the VINČA Institute of Nuclear Sciences, have been presented and discussed in detail in some earlier papers [1,2]. This reactor of USSR origin was shut down for renewal and reconstruction in 1984, after 25 years of operation. Since for a number of different reasons refurbishment of the reactor has not yet been accomplished, its future is presently being seriously reconsidered. Three main options for the future status of the reactor are identified: (1) restarting the reactor, (2) conservation of reactor systems and components and (3) reactor decommissioning. In view of natural degradation and ageing, conservation of the reactor systems and components, in fact, is just a postponed decommissioning.

Among arguments against restarting the reactor, one should mention the difficult economic situation and limited investment funds in the country, lower requirements for experimental research and irradiation services and decreased domestic market for radioisotopes and radiopharmaceuticals. On the other hand, there are arguments in favor of restarting the reactor: reserves of fresh fuel are sufficient for years of reactor operation; fresh heavy water is available at the site; most of the new electronic equipment for safety, control and radiation systems has already been obtained through the IAEA technical assistance program; the reactor vessel was in good condition at the time of inspection and reasonably good condition of other major reactor components can be assumed. It seems that a general belief prevails that the RA reactor could still represent a valuable facility for research and isotope production, which can help preserve domestic knowledge and manpower in nuclear fission energy production and application.

When considering the option to restart the RA reactor, possibilities to improve its neutronic parameters, as neutron flux values and irradiation capabilities, should be studied, as well as the compliance with the worldwide activities of the Reduced Enrichment for Research and Test Reactors (RERTR) program [3]. In the present paper, possibility of core conversion is examined. Detailed reactor physics design calculations are performed for different fuel types and uranium loading. The results obtained for the effective multiplication factor, reactivity and power distribution, fuel management schemes, fuel burnup and consumption, are presented and discussed.

2. Reactor Core Configurations

The RA reactor fuel element is an 11.3 cm long cylinder, with 3.72 cm outer diameter, consisting of an outer tube with 2 mm thick fissionable material, having 1 mm thick inner and outer Al cladding, and 1 mm thick inner Al tube which serves as the cooling intensifier. Fuel elements are inserted into a 2 mm thick Al tube (10 or 11 slugs/tube), thus forming a fuel channel. The reactor RA core, Fig. 1, consists of up to 84 channels in a square lattice with 13 cm pitch. Originally, the fissionable material was 2% enriched uranium metal. After 1976, new fuel, of the same geometry and the same content of ^{235}U, but in the form of 80% enriched uranium-oxide dispersed in aluminum, was purchased from former USSR.

If the RA reactor is to be reconstructed and restarted, possible core conversion and power upgrade should be examined. The following main options can be anticipated:

(1) The existing 80% enriched fuel in the form of tubular slugs can be used in the standard RA reactor core arrangement, with the 13 cm lattice pitch. If reactor power is kept at or below the nominal level of 6.5 MW, the reactor cooling system would probably require no special reconstruction. If an in-core fuel management scheme is applied in which fresh fuel is inserted in the central core region and burned out fuel is removed from the outer region of the core, radiation damage of the rather old reactor vessel would be kept at the lowest possible level, while maximum value of neutron flux would be attained in the central irradiation channel. The main advantages of this option are relatively low investments and short reconstruction period. The main disadvantages are low neutron flux and limited irradiation space in the core.

(2) In order to comply with the worldwide activities of the Reduced Enrichment for Research and Test Reactors (RERTR) program [3], the existing fuel could be refabricated into 20% enriched fuel with the same geometry of tubular slugs and the same content of ^{235}U per slug. Supposing that the price of 20% enriched uranium per unit of mass of ^{235}U is about half the price of that for the 80% enriched uranium, the difference in price of uranium could only cover the cost of fuel refabrication. If this new fuel would be used in the same regime as in the previous option, which is technically feasible, all main advantages and disadvantages would be about the same.

(3) The fuel refabrication process could be used to produce advanced fuel in the form of a solid tube or a cluster of rods. In this way the amount of fissionable material per fuel channel could be increased, as well as neutron flux and the total power level. If the same lattice pitch was preserved, not too large reconstruction of the cooling system would be required, e. g. one additional pump. At the same time, a more compact reactor core would leave more free space for irradiation purposes inside the reactor vessel., while the thus formed additional radial reflector would prevent radiation damage of the vessel. Generally, the reconstructed reactor would be a much more powerful and versatile facility for research and isotope production than the original one.

(4) The most serious reconstruction of the reactor would require change of the reactor vessel. This would enable a decrease of the lattice pitch and formation of a compact reactor core with a much higher neutron flux. At the same time additional irradiation space could be provided, for instance horizontal experimental channels through the reactor core could be introduced. Of course, this option would also require a serious reconstruction of the cooling system. The whole operation would be very expensive and could only be justified if decision to restart the reactor was made even if it implies exchange of the reactor vessel for technical reasons.

Main features of the above explained options are summarised in Table 1. In the present economic situation of the country, and also having in mind the general negative attitude of the society towards the use of nuclear energy, the last two options seem to be very unlikely. Thus, in the present paper only the first two options are studied in more detail, while extrapolation to the third option is rather straightforward. Detailed reactor physics design calculations are performed for the first few cycles with the existing 80% enriched fuel and with the possibly refabricated 20% enriched fuel with the same geometry and the same content of ^{235}U per a fuel element. Consumption of ^{235}U per day of reactor operation at the same nominal power was taken as a representative quantity for intercomparison of the two options.

Table 1. Main options for the eventual core conversion and power upgrade of the RA research reactor

	Fuel type	Lattice pitch	Power	Special requirements	Advantages	Disadvantages
1	80% ^{235}U tubular slugs	13 cm	6.5 MW	-	low cost, short reconstruction period	no improvement of irradiation possibilities
2	< 20% ^{235}U tubular slugs	13 cm	6.5 MW	new fuel	moderate cost, compliance with RERTR	no improvement of irradiation possibilities
3	< 20% ^{235}U tube or cluster of rods	13 cm	> 6.5 MW	new fuel, additional cooling	compliance with RERTR, increased irradiation possibilities	considerable investment
4	< 20% ^{235}U tube or cluster of rods	< 13 cm	> 6.5 MW	new fuel, additional cooling, new vessel	compliance with RERTR, considerably increased irradiation possibilities	very high cost, long reconstruction period

3. In-Core Fuel Management Studies

When original 2% enriched uranium metal fuel was used, the RA reactor in-core fuel management scheme was based on a three step cycle, each lasting 15-20 days, with both radial and axial fuel shuffling. The average fuel consumption was 1.5 fuel elements per operating day at nominal power. For the purpose of the analyses performed here, a two-step fuel management scheme with radial fuel shuffling is assumed. At the end of each cycle about half of the fuel channels is removed from the outer region of the core, Fig. 1. To begin a new cycle, the fuel from the central core region is moved into the outer region, while fresh fuel is inserted into the central region.

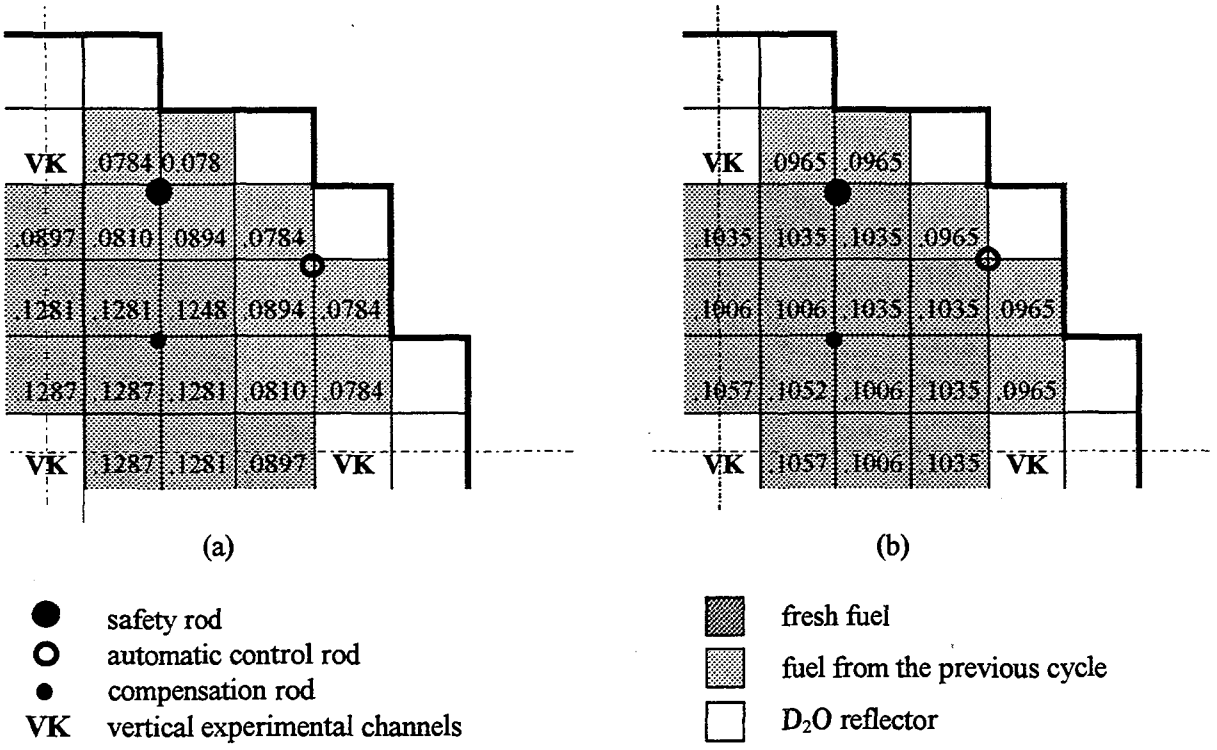

Fig. 1. Schematic representation of 1/4 of the equilibrium RA reactor core with (a) fuel with initial enrichment 80% ^{235}U, (b) fuel having initial enrichment 20% ^{235}U.

4. Results

The standard reactor computation scheme WIMS-TRITON was applied to perform detailed neutronic calculations for different fuel types and uranium loading. Experimental verification of the WIMS-TRITON scheme was performed previously by studying different configurations of the critical facility, i.e. the zero power research reactor RB at the VINČA Institute [4]. The complex modular code WIMS is used to calculate the space-energy dependence of neutron flux and reaction rates and to produce few group burnup dependent data needed in diffusion theory calculations. Its main advantages are a very elaborate nuclear data library, several transport theory procedures and geometry options, and the fact that, being generally available, it was thoroughly tested by a large number of users. The 3-D few group diffusion theory code TRITON is used for calculating overall reactor core parameters like effective multiplication factor, neutron flux and power distribution, fuel burnup and consumption.

Power distribution (MW/channel) at BOC for reactor operating at 6.5 MW is given in Fig. 1. Time dependent effective multiplication factor of the reactor operating at full power is presented in Fig. 2.

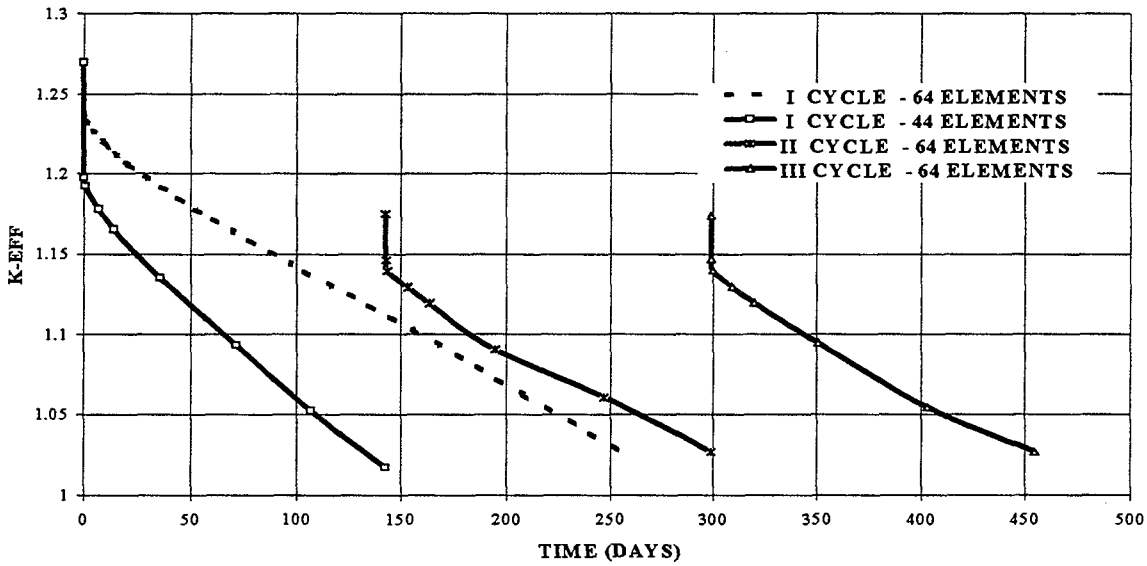

(a)

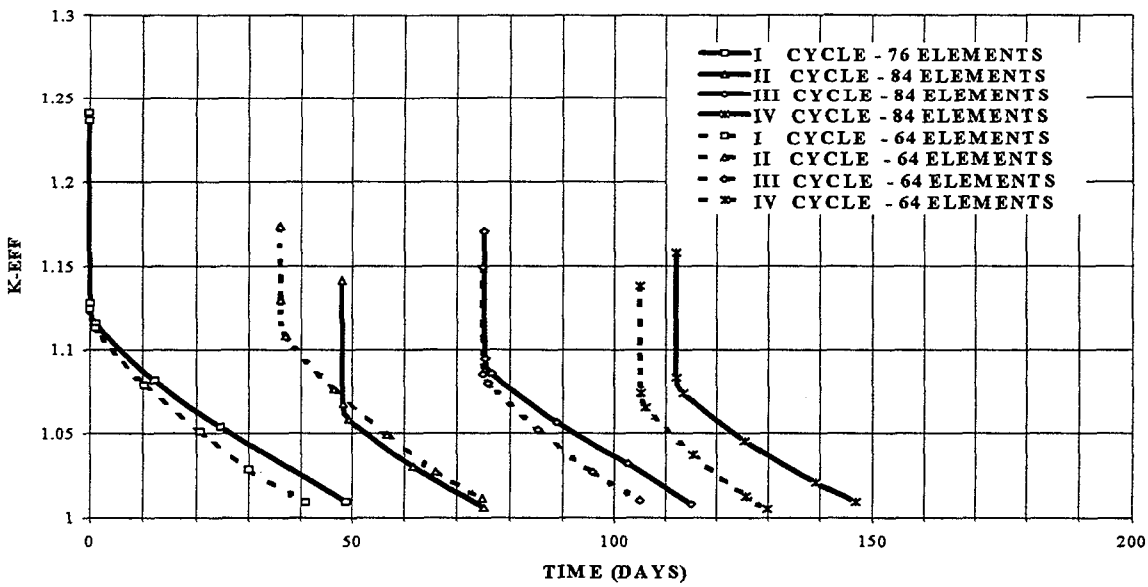

(b)

Fig. 2. k_{eff} of the reactor operating at full power for the first few cycles:
(a) initial fuel enrichment 80% ^{235}U; (b) initial fuel enrichment 20% ^{235}U

For both 80% enriched and 20% enriched fuel, two different configurations of the first core were studied, the number of fuel channels being 64 or 44, and 64 or 76, respectively. In all the cases studied, it was supposed that there are 11 fuel elements per a fuel channel, each fresh fuel element containing 7.65g of ^{235}U. It was assumed that a cycle is completed when k_{eff} becomes less than 1.02. For the core with fuel having initial enrichment 80% ^{235}U, the third cycle was considered to be an equilibrium one, Fig. 2a. For the cores with fuel having initial enrichment 20% ^{235}U, it was considered that equilibrium is established after four cycles, Fig. 2b.

Basic data about fuel inventory and consumption in the considered cycles are summarised in Table 2. Amount of ^{235}U at the beginning of a cycle (BOC) is the sum of the ^{235}U content in the fresh fuel and the ^{235}U content in the fuel left in the core from the previous cycle. Consumption of ^{235}U in a cycle is a sum of the ^{235}U amount burned during the cycle and the content of ^{235}U in the fuel to be removed from the core at the end of the cycle (EOC). Taking into account the length of the equilibrium cycle, the average ^{235}U consumption per operating day at the full reactor power was calculated for both initial fuel enrichments.

Table 2. Equilibrium cycle parameters for different initial fuel enrichments

Initial fuel enrichment	Number of fuel channels from previous cycle	Number of channels with fresh fuel	Cycle length (days)	^{235}U consumption (g)	^{235}U consumption per operating day (g/day)
80%	36	28	150	2360	15.1
20%	40	44	35	3641	104
20%	28	36	25	3450	138

The results presented here should be considered as qualitative rather than quantitative ones. They indicate that, as far as the reactor core parameters are considered, conversion to lower enrichment fuel could be easily accomplished. By optimizing fuel management schemes, fuel consumption could certainly be decreased for both initial fuel enrichments. Still, the most effective use of the available fissionable material can be achieved if the existing fuel is burned in its present form.

5. Conclusions

If the RA reactor is to be reconstructed and restarted, different options for core conversion and power upgrade should be examined. Reactor physics calculations performed indicate that, as far as reactor core parameters are considered, conversion to lower enrichment fuel could be accomplished. However, from the point of view of the effective use of the available fissionable material, conversion to the lower enrichment could only be justified if combined with other major reconstruction of the reactor.

6. References

1. M. V. Mataušek, N. Marinković, Z. Vukadin, Proc. Topical Meeting Research Facilities for The Future of Nuclear Energy, World Scientific Publishing, 1996, p. 69.
2. Mataušek, Z. Vukadin, R. Pavlović, N. Marinković, Trans. Int. Conf. Research Reactor Fuel Management (RRFM'97), Bruges, Belgium, 1997, p.115.
3. A. Travelli, ibid., p. 29.
4. M. V. Mataušek, N. Marinković, Experimental Verification of Methods and Codes Used in Design Studies of New Reactor Concepts and Improved In-core Fuel Management Schemes, IAEA Project No. 5207/RB, reported in IAEA-TECDOC-815, Vienna, 1995, p. 52.

CH0100349

ABOUT A FUEL FOR BURN-UP REACTOR OF PERIODICAL PULSED NUCLEAR PUMPED LASER

A.I.VOLKOV, A.V.LUKIN, L.E.MAGDA, E.P.MAGDA, I.S.POGREBOV, I.S.PUTNIKOV, D.V.KHMELNITSKY, A.P.SCHERBAKOV

Russian Federal Nuclear Center -
All Russian Institute of Technical Physics
Snezhinsk, 456770, Russia, Chelyabinsk area, p. b. 245

ANNOTATION

A physical scheme of burn-up reactor for Periodic Pulsed Nuclear Pumped Laser was supposed. Calculations of its Neutron-physical parameters were made. The general layout and construction of basic elements of reactor were discussed. The requirements for the fuel and fuel elements are established.

1. Introduction

One of the possible directions of future technique development is area of powerfull periodic pulsed lasers. With such device they tie further progress in space technique, particularly in creation of new engines for space crafts [1] and in cleaning of near to Earth space from space wasts [2]. For this purposes the laser devices are required which could provide energy of laser beam from tens of kilojoules up to hundreds of megajoules at pulse duration from teens of nanoseconds up to millisecond and with repetition frequency up to several Hertzes. Duration of continious laser operation should be up to several minutes. The creation of pulsed-periodical laser with beam energy of some megajoules during one nanosecond is also actual for fission power station with inertial keeping of plasma.

The analysis shows that at high energies the preference must be given to nuclear pumped laser (NPL). The concept of periodic pulsed NPL with main energetic components formed by burn up pulsed nuclear reactor and neutron multiplying laser unit was given in works [3-5]. The requirements for the construction of pulsed reactor are rather strict [6,7]. The energy discharge in the reactor must be from one hundred to one thousand of megajoules per pulse at duration of the pulse not more than one millisecond and repetition frequency set to several Hertzes. Its fuel elements will have to operate at high average power in conditions of strong thermocyclic loading at high temperature. The high efficiency of feedback and possibility of fast heat sink during pause between pulses (when producing powerfull pulses with yield of not less than 10^{18} neutrons and with half width shorter than (ms) appear to be the most important requirements for the reactor. In works [6,7] there were also analyzed the possible physical schemes of these reactors and the results of their neutrons physical parameters calculations were given. These estimations had shown, that one of the most promising is the burn-up reactor with active zone (AZ) having the form of fuel elements assembly being cooled with liquid metal, and the fuel is uranium-zirconium hydride alloy with erbium addition. The goal of the present work is to more precisely formulate the physical scheme of such a reactor with rather small AZ and the highest possible feedback, and also to define the requirements for fuel and fuel elements.

2. The physical Scheme, Neutron-Physical Parameters and Mode of Operation of the Reactor

There was considered an AZ with diameter 46 cm and 40 cm height, consisting of six equal independent heat producing assemblies (HPA). Each assembly has form of triangular prism. The central angle of the triangle in its base is equal to 60 degrees. It is the hermetic covering, made of stainless steel (thickness of side walls is 0.2 cm), inside which the fuel elements are placed. There is 60 fuel elements inside HPA. In coverings of HPA's in opposite sides there present the holes with pipes in order to pump coolant through the AZ. All fuel elements are the same, they have form of cylinder, and they consist of thin cylindric shell (stainless steel) with outer diameter of 2 cm and thickness of 0.04 cm. The shell contains the fuel. The fuel is the alloy of zirconium hydride ($Zn\ H_{1.6}$, 93.65% - mas.) with 6% mas. uranium (having 90% enrichment) and with natural erbium (0.35% mas.). The density of the fuel is 5.6 g/cm^3. The length of the fuel part of the element is 40 cm. The layout the elements inside HPA covering in the true triangle lattice with step equal to 2.1 cm. The preliminary estimations gave evidence that this diameter of fuel elements is the reasonable compromise between the approximations to obtain high cooling rates (it leads to smaller diameters of the element) and the desire to get high neutron-physical parameters (improving with increasement of the diameter). The estimated frequency of repetition of pulses having the 70 MJ energy discharge may reach 0.05 s^{-1}, if the temperature of feeding sodium is 400^oK and speed of its flow is 9 m/s. The HPA's are attached to a load-carrying frame in such a way that the gaps between them have widthes of 1 cm. In these gaps the reactivity control elements (RCE) are placed. The material of control elements is gadolinium - the effective neutron absorber. There are two control elements. The pulse rod (PR) and the safety unit (SU). The reactivity control elements are made of foils of metal gadolinium 0.5 cm thick and 45 cm wide. The length of the PR is 7.0 cm, the length of SU is 30 cm. They have forms of six-arm (PR) and four arm (SU) spider. The control elements are installed to AZ from opposite sides. PS and SU may be moved along reactor axis from the fixed positions inside AZ to full extraction out from it. The speed of PR extraction from AZ in producing maximal pulse will have to be not less than 8 m/s. The AZ is surrounded with continious molibdenium reflector 5 cm thick. AZ contains ~ 230 kg of fuel, ~ 21 kg of construction materials (stainless steel, etc.) and ~ 17 kg of liquid sodium. Its volume is nearly 70 liters. The section of AZ by plane orthogonal to its axis is shown on fig. 1.

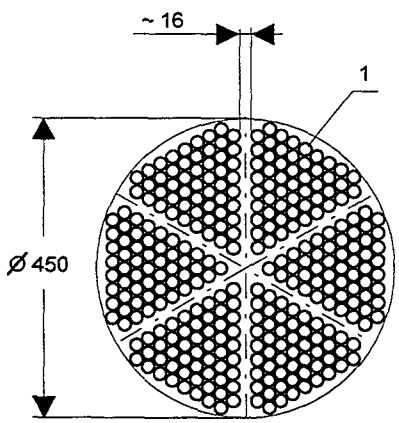

Fig. 1. The Cross Section of AZ. 1 - fuel element. Sizes in mm.

The neutron-physical parameters of described above AZ were calculated by means of MCU-RFFI code [8]. The effects of chemical binding were taken into account. According to the carried out calculations for the described above construction with RCE's outside AZ the value of $K_{ef} \approx 1.04$ ($1\sigma \approx 0.5\%$). The effectivities of PR and SU are correspondently ~ 5% and ~ 15%. The effectivity of reactivity feedback for quasi-static heating the fuel from 300^oK to 1200^oK (the average temperature over the fuel) is ~ 10%. The energy discharge for maximal fission pulse is equal to 90 MJ at half-width of 0.6 ms, the fuel heating is ~ 500^oK per pulse, and neutron yield from AZ is ~ $2 \cdot 10^{18}$ (the share of side surface in this value is $1.1 \cdot 10^{18}$ neutrons).

The average energy of outcoming from AZ neutrons is ~ 0.9 MeV. The effective lifetime of prompt neutrons is ~ 6.5 mcs. For the considered AZ the ratio of maximal fuel heating per pulse to its average value is K_T~2 (let's mention, that for the reflectorless AZ this coefficient is ~2.2).
In order to optimize the AZ parameters there was considered a replacement of 5 cm thick molibdenium reflector to reflector made of other materials (beryllium, beryllium oxide, graphite, zirconium hydride, tungsten, natural uranium) with the same thickness (5 cm), and also the profiling of uranium concentration in fuel over the active zone volume. The best reflectors appeared to be beryllium, beryllium oxide and graphite. However the maximal ratio of total neutron yield from AZ to the factor K_T (the one characterizing the top parameters of the reactor) appeared to be nearly equal and exceeded the same value for the reactor with molybdenum reflector nearly by 1.5 times. If in addition to the graphite reflector each HPA contains fuel elements with different uranium concentration (e.g. with 6% in central area of the reactor and 12% in peripheral area) or with uranium of different enrichment (for example ~ 50% in central area and ~ 90% in peripheral one), then ratio of maximal and average temperature change will be nearly 1.35 at non considerable (nearly by 10%) increasement of neutron output from the reactor at the same average fuel temperature. Thus the results of these estimations show the principal possibility of increasement of maximal energy discharge in AZ nearly by 1.5 times at the same level of maximal fuel temperature. The additional measure in this direction is increasement of length of fuel part of AZ. The final solve of these questions will be obtained in optimizing the construction of the main reactor elements (attachment of HPA's to the case, actuator gears and constructions of PR and SU).
Pulsed mode of reactor operation consists of the next stages. Initially by means of outer heat source the deep subcritical AZ is being heated up to the bottom value of operational temperature, equal to 400°K. The PR and SU are now in AZ. Then with a help of SU extraction from AZ the reactor is being driven to the subcritical state near the delayed critics. Reactor reactivity must have the value, that will provide the pulse of required energy discharge when PR will be extracted from AZ. After this (for instance by means of pneumatic actuator) the PR will rapidly be extracted from AZ. As the result of fission pulse reactor heats itself and comes to subcritical state. Immediately after the pulse the PR rather slowly (for example being driven by a spring) goes to AZ. Then AZ cooling takes place. If there is a necessity to produce a new pulse then after cooling the cycle is to be repeated. If the single pulse is being produced, then immediately after the pulse the SU (e.g. driven by a spring) together with PR goes into AZ and drives the reactor into deep subcritics.

3. The General Layout and The Basic Elements

The basic elements of the reactor are: the active zone, the case, the neutron reflector, the RCE's, the moving gears of RCE's, the neutron source, neutron and gamma fields sensors, temperature sensors. There was elaborated the preliminary construction scheme of the reactor (fig. 2). It was taken, that the diameter of the reactor should not exceed 60 cm, there were no strict limitations for reactor length. The AZ was formed by 6 HPA's, and each HPA contains 53 fuel elements.
The specialities of reactor construction are the next: the horizontal placement, large surface of RCE's (in our case they have form of foils based on metal gadolinium, but usage of cylindric boron elements was also considered); the strictly given sizes. Neutron reflector is attached to the external side of AZ case.
At the stage of elaboration of experimental version of the reactor the construction with three RCE's is under consideration. The third additional element is the reactivity compensator (CR) consisting of one gadolinium foil 30 cm long, 22 cm wide and placed in part of AZ from the SU side in one (the bottom one) of the free gaps. The maximal depth of SU, PR and CR dip into the active zone is correspondently 30 cm, 9 cm and 30 cm. Average speed of SU and PR insertion to the AZ (by means of spring actuator) is 2 m/s (insertion time is 0.15 s and 0.05 s correspondently), the average speed of extraction from AZ for PR (by pneumatic actuator) is 4 m/s (extraction time is 0.1 s), for SU - 0.5 cm/s and 0.1 cm/s (at stroke up to 20 cm and at stroke from 20 to 30 cm), and for the CR its motion rate is the same in both directions and equal to 0.3 cm/s.

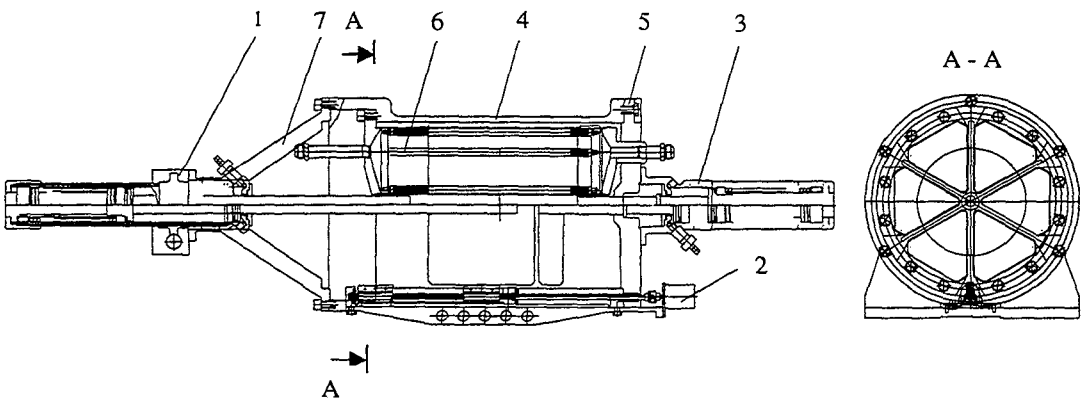

Fig. 2. The scheme of RCE's motion gears layout. 1 - MG of SU; 2 - MG of CR; 3 - MG of PR; 4 - AZ case; 5 - the bottom; 6 - fuel elements assemblies; 7- props of SU MG attachement.

For the detail elaboration of ECR motion gears the next three problems were formulated: minimization of mass of movable parts of ECR motion gears; the ECR's must be able to be reliably fixed in inserted into AZ position during AZ assemblage and during pauses between pulses; dismounting of ECR motion gears must be able to be carried out without AZ disassemblage, i.e. with inserted ECR's. The scheme of reactor assembly of the reactor is given on fig. 3 and it defines the conditions of: assemblage and mounting of the reactor; maintenance works with the reactor; AZ elements replacement in process of reactor exploitation; electric power feeding, gase cooling and other communications; placement of technological and research equipment.

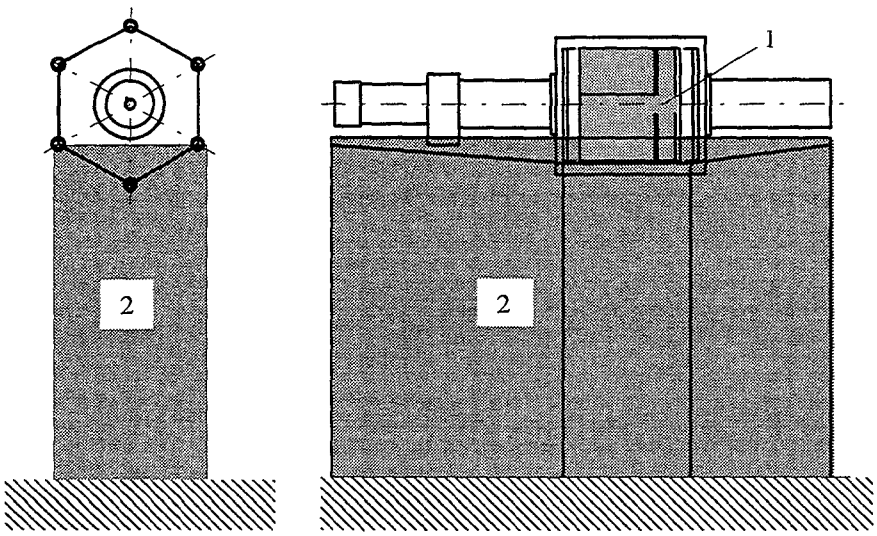

Fig. 3. The scheme of reactor placement on the mounting stand. 1 - the active zone; 2 - zone of supporting constructions, life support communications, technological and diagnostic equipment, etc. placement.

4.The Requirements for the Fuel

Analysis of application of the reactor, its neutron-physical characteristics and operational modes had allowed to establish the next requirements for the fuel and fuel elements. For the fuel they are:

1) in composition - it is the uniform alloy of zirconium hydride with uranium and erbium at mass ratios correspondently 93.65%, 6% and 0.35%, with density not less than 5.6 g/cm^3;

2) hydrogen concentration in the fuel must correspond to the maximal stability of the fuel at its pulsed heating to the temperatures over 1000°C (up to 1200°C);

3) diameter of uranium particles in the fuel should not exceed 20 mcm, and diameter of erbium particles should not exceed 100 mcm;

4) diameter of fuel tablets is to be 1.85 cm, length - 4.0 cm;
5) the fuel must to the most extent keep the fission products;
6) warranty operational time should be not less than 30 years.
For fuel elements the requirements are the next:
1) diameter of shell is to be 2.0 cm, length of the active part is to be not shorter than 40 cm, thickness of the shell is to be 0.04 cm with minimal possible amount of construction material (stainless steel 12H18N10T) in edges - attachement units;
2) the fuel elements must be hermetic under the pressure of helium filling there internal gaps of 1 bar;
3) resistance for thermal cycles with period of 10...20 seconds at heating of fuel part up to the maximal temperature;
4) the calculated operational resource of fuel elements is to be not less than 10^5 pulses;
5) warranty operational time - not less than 30 years.

5.References

[1] Phipps C.R., Michaelis M.M., LISP: Laser Impulse Space Propulsion. In: Laser and Particle Beams (1994), V. 12, N 1, p. 23-54.

[2] Phipps C.R., Michaelis M.M. Cleaning Near-Earth Space Oebris in 4 Years using a 20 kW, 530 km repetitively pulsed Laser. Materials of conference "Physics of Nuclear excited plasma and problems of nuclear pumped lasers (NPL-94)". Arzamas-16, 1994. RFNC-VNIEF, 1995, V. 2, p. 252-259.

[3] Schmidt T.R., McArthur D.A. Neutronics Analysis for Subcritical Nuclear Laser Driven Exicited by a Fast Pulse Reactor. Report SAND 76-0199. Sandia National Labs., Albuquerque, NM 87185, February, 1976.

[4] Schneider R.T., Hole F. Nuclear-pumped Laser. Advances in nuclear Science and Technology. Plenum Press. Ed. by J.Lewins, M.Backer, 1984, V. 16, p. 257-261.

[5] Zrodnikov A.V. The Perspectives of nuclear pumped laser applications in science, technique and technology. Proc. Of the conference "Physics of Nuclear excited plasma and problems of nuclear pumped lasers (NPL-92)". Obninsk, 1992, V. 1, p. 122-143.

[6] Lukin A.V. Burn-up Reactors for periodically pulsed nuclear pumped laser. Proceeding of conference "Physics of Nuclear excited plasma and problems of nuclear pumped lasers (NPL-94)". Arzamas-16, 1994. RFNC-VNIEF, 1995, V. 2, p. 195-201.

[7] Lukin A.V., Magda L.E., Khmelnitsky D.V. Burn-up reactors for periodic pulsed nuclear pumped laser. In Questions of atomic science and technique. Ser. Nuclear Reactors Physics, 1996, iss. 2 (Pulsed reactors and simple critical assemblies), p. 57-64.

[8] Leeman G.F., Majorov L.V., Judekevitch M.S. The MCU program - hit for Monte-Carlo method solving of radiation transport problems in reactors. In: Questions of atomic science and fiction, Ser. Physics and Technique of nuclear reactors. 1995, iss. 7, p. 27-31.

CH0100350

RESEARCH REACTOR FACILITIES & RECENT DEVELOPMENTS AT IMPERIAL COLLEGE, LONDON.

S.J. FRANKLIN, PROF. A.J.H. GODDARD and J. O'CONNELL
EAS, ICCET, T.H.Huxley School of the Environment, Earth Science and Engineering, Imperial College of Science Technology & Medicine, Silwood Park, Ascot SL5 7TE – UK

ABSTRACT

The 100 kW CONSORT pool-type Reactor is now the only Research Reactor in the UK. Because of its strategic importance, Imperial College is continuing and accelerating a programme of refurbishment of the control system, and planning for a further fuel charge. These plans are described and the progress to date discussed. To this end, a description of the enhanced Safety Case being written is provided here, and refuelling plans discussed. The current range of facilities available is described, and future plans highlighted.

1. Introduction

The Imperial College (IC) Research Reactor is based at the Silwood Park Field Station, about 25 miles west of London. Designed jointly by GEC and the IC Mechanical Engineering Department, it first went critical on 9th April 1965. It is part of the Centre for Environmental Technology (ICCET), which is an interdisciplinary postgraduate research and teaching department split between the South Kensington campus and Silwood Park. The Environmental Analysis Section (EAS), of which the Reactor Centre is a part, provides a service to both academia and industry for reactor physics training, isotope production and irradiations, using core tubes, beam tubes, horizontal & vertical thermal columns and irradiation facilities incorporating fast pneumatic transfer. A specialist Analytical Services Group using the Reactor provides Neutron Activation Analysis. Other groups include Environmental Pathways and Processes Research Group, who utilise the wind tunnel and aerosol research facilities, as well as the IC-PMS facility. The Reactor has strategic importance for the UK, as it is now the only remaining Research Reactor in the country. It is therefore important to put in place refurbishment programmes and maintain and upgrade the safety case. This paper will focus on the Reactor Centre.

2. Usage of the Imperial College Reactor

With the closure of other UK Research Reactors the number and variety of users of the Imperial College Reactor is increasing. Some of these users can have their requirements met quite easily and can use existing Reactor and associated facilities, the only requirement being that new safety cases have to be developed for their particular work.

Some new users do, however, have extremely specialised needs and new Reactor facilities which have to be safety justified before commissioning need to be provided. In this respect, the original design of the CONSORT Reactor gave a lot of flexibility in that various beam tubes and thermal columns were provided. Several of these facilities have been modified or brought into use recently to enable specialised facilities to be developed.

The Reactor QA system developed for the Site Licence enables new experiments and/or modifications to be developed and authorised either internally or by reference to the independent Nuclear Safety

Committee and the Licensing Authority, depending on the nature and level of potential risks involved. Such modifications and/or experiments need to be provided with appropriate justification for safety, following well-established safety principles and guidelines. Expertise exists both within the Centre and from external consultants in order to provides guidance and advice.

It can be seen that new types of work using new or existing facilities on the Reactor can be accommodated and/or developed to a customer's specific requirements usually within a reasonably short space of time, depending on the level of potential risks involved. Such work that has been developed and carried out recently includes:

- Production of high activity tracers for use in industrial process monitoring.
- Production of low activity radiolabelled tracers used in the medical industry.
- Provision of testing facilities for neutron detectors over a wide range of Reactor powers from 1.5 watts to several kilowatts.
- Development of a foil-based flux-monitoring system giving rapid results to users of certain facilities.
- Provision of non-destructive testing facilities using neutron beams together with associated counting systems.
- New Reactor experiments developed and installed in order to provide training for students from external sites.

Fig.1 shows a general breakdown of the CONSORT Reactor operations by the type of work last year. Currently, isotope production leads the list of tasks at the Reactor Centre.

However, this breakdown will change this year, as even more use is made of the Reactor Centre as a whole as a training facility. New facilities under safety case development will also be installed by IC customers.

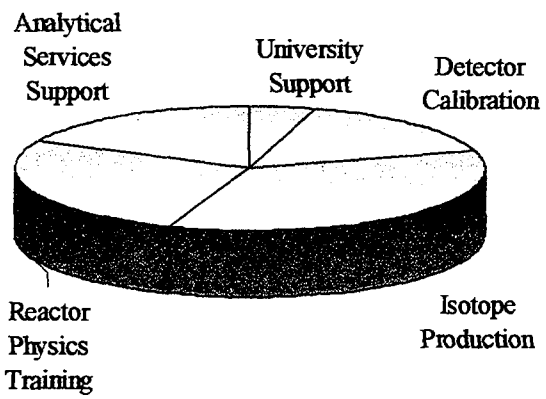

Fig. 1 Breakdown of Customer Utilisation

These new facilities are all in addition to the well-established facilities already associated with the Reactor. Such facilities provide for neutron activation analysis, radioisotope production, as well as existing experimental facilities for student training.

3. Background to Licensing Issues

Under the Conditions of the 1994 Nuclear Site Licence granted by the UK regulator, the Nuclear Installations Inspectorate of the Health & Safety Executive (HSE) requires the Reactor Centre to develop and enhance QA documentation. This paper focuses on the Site Licence Conditions (SLCs) that are devoted to the regular review of safety case documentation and the regular review of maintenance requirements throughout the lifetime of the plant. Although it is recognised that the low power and low overall source term of this Research Reactor make it a special case, CONSORT nevertheless operates under the same 35 Site Licence Conditions as the other UK nuclear installations. In common with all UK installations, further work is planned to develop the existing decommissioning safety case; to take advantage of the experience learnt at the UK's Risley Reactor and JASON. As with other nuclear installations, CONSORT has a Nuclear Safety Committee (NSC) of internal and external experts, who review the work in place for the Reactor.

Operations to monitor the Reactor systems for signs of ageing are ongoing, and have been discussed previously [2]. This paper reports the progress of that programme, and the plans to development and extend the existing safety case

4. The Safety Report

SLC 15 requires that arrangements are made to review the safety case at appropriate intervals. The arrangements require review every 10 years; the latest review began in late 1995, and the extended report is due to be completed in May 1999. It is intended that the layout of the revised report will follow both the IAEA Guidelines [4], and the HSE guidance provided to its own Nuclear Installations Inspectorate [5,6]. This will update the safety case from its current deterministic basis to take advantage of the modern techniques developed in Nuclear Power Plants and incorporate probabilistic safety assessment.

In order to assess the likely behaviour during steady state and transient events, a hydrodynamic and point kinetics model has been constructed using the PARET code, which has been applied to the IAEA standard Research Reactor [3]. Firstly, all potential faults have been identified in all parts of the Reactor system. Event trees have then been constructed to enable the probabilistic safety assessment to be made. This will be combined with a radiological assessment of normal operational behaviour and behaviour during faults. Particular emphasis place on sensitivity studies where parameters have uncertainties that are difficult to quantify.

5. Technical Specification

CONSORT is a 100 kW light water moderated, reflected/shielded and cooled pool-type Reactor, with the water cooling being essentially convective. The core consists of 24 fuel elements, each with a shroud of square cross-section and containing 12-16 high-purity aluminium clad plates of a UAl alloy with Highly Enriched Uranium (HEU) at 80%. The excess core reactivity is controlled by stainless steel clad cadmium control rods (one safety, plus two control). A stainless steel rod is used for the fine adjustments that are required by feedback changes due to changing coolant temperature throughout a working day, as the Reactor is only operated during normal office hours.

The first fuel charge had an inventory of approximately 3 kg ^{235}U, providing an excess reactivity of 1%. The original core was supplied to the UKAEA Dounreay / BNFL Springfields Mark I design in 1964, with 4 Mark III assemblies (with straight plates) supplied in 1976, and 5 in 1983 to raise available reactivity. Other papers can provide more detail about the Reactor systems [1].

6. Refuelling

In common with many other Research Reactor operators, IC is exploring the use of Low Enriched Uranium (LEU) for the next fuel charge. Because refuelling is planned to interfere with operations to only a minimal degree, the intention is to maintain the same size core, with the same geometry fuel. Work has begun to analyse the fuel design based around the uranium silicide route as offered by UKAEA Dounreay/BNFL Springfields, which uses enrichments of ~ 20%. It is most important to maintain the flux levels that are currently available in the experimental facilities on CONSORT.

7. Control Rod Timing : the Story So Far

In common with Nuclear Power Plants world wide, the CONSORT NSC has encouraged investigation of any trend in control blade drop time. Following a trip, the electromagnetic clutch disengages, and the blades drop on their stainless steel supporting tapes into channels between extra-spaced fuel. The drop is

essentially under gravity, although there is friction from the drive unit drum. A braking system then slows travel beyond around 60% insertion. The rationale is that distortion in components due to irradiation has caused incomplete control rod insertion in some PWR designs. During routine monthly testing, variations had been observed in control rod drop time, although the specification had at no time been violated.

The NSC brief was that no modifications to the actual control rod mechanism would be made. The full experiment performed has been described previously [2]. A combination of the built-in drop time measurement facilities, which are used during monthly testing, and are initiated and stopped by micro-switches for the top and bottom of rod travel, and optical sensors scanning regularly spaced marks on the control blade tape are used. These together give the rod drop profile can be obtained (for the coarse rods), although this is subject to some manual data assessment due to data logging with the MCA. Nevertheless, neither of these methods has indicated any trend in control blade drop times, which remain within specification.

However, in an effort to gauge the behaviour during the first part of the control blade insertion, plans are underway to develop a new measurement system that monitors the time between the scram initiation and 50-60% insertion; the most important part of the shutdown. The ideal situation would be a measurement of the trip signal initiation to 50% insertion. A method of ascertaining this is under development.

8. Replacement and Upgrades of Reactor Control System.

The Reactor has now been operating safely for almost 33 years. During this time various equipment upgrades have taken place and routine maintenance programmes have been carried out based on the best advice available, good engineering practice and previous operational experience. These programmes have been adapted throughout the lifetime of the Reactor to ensure that up-to-date practices and modern advances are followed. The Reactor Site Licence formally requires that safety documentation is developed to demonstrate the safety of all Reactor operations and that there is a periodic review of all such safety documentation. These are not new requirements but have lead to an ongoing review of the nucleonic instrumentation and safety circuits in order to demonstrate that they will continue to perform reliably with safety maintained, or indeed enhanced, for further operation of the Reactor.

The Reactor control system utilises 108 PO 3000 type relays. These were designed originally for use in telephone exchanges and as such operate many times during the working day. In the Reactor control system they operate on average twice a day. No failures have ever been reported in the operating life of the Reactor. Data was obtained to give reassurance as to their expected reliability and lifetime. This was further reinforced by physical testing and maintenance performed in-house. Data has also been obtained on cable ageing in order to provide reassurance for future operation. Again, in-house testing and checking of cable integrity was performed in order to reinforce these findings.

There are five independent power monitoring instrumentation channels. Each channel consists of a module containing several of the following units: power supply, EHT supply, amplifiers, alarm units and trip units. This instrumentation had been replaced over a period of time in the early 1980s, but is now ageing and could give rise to potential maintenance problems, as some of the components they use are no longer obtainable. Complete modules are also not available to buy "off the shelf", and it would be extremely expensive and time consuming to have a suite of new instrumentation built to order by an outside supplier. As the original circuit diagrams and technical documents for each unit were available, it was decided to build new units to the original designs that would be updated to utilise modern components and reflect modern practices and design advances. The new units are built in-house, although an external consultant provides the updated designs and component schedules. Soak testing of each new unit prior to installation is also carried out externally to the original test schedules. Units are built, tested and installed individually so that, over a period of time, the whole instrumentation suite will be replaced. Old replaced units are then refurbished and kept as spares. The replacement strategy has concentrated on

firstly replacing those units where component degradation has been observed or suspected. The progress of the replacement programme for instrumentation channel modules is shown in Table 1. Currently a new unit is undergoing soak testing by the consultant electronic engineer, and will then be installed in Shutdown Amplifier 2 when appropriate.

Unit Type	N°. of Units Replaced	N°. of Units Awaiting Replacement
Pulse Channel:	1	4
Log d.c. Channel:	1	4
Shutdown Amplifier 1:	2	2
Shutdown Amplifier 2	1	3
Linear Channel	1	3

Table 1. Progress With Power Monitoring Channel Instrumentation Replacement

It is planned to continue with the replacement of all units in the instrumentation system and to speed up the process in order to complete this within the next few years. Other items within the control system will also be replaced including a power transformer/converter and several more of the contactors. Other, more minor, items in the control and instrumentation systems will be addressed as and when appropriate. Various other ancillary items connected to the control and instrumentation systems have already been changed in recent years. These include: chart recorders measuring Reactor power, chart recorders for temperature and activity monitoring systems, alarm bell timers, associated switches, and contactors in motor driven systems. Great attention has also been paid to the Reactor cooling system. This has undergone a great deal of refurbishment with parts being cleaned, replaced or modified as necessary.

It is believed that these actions, together with the appropriate documentation required, will enable the CONSORT Reactor to continue to be operated safely, and indeed with safety enhanced, for the foreseeable future.

9. Conclusions

It is a busy time at the Imperial College CONSORT Reactor centre, with a great deal of work being done to maintain this strategic facility for the future. The production of the enhanced safety case will produce a case for operating the Reactor for the next ten years, before a full review is due again. A rolling programme of component replacement is continuing, and has been very successful to date. Reactor operations have been maintained and no major problems have been identified. Refuelling plans are being considered.

10. References

[1] G.D.Burholt, T.D.MacMahon, "The University of London Reactor Centre, Ascot, England", J.Radioanal. Chem. 53(1-2), 1979, p 365.

[2] J.O'Connell, R.Miller, Proc. Intl. Topical Sem. Management of Ageing of Research Reactors, Hamburg, Germany, 1995, IAEA-SR-190/34, p 343.

[3] W.L.Woodruff, Argonne National Laboratory, USA.

[4] "Safety Assessment of Research Reactors and Preparation of the Safety Analysis Report", IAEA Safety Series No. 35-G1, 1994.

[5] "Safety Assessment Principles for NPPs", HSE, 1992.

[6] "Tolerability of Risk from Nuclear Power Stations", HSE, 1992.

DETERMINATION OF FISSION AND ACTIVATION PRODUCTS IN NEARLY FRESH FUEL ELEMENTS BY SELF-CALIBRATION

Klaas van der Meer
Fuel Research Department
SCK•CEN, Boeretang 200, B-2400 Mol, Belgium

CH0100351

and

André Beeckmans De Westmeerbeeck
Pol Gubel
BR2 Department
SCK•CEN, Boeretang 200, B-2400 Mol, Belgium

ABSTRACT

Gamma spectra at several axial positions of the BR02 fuel element X133 have been measured and the concentration of ^{137}Cs has been determined directly. On basis of this determination and some assumptions of the irradiation history the concentrations of other fission products, relevant for the cold reprocessing process, have been calculated.
On basis of ORIGEN-type calculations the concentration of some relevant transuranics has been estimated.
Both the concentrations of the fission products and of the transuranics appeared to be below the threshold values. Therefore it could be decided that cold reprocessing was feasible for all old BR02 fuel elements.

1. Introduction

In the framework of a possible cold reprocessing of old BR02 fuel elements it was required by the manufacturer to have an estimate of the concentrations of several fission and activation products in the fuel elements. For safety reasons these concentrations have to be below certain threshold values.
Of all the present BR02 fuel elements the element X133 appeared to have the highest activity and has therefore served as a reference for the maximum allowable concentration of fission and activation products.

2. Measurement equipment

Figure 1 shows a scheme of the measurement set-up. The gamma detector is an n-type high purity Ge-detector, Canberra model GC 1018-7500 SL with 10% efficiency and peak width FWHM <1.8 keV. The high voltage supply is a Canberra model 3106D and the amplifier is a Canberra model 2025. The ADC is a Canberra model 8713 and the MCA is an Accuspec-B master card connected to a PC with a 80486 microprocessor.
The measurement set-up is a preliminary set-up. The positions of both the Eu calibration source and the fuel element are shown.

3. Measurement method

Gamma-spectra have been taken at equidistant positions in the axial direction of the fuel element. Before and after these measurements a Eu source with known activity has been measured for the absolute calibration of the measurement set-up.
The different peaks in the gamma-spectra have been analyzed, based on fitting with a Gaussian curve with eventually corrections for high and low tailing. Peaks of ^{60}Co, ^{137}Cs and ^{235}U have been found.
To obtain the average concentration of ^{137}Cs in fuel element X133 the peak area A measured at the central position of the fuel element has been corrected for the following effects:

- geometry and energy efficiency ε of the Ge-detector
- branching ratio BR
- self-shielding SH
- part of fuel seen by detector PF =(20mm/760mm)x2.347 (see chapter 4.2.)
- shape factor SF
- uranium mass M_U

The branching ratio is the probability that a gamma photon is emitted when an isotope decays.
The self-shielding factor takes into account the absorption of the gammas in the fuel element itself and is indeed dependent on the energy of the gammas.
The shape factor takes into account the flux distribution in the reactor, which causes higher neutron fluxes and therefore higher fission rates (fission product content) at midplane of the fuel element than at the outer points. It is defined as the ratio of the fission product content at midplane and the average fission product content of the complete fuel element.

The average concentration of ^{137}Cs $C(^{137}Cs)$ is calculated with the following expression:

$$C(^{137}Cs) = \frac{A}{\epsilon.PF.BR.SH.SF.M_U}$$

The other fission products of interest have been calculated on basis of the ^{137}Cs concentration and the respective decay constants and fission yields Y.

$$C(X) = C(^{137}Cs)\ \frac{Y_X}{Y_{Cs}}\ \frac{e^{-\lambda_X t}}{e^{-\lambda_{Cs} t}}$$

t is the decay time after end of irradiation, taken as 13 year.

The transuranics have been calculated on basis of the ^{137}Cs concentration and a calculation of the fission and activation products content in an irradiated fuel element with a burn-up of 16% FIMA.
The following expression has been used:

$$C(TU) = C(^{137}Cs)\ \frac{A_{calc}(TU)}{A_{calc}(^{137}Cs)}\ \frac{e^{-\lambda_{TU}\Delta t}}{e^{-\lambda_{Cs}\Delta t}}$$

Where Δt is the difference between the assumed cooling time (13 years) and the cooling time assumed in the calculation (100 days) and A_{calc} is the calculated activity.

4. Measurement results

4.1. Determination of the detector efficiency

Table 1 contains the results of the measurements on the Eu source. The reported activity of the used Eu calibration source is 43.6 10^4 Bq (1%) at 01-01-1992.
From the results listed in table 1 and the reported activity the absolute efficiency curve of the Ge-detector has been determined by a least square fit of the data. The following expression has been obtained:

$$\ln(\epsilon) = A + B.\ln E + C.\ln^2 E$$

with ε detector efficiency
E gamma energy (MeV)
A,B,C fitting parameters, having values of -8.88064, -1.01883 and -0.0935252, resp.

4.2. Determination of the part of the fuel seen by detector PF (self calibration of the fuel element)

Based on three gamma energies of ^{235}U a correction factor for PF of 2.347 has been found. This is calculated as follows:
the amount of ^{235}U in the fuel element is 241.12 g. The total activity of this amount (λN) is equal to

$$\lambda.N = 3.123\ 10^{-17} * 241.12\,g * \frac{6.023\ 10^{23}}{235} = 19.3\ 10^{6}\ Bq$$

The measured activity of ^{235}U is calculated by way of the next expression:

$$C(^{235}U) = \frac{A}{\epsilon.PF.BR.SH}$$

The shape factor SF is not used here, since the ^{235}U content is homogeneously distributed in the axial direction of the fuel element.
The factor PF is taken here preliminary as 20/760. Table 2 shows the used values and the results.

Table 1. Results of the gamma-spectra analysis of the Eu source

energy (keV)	peak area (c/s)	uncertainty (1σ) (c/s)
121.78	88.282	0.6
244.7	16.882	0.2
344.28	42.024	0.3
411.13	3.081	0.12
443.97	3.820	0.12
778.9	9.243	0.2
867.39	2.798	0.1
964.06	8.553	0.2
1085.84	5.394	0.1
1112.09	6.809	0.13
1408.02	8.775	0.17

Table 2. Used values and results for the calculation of $C(^{235}U)$

gamma energy (keV)	detector efficiency ϵ ($*10^{-4}$)	branching ratio BR	gamma self-shielding SH	peak area A (c/s)	$C(^{235}U)$ ($*10^{6}$ Bq)
163.4	6.47819	0.05	0.496993	19.22	45.369
185.7	5.92938	0.575	0.553152	228.68	46.078
205.3	5.51984	0.05	0.595072	19.213	44.454

The average value for $C(^{235}U)$ is 45.3 10^{6} Bq. Comparing this with the calculated ^{235}U activity results in a correction for PF of 2.347. Figure 1b shows that this factor is acceptable from geometrical point of view (areas (I+II)/area I).

4.3. Determination of ^{137}Cs activity

The results of the measurements on the fuel element are shown in table 3.

The corrections for converting the measured peak area of ^{137}Cs into the activity per gram U are shown in table 4.

Table 3. Results of the gamma-spectra analysis of fuel element measurements

isotope	energy (keV)	peak area at maximum activity (c/s)	uncertainty (1σ) (c/s)
^{137}Cs	661.66	27.556	0.27
^{235}U	143.8	37.450	0.42
^{235}U	163.4	19.220	0.33
^{235}U	185.7	228.68	0.79
^{235}U	205.3	19.213	0.26

This results in an ^{137}Cs activity of 8082 Bq/g ^{235}U.

4.4. Calculation of the activity of other fission products

Table 5 shows the calculated activities of the fission products. The activities of ^{90}Sr, ^{147}Pm, ^{144}Ce, ^{106}Ru and ^{125}Sb have been calculated on the assumption that the irradiation took place 13 years ago (1983). This assumption is conservative. The uncertainty of the measured ^{137}Cs activity is estimated to be 5%.

Table 4. Correction factors for the conversion of the ^{137}Cs peak area into activity

correction factor	value	uncertainty
part fuel seen by detector	$6.1763\ 10^{-2}$	$7.5\ 10^{-4}$
branching ratio	0.852	0.001
self-shielding	0.8007	0.03
detector efficiency	$2.0845\ 10^{-4}$	$2.7\ 10^{-6}$
shape factor of flux	1.61	0.032
^{235}U mass	241.12 g	-

4.5. Calculation of transuranics

Table 6 shows the calculated and estimated activities of the transuranics. They have been determined on basis of an ORIGEN-like calculation of the fission and activation product content of a BR2 fuel element with a burn-up of 16% FIMA [1]. Since the burn-up of fuel element X133 is very low (<<16% FIMA) and the relative concentration of multiple activation products increases with the burn-up, this methodology is (very) conservative.

No peaks of ^{232}U have been observed.

Table 5. Activity concentrations of several fission products

isotope	half life (year)	fission yield (%)	decay correction ($e^{-\lambda t}$)	activity (Bq/gU)
^{137}Cs	30.17	6.183	0.742	8082
^{90}Sr	28.5	5.772	0.729	7413
^{147}Pm	2.62	2.270	0.0321	128
^{144}Ce	0.78	5.493	$9.57\ 10^{-6}$	0.09
^{106}Ru	1.01	0.4019	$1.31\ 10^{-4}$	0.09
^{125}Sb	2.77	0.0292	0.0387	2.0

5. Discussion

The calculation of the concentration of the fission products based on the measured ^{137}Cs concentration has been performed conservatively for at least two reasons:

1- the irradiation took probably place longer ago than 13 year. Since ^{137}Cs has the longest half life of the fission products considered, this leads to an overestimation of the concentration of the other fission products

2- the decay during irradiation has not been taken into account. For the same reason as in 1- this leads to an overestimation for the other fission products

Table 6. Calculated activities of relevant transuranics based on measured ^{137}Cs activity

isotope	calculated activity [1]	estimated activity (Bq/gU)
^{238}Pu	5.642 10-3	0.180
^{239}Pu	1.522 10-2	0.537
^{240}Pu	1.648 10-3	0.058
^{241}Pu	5.259 10-2	1.030
^{137}Cs	308.0	8082

The calculation of the concentration of the transuranics has been based on very conservative grounds.

- The calculation in reference [1] has been performed for fuel with a considerable burn-up, while the burn-up of fuel element X133 is practically not existent. This will give a large overestimation of the activation product content relative to the fission product content
- for reasons of easiness the calculation has been performed with a higher percentage of ^{238}U than in reality is present in a fuel element. This will overestimate the amount of activation products with about 20%.

The used methodology has been verified by calculating the known amount of ^{235}U on basis of the measured

gamma peaks. It appeared that the measured amount was 235% higher than the real amount. This has been attributed to the fact that a rather wide collimator opening has been used so that the detector can look partly to the adjacent parts of the considered fuel area. The results for the ^{137}Cs activity measurement have been corrected for this effect.

6. Conclusions

The ^{137}Cs concentration is 8082 Bq/gU. The total activity of the 6 considered fission products is 15625 Bq/gU. The conservatively estimated concentration of all transuranics is 1.805 Bq/gU. These values are significantly below the threshold values for cold reprocessing.

7. Acknowledgements

Thanks are due to Mr. L. Borms and Mr. V. Willekens for the execution of the measurements and their aid with the interpretation of the measurement results.

8. References

[1] André Beeckmans, SCK•CEN internal note ABW/199/A0140/D2742, 8 February, 1994

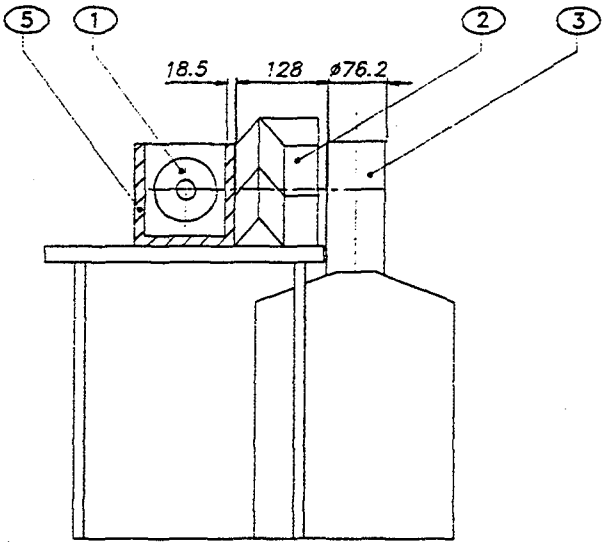

Fig 1a : Cross-section A–A of the measurement set-up.

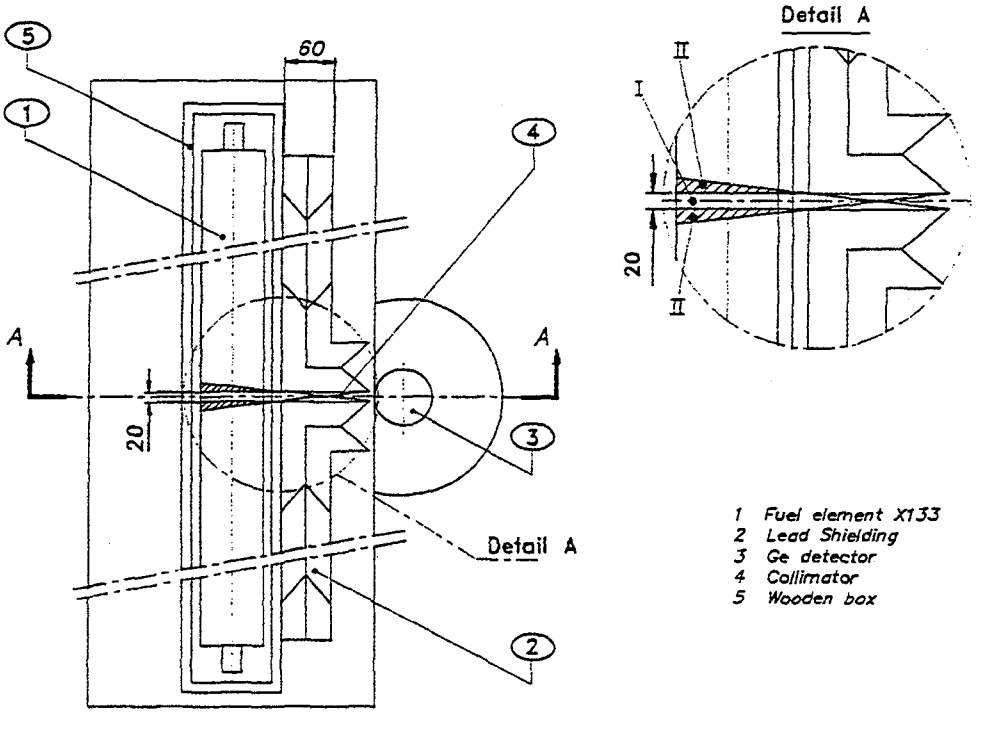

Fig 1b : Upper view of the measurement set-up.

CH0100352

PHASE STABILITY OF HIGH-DENSITY Al - U-10wt.%Mo FUEL WITH CENTRIFUGALLY ATOMIZED POWDER AT ELEVATED TEMPERATURE

KI-HWAN KIM, HYUN-SUK AHN, JONG-MAN PARK, CHANG-KYU KIM, DONG-SUNG SOHN

Korea Atomic Energy Research Institute, 150 Dukjin-dong, Yusong-gu, Taejon 305-353, South Korea

ABSTRACT

The phase stability of atomized U-10wt.%Mo powder and the thermal compatibility of dispersed fuel meats at elevated temperature were characterized. Atomized U-10wt.%Mo powder generally had a good γ-U phase stability during annealing at elevated temperatures. It is thought that the stability was related to supersaturation of substitutional molybdenum atoms in the metastable γ -U solid solution of atomized U-10wt.%Mo powder. The penetration mechanisms of the atomized U-10wt.%Mo particles at 500°C were classified as (a) through phase interface, leaving a kernel-like unreacted island, (b) through cell boundaries, showing several unreacted islands and more reacted regions. It is supposed that such islands originated from the decomposition of γ -U solid solution. The intermediate layer thickness and volume increase of the dispersion U-10wt.%Mo fuel specimens were almost the same as those of U_3Si_2 fuel, independent of annealing time.

1. Introduction

The conversion from high enriched uranium (HEU) to low enriched uranium (LEU) for use in research reactor fuel requires a large increase in the fissile uranium per unit volume to compensate for the reduction in enrichment. U_3Si_2 is found to possess very stable irradiation behavior, but the difficulties in rolling fuel meat do not allow loading higher than 6 g-U cm^{-3} [1-5]. Hence, in the renewed fuel development for research and test reactors, attention has shifted to high density uranium alloys. Early irradiation experiments with uranium alloys showed the promise of acceptable irradiation behavior if these alloys could be maintained in their cubic γ-U crystal structure [6]. It has been reported that high density atomized U-Mo powder prepared by rapid solidification has the metastable isotropic γ-U phase supersaturated with substitutional molybdenum, especially in U-10wt.%Mo alloy [7]. If the centrifugally atomized U-Mo powder can retain this gamma phase during fuel element fabrication and irradiation, and if it is compatible with aluminum matrix, the uranium alloy would be a prime candidate for dispersion fuel for research reactors.

In this study U-10wt.%Mo alloy powder which has high density above 15 g-U cm^{-3} was prepared by rotating-disk centrifugal atomization. The fuel rods were made by extruding the blended powders with atomized U-Mo and aluminum. The γ-U phase stability of atomized U-10wt.%Mo powder and the thermal compatibility of atomized U-10wt.%Mo-Al fuel meats during annealing at elevated temperatures have been examined.

2. Experimental Procedure

Depleted uranium lumps with 99.9 % purity and molybdenum buttons with 99.7 % purity were induction-melted in a graphite crucible coated with a high-temperature-resistant ceramic. The molten U-10wt.%Mo alloy was fed through an orifice onto a rotating graphite disk in an argon atmosphere. In order to obtain the

desired size distribution and shape, the atomization parameters were adjusted [8]. The atomized powder was collected in a container at the bottom of the funnel-shaped chamber. Dispersion fuel rods were prepared by extruding the blended powders of U-10wt.%Mo and aluminum at a working temperature of 400°C. Atomized powder and compatibility specimen containing 45 vol.% of U-Mo particles were annealed for an incremental times at 400°C and 500°C. After each annealing interval, the dimensional changes of the specimens were measured.

The samples were polished to 0.3 μm diamond paste, and examined by a scanning electron microscope (SEM) to characterize the microstructure of the atomized particles and the fuel meats. Electron-probe micro-analysis (EPMA), energy dispersive spectrometry X-ray analysis (EDX), and X-ray diffraction analysis (XRD) using Cu K_α radiation were also used to determine the chemical composition and the phase of the samples.

3. Experimental Results

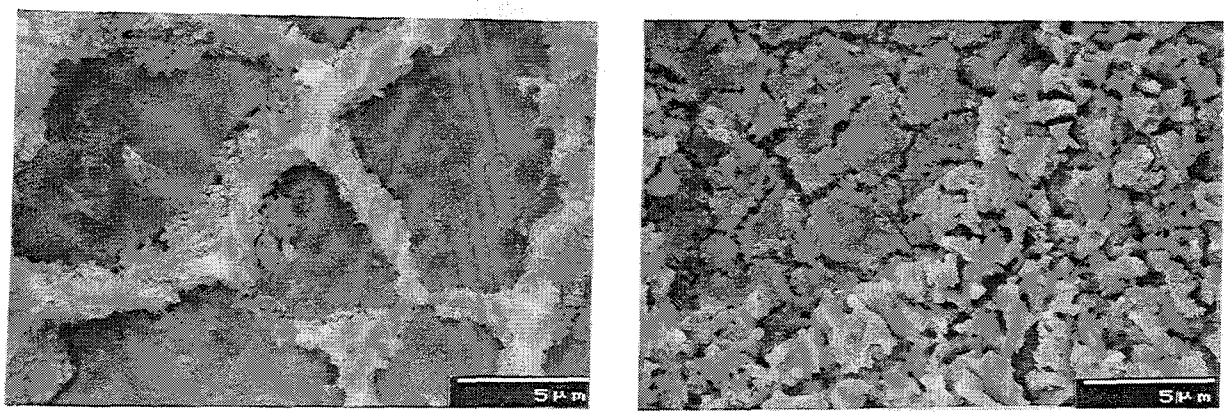

Fig. 1. Back-scattered scanning electron images of the annealed fuel samples after annealing; (a) 400°C, (b) 500°C.

The γ-U phase of U-10wt.%Mo powder annealed at 400°C untill 100 hours remained as it were [7]. However, the micrograph of the U-10wt.%Mo powder after 350 hours showed fine γ-U cell structure with decomposed α-U and γ'-U_2Mo phases around the cell boundary (Fig. 1-(a)). The X-ray diffraction pattern of the atomized U-10wt.%Mo powder showed that the major phase of U-Mo powder after 350 hours was γ-U phase. Some γ-U phases were decomposed as coarse α-U and γ'-U_2Mo phase after annealing. The micrograph of U-10wt.%Mo powder annealed at 500°C after 24 hours showed fine γ-U cell structure with fibric structure of decomposed phases. Most γ-U cells of atomized U-10wt.%Mo powder after annealing for 500 hours were already decomposed as coarse α-U and γ'-U_2Mo phase (Fig. 1-(b)). The X-ray diffraction pattern of the atomized U-10wt.%Mo powder showed that half of the γ-U phase of U-10wt.%Mo powder after 100 hours remained as it were; however the greater part of the γ-U phases of U-10wt.%Mo powder after 500 hours was decomposed as the α-U phase and the γ'-U_2Mo phase, including some γ-U phase. Fig. 2 shows the dimensional changes of the Al - 45vol.% U-10wt.%Mo fuel samples at 500°C for various times. Half of the swelling in the fuel samples at 500°C occurred within 10 hours, so the swelling appeared to reach a plateau gradually with annealing time. The intermediate phase layer formed around the interface between U-10wt.%Mo fuel and aluminum matrix increased in proportion to square root with annealing time. The volume change of the dispersion fuel specimens was less than that of Al - U_3Si_2 dispersion fuel specimens for the same time, independent of annealing time. Even after annealing for 500 hours the Al - U-10wt.%Mo dispersion fuel samples did not show a large volume increase, up to 34%.

Back-scattered scanning electron images of the fuel samples after annealing at 500°C for 200 hours are

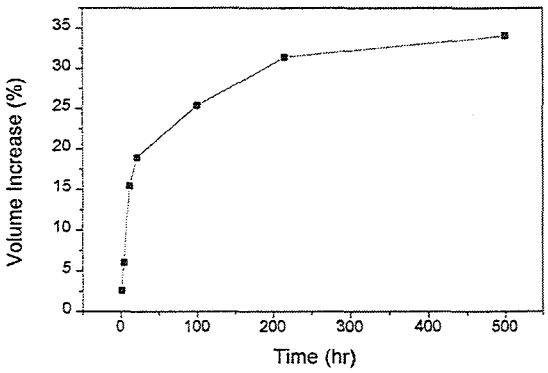

Fig. 2. The dimensional increase of the Al - 45vol.% U-10wt.%Mo fuel samples at 500°C for various times.

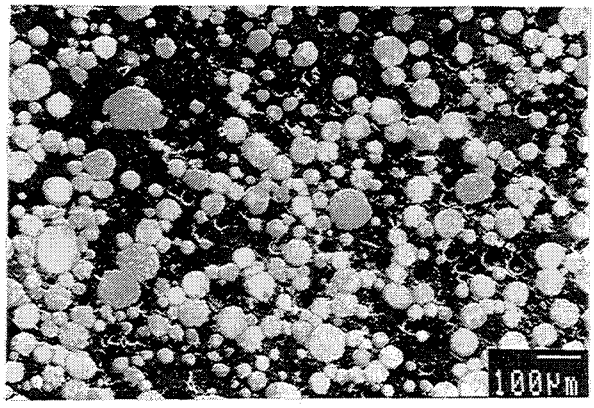

Fig. 3. Back-scattered scanning electron images of the fuel samples after annealing at 500°C for 200 hours.

shown in Fig. 3. The region of the fuel samples imaged in Fig. 2 may be divided into two general areas: (a) islands with white, (b) dark-grey regions. Metallographic examinations of the samples showed that most particles exhibited an irregular interface and a rim of an intermediate phase in the circumferential region. Fine particles had several unreacted islands (white), and reacted intermetallic compounds (dark-grey) as a matrix in the U-10wt.%Mo particles. The fuel meats showed two aspects of the penetration with aluminum atoms. The particles were composed of a considerable amount of reacted areas around the circumferential part and generally had a "kernel-like" structure with an unreacted island, and several unreacted islands. The penetration degree of most atomized particles with a kernel-like structure did not reach a half of particle cross-section despite of long annealing at elevated temperature. The area scan analyses of the U-10wt.%Mo samples annealed for 200 hours, by using energy dispersive X-ray spectroscopy (EDX), indicated that white regions were composed of 81 at.%U, 17 at.%Mo and 2 at.% Al, whereas dark-grey regions consisted of 20at.%U, 4 at.%Mo and 75 at.%Al, that is, $(U,Mo)Al_3$. Uranium-aluminide with a small amount molybdenum, mainly UAl_3 was formed in the U-Mo particles due to the diffusion of Al atoms. Electron probe micro-analysis (EPMA) traces of the fuel sample also confirmed that there was some formation of intermediate phase regions between U-Mo particle and Al matrix. The atomized U-10wt.%Mo particle had more unreacted regions, compared with the atomized U_3Si_2 particle. It led to a volume change of 31% which was less by 8% than that of the atomized U_3Si_2 fuel samples (Fig. 1) [9].

4. Discussion

By rapid solidification in terms of centrifugal atomization from the melt, the centrifugally atomized powder retained a gamma phase as metastable state. However, the γ-U phase of U-10wt.%Mo alloy annealed below the eutectoid temperature (560°C) had a tendency to be decomposed as the thermodynamically stable lamellar structure including α-U and γ'-U_2Mo phases [10]. A scanning electron micrograph carried out on the U-10wt.%Mo powder annealed at 400℃ untill 100 hours, illustrated that U-10wt.%Mo powder revealed a fine grain structure below 3 ㎛ in size with microsegregation of molybdenum atoms [7]. These results were resulted from supersaturation of Mo in the metastable γ -U solid solution of U-10wt.%Mo alloy. Large content of substitutional Mo atoms with low diffusivity caused the migration of U atoms difficulty, and inhibited the decomposition and the coarsening of γ -U. This confirmed that the γ - U phase of atomized U-10wt.%Mo powder could be retained at 400℃ for an extended time, presumably because the diffusion-controlled transformation is retarded at increased Mo content. Fine laminae were

nucleated primarily at γ-U cell boundary at 400°C (Fig. 1). γ-U in the cells is decomposed as α-U and γ-U with high Mo content than γ'-U_2Mo phase as would be expected for normal eutectoid reaction [11-12]. Then transformation occurred continuously involving the formation of ordered intermediate phase (γ'). However, the decomposition of γ-U at 500°C took place primarily by the cellular mechanism [13].

As the aluminum reacts with the fuel, the fuel's volume increases due to the difference between densities of the original particle and reaction product, and due to the pores produced by the Kirkendall effect [14]. The volume of the U-10wt.%Mo dispersion fuel sample annealed at 400℃, remained the same even after 2000 hours anneal, without formation of intermediate phase layer [15]. However, the swelling of this U-10wt.%Mo fuel sample after annealing at 500℃ for 200 hours showed a larger amount up to 31%, with formation of (U,Mo)Al_3 of 8 μm in thickness. The increase in annealing temperature accelerated the penetration rate of aluminum atoms in the fuel particles. The U-10wt.%Mo dispersion fuel samples did not show a smaller volume increase, compared with that of U_3Si_2 dispersion fuel specimens. The possible reason can be supposed as follows. It is thought that such results originated from larger atomic radius and lower diffusivity of supersaturated substitutional molybdenum atoms in the metastable γ-U solid solution, relative to those of silicon atoms. In addition, large content of Mo atoms caused the migration of U atoms difficulty and inhibited the great decomposition and coarsening of γ-U. Molybdenum atoms supersaturated in the grain boundary inhibited the diffusion of aluminum atoms which proceeds along the grain boundary into the U-10wt.%Mo particle. In the initial stage of annealing at 500℃, atomized U-10wt.%Mo particles showed a thin kernel-like intermediate phase layer around the perimeter, penetrated through a phase interface. However, after the middle stage of annealing at 500℃, atomized U-10wt.%Mo particles sometimes had several unreacted islands, showing more reacted regions. It is supposed that such several islands were related to the decomposition of γ-U solid solution. The phase decomposition led to lamellar structure of α-U and γ'-U_2Mo phases, providing large numbers of nucleation sites and growth routes due to greater interface area.

5. Conclusions

The phase stability of atomized U-10wt.%Mo powder and the thermal compatibility of dispersed fuel meats at elevated temperatures were characterized.

1) After annealing at 400°C for 350 hours atomized U-10wt.%Mo powder showed fine γ-U cell structure with decomposed α-U and γ'-U_2Mo phases only around the cell boundary. However, the greater part of γ-U phases of atomized U-10wt.%Mo powder annealed at 500°C for 500 hours was already decomposed as α-U and γ'-U_2Mo phases, with some retained γ-U phases. It is thought that the stability was related to supersaturation of substitutional molybdenum atoms in the metastable γ-U solid solution of atomized U-10wt.%Mo powder.
2) The intermediate phase, formed by interdiffusion between atomized U-Mo particle and aluminum matrix after annealing at 500°C, was (U,Mo)Al_3.
3) In the initial stage of an annealing at 500℃, atomized U-10wt.%Mo particles showed a thin kernel-like (U,Mo)Al_3 layer around the perimeter, penetrated through a phase interface. However, after the middle stage of annealing, atomized U-10wt.%Mo particles sometimes had several unreacted islands, showing more reacted regions. It is supposed that such several islands originated from the decomposition of γ - U solid solution.
4) The intermediate layer thickness and volume increase of the dispersion U-10wt.%Mo fuel specimens were almost the same as those of U_3Si_2 fuel, independent of annealing time. Even after annealing for 500 hours the Al - U-10wt.%Mo dispersion fuel samples did not show a large volume increase, up to 34%.

References

[1] S. Nazaré, J. Nucl. Mater., 124 (1984) 14.
[2] G. L. Hofman, J. Nucl. Mater., 140 (1986) 256.
[3] R. C. Birther, C. W. Allen, L. E. Rehn and G. L. Hofman, J. Nucl. Mater., 152 (1988) 73.

[4] J. P. Durand, Proc. of 18th International Meeting on Reduced Enrichment for Research and Test Reactors, Paris, France, 1995.
[5] J. P. Durand, P. Laudamy K. Richer, Proc. of 18th International Meeting on Reduced Enrichment for Research and Test Reactors, Williamsburg, USA, 1994.
[6] G. L. Hofman and L. C. Walters, Materials Science and Technology, Vol. 10A, Nuclear Materials, ed. B. R. T. Frost (VCH Publishers, New York, 1994).
[7] K. H. Kim et al., J. Nucl. Mater., 245 (1997) 179.
[8] K. H. Kim et al., J. Nucl. Sci. & Tech., 34 (1997) 1127.
[9] K. H. Kim et al., Proc. of 20th International Meeting on Reduced Enrichment for Research and Test Reactors, Jackson-Hall, US, 1997.
[10] Konobeevskin et al, Proc. of the Second International Conference on the Peaceful Uses of Atomic Energy, Geneva, Switzerland, (1958).
[11] G. D. Sandrock, J. A. Perkins, and R. F. Struyve, Scr. Met., 6 (1972) 507.
[12] K. H. Eckelmeyer, Microstrutural Structure, Vol. 7, eds. McCall (Fallen, 1977).
[13] H. E. Cook, Acta Met., 18 (1970) 275.
[14] J. Burke, in: The Kinetics of Phase Transformation in Metals (Pergamon Press, Oxford, 1965) pp 184-195.
[15] D. B. Lee et al., J. Nucl. Mater., 250 (1997) 79.

CH0100353

FUEL MANAGEMENT AND OPERATION OF THE SOLUTION FUEL CRITICAL FACILITIES

K. OGAWA, A. OHNO, H. SONO, H. HIROSE, K. SAKURABA, S. ONODERA, T. MORITA, H. ARISHIMA, E. AIZAWA, T. TAKAHASHI, S. SUGIKAWA and M. MIYAUCHI

Department of NUCEF Project
Japan Atomic Energy Research Institute
2-4 Shirakata, Tokai-mura, Naka-gun, Ibaraki-ken 319-11, JAPAN

ABSTRACT

For design and operation of reprocessing plant, the criticality safety control is one of the important requirements. JAERI has two solution fuel critical facilities, the STACY and the TRACY, in NUCEF. The STACY aims to provide benchmark data on critical mass of solution fuel such as low enriched uranium nitrate solution, plutonium nitrate solution and mixture of both. The purpose of the TRACY is to obtain the data on a postulated critical accident phenomena with low enriched uranium nitrate solution. Prior to experiments with the STACY and the TRACY, concentration and nitric acid molarity of solution fuel are analyzed for their safety operation. In this paper, the outline of both facilities, management of solution fuel, results obtained in reactor operations and future program are shown.

1. Introduction

JAERI(Japan Atomic Energy Research Institute) has constructed two experimental facilities, the STACY(Static Experimental Critical Facility) and the TRACY(Transient Experimental Critical Facility), in NUCEF(Nuclear Fuel Cycle Safety Engineering Research Facility).[1] The STACY experiment is conducted to obtain the data of critical mass of low enriched uranium nitrate solution, plutonium nitrate solution or their mixture under various fuel conditions and core configurations. [2] Criticality control of the STACY is made by feed and drainage of the solution fuel to the core tank. The STACY went its first critical on February 23rd, 1995 and conducted over 130 critical operations up to present with 10% enriched uranium nitrate solution. On the other hand, the purpose of the TRACY is to obtain the data not only on nuclear and hydraulic transient characteristics but also on confinement capability of radioactive materials in a postulated critical accident. In the TRACY operation, fuel composition, reactivity insertion rate, total insertion reactivity and initial neutron density can be varied as experiment parameters. [3] In the supercritical operations, excess reactivity can be inserted up to 3$ by withdrawal of a transient rod or continuous feed of the solution fuel to the core tank. The TRACY achieved its first criticality on December 20th, 1995 and 77 operations including 26 supercritical operations were carried out by the end of 1997. The solution fuel management for both facilities is basically made by the fuel treatment system in NUCEF, where concentration of fissile materials and composition of uranium, plutonium and neutron poison materials in the fuel solution are changed.

2. Critical facilities

2.1 STACY

Major specification of the STACY is shown in **Table 1. Figure 1** shows the schematic diagram of the STACY. The core tank made of stainless steel is replaceable and is installed in a reflector pool. Safety rods for emergency shutdown and a contact type height gauge for measurement of solution height are installed on the top of the core tank. A neutron source, Am-Be, is inserted under the bottom of the core tank. Neutron detectors are fixed around the core tank. Major feature of the STACY is a replaceable core tank so that measurements of critical mass are applicable to core tanks

of various shapes and sizes.

In an operation, the reactivity is controlled by changing a solution height by feeding and draining the solution fuel. The fuel is fed into the core tank by steps with monitoring the reactor power by the neutron counters. A critical height is measured by the contact type height gauge of which accuracy is ± 0.2mm.

2.2 TRACY

Major specification of the TRACY is shown in **Table 3. Figure 2** shows a schematic diagram of the TRACY. A core tank made of stainless steel is annulus with outer and inner diameter of 50cm and 7.6cm, respectively. The core tank is approximately 2m high. Arrangement of safety rods, a contact type height gauge, neutron detectors and a neutron source are the same as those of the STACY. A transient rod for insertion of excess reactivity is installed in the center of the core tank. In a supercritical operation of the TRACY, radioactive gases including fission products are generated in the core and they are circulated for at least 24 hours in a closed-loop vent gas line system to reduce radioactivity in the system. In addition to radioactive gases, hydrogen and oxygen gases are also generated by radiolytic decomposition of water in the solution fuel. They are diluted in a dilution tank of 11 m^3 and converted into water in a recombiner for prevention of a hydrogen explosion. Concentration of these gases including aerosol, hydrogen, mist, NO_X and iodine are measured by the samplers with multi-layer filters and other devices.

Before a transient operation, a static operation is done to make sure that the insertion reactivity worth is less than 3$. The critical approach is similar to that of the STACY. After evaluation of maximum addition reactivity, a transient operation can be proceeded with one of the following three modes.

(1)Pulse withdrawal mode; the transient rod is withdrawn within 0.2 second from the bottom to the top position(approximately 1.5 m) by pressurized air.

(2)Ramp withdrawal mode; the transient rod is withdrawn in a fixed speed, which can be set variably from 1 to 900 cm/min.

(3)Ramp feed mode; the fuel solution is fed continuously over the critical height by the feed pump of which flow rate can be set variably from 0.7 to 65 liter/min.

3. Fuel Management

3.1 Fuel Treatment System

For treatment of the solution fuel used in the STACY and the TRACY, the fuel treatment system like a small-scale reprocessing plant is operated. **Figure 3** shows a schematic flow of the fuel treatment system. The system mainly consists of dissolver, concentrator, extractor, scrubber and solution storage tanks. The 10% enriched uranium nitrate solution fuel for both the STACY and the TRACY is blended by dissolving 12% and 1.5% enriched uranium dioxide pellets. The 6% enriched uranium nitrate solution fuel is expected to be in the same manner. The plutonium nitrate solution fuel is also expected to be made by dissolution of MOX powder by electrolytic oxidation method. The operation capacities are 10kg a day for uranium and 1kg a day for plutonium. The concentration and composition of fissile materials and nitric acid molarity are adjusted to meet the purpose of critical experiments. Then the solution fuel is transferred to the dump tank of the STACY and the TRACY. After completion of the experiments, it is returned again to the fuel treatment system in order to adjust for the next experiments.

3.2 Treatment of Uranium Fuel

Before each operation, uranium concentration and nitric acid molarity in the solution fuel are analyzed to estimate a critical height for safety operation. The chemical analysis methods used are a mass spectrometry for uranium enrichment, an oxidation-reduction titration method for uranium concentration and a neutralization titration method for nitric acid molarity, respectively. The errors are within 0.3% for uranium enrichment, 0.2% for uranium concentration and 1.0% for nitric acid molarity.[4] Each error is calculated in terms of reactivity worth. In case of the cylindrical core with 60cm in diameter, they are 0.053% $\Delta k/k$ for uranium enrichment, 0.076% $\Delta k/k$ for uranium

concentration and 0.038% $\Delta k/k$ for nitric acid molarity, respectively. [5]

3.3 Surveillance of treated fuel solution

Critical mass mainly depends on concentration of fissile materials and nitric acid molarity in the solution fuel under the given geometry of the core. **Figure 4** shows the variation of the uranium concentration and nitric acid molarity. It is observed that the uranium concentration tends to increase for the STACY[6] and the TRACY. This is due to the evaporation of water in the solution fuel. In the uranium concentration of the TRACY shown in Fig.4, a sharp rise in the uranium concentration can be seen. This is caused by the evaporation of water in the solution fuel because of the high-energy operation. Volume of evaporated water in the solution fuel increases with temperature increase. After the supercritical operation(total energy 20MJ) in the ramp withdrawal mode, the solution fuel was kept in the core tank for 5 hours in subcritical condition. Volume of evaporated water in this operation was measured and was approximately 2 liter, corresponding to 2% of the core volume. And it made uranium concentration increase by 3.6g/liter. On the other hand, little change with time is observed in nitric acid molarity of solution fuel used in both critical facilities.

4. Results of operation

4.1 STACY

The first critical approach was done using 10% enriched uranium nitrate solution with uranium concentration of 310.1g/liter and nitric acid molarity of 2.0 mol/liter. The measured critical height was 41.5cm. The experimental condition is listed in **Table 4**. The typical result of critical height with various uranium concentrations is shown in **Fig. 5**. The critical solution height decreases with increase of uranium concentration in this experiment. The basic nuclear characteristics such as kinetic parameter and temperature effect were also measured. [2]

4.2 TRACY

The experimental condition is listed in **Table 5**. The peak power of the first pulse and the peak pressure in the core were measured in the pulse withdrawal mode with changing insertion reactivity up to 3$. **Figure 6** shows a relationship between the peak power of the first pulse and the inverse period. The peak power of the first pulse is proportional to the square of the inverse period in the range from 40 to $200s^{-1}$. As shown on parallel dotted lines in Fig.6, the peak pressure also appears to be proportional to the peak power. Typical power oscillation in the ramp feed mode was measured and shown in **Fig. 7**. As shown in this figure, the power increases with reactivity insertion and drops rapidly caused by the negative reactivity feedback of temperature and radiolytic gas void. The gas bubbles move upwards. Since the positive reactivity is added again, the second pulse appears. Consequently, power oscillation comes to continue until the reactivity inserted is compensated with the negative reactivity by temperature rise of the solution fuel.

5. Future program

In the STACY, critical operations using low enriched uranium nitrate solution will be continued with core configuration such as interactive cores and heterogeneous core. After uranium experiment, the STACY has the plan to carry out critical operations with plutonium nitrate solution or mixture of plutonium and uranium nitrate solution. As for the TRACY, supercritical experiments with water reflector are scheduled to make a comparison of the supercritical characteristics between with and without reflector. Concentration of gases including aerosol, hydrogen and iodine, which are released from a supercritical operation, will be measured for evaluation of source terms in a postulated critical accident. In the fuel treatment system, the plutonium dissolver will be constructed by the end of next year. A preliminary test for dissolving MOX powder is planned before. After completion of the critical operations, solution fuel is planed to be recycled in form of uranium oxide.

Acknowledgments

The authors are grateful to all the staffs of Criticality Technology Division, Criticality Safety

Laboratory and Analytical Laboratory of NUCEF. This work is carried out by the Japan Atomic Energy Research Institute under entrustment by the Science and Technology Agency(STA) of Japan.

References

[1]Takeshita.I, et al.: "Construction of New Critical Experiment Facilities in NUCEF", The 3rd JSME·ASME Joint International Conference on Nuclear Engineering (ICON-3), Kyoto, Japan, Vol.4, pp. 1881-1886, (1995)

[2]Miyoshi.Y, et al.: "Critical experiments on 10% enriched uranyl nitrate solution using a 60cm-diameter cylindrical core", J. of Nuc. Tech., vol.118, pp69-82,(1997)

[3]Nakajima.K, et al.: "Experimental Study on Criticality Accidents Using the TRACY", International Conference on the Physics of Reactors(Physor'96), Ibaraki, Japan, Vol.4, pp. L89-L92, (1996)

[4]Sonobe.T, et al.: Preprint 1996 Fall Mtg. of At. Energy Soc. of Jpn. A15[in Japanese]

[5]Tonoike.K, et al.: "New critical facilities toward their first criticality, STACY and TRACY in NUCEF", Proc. Of the Fifth International Conference on Nuclear Criticality Safety, Vol. II, 10.25, Albuquerque(1995)

[6]Sono.H, et al.: "Annual report of STACY in 1995", JAERI-Tech, pp. 34, (1997) [in Japanese]

Table 1 Major Specification of STACY

Maximum Power	200W
Fuel	(See Table 2) Initial Temperature: <40 ℃
Reflector	None, Water, Concreate, Borated concreate
Core	Shape: Cylinder diameter: 21～100cm Shape: Slab thickness:: 10～50cm, width: 70cm(fixed)
Maximum excess reactivity	0.8$
Reactivity insertion	Fuel solution feed

Table 2 Parameter Range of Fuel

Experimental core	Homogenious		Heterogeneous
	Basic core	Interaction core	
Fuel solution	Uranium Nitrate Concentration <500 g/liter Acid molarity <5 mol/liter 235U enrichment 6, 10%	U/Pu mixture Concentration <300 g/liter Acid molarity <5 mol/liter Pu enrichment 0～100% 240Pu ratio 5～25%	Uranium Nitrate Concentration <500 gU/liter Acid molarity <5 mol/liter 235U enrichment 6%
Fuel rod	-	-	PWR type fuel rod 235U enrichment5% Fuel rods:50-500 Volume ratio:1.9-15.0
Neutron poison	Gadolinium	-	Gadolinium

Table 3 Major Specification of TRACY

Maximum Power	Static Operation Mode: 10kW Transient Operation Mode: 5GW
Maximum Energy	32MJ/Experiment
Fuel	Uranium Nitrate Solution (10wt% 235U enrichment) Uranium Concentration: <500 gU/liter Nitric Acid molarity: <5 mol/liter Initial Temperature: <40 ℃
Reflector	None or Water
Core	Shape: Annular Inner Diameter: 8cm Outer diameter: 50cm
Maximum excess reactivity	Static Operation Mode: 0.8$ Transient Operation Mode: 3$
Reactivity insertion	Transient rod withdrawal or fuel solution feed
Maximum pressure	0.88MPa

Table 4 Experiment Condition of STACY

Fuel	Uranium Nitrate Solution (10wt% 235U enrichment) Uranium Concentration: 225.3 to 313.0 gU/liter Nitric Acid molarity: 2.17 to 2.28 mol/liter Initial Temperature: 23.1 to 25.9 ℃
Reflector	None and Water

Table 5 Experiment Condition of TRACY

Fuel	Uranium Nitrate Solution (10wt% 235U enrichment) Uranium Concentration: 405.5 to 430.0 gU/liter Nitric Acid molarity: 0.76 to 0.85 mol/liter Initial Temperature: 25.1 to 26.3 ℃
Reflector	None

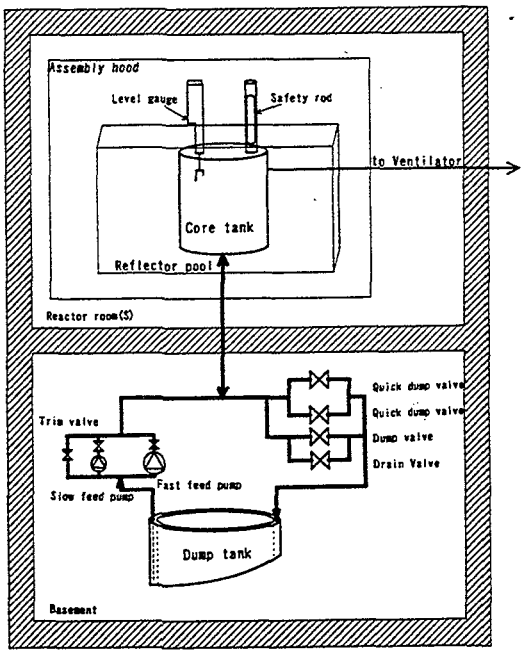

Fig. 1 Schematic Diagram of STACY

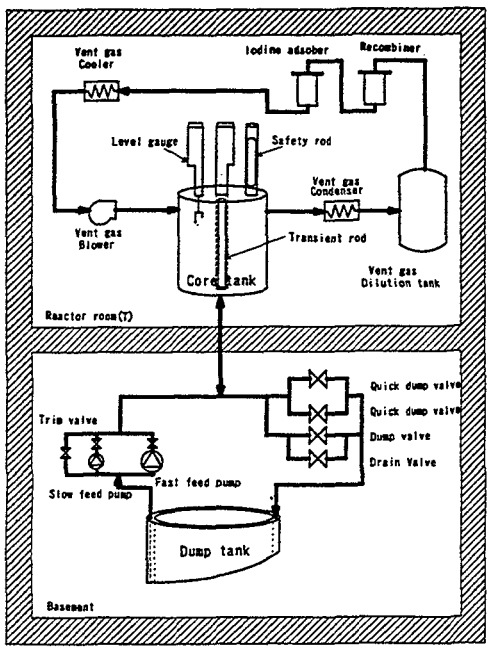

Fig. 2 Schematic Diagram of TRACY

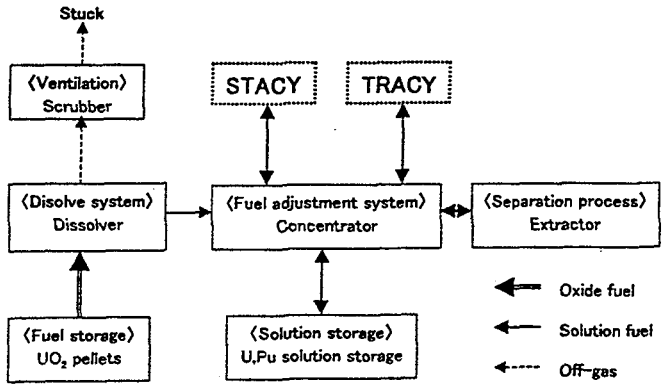

Fig. 3 Schematic of Fuel Treatment System

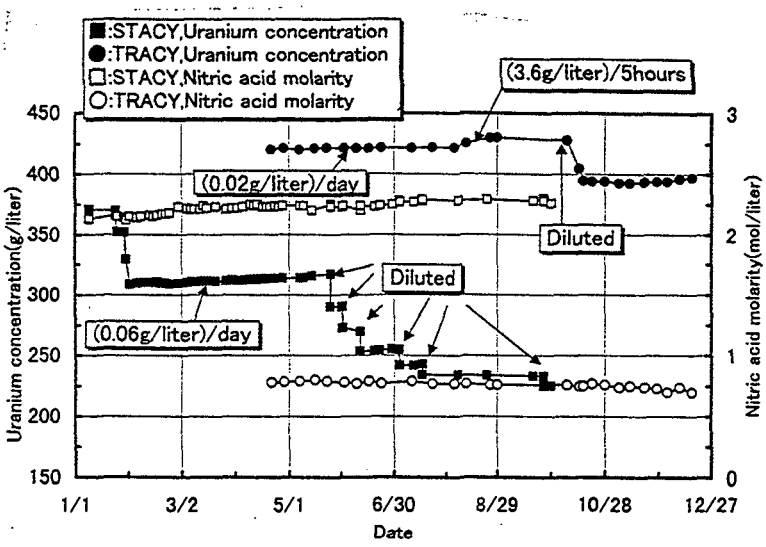

Fig. 4 Variation of Uranium Concentration and Nitric Acid Molarity

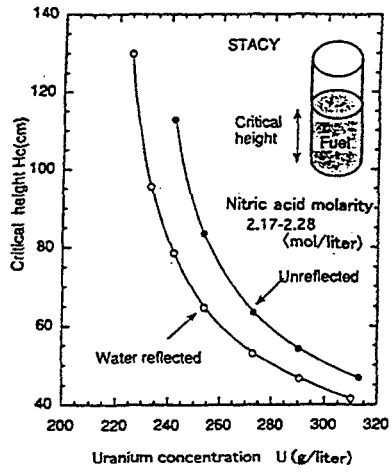

Fig. 5 Variation of Critical Height with STACY

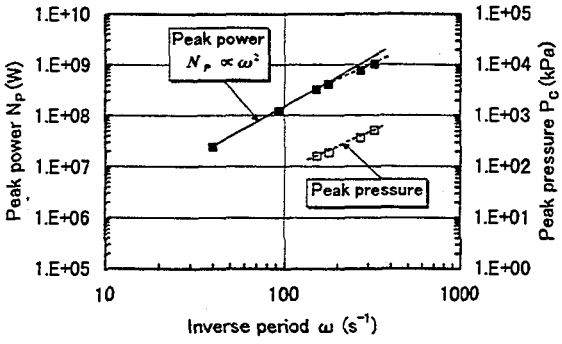

Fig. 6 Peak Power and Peak Pressure in Pulse Withdrawal Operation

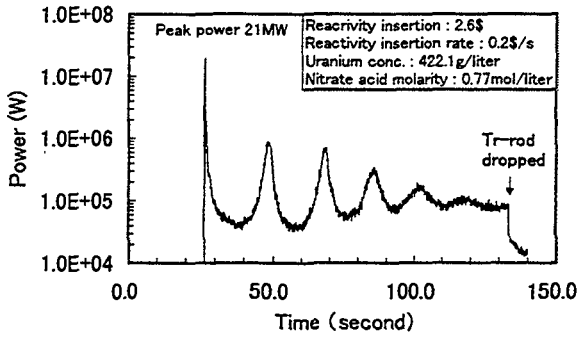

Fig. 7 Power Oscillation in Ramp Feed Operation

CH0100354

CRITICALITY SAFETY OF FRESH HEU FUEL AT THE RA REACTOR

M.P. PEŠIĆ

Nuclear Engineering Laboratory 'NET'

The Institute of Nuclear Sciences 'Vinča', P.O.Box 522, YU-11001 Belgrade, Yugoslavia

ABSTRACT

The first reliable studies on criticality safety of the fresh high-enriched uranium (HEU) fuel, stocked at the RA reactor, are carried recently by using well-known Monte Carlo computer code MCNP™. It is shown that a relatively large amount of fresh HEU fuel, stored at the RA reactor's underground storage 'room', is safe from criticality in normal and assumed incident situations.

1. Introduction

The heavy water reactor RA in the 'Vinča' Institute of nuclear sciences operates since 1959 [1] using low-enriched uranium (LEU - 2%) metal fuel and, from 1976, high-enriched UO_2 (HEU - 80%) fuel. A rather large stock of the HEU fresh fuel, produced in the ex-USSR, is accumulated at the reactor site because the RA is stopped operation in 1982 for various reasons, including the modernization process. The HEU fuel elements are manufactured in a form of 113 mm long hollow cylinder ('slug') with 2 mm thick (ID/OD 31/35 mm) and 100 mm long fuel layer (7.67 g UO_2 dispersed in an aluminum matrix). Aluminum cladding (thick 1 mm) is designed at both side of the annular fuel layer (Fig. 1) of the slug.

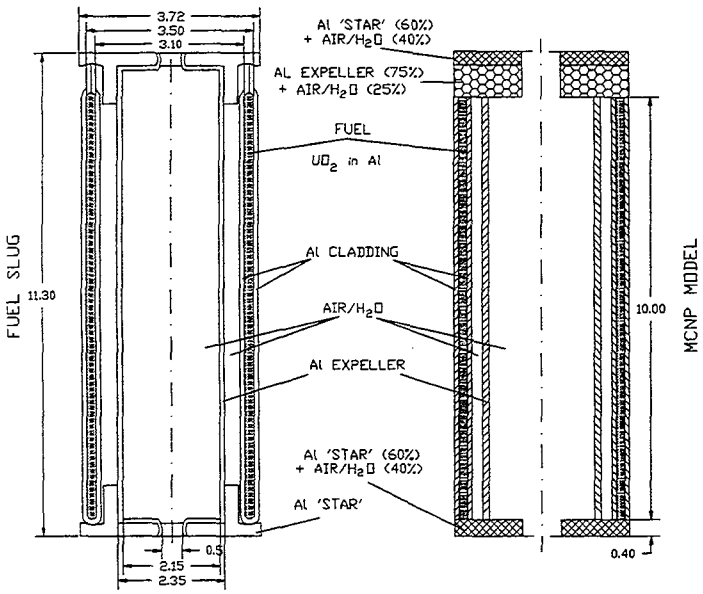

Figure 1 Vertical cross-sections of the RA reactor fuel slug and 3D model used in the MCNP code

Twenty fuel slugs could be placed in three radial rows in an expanded polystyrene 'supporter' (diameter 280 mm, height 138 mm, ρ = 0.075 g/cm^3), as it is shown at Fig. 2. Five supporters with the fuel slugs are packed, one above the other, into a stainless steel transport/storage barrel (ID/OD 280/300 mm, height 766 mm, Fig. 3), supplied by the fuel manufacturer. There are more than 40 barrels with fresh HEU fuel at the RA reactor site, in an underground storage 'room' (Fig. 4) and additional 10 barrels at the RB experimental reactor. The fuel producer did not provide any information on criticality safety of the HEU fuel in the barrels during transport and/or storage in regular (i.e., air) or assumed incidental (e.g., flooding by water) conditions. It is supposed that complex geometry of the fuel slug and the supporter unusual (in nuclear engineering) material were the main obstacles to obtain (by calculation) any reliable data on criticality safety of these barrels. The main reason is that the reactor design codes often cannot solve problems in irregular structures filled by material with high diffusion coefficient.

Until now (i.e., before these studies) there were none credible data on criticality of these fresh HEU fuel slugs stocked at the RA reactor in regular or incidental situations [2].

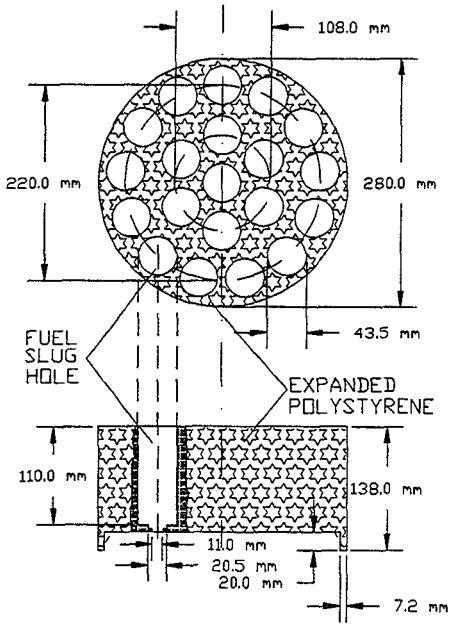

Figure 2 Cross-sections of the fuel slug 'supporter'

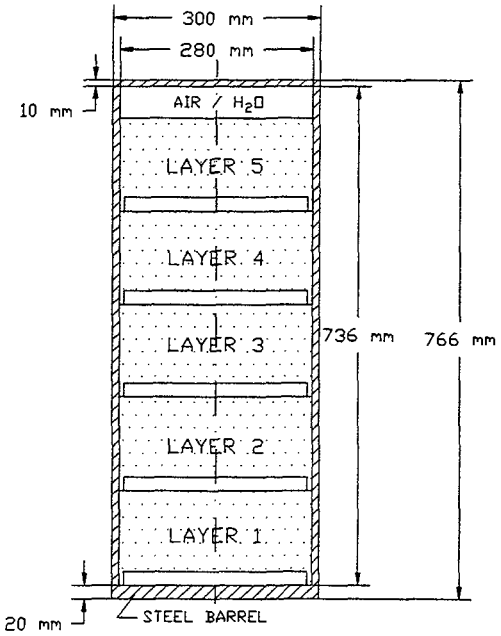

Figure 3 Steel barrel for the RA reactor's fuel slugs

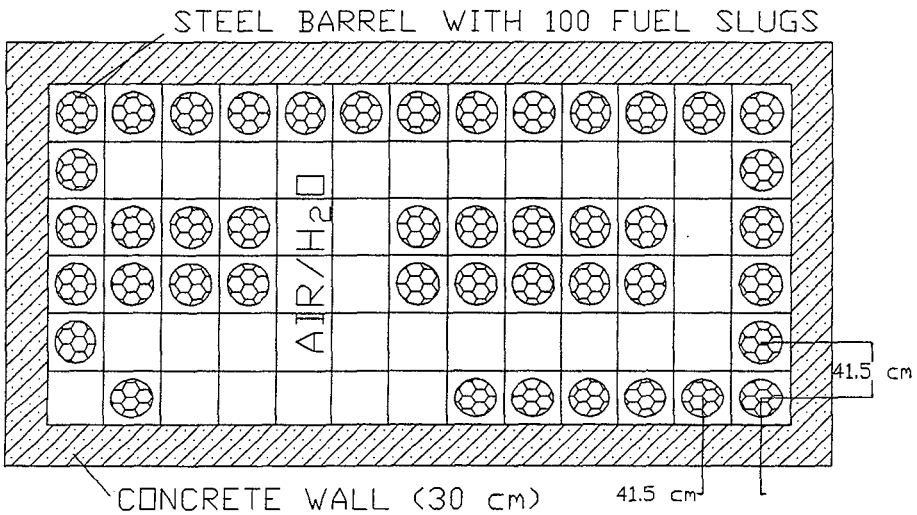

Figure 4 Horizontal cross-section of the 3D model of the RA reactor 'fresh fuel storage room', used in the MCNP code

2. Calculation

The first reliable calculations of the criticality safety of the fresh HEU fuel at the RA reactor are carried recently (1997), by using the well-known Monte Carlo computer code MCNP™ (ver. 4A & 4B) [3]. Positions of the fuel storage barrels, fully loaded (each with 100 HEU fuel slugs), in the storage area ('room') are modelled in three-dimensional (3D) geometry of the code as close to the real one as was possible (Fig. 4). Only small approximations in the 3D geometry modelling are accepted -

e.g., aluminum 'star' of the fuel slug is homogenized with associated air or water part, the barrel's handles and stabilizers, being less than 5% of the barrel total volume, are neglected. The floor and walls of the storage room are made from ordinary concrete (thick 30 cm). During assumed incidental water flooding of the storage room, 30 cm thick water reflector above barrels is accepted as a good approximation for the infinite one. Continuous-energy neutron cross-sections data are used from the ENDF60 (mainly from the ENDF/B-VI file), RMCCS1 (ENDF/B-V), BMCCS1 (ENDF/B-IV), ENDL85 (LLNL-85) and TMCCS1 (thermal scattering laws) libraries distributed [4] with the MCNP code (versions 3B, 4A and 4B). Primary data library for the calculations is based on the ENDF60, while other libraries are used only for nuclides of impurities in the materials that are not included in the ENDF60 library.

Influence of using the free gas model or the $S(\alpha,\beta)$ model of 'similar materials' for neutron scattering in thermal energy region at the polystyrene molecules is analyzed, while for the H_2O, in the case of the assumed incident situations, appropriate the lwtr.01t data are used. Since the MCNP code can easily overcomes the complex geometry, the preliminary part of the research was carried out to answer to the question: Is the free gas model suitable for the polystyrene because the appropriate scattering $S(\alpha,\beta)$ model in thermal energy region is not available? In that study the scattering model for 'similar material', as it was suggested in the [5], was chosen for the calculations. As the 'similar materials' in the MCNP code's TMCCS1 library with given $S(\alpha,\beta)$ scattering laws, were selected: ordinary water (H_2O), benzene (C_6H_6) and polyethylene ($-[CH_2]_n-$), because connection of the H atoms to the C atoms in their molecule structures is 'similar' to the organic structure of the polystyrene ($-[-CH(C_6H_5)-CH_2-]_n-$). The analysis, shown in details in Refs. [6-7], has shown that differences in the effective multiplication factors (k_{eff}), due to application of the free gas model or the $S(\alpha,\beta)$ model for 'similar material', were less than 7% always, including imaginary cases when whole polystyrene is replaced in the calculations with water or polyethylene. Because the k_{eff} is far away from 1, these differences can be neglected and the free gas model or the $S(\alpha,\beta)$ models for C_6H_6 and $-[CH_2]_n-$ are used.

3. Results

In the MCNP calculations, the initial neutron source is placed in the fuel layer of each fuel slug. One thousand neutron histories per cycle are selected and the first 15 cycles are run to determine the steady state neutron source distribution, while subsequent 450 active neutron cycles are run to obtain the effective neutron multiplication factor (k_{eff}) with relative statistical error (1σ) less than 1%. Results of the MCNP calculations for the k_{eff} and prompt neutron fission lifetime ($\ell_{fission}$) are given in the Table I for case when the new ENDF60 and the old BMCCS1 libraries are used. The thermal neutron scattering law used for the expanded polystyrene, was, always, for the C_6H_6.

Table I Results of the MCNP calculations

Case (description)	Library	$k_{eff} \pm 1\sigma$	$\ell_{fission} \pm 1\sigma$ [μs]
Regular condition: air in the 'room' and barrels	ENDF60	0.06091 ± 0.00040	20.2 ± 1.9
	BMCCS1	0.06362 ± 0.00044	20.6 ± 1.9
Incident: H_2O flooded 'room', not barrels	ENDF60	0.14148 ± 0.00048	16.6 ± 0.7
	BMCCS1	0.14407 ± 0.00054	16.5 ± 0.7
Incident: H_2O flooded 'room' and barrels	ENDF60	0.34942 ± 0.00080	11.3 ± 0.3
	BMCCS1	0.35323 ± 0.00082	11.3 ± 0.3
Incident: H_2O flooded barrels, not the 'room'	ENDF60	0.40310 ± 0.00088	11.7 ± 0.4
	BMCCS1	0.40623 ± 0.00092	11.7 ± 0.4

4. Conclusion

It is confirmed, for the first time, that the relatively large inventory of the fresh high-enriched uranium fuel, stocked at the RA storage room, is safe from criticality in the regular (in air) and assumed incident (flooded by water) situations. Influence of usage of different scattering laws or material cross sections from different evaluated nuclear data files is also analyzed and estimated to be maximum of the total 10% of the calculated value for the k_{eff}. Including estimated uncertainties of all other assumptions and approximations (e.g., errors or unknown nuclide concentrations of low detectable impurities in material compositions) the total uncertainties of the calculated k_{eff} can be estimated at the total value of 15% of the k_{eff} with 95% probability. This relatively high uncertainty still offers high margin for nuclear criticality since the k_{eff} values of the fission systems studied are far away from 1.

Acknowledgements

This paper is a part of research carried out in:
a. Project no. 08M06 supported by the Ministry of Science and Technology of Republic of Serbia, and
b. Common Research Project no. 7 of Il Laboratorio Ingegneria Nucleare, DIENCA, Universita degli studi di Bologna and the Nuclear Engineering Laboratory, The Institute of Nuclear Sciences 'Vinča', supported by the Italian Ministry of Foreign Affairs and Yugoslav Ministry of Development, Science and Environment according to the Cultural/Scientific Agreement between Republic of Italy and FR Yugoslavia (Roma, May 14-16, 1997).
Author also acknowledge to Mr Zoran Vukadin of the RA reactor department for the data contributed for the RA reactor fresh fuel storage.

5. References

[1] "Research Reactor RA", IAEA Directory of Research Reactors, Vol. **VI**, pp. 222-227, IAEA, Vienna (1963)

[2] O.Šotić et al., "Research Reactor RA - The Final Safety Analysis Report", (in Serbian) Vol. **0-17.**, Vinča (1986)

[3] J.F.Briesmeister (ed.), "MCNP™, A General Monte Carlo N-Particle Transport Code, Version 4A - Manual", Report LA-12625-M, LANL, Los Alamos, NM (November 1993)
J.F.Briesmeister (ed.), "MCNP™, A General Monte Carlo N-Particle Transport Code, Version 4B - Manual", Report LA-12625-M, LANL, Los Alamos, NM (March 1997)

[4] C.D.Harmon II, R.D.Busch, J.F.Briesmeister, R.A.Forster, "Criticality Calculation with MCNP™: A Primer", Report LA-12827-M, LANL, Los Alamos, NM (August 1994)

[5] "MCNPXS: Standard Neutron, Photon and Electron Data Libraries for MCNP4B", RSICC Data Library DCL-189, RSICC, ORNL, Oak Ridge, TN (April 1997)

[6] M.Pešić, "Criticality Safety of Storage Barrels for Enriched Uranium Fresh Fuel at the RB Research Reactor", Proceedings of the 1st Yugoslav Nuclear Society Conference - YUNSC'96, (ed. D.Antić) pp.307-310, Belgrade FR Yugoslavia (October 7-9, 1996)

[7] N.Dašić, M.Pešić, "Criticality Calculation of Wooden Storage for Fresh Enriched Uranium Fuel at the RB Research Reactor", (in Serbian) Proceedings of XLI Yugoslav ETRAN Conference/Nuclear Division, Vol. **IV**, pp. 275-277, Zlatibor (June 3-6, 1997)

CH0100355

THE NEUTRON EMISSION METHOD FOR DETERMINATION OF FISSILE MATERIALS WITHIN THE SPENT FUEL -EQUIPMENT OPTIMIZATION.

ATTYA A. ABOU-ZAID
Reactors Department, Nuclear Research Center
Atomic Energy Authority, 13759- Cairo, Egypt
(currently,Ph.D student at Atomic Energy Institute, POLAND)

and

K. PYTEL
Atomic Energy Institute, Research Reactor Center
05-400 Otwock- Swierk, POLAND

ABSTRACT

A nondestructive assay method using neutron technique for determination the fissile isotopes content along the irradiated fuel rods of MARIA reactor is presented. This method is based on detection of the fission neutrons emitted from external neutron source and multiplied by the fissile isotopes U-235, Pu-239, and Pu-241 within the fuel rod. Neutrons emitted from the spent fuel originate mainly from induced fission in the fissile material and source neutrons penetrating the fuel rod without interaction. Additionally, the neutrons from (α, n) reaction and spontaneous fission of actinide isotopes contribute in the total population of emitted ones.

The method gives a chance to perform an experimental calibration of the equipment using two points: fresh fuel rod (maximum signal plus background) and its mock-up (background).

The Monte Carlo code has been used for the geometrical simulation and optimization of the measuring equipment: neutron source, moderating container, collimator, and the neutron detector. The results of calculation show that the moderating container of 30 cm length and 32 cm diameter and a collimator of 26 cm length, 6.8 cm width, and 2 cm height are the optimal configuration. With respect to the fission chamber position, the number of neutrons has been calculated as a function of distance from the fuel rod surface in the case of fresh fuel and its mock-up. The distance at which the ratio of the signal to background has maximum has been found at 4.5 cm far from the outer surface of the fuel.

1. Introduction

Neutron measurement method is preferred because the spent fuel contains a large amount of fissile isotopes that guarantees effective multiplication in the fuel and the emitted neutrons can be easily detected. This method requires the external neutron source which induce fission in the fissile isotopes U-235, Pu-239, and Pu-241 within the fuel rod. These fission neutrons are detected by neutron detector positioned at the opposite side to the neutron source. The second main contributor to the detector signal comes from source neutrons penetrating the fuel rod without interaction (elastically scattered neutrons belong to this group). Another neutron source, so called inherent ones having relatively low importance: Thus, the total number of neutrons counted by fission chamber, CR_t , is equal to [1,2,3]:

$$CR_t = CR_f + CR_d + CR_i \qquad (1)$$

where:

CR_f = neutrons due to fission in the fissile isotopes.
CR_d = neutrons coming directly from neutron source.
CR_i = neutrons due to the inherent neutron emission.

The most dominant sources of inherent neutron emission are the spontaneous fission and the (α, n) reaction in case of oxide fuels. As an example, the neutron emission rates from spontaneous fission per

one MARIA fuel element are shown in table (1). The results have been obtained by ORIGEN [4] Code for MARIA spent fuel element with maximum burn-up of 110 MWd/element [5].
Among the components of the signal (equation (1)) the only CR_d is not specific for fissile materials. This value should be subtracted from the total signal,CR_t, to obtain the net signal proportional to the amount of fissile isotopes within investigated fuel.
The subtraction can be done either numerically (see section 4) or experimentally using mock-up of a given fuel (section 5).

TABLE (1) NEUTRONS FROM SPONTANEOUS FISSION.

Isotope	Half-life (Yr)	spontaneous fission
Pu-238	8.78E01	7.96E01
Pu-240	6.55E03	5.40E01
Pu-242	3.76E05	2.41E00
Cm-242	4.46E-01	9.37E01
Cm-244	1.81E01	4.94E01

2. Burn-up measurements of MARIA fuel element

The fuel element of MARIA reactor (case study) contains six tubes with uranium enriched to 80 % of U-235 [5]. The burn-up of MARIA reactor fuel is measured by means of energy balance. This is possible for individual fuel elements because of the special design of MARIA reactor; each fuel element has its own cooling channel with individual measurement of water flow and temperatures. thus, the burn-up B of a given fuel element is calculated from the formula

$$B = \int \dot{m}\, C_p\, \Delta T\, dt$$

where:

$\dot{m}$: cooling mass flow rate;

C_p : coolant specific heat;

ΔT : outlet-inlet temperature difference

and integration is over the operation time.

Typically, burn-up of MARIA fuel is expressed in MWd/element. This method allows the evaluation of burn-up of the whole fuel element without information about the longitudinal burn-up distribution. The MARIA fuel has been chosen as a test case because it offers possibility of verification neutron emission method measurements by means of independent method.

3. Description of the method

The principle of the method is shown in fig. (1). The measuring installation is submerged under water to provide shielding against intensive gamma radiation emitted from the spent fuel. This method depends on the measurement of neutrons from fission in the fissile isotopes present in the spent fuel.

A neutron source of Pu-Be type[6] has been used and it has a relatively high energy spectrum. Since these energetic neutrons have low fission cross section with the fissile isotopes, their thermalization is necessary. The source neutron is positioned in a center of cylinder filled with water playing a role of neutron moderating material. This cylinder is surrounded by a cadmium having thickness of 1 mm . To make possible measurement of the fissile material content along the spent fuel element, a collimator

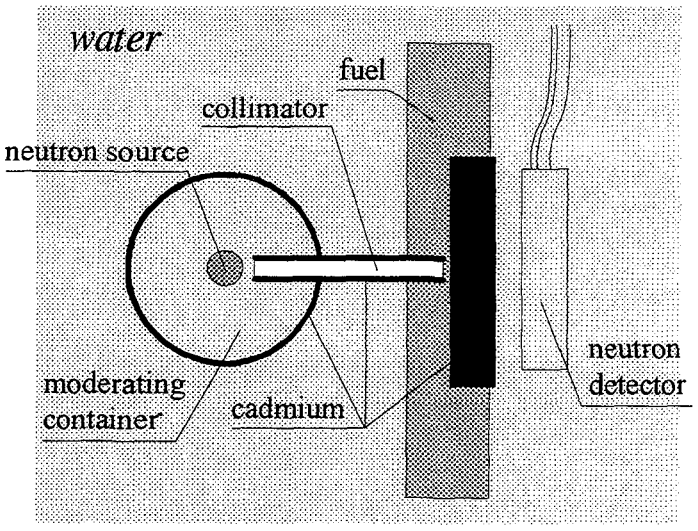

Fig 1. Schematic diagram of the measuring equipment

of rectangular shape has been applied. The function of this collimator is to establish a narrow and wide beam of neutrons. The collimator is inserted to the moderating container. Also the collimator is shielded with 1 mm cadmium and is filled with air. Collimated neutrons are interacting (fission, absorption, scattering) with the fuel and then detected by the neutron detector. To eliminate the signal background from gamma radiation, the U-235 fission chamber has been chosen. The fission chamber is not adjacent to the fuel surface. Certain distance from the fuel surface guarantees proper thermalization of fission neutrons in the water.

The installation also gives a chance to insert a neutron absorbing material besides the fuel element opposite to neutron source. In this case, the amount of non-fission neutrons (e.g. scattered or transmitted from the neutron source) is minimized and the total fissile isotopes content are proportional to the number of fast neutrons resulting from fission.

The arrangement and geometry of each component of the equipment i.e. neutron source, moderating container, collimator, and fission chamber play an important role in the measurement. The optimization of the equipment is required and it will be discussed in the next section.

4. Optimization of the components arrangement

The components of the equipment are simulated and optimized numerically. The Monte Carlo MCNP4A Code [7] has been used for this purposes. Although Monte Carlo method is time consuming, it is well suited for complicated and complex problems that can not be modeled by computer codes which use deterministic methods.

The objective function of the optimization is the maximum integral of thermal neutron current multiplied by energy dependent fission cross section for U-235 escaping from the neutron source, moderating container, and collimator towards the fuel element as well as the maximum neutron flux emitted from the fuel element and counted by fission chamber as in the following equations:*

$$\int_E \int_A \int_u j(r,E,\mu)\, \sigma_f(E) dE\, dA\, d\mu \qquad (2)$$

$$\int_E \int_A \phi(r,E)\, \sigma_f(E) dE\, dA/A \qquad (3)$$

where, $j(r,E,\mu)\, dE\, dA\, d\mu$: expected number of neutrons passing through an area dA with energy E in dE, direction μ in $d\mu$

$\sigma_f(E)$: the energy dependent microscopic fission cross section for U-235

μ : the cosine of the angle between surface normal and neutron trajectory.

$\phi(r,E)\, dA\, dE$: expected number of neutrons in dA with energy E about dE.

The geometry of the equipment is too complicated to perform the optimization within one computation step. The whole optimization problem has been spilitted into three separate steps: moderating container, collimator and, fuel-detector geometry.

4.1 Moderating Container

To get the optimum diameter of the moderating container having the geometry of a cylinder, the current-cross section integral (Eq.(2)) is calculated as a function of the distance from the neutron source surface. These calculations are repeated for neutron moderating container having the diameters from 8 cm up to 34 cm. The results are shown in fig. (2) and it is observed that with increasing the diameter of the moderating container, the current-cross section integral increases. The increasing in the current-cross section integral continue up to certain diameter (30 cm) and further

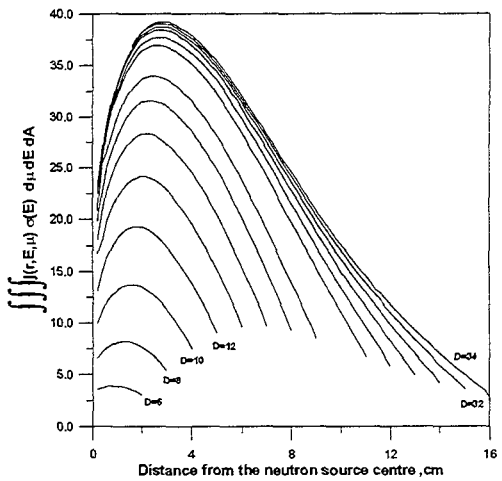

Fig 2. The number of neutrons as a function of the distance from the neutron source surface.

* we will refer to this quantities as: current-cross section integral and flux-cross section integral

extension of the diameter is not very effective. In this study a diameter of 32 cm is chosen which gives a maximum of current-cross section integral at about 3 cm far from neutron source surface.

4.2 The Collimator

It is assumed that the geometry of the collimator is rectangular of 6.8 cm width (the effective diameter of the fuel rod). With respect to the collimator height, a three cases were studied , one slide of 2 cm height, two slides separating with neutron absorbing material each one of 1 cm height, and four slides each of them of 0.5 cm height (also these slides are separated from each other by neutron absorbing material). For every case the length was assumed from 12 cm up to 26 cm and the collimator face at the maximum point in the moderating container i.e. 3 cm far from the neutron source surface.

The Monte Carlo calculations have been performed and the results are shown in fig.(3). The figure shows that with increasing collimator height, the current-cross section integral increases. Also it is seen that with increasing collimator length, the current-cross section integral decreases. Starting from certain length (24 cm) the current-cross section integral tends to be approximately constant. In this study a collimator of 26 cm length and 2 cm height is chosen.

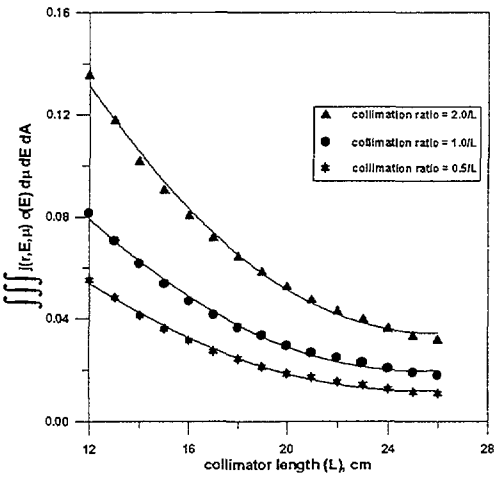

Fig. 3. The integration as a function of collimator length and collimation ratio

4.3 Fission Chamber

With respect to the fission chamber position, the flux-cross section integral (Eg. (3)) is calculated as a function of distance from the surface of the fuel element. The calculations have been performed for the fresh fuel and mock-up of the fuel as shown in fig.(4). The difference in value between the two curves in fig.(4) is due to the fission neutrons and the inherent neutron emission.The fission chamber is positioned at the distance in which the ratio of number of neutrons emitted from fresh fuel over the same number from the mock-up of the fuel (signal to back-ground ratio) has maximum and it is found on bout 4.5 cm. from the fuel rod surface (see fig.(5)).

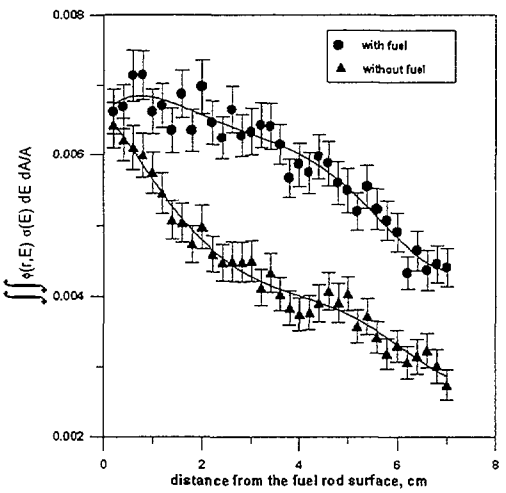

Fig.4 The flux-cross section integral as a functiom of the distance from the fuel rod surface.

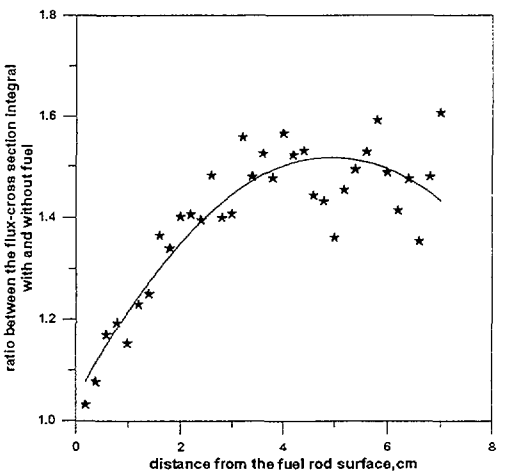

Fig.5. The ratio of the flux-cross section integral for fresh fuel over the same value of its mock-up versus the distance from the surface of the fuel.

5. Method of fissile isotopes measurement in the spent fuel.

To measure the amount of fissile isotopes within the spent fuel, two calibration points at least are required. These two points are the count rate from the fresh fuel and from the mock-up of the fuel which

corresponds to the nominal content and zero content of fissile isotopes respectively. The relation between the neutron count rate and the number of fissile material is assumed to be linear as shown in fig.(6).

The number of fissile isotopes of any spent fuel i, $(N_s)_i$ can then be calculated using the following relation

$$\frac{(N_s)_i}{N_f} = \frac{(CR_s - \Delta CR_s)_i - r.CR_m}{(CR_f - \Delta CR_f) - r.CR_m}$$

where:

CR_f = count rate of fission chamber from fresh fuel rod due to the presence of neutron source

ΔCR_f = count rate of fission chamber from fresh fuel rod without neutron source

CR_s = count rate of fission chamber from spent fuel rod due to the presence of neutron source.

ΔCR_s = count rate of fission chamber from spent fuel rod without neutron source

CR_m = count rate of fission chamber from fuel rod mock-up due to the presence of neutron source

r = correction factor due to the difference in neutron transmission between the fuel material and the mock-up material (Aluminum)

N_f = fissile isotope content in the fresh fuel element (nominal value)

In MARIA reactor the quantity of U-238 in the fuel is low and the term ΔCR_f can be neglected and the above equation becomes

$$\frac{(N_s)_i}{N_f} \cong \frac{(CR_s - \Delta CR_s)_i - r.CR_m}{CR_f - r.CR_m}$$

Thus, the number of fissile isotopes, $(N_s)_i$, of the spent fuel element i is equal to :

$$(N_s)_i \cong \frac{(CR_s - \Delta CR_s)_i - r.CR_m}{CR_f - r.CR_m} N_f$$

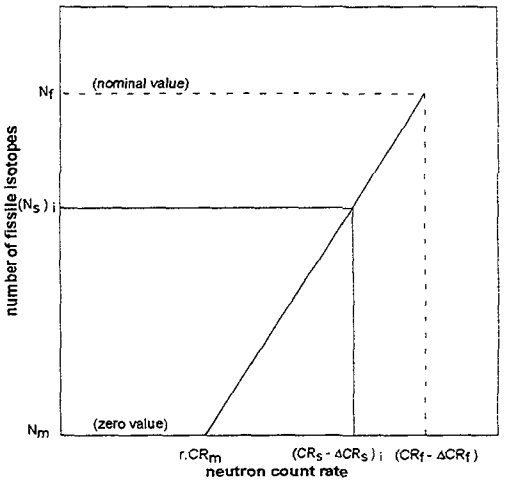

Fig 6. The relation between neutron count rate and the number of fissile isotopes

6. Conclusions

Numerical simulation of a neutron emission method applied to the measurement of fissile isotopes content in irradiated fuel proved feasibility of the method. The experimental equipment consisting of: neutron source, moderating container, collimator, fuel rod, and fission chamber has been optimized by Monte Carlo MCNP-4A code. The output signal is dominated by two components: counts due to fission neutrons and neutrons directly transmitted from the source(reported as background). The only first component is proportional to the fissile material content and the experimental method for subtraction of this information from the output signal has been proposed and discussed.

Acknowledgment

The authors would like to express their thanks to Dr. K. Andrzejewski for his assistance and fruitful discussion in Monte Carlo calculations.

References

[1] J. R. Philips et al., LA-9002-Ms, Los Alamos National Laboratory, 1981.

[2] H. Würz et al., Nuc. Tech., Vol. 90, May 1990,p.191.

[3] H. Würz, Nuc. Tech., Vol. 95, August 1991,p.193.

[4] M. J. Bell ,ORIGEN - The ORNL Isotope Generation and Depletion Code, ORNL-4628 (May 1973)

[5] W. Byszewski, et al., Nucleonika, Vol.31- No 11-12/76,p.1257.

[6] L. Stewart, Physical Review, Vol.98, No.3, May 1,1955,p.740.

[7] J. F. Briesmeister, Ed., ,MCNP-4A General Monte Carlo N-Particle Transport Code, Version 4A, LA-12625, 1993.

CORE DESIGN OPTIMIZATION BY INTEGRATION OF A FAST 3-D NODAL CODE IN A HEURISTIC SEARCH PROCEDURE

CH0100356

R. van Geemert[1], P.F.A. de Leege[1]
J.E. Hoogenboom[1], A.J. Quist[2]

[1]Delft University of Technology, Interfaculty Reactor Institute
Mekelweg 15, 2629 JB Delft, The Netherlands
E-mail : vgeemert@iri.tudelft.nl
leege@iri.tudelft.nl
hoogenboom@iri.tudelft.nl
[2]Delft University of Technology, Faculty of Information Technology and Systems
Mekelweg 4, 2628 CD Delft, The Netherlands
E-mail : a.j.quist@twi.tudelft.nl

ABSTRACT

An automated design tool is being developed for the Hoger Onderwijs Reactor (HOR) in Delft, the Netherlands, which is a 2MWth swimming-pool type research reactor. As a black box evaluator, the 3-D nodal code SILWER, which up to now has been used only for evaluation of pre-determined core designs, is integrated in the core optimization procedure. SILWER is a part of PSI's ELCOS package and features optional additional thermal-hydraulic, control rods and xenon poisoning calculations. This allows for fast and accurate evaluation of different core designs during the optimization search. Special attention is paid to handling the in- and outputfiles for SILWER such that no adjustment of the code itself is required for its integration in the optimization programme. The optimization objective, the safety and operation constraints, as well as the optimization procedure, are discussed.

INTRODUCTION

The Hoger Onderwijs Reactor (HOR) is a 2MWth pool-type research reactor situated at the Interfaculty Reactor Institute in Delft, the Netherlands. Its main purpose is to serve as a scientific facility for reactorphysical experiments and to supply neutron beams for use in neutron scattering experiments and neutron activation analysis. It contains highly enriched MTR-type fuel elements, and features a core dimension of approximately 47 cm x 57 cm x 60 cm. The core grid plate has 42 positions, normally loaded with fuel elements including control elements and several reflector elements, containing Be-metal, as is indicated in Fig.1. The reactor is operated continuously 5 days a week. The maximum licensed excess-reactivity is 6%, which requires replacement of a few elements and reshuffling at a three-month interval. The reshuffling operation usually consists of discharging the fuel element with the highest assembly-averaged burnup, followed by a permutation of a limited number of fuel elements such that the vacancy in the core created by discharging the highly-burnt fuel element travels to a position somewhat nearer to the central region in the core, where it is filled with a fresh fuel element.

THE OPTIMIZATION PROBLEM

In this study, we are interested in optimizing the trajectory along which the fuel element vacancy travels to a position near or in the central region, and find the loading scheme associated with the highest allowable value of the effective multiplication factor of the uncontrolled core $k_{eff}^{(uc)}$(BOC) (that is, the core with all control rods fully withdrawn) at Begin-Of-Cycle. Successive maximization of $k_{eff}^{(uc)}$(BOC) may lead to longer cycle lengths, or to a smaller multi-cycle averaged number of fresh fuel assemblies to be fed into the core. The *safety constraints* are the maximum core

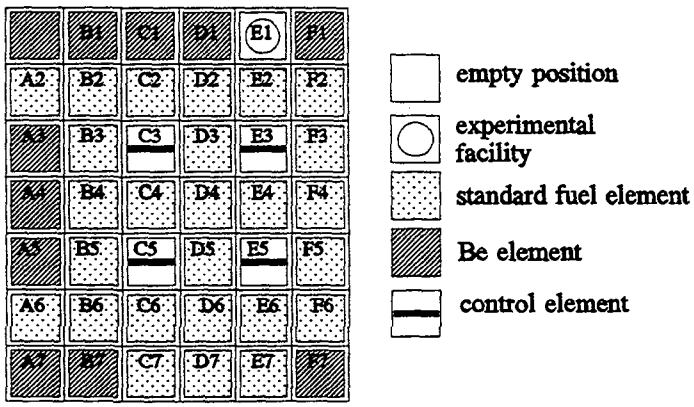

Fig.1 Schematic view of the HOR core

reactivity constraint, the shutdown margin constraint and the power peaking constraint. The maximum core reactivity constraint dictates that the effective multiplication factor of the uncontrolled core (that is, the core with all control rods fully withdrawn) $k_{eff}^{(uc)}$(BOC) at Begin-Of-Cycle should remain below 1.06. The shutdown margin constraint requires that it should at all times be possible to shut the reactor down by inserting the two control rods with the least reactivity worth, with the other two rods fully withdrawn. This last mentioned constraint usually requires that a fresh fuel element be placed in the vicinity of a control rod. The power peaking constraint can be derived from thermal-hydraulic analysis. The *operation constraints* are first of all related to a target cycle length of about three months, which requires a minimum core reactivity at BOC. There is also a constraint on $k_{eff}^{(uc)}$(EOC), which should be larger than 1.03 for compensating the equilibrium xenon poisoning effect, the temperature effect, and the short-lived fission product buildup effect.

SILWER : A FAST 3-D NODAL DIFFUSION CODE

The heart of the automated design procedure consists of the fast 3-D nodal code SILWER, which is a part of the LWR core analysis code system ELCOS [1] of PSI (Paul Scherrer Institute, Villigen, Switzerland). As is generally known, nodal codes are powerful tools for full core (three-dimensional) reactor calculations such as criticality, burnup, etc. In ELCOS the modules CORCOD and SILWER are used for nodal calculations. CORCOD computes interpolation coefficients based on few-group homogenised macroscopic cross sections prepared by the cell code SCALE. A set of subroutines called SSLINK (SCALE_SILWER_LINK) [2] has been developed to extend the capabilities of the SCALE code system with the nodal method used in SILWER. These macroscopic cross sections are generated for several independent state variables, which can be : power density, burnup, water density, water temperature, fuel temperature, etc. The data stored for each group comprise homogenized macroscopic cross sections (total scattering, absorption, production and fission) as well as the fission spectrum, flux, neutron mean velocities and the microscopic absorption cross section of ^{135}Xe. The fit coefficients, the degrees of approximation and the interpolation coefficients are stored as well. The output file of CORCOD is produced once, and can be read by the SILWER code. SILWER simulates the reactor core in steady state operation by three-dimensional neutronic and thermal hydraulic calculations. Two different nodal diffusion modules are available : one with polynomial expansion (multi-group, more than two) and the other with analytical solutions (two-group) of the diffusion equation in each node. The multi-group method is important for small reactor cores with high leakage where a two-group treatment is not sufficient. The HOR research reactor in Delft is a typical example of such a small high leakage core for which the module based on polynomial expansion should be used. In the multi-group picture, a five-group approach was adopted.

THE AUTOMATED DESIGN PROCEDURE

The optimization control structure is shown in Fig. 2. The heuristic optimization shell consists of a number of separate modules which can be used to set up a multiple cyclic interchange [3] search procedure. Core configurations to be evaluated are stored compactly and can be read by the module SINFIG (Silwer Input File Generator) which then produces an inputfile to be read by SILWER. The files containing the core configurations also contain data indicating what type of core calculation is to be performed by SILWER.

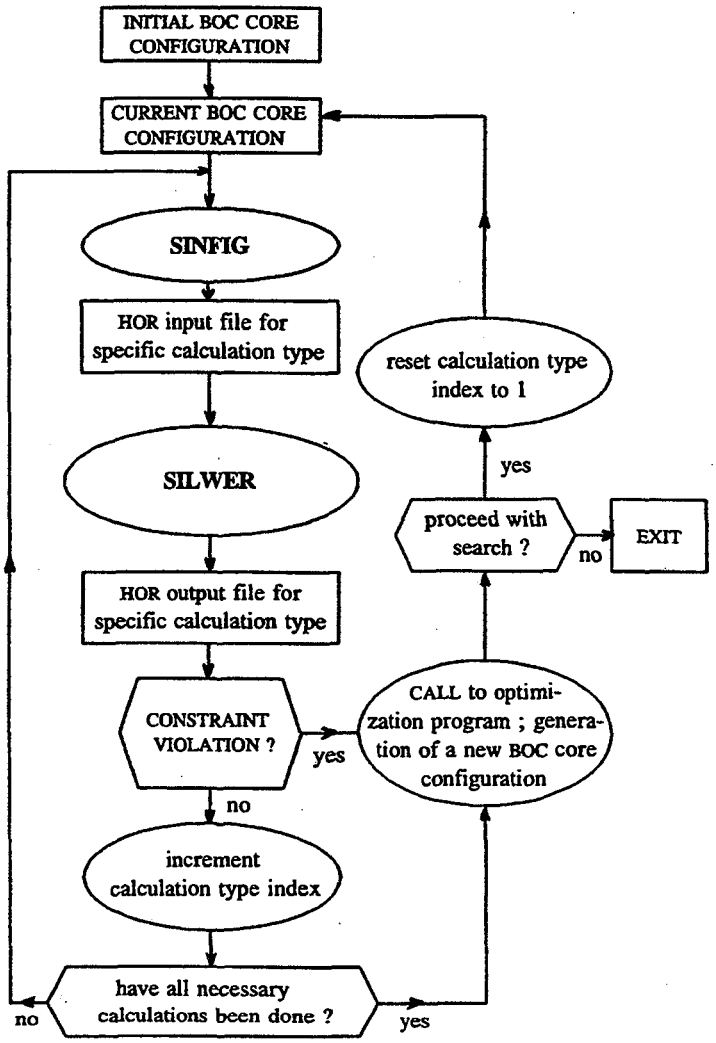

Fig. 2 The optimization control structure.

Basically, 5 different types of calculations can be distinguished which are relevant for the optimization process :

1 The BOC 'clean core' calculation in which the effective multiplication factor of the uncontrolled core (that is, the core with all control rods withdrawn) is calculated, in order to check whether the BOC reactivity constraint is satisfied.

2 Six different rod drop calculations in which all six different combinations of two out of four control rods are fully inserted in the core with the other two rods fully withdrawn, in order to check if for each of the six cases the shutdown margin constraint is satisfied.

3 The criticality search calculation in which the uniform critical depth of the control rods is determined, yielding the nodal power distribution and the power peaking factor, in order to check if the power peaking constraint is satisfied.

4 The burnup calculation which is performed in a number of time steps and is aimed at calculating the EOC configuration of the core.

5 The EOC 'clean core' calculation in which the effective multiplication factor of the uncontrolled core (that is, the core with all control rods withdrawn) is calculated, in order to check whether the EOC reactivity constraint is satisfied.

Naturally, if during the course of performing these calculations it turns out that for a specific core configuration one of the constraints is violated, the evaluation of this specific pattern is immediately terminated. This is realized by the program COVIMO (Constraint Violation Monitor). The objective considered by us is to optimize $k_{eff}^{(uc)}$(BOC), the effective multiplication factor of the uncontrolled core (that is, the core with all control rods withdrawn) at BOC, subject to the different safety and operational constraints. If $k_{eff}^{(uc)}$(BOC) is maximal, the operation cycle length is maximal as well, which guarantees maximal discharge burnup of the fuel elements to be removed from the core.

RESULTS

From the results obtained by us it turns out that, if one wishes to realize the target cycle length of about three months, it seems indeed absolutely necessary to implement a center-to-outside loading. The constraints imposed by the physics of the problem appear in fact to leave very little space for combinatorial freedom in adjusting the core configuration. This is why a number of engineering constraints have been programmed which force the core configuration to be evaluated not to differ too much from a reference core configuration which was found to satisfy all operational and safety constraints. Within the constrained candidate space defined by these engineering constraints, a more local search could be performed in order to investigate whether better core configurations can be found. In Fig. 4, it is indicated that, when no engineering constraints are used, the probability of encountering worse patterns due to random permutations is much higher than the probability of finding improved patterns. In the right, dense part of the cloud in Fig. 4, the results encountered in a pairwise interchange optimization (PIO) search [4] performed in this constrained candidate space are shown. The PIO procedure indeed manages to find a slightly better core configuration in terms of the objective function than the reference core configuration that was used in actual practise. In Figs. 3a and 3b, both the reference core configuration and the improved core configuration are shown. The different burnup levels of the fuel elements are indicated by the different shades of grey in the illustration. The configurations in Figs. 3a and 3b differ in the positions of the fuel elements neighbouring the center-positioned 'white' (fresh) fuel element.

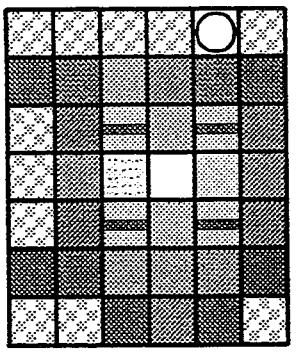

Fig. 3a The reference core configuration

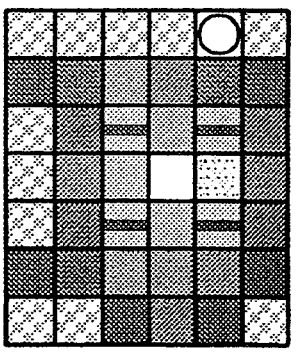

Fig. 3b The improved core configuration

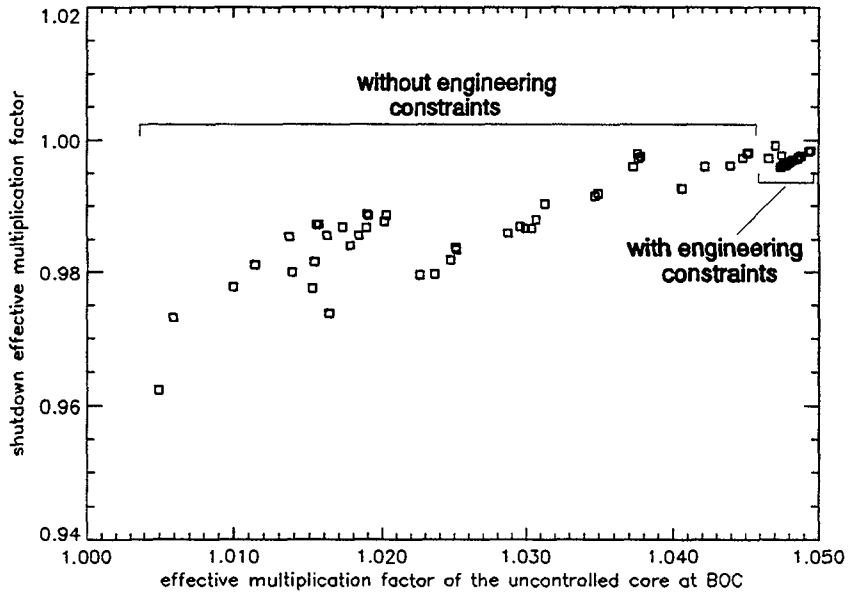

Fig. 4 Plot of evaluated core configurations in the performance plane spanned by the effective multiplication factor of the clean core and the shutdown effective multiplication factor.

CONCLUSIONS

The operational and safety demands on the fuel cycle for the HOR more or less seem to dictate that a Center-to-Outside loading should be implemented, with only very limited combinatorial freedom allowed in choosing the core configuration. In spite of this, it has turned out to be possible to find a slightly better core configuration by using a heuristic search procedure than by application of a trial-and-error method. To this end, an automated design tool has been constructed in which the validated PSI nodal code SILWER is embedded as a black box simulator in a simple heuristic optimization shell. At IRI, the option is studied to condition the modular programs such that it will become possible to apply the optimization procedure in the design of future transitional cores containing both HEU and LEU fuel elements, for which the optimization studies may be expected to yield more improvement.

REFERENCES

1) J.M. Paratte et al., ELCOS the PSI Code System for LWR Core Analysis, PSI Bericht Nr. 96-02, Villigen CH, January 1996.

2) P.F.A. de Leege, SSLINK : Linking a Nodal Code to the SCALE Code System, proceedings of the ANS Joint International Conference on Mathematical Methods and Supercomputing for Nuclear Applications, Vol.1, 220-223 (1997).

3) R. van Geemert, A.J. Quist, J.E. Hoogenboom, H.P.M. Gibcus, Fuel Shuffling Optimization for the Delft Research Reactor, proceedings of the International Topical Meeting on Research Reactor Fuel Management, Bruges, Belgium (1997).

4) R. van Geemert, A.J. Quist, J.E. Hoogenboom, Reload Pattern Optimization by Application of Multiple Cyclic Interchange Algorithms, proceedings of the International Conference on the Physics of Reactors, (PHYSOR'96), Mito, Japan (1996).

SHIPMENT OF TRIGA SPENT FUEL TO DOE'S INEEL SITE
A STATUS REPORT

CH0100357

MR. JOHN PATTERSON
DIRECTOR
DOE FIELD OFFICE OPERATIONS
NAC INTERNATIONAL
227 GATEWAY DRIVE
AIKEN, SC 29803
USA

and

MR. JAMES VIEBROCK
SENIOR VICE PRESIDENT

MR. TOM SHELTON
VICE PRESIDENT

MR. DIXON PARKER
PROJECT ENGINEER

SITE AND TRANSPORTATION SERVICES
NAC INTERNATIONAL
655 ENGINEERING DRIVE
NORCROSS, GA 30092
USA

ABSTRACT

DOE placed its transportation services contract with NAC International in April, 1997 and awarded the first task to NAC for return of TRIGA fuel in July, 1997. This initial shipment of TRIGA fuel, scheduled for early 1998, is reflective of many of the difficulties faced by DOE and the transportation services contractor in return of the foreign research reactor fuel to the United States:

- First time use of the INEEL dry storage facility for receipt of research reactor fuel
- Safety analysis of the INEEL facility for the NAC-LWT shipping cask
- Cask certification for a mixed loading of high enriched and low enriched TRIGA fuels
- Cask loading for standard length and extended length rods (instrumented and fuel follower control rods)
- Design and certification of a canister for degraded TRIGA fuel
- Initial port entry through the Naval Weapons Station in Concord, California

- Initial approval of the rail route for shipment from Concord to INEEL

The presentation will describe the overall activities involved in the first TRIGA shipment, discuss the actions required to resolve the difficulties identified above, and provide a status report of the initial shipment from South Korea and Indonesia. Recommendations will be presented as to actions that can be taken by the research reactor operator, by DOE, and by the transportation services agent to speed and simplify the transportation process. Actions having the potential to reduce costs to DOE and to reactor operators from high income economies will be identified.

1. Introduction

The initial shipment of foreign research reactor spent TRIGA fuel to the U.S. Department of Energy's Idaho National Engineering and Environmental Laboratory was scheduled to occur in January, 1998. This schedule was set by DOE to correspond with receipt of Congressional funding with which to complete the shipment in October, 1997. The shipment has yet to occur. As was the case for the initial foreign research reactor spent fuel shipments into the east coast port of Charleston, this first shipment of TRIGA fuel is restrained by institutional and legal processes far more than for technical issues. Municipal jurisdictions in the area around the Concord, California Naval Weapons Station port facility have challenged the DOE decision making process by which Concord was selected. The court hearing on this matter is scheduled for March with a decision by the judge in early April. Either side could appeal an unfavorable decision. The preceding sequence chain of events is very similar to those which transpired for east coast shipments, ultimately with a favorable outcome for DOE and for foreign research reactor operators. It remains to be seen what decision will be forthcoming for the west coast.

In spite of the delays due to legal maneuvering, resolution of the technical matters associated with the shipment have proceeded very well. While the shipment is complex due to a number of factors associated with the quality of the TRIGA rods and the infrastructure at the reactor sites, preparations are well advanced, awaiting the outcome of the litigation. The balance of the paper will elaborate on the institutional issues affecting the shipment as well as the technical issues and their resolution.

2. Institutional Preparations

DOE's plan for the use of a new surface transportation route within the U.S. for controversial radioactive shipments involves extensive interaction with Federal, state, local and tribal government agencies that might, directly, or indirectly, be affected by the shipment. This includes an offer to assist in emergency preparedness training for "first response" agencies along the totality of the route.

For the initial TRIGA shipments entering through the Concord Naval Weapons Station port, and traversing to the INEEL site through California, Nevada, Utah, and Idaho, these interactions had begun well in advance of NAC's contract for the shipment. Emergency preparedness training and public outreach was being performed by staff from INEEL assisted by personnel from the Eastern Idaho Technical College, a technical school local to the Idaho Falls destination. Participants in the sessions, held regionally along the shipment route, were very favorable relative to the training presented to them.

In the fall of 1997, the State of California appealed to DOE to delay the planned arrival in Concord from the January time period to late spring. The basis for this request was that it would permit additional organizations to be trained, and that it would avoid traversing the mountain passes separating California from Nevada during winter months. Secretary of Energy, Francisco Peña, eventually agreed to this request, rescheduling the shipment arrival for early April.

Not long after the concession by Secretary Peña, several municipalities around the Concord, California port facility brought suit against DOE relative to the shipment. Whereas the lawsuit brought by the State of South Carolina regarding east coast shipments challenged the legality of the Environmental Impact Statement prepared by DOE, the California lawsuit challenged the decision making process used by DOE to select the port of Concord. Port facilities in Seattle, Washington, Portland, Oregon, and Concord were considered as entry point for the west coast shipment. The lawsuit argues that considerations of proximity and population should have led DOE to select a port other than Concord. Neither California or the local jurisdictions have challenged the legality of the foreign research reactor spent fuel returns program. In fact, they have been supportive of the program, contesting only the choice of ports.

The initial hearing was originally set for early January. However, by agreement of DOE and the parties to the lawsuit, it was delayed until March. The March date will permit the hearing to address the arguments of the case, rather than preliminary information, and should facilitate an faster decision on the part of the judge. A ruling is currently scheduled for early April. Whether either party would appeal an unfavorable ruling is uncertain.

While the lawsuit has been underway, much of the other institutional planning has been suspended. The pending hearing has restrained the generally cooperative atmosphere between INEEL support personnel and regional agency staff that prevailed prior to filing of the lawsuit. Assuming that the suit is settled in DOE's favor, there appears to be no evidence that resumption of the interaction with regional agencies would be adversely affected. Nevertheless, the overall schedule for implementation of this first west coast shipment is directly tied to resolution of these issues.

3) Technical Preparations

Technical preparations have been proceeding in spite of the institutional delays affecting the shipment. The technical preparations have focused on three general areas: reactor site inspections, cask interface preparations at the INEEL receipt facility, and the licensing of the NAC-LWT cask for the various TRIGA fuels present in the shipment and fabrication of requisite cask hardware.

Four different foreign fuel storage sites are involved in the first TRIGA shipment, two in South Korea and two in Indonesia. Several different site inspection tours have occurred, both by DOE and INEEL staff and by the NAC transportation team. These inspections have involved determination of the technical parameters for the fuel (enrichments, burn-ups, cooling time, etc.) and assessment of the fuel condition. They have also examined the site infrastructure relative to cask handling, transportation routes to port facilities, and support requirements such as trucking, portable cranes, and security. Interaction with regulatory and customs officials has occurred as well. These elements of the shipment preparations are well advanced and should not restrain the shipment, presuming a favorable outcome of the institutional issues.

The preparation of a DOE facility for introduction of a new cask or fuel form is a rigorous process involving both physical demonstrations and safety analysis. The safety analysis is required to demonstrate that the fuel characteristics and configuration do not introduce an unacceptable criticality risk to the facility. These evaluations will address both the design configuration of the fuel, in fuel baskets or canisters, and a reasonable spectrum of off-normal configurations. Analyses consider various scenarios for dropped fuel interacting with fuel remaining in the cask or in storage in the facility.

The unloading sequence planned for TRIGA fuel involves the movement of the cask into a hot cell where individual baskets of fuel will be removed from the cask. The INEEL analyses have addressed this configuration and determined that normal and off-normal configurations are critically safe. Other analyses required of the facility safety analysis have examined weight loading of cranes and handling

devices, and the supporting calculations or load tests for grapples and cask handling yokes. Effort has been successfully concluded and is in place to support the arrival of the TRIGA shipment.

Trial (dry run) handling of the cask has also been completed. An empty NAC-LWT cask representative of that which will be used in the shipment was sent to INEEL for a week of trial handling operations. During this period, the full spectrum of operations that will be required during the shipment was exercised. This verified that the equipment, operating procedures, and personnel were prepared for the cask arrival. As is the case with the facility safety analysis, INEEL is prepared, both physically and procedurally, for receipt of the shipment.

The storage configuration decided upon by INEEL takes maximum advantage of the NAC-LWT configuration. INEEL determined that handling time and risk of handling related incidents could be minimized by utilization of the NAC-LWT fuel basket for subsequent storage. The approved concept of operations involves removal of the fuel basket from the cask and its placement in the dry storage facility storage module. With this approach, there is no need to handle individual TRIGA pins. The baskets provided by NAC will meet all storage requirements including restrictive weight limitations.

Licensing of the NAC-LWT cask for the TRIGA fuel is complicated by the diversity in materials, enrichments, and configurations represented by the fuel from the four facilities. Differing cladding materials, enrichments varying between 20% and 70% U-235, and the presence of instrumented fuel pins and fuel follower control rods are present in the mix of fuel forms to be returned. These variations have been addressed in the amendment prepared by NAC for the NAC-LWT cask license. The amendment has been completed by NAC and submitted to NRC for approval, as well as to the Competent Authorities in South Korea and Indonesia. At the time this paper was prepared, NRC had yet to act on the amendment request. Without question, the institutional delays associated with the lawsuit have had an indirect effect in delaying completion of regulatory action. Because of work load conflicts affecting the cask licensing group at NRC, TRIGA application has not received priority review. DOE has committed to address this issue so that licensing action does not restrain the shipment following culmination of legal actions.

Fabrication of fuel baskets and canisters has proceeded based on the NAC design, in spite of the lack of regulatory action. Both DOE and NAC are sufficiently confident in the NAC design to commit to the material procurement and fabrication. The basket design is dimensionally the same as the baskets for MTR fuel so that no re-engineering of the proven NAC dry transfer loading process is needed. The dry transfer equipment and procedures have been utilized for over 30 individual NAC-LWT cask shipments from 8 different reactor and hot cell facilities. The ability to use this equipment in South Korea and Indonesia without modification is a significant advantage in assuring that TRIGA fuel loading will occur in a safe and efficient manner. While some work remains to be completed, the required hardware will most certainly be available by the time institutional issues are resolved.

4) Conclusion

The history of foreign research reactor spent fuel shipments to the U.S. has been dominated by institutional rather than technical delays. The planning for the first shipment of TRIGA fuel into the Concord Naval Weapons Station is no exception. While NAC and the INEEL technical team have successfully completed the prerequisite technical tasks for the shipment, execution of the shipment is suspended pending the outcome of the lawsuit against DOE. If the experience from the east coast shipments prevails, DOE will ultimately receive a favorable judgement and the shipment will go forward. In the aftermath of the initial east coast shipment, public and political sentiment has become apathetic, and subsequent shipment have transpired without significant attention. However, both DOE and NAC have been counseled that the prevalent political and social climate in California is different than in South Carolina and one should not expect the east coast experience to be accurate. The fact that west coast shipments are widely separated in time exacerbates this difference.

What this experience suggests for the remainder of the TRIGA shipments is difficult to predict. The vast majority of TRIGA shipments are scheduled to arrive through the Charleston Naval Weapons Station in South Carolina. It is unlikely that their arrival in South Carolina will suffer any greater institutional burden than have the recent MTR shipments. However, the shipments must then be shipped by truck or rail from South Carolina to Idaho, a route covering two thirds of the U.S. While this route has been used by many domestic shipments without conflict, the attention given the foreign research reactor shipments has been extraordinary. By the time this route is activated, DOE will be shipping significant amounts of transuranic waste to the Waste Isolation Pilot Plant in New Mexico from various DOE sites. This may amplify the institutional resistance to the shipments or may serve to calm the situation. As the experience above indicates, technical issues associated with spent fuel shipments have proven far more amenable to prediction and solution than have the institutional ones.

ENCAPSULATION OF ILW RAFFINATE IN THE DOUNREAY CEMENTATION PLANT

CH0100358

G F Sinclair
Waste Management Group
UKAEA, Dounreay, Thurso, KW14 7TZ - United Kingdom

ABSTRACT

The Dounreay Cementation Plant has been designed and constraucted to encapsulate the first cycle liquid raffinate arising from the reprocessing of irradiated Reasearch Reactor fuel into a cementitious matrix. The acidic liquid waste is conditioned with sodium hydroxide prior to mixing with the cement powders (a 9:1 ratio of Blast Furnace Slag / Ordinary Portland Cement with 5% Lime). The complete cement mixing process is performed within the 500 litre drum which provides the waste package primary containment. The plant has recently been commissioned and has commenced routine operation, processing stocks of existing raffinate that has benn stored at Dounreay for up to 30 years. The waste loading per drum has been optimised within the constraints of the chemical composition of the raffinate, with an expected plant throughput of 2.5 m^3/week.

INTRODUCTION

The reprocessing of irradiated Research Reactor (RR) fuel has been performed on the Dounreay site since the early 1960's, with the first cycle raffinates being stored in large underground tanks (~70 m^3 capacity). The earliest raffinates have now been in storage for more than 30 years and by definition are classed as an Intermediate Level Waste (ILW) stream. It is UK Government policy to immobilise liquid ILW raffinates into a solid form at the earliest opportunity to reduce the overall risk to the workforce and public and minimise lifetime waste management costs. This has been implemented by the UKAEA for the above waste stream through a program of wasteform development culminating the construction and operation of the Dounreay Cementation Plant (DCP).

The DCP is a custom-built facility, specifically designed to incorporate the raffinate into a cementitious package, suitable for long-term storage and eventual disposal in a repository. The specific formulation has been determined following an extensive programme of development work resulting in a product which can be demonstrated to be 'essentially monolithic', with acceptable overall properties for the processing, storage, transport and disposal of these wastes. The plant design has been based upon a process to encapsulate the waste into a stainless steel 500 litre drum package, which complies with the current UK specification for long term disposal of ILW. The plant is currently programmed (over the next few years) to process the current stocks of RR raffinate held on site to facilitate eventual disposal to a national repository (when built). This work is performed such that the finished package meets with the anticipated criteria specified by Nirex, (and also overseas customers [3]) with an extensive quality assurance regime in place to fully demonstrate key product quality parameters.

PROCESS AND PLANT DESCRIPTION

The DCP has been specifically designed to condition and immobilise raffinate (1st cycle) arising from the reprocessing of RR fuel which is currently stored in large (~70 m^3) shielded stainless steel tanks. The contents of the tanks have been subjected to detailed analysis using quality assured

techniques to provide an accurate account of the relevant radionuclide and chemical species. The raffinate as received in the DCP is acidic with a typical analysis as indicated in Table 1. The anion deficiency (AD) represents the degree of hydroxylation of the unneutralised liquor, ie $Al(NO_3)_{3-x}.(OH)_x$ which consists of a mixture of basic aluminium nitrates.

Aluminium (molar)	'Anion Deficiency' (molar)	Total Alpha (Bq/ml)	Total Beta (Bq/ml)	Total Gamma (Bq/ml)	Cs-137 (Bq/ml)	Uranium (g/l)	Plutonium (g/l)
2.0	0.85	1.9 E5	2.0E8	4.8E7	5.0E7	0.09	< 0.005

Table 1 Typical Analytical Data for Unconditioned MTR Raffinate

The liquor is transferred in batches (~2.5m^3) via a dedicated pipeline from the adjacent Raffinate Storage Plant to the DCP Reception Vessel (RV) where it is resampled for a 'finger-print' analysis to confirm it's acceptability for encapsulation and assess the optimum addition of sodium hydroxide for conditioning prior to cementation. The neutralisation is carried out by adding the acidic raffinate to concentrated sodium hydroxide ensuring that an excess is always present. During neutralisation, the acidic aluminium nitrate is converted to sodium aluminate which is soluble in the excess sodium hydroxide. The soluble sodium aluminate subsequently dissociates into sodium hydroxide and insoluble aluminium hydroxide thereby removing 'soluble' aluminium from the liquor. Development work has demonstrated that high soluble aluminium values could cause set retardation and large shrinkages adversely affecting product quality. It is therefore essential that the neutralised solution is allowed to approach equilibrium prior to commencing encapsulation.

The specific cement powder formulation was evolved from an extensive programme of development work since the 1980's. The objectives were to identify a formulation which would give a satisfactory cementitious wasteform suitable for long term storage and disposal. Early work [1] confirmed that the preferred matrix materials for incorporating nitrate based wastes was a mixture of Blast Furnace Slag (BFS) and Ordinary Portland Cement (OPC) with a weight ratio of 9:1. The optimum waste/cement loading was also identified to be around 0.55 w/c. Later work [2] indicated that improved wasteform dimensional stability characteristics could be obtained by adding 5% lime ($Ca(OH_2)$) to the cement powder formulation. A wide range of product quality characteristics were checked and verified during the development programme including compressive strength, permeability, gas generation, dimensional stability, radiation stability, density, and heat output. The majority of these are relatively constant regardless of relatively minor variations in the waste and/or cement powder constituents, and it is perhaps the dimensional stability characteristic that is the most crucial in determining good long-term performance of wasteform. One of the key features is obtaining an 'essentially monolithic' block which will retain it's overall shape and still be handleable even if the drum is removed. The degree of cracking is a function of the product shrinkage during the cement curing process with experimental work indicating that shrinkages of less than 2500 microstrain after 90 days curing would result in an acceptable product. Tests on the formulation of BFS/OPC/lime used in the process have confirmed that the shrinkage is less than 2000 microstrain with rate of dimensional changes decreasing with time. Drums produced during inactive trials have also been sectioned and the outer drum removed to demonstrate that the degree of cracking is acceptable.

The drum itself is manufactured from 316S11 stainless steel and conforms to the specifications laid down by Nirex for long term storage and disposal of ILW in an underground repository, and is very similar to drums produced by BNFL for their comparable wastes. A schematic drawing of the drum in section is shown in Figure 1. It has overall dimensions of 800 mm diameter by 1190 mm high, with a drum body wall thickness of 2.5 mm and incorporates a 'standard' annular lifting feature in the lid flange of the drum. It also includes a captive mild steel paddle used to perform the cement mixing process within the drum and is vented through a sintered stainless steel filter (rated to 0.3

micron) to prevent any possibility of drum failure due to gas pressurisation. It is worth noting however that the potential for significant gas evolution (due to corrosion or radiolytical degradation, etc) from the wasteform is negligible. The package has been assessed for the effects of both internal and external corrosion, impact performance, and stability under storage conditions. These have all concluded that there are no features which would render the drum unhandleable after at least 50 years. Since the heat output from the drums due to radiolytical decay will be typically less than 3 W/drum there is no requirement to provide any cooling during either storage or future transport.

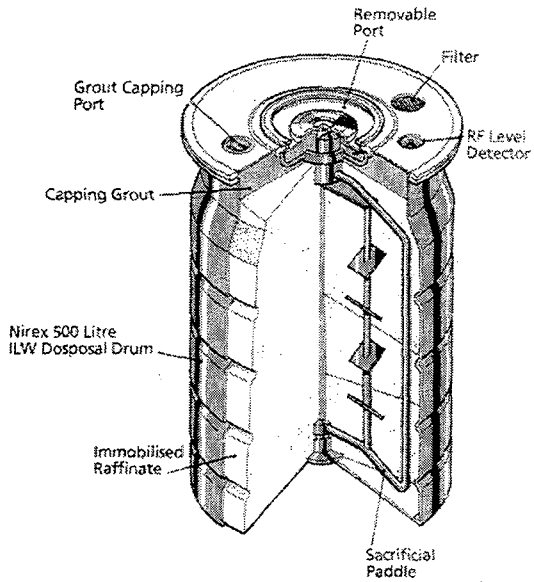

Figure 1 - DCP 500 litre Drum

The layout of the plant is shown schematically in Figures 2. Essentially the plant may be divided into three main areas, the chemical cell, the main handling cell (MHC), and the interim drum store (IDS), supported by the ancillary equipment and services. The receipt and conditioning of the raffinate is all performed within the chemical cell which houses the three main liquor vessels, ie the Reception, Mixing, and Washings Vessels with nominal volumes of 3.9 m^3, 5.8 m^3, and 3.9 m^3 respectively. The liquor transfer operations are all performed using fluidic pumps, with force lift steam ejectors provided as backup. The conditioning/neutralisation process is carried out in the Mixing Vessel: wher a predetermined quantity of sodium hydroxide is added to the vessel followed by the appropriate volume of raffinate. The vessel is continuously stirred to ensure that the precipitate formed is maintained in suspension and that the solution fed to the drums for cementation remains homogeneous. Once the conditioned liquor is ready for encapsulating, it is pumped up to the Transfer Pot vessel which is fitted with an overflow return line that has been set to give a constant volume of exactly 266 litres. This fixed volume is then drained by gravity directly into the drum already located at the Mixing Station in the MHC.

The drum is mated with a double-lidded port on the underside of the Mixing Station which is essentially a glovebox to provide containment and minimise the potential spread of contamination. All other areas within the shielded area of the MHC are thereby kept clean, significantly simplifying access to the cell when required (maintenance etc). The cement powders for each drum are weighed, mixed and transferred across to the Cement Hopper. They are then fed into the drum at a controlled rate as the drum is stirred via the captive in-drum paddle: the complete mixing process taking approximately 2 hours per drum. The active grout is allowed to stand for a minimum of 24 hours to ensure curing is complete before transfer along the MHC conveyor to the inspection and inactive grout cap stations. The void between the active grout and the underside of the drum lid is filled by topping up the drum with an inactive grout (3:1 Pulverised Fly Ash (PFA) : OPC). The external surfaces of the drum are swabbed to check for any surface contamination before transfer to the contiguous drum store. A drum decontamination facility is available should any drums require cleaning. A schematic diagramm of the DCP process is shown in Figure 3.

The interim drum store is of a vault design with the free-standing drums stacked up to 5 high and has capacity to hold 1200 drums (ie ~30 % of the current raffinate stocks). A drum store extension is currently under construction to accommodate the drums from the remaining volume of raffinate.

Provision has also been made for the installation of a drum export facility which is currently at the conceptual design stage. This will facilitate the transport of cemented drums to a national repository or other customers as appropriate.

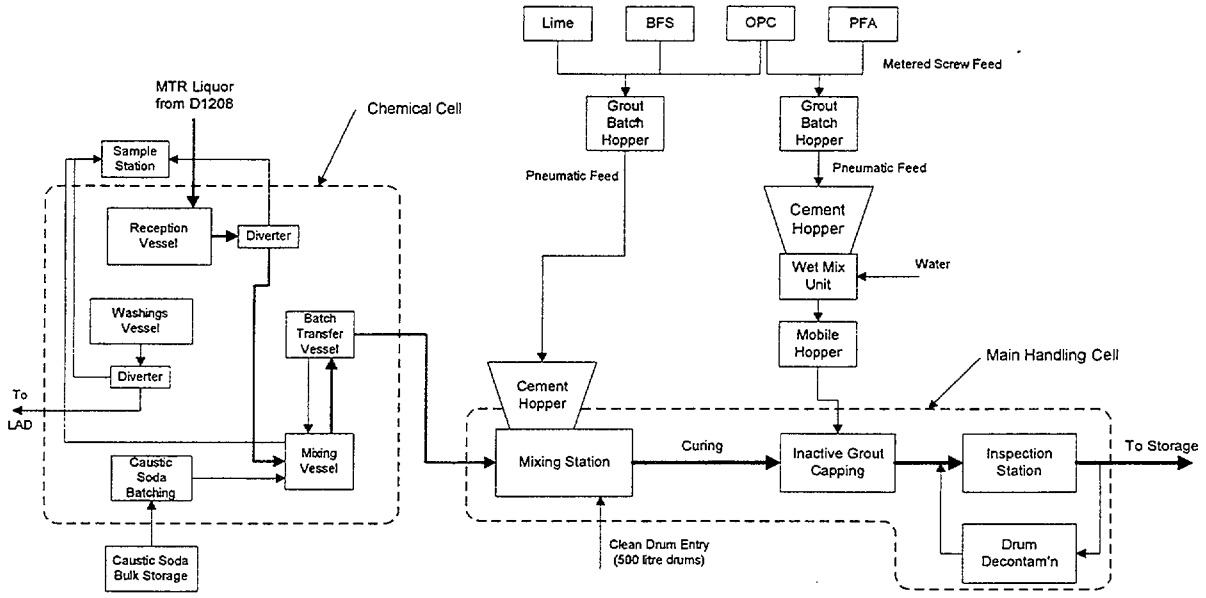

Figure 3 - Schematic Diagram of the DCP Cementation Process

OPERATIONAL EXPERIENCE

The plant was built and virtually ready to commence operations in the late 1980's when Nirex announced that it's standard drum package would be a 500 litre capacity stainless steel drum, rather than the 200 litre drum that the plant had been designed to produce. Consequently UKAEA decided to modify the plant to accommodate this key change and also take cognisance of other changes to the Dounreay site strategy for managing it's solid ILW streams. The cementation process aspects were modified and commissioned inactively during 1995. Consent to commence active commissioning was obtained from the regulators in late 1996 which culminated in a total of 120 drums being successfully processed through the plant. Regulatory consent to continue with full routine operation of the plant is expected in early 1998, to continue the programme of raffinate encapsulation for the next 7-10 years. Some of the key features of plant commissioning and operation to date are discussed below.

The inactive commissioning trials successfully demonstrated that the plant's operational envelope was well within the acceptable range of formulation variations which would still produce a fully satisfactory product. Only major process or plant failures, which would be noticed and corrected, would result in potentially out of specification product. A random selection of the drums produced during inactive commissioning were sectioned to confirm the homogenuity of the in-drum mixing and that the degree of cracking was acceptable, resulting in an essentially monolithic block. The destructive analysis also confirmed that parameters such as density, compressive strength, and voidage were all well within acceptance criteria.

Some minor contamination of the drum lid (localised to the filling port seal) was experienced during active commissioning: this has been addressed by improving the port design and dust disentrainmnet systems. The general radiation levels from the cemented drums have been measured at ~800 mSv/hr γ, comparing very favourably with the predicted value of 900 mSv/hr. The analysis of raffinate samples taken upon receipt of the liquor in the DCP have shown a high degree of consistency lending further confidence to the excellent homogenuity of the final encapsulated waste product.

The opportunity to further optimise the process was taken during the commissioning. The process flowsheet identified from the development work required the addition of up to 5 % excess sodium hydroxide to ensure that the conditioned liquor was always alkaline. However confidence in the operability of the plant allowed this excess to be removed thereby increasing the waste loading in the final cemented product. Ultimately however the waste loading is dependent upon the aluminium concentration and acidity of the raffinate to be conditioned.

The plant's ability to meet it's design throughput of 2.5 m^3 of raffinate per week, ie equivalent to ~14 drums/week, has been successfully demonstrated in the operations to date. The overall throughput is also being further optimised by reviewing the individual unit processes to identify opportunities for improvements.

Since the product waste drums will eventually be consigned to either a UK national repository or returned to overseas commercial customers as appropriate [3], it is vital that the key product quality parameters are recorded and documented in a fully auditable manner. Consequently the DCP process is covered by a fully developed record system in compliance with specific customer needs. The UKAEA at Dounreay is certificated to BS EN ISO 9001:1994 and BS5882:1996, with the plant quality assurance management system meeting these requirements.

REFERENCES

[1] C G Howard & D J Lee, Immobilisation of MTR Waste in Cement (Product Evluation), January 1988, AEEW-R 2312.

[2] T R Holland, C G Howard & D J Lee, Immobilisation of MTR Waste in Cement wsate form Reformulation Studies, April 1992, AEA-D&R-0344.

[3] Intermediate Level Residue Specification, Dounreay Cemented Liquid Wastes, February 1992.

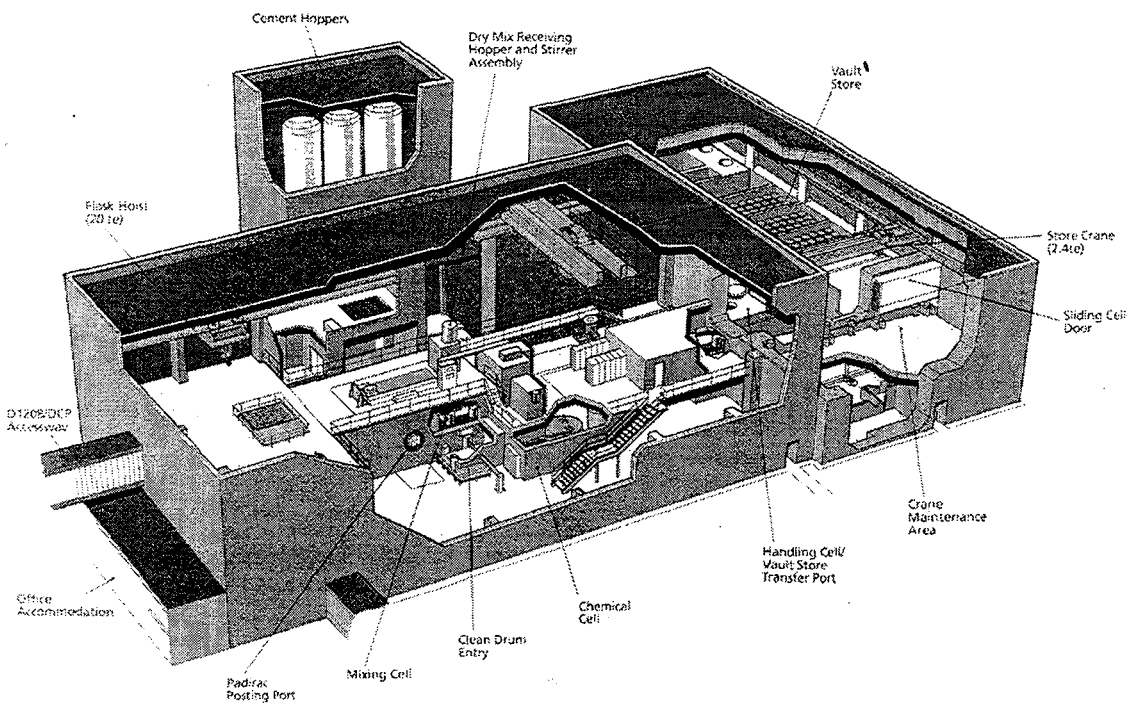

Figure 2 - Schematic Diagram of the Dounreay Cementation Plant

CH0100323

ASPECTS OF VVR-S SPENT FUEL MANAGEMENT

C. GÂRLEA, I. GÂRLEA, I. GRANCEA, A.I. OLTEANU, C. KELERMAN
National Institute of R&D for Physics and Nuclear Engineering - "Horia Hulubei" R-79617 Bucharest
PO Box MG-6 Romania

ABSTRACT

The management of two fuel types is presented, for the period 1957-1997. The research reactor VVR-S used EK-10 and S-36 fuel supplied by the former Soviet Union. There are described the status of the spent fuel and possible options for medium term storage.

1. Introduction

VVR-S - IPNE research reactor Bucharest - Romania, was started in July 1957. The designed nominal power is 2 MW, the reactor presently operating at the same power. The reactor is devoted to the radioisotopes production and researches [1]. For research are used 9 horizontal channels, equipped by different neutron spectrometry systems, a pneumatic rabbit and defractometers. A graphite thermal column, tangent at the core is used to host the both neutron density unit standards (thermal and intermediate - energy range) [2]. These standards are generated in:

- a spherical cavity ($\Phi = 50$ cm) in graphite thermal column
- $\Sigma\Sigma$ system: a multishell Uranium ball - 5 cm wall thickness with inner diameter 24.5 cm, and a B_4C screen, covered in Aluminium

The reactor has an average program of five days weekly, continuously, especially dedicated to radioisotope program. The thermal power developed up to the 1st of January 1997 was 9.31 GWd.

The used fuel initially fabricated was EK -10 type (10% ^{235}U enriched) up to the 14th of May 1984. After this data the fuel was progressively replaced with one of C-36 type (36.63% ^{235}U enriched). The mixed core worked up to the 21st of December 1996, when all the EK-10 fuel was spent, remaining in VVR-S core only C-36 fuel assemblies. The characteristics for the both types of fuel are gathered in Table 1.

Table 1. Fuel characteristics

Fuel type	Enrichment (%)	Length (mm)	Rod diameter (mm)	Cladding thickness (mm)	Fuel composition	Uranium weight (g)	Content	
							^{235}U (g)	^{238}U (g)
EK-10	10	500	10	2	ceramic mixture of U and Mg	80	8 ± 0.4	72
C-36	36.63	500	10	1.55	aluminum-uranium alloy	25.8	9.45 ± 0.8	16.35

Taking into account the enrichments and the different content of uranium per fuel rod, the genuine cassettes containing 16 rods of EK-10 fuel, have been modified as 15 rods in assembly of C-36. The ^{235}U content is different for each type of fuel assembly:

128g ^{235}U - EK-10
141.7g ^{235}U - C-36

These data are given in Table 2.

Table 2. Assembly characteristics

Assembly type	Rod number	Uranium weight (g)	^{235}U content (g)
EK-10	16	1280	128
C-36	15	387	141.75

The changing of fuel and the reactor operation with a mixed core was licensed based on the results of a research program (calculations and measurements). This program demonstrated that the neutron spectrum, the developed power and flux distribution in fuel assemblies do not provide hot points in the core [3,4].

After 40 years of operation, there is an inventory of spent fuel assemblies. This inventory is presented in Tables 3 and 4 for core, "at reactor" cooling pond and site storage.
The VVR-S spent fuel is stored in two pools:

- the reactor discharge pool in reactor hall, with a capacity of 60 assemblies. This cooling pond was built in the same time with the reactor.
- site storage, with 4 ponds containing 240 places for fuel assemblies, put in operation in 1980.

This "at reactor" pond is one for intermediary storage directly connected with reactor by a dry transfer channel. The electromagnetic device is positioned on the fuel assembly. This device takes the assembly and uplifts it in a special shield above rotary plugs of the reactor. Then the fuel assembly is placed in transfer channel and sent in the cooling pond. The release of the fuel assembly is performed under the water. These operations are currently made for replacing of the spent assemblies in normal operation or during the yearly maintenance, when the reactor is defuelled. The cooling time before the transfer in the external storage is about one year. The distance between the "at reactor" and site storage is less than 100m [5]. The transfer is performed by means of a flask for one fuel assembly. The flask is provided with a lifting equipment. The transfer is made by car, using the cranes in reactor hall and in site storage.

The wet storage outside of reactor has 4 ponds, with 60 places per pond. It can store all the VVR-S fuel reserve, up to the decommissioning of the reactor.

2. Spent fuel status

Presently in the site storage are stored 156 fuel assemblies, 155 EK-10 and one C-36.

In core are 50 assemblies, C-36 type, the burn-up on the 15th of December 1996 being presented in Table 3.

Presently, in the discharge storage are stored 13 fuel assemblies (one EK-10 type, considered as a noncompliance during the inspection). The average burn-up for these fuel assemblies is 38% (Table 4).

In reference [6] are gathered the data concerning exposure history, transfer operations and doses gathered at the flask wall. There is presented also the burn up for each fuel assembly. For the first 78 assemblies there is no burn-up measured. For them, the average burn-up was calculated based exposure history and reactor power in this period. The average burn-up is about 50%.

3. Medium term storage

Within the framework of the PHARE programme the EU has undertaken to fund a number of projects aimed at providing assistance to Eastern European Governments in ensuring the safety of their nuclear facilities. Following the recommendations of the CASSIOPEE Report [7], within the 1994 PHARE nuclear safety programme, an activity was introduced within the regional programme covering the safe disposal of spent fuel from Soviet-designed Research Reactors within the region.

The method of spent fuel storage at all of these reactors was wet storage of the fuel in a dedicated fuel pond on site, prior to final disposal. Some of the spent fuel is now over 40 years old and there is general concern about fuel degradation: evidence of corrosion pitting of fuel cladding has already been observed in one reactor, resulting in the release of alpha activity into the pond water.

The analysis by gamma spectrometry of the water in Magurele storage show the following activities in the ponds for ^{137}Cs:

Table 3. DETAILS OF CURRENT CORE INVENTORY OF FUEL

	Fuel Assembly Identifier		Date loaded into Reactor		Burnup % at 15/12/96	
1	C-63		05.06.95		15,93	
2	C-60		04.07.94		20,8	
3	C-56		11.10.93		30	
4	C-66		11.03.96		5,6	
5	C-65		11.12.95		8,9	
6	C-64		23.10.95		12,8	
7	C-62		13.03.95		19,18	
8	C-49		20.04.92		45,21	
9	C-46		22/8/91		47,89	
10	C-61		14/11/94		14,24	
11	C-59		30/5/94		16,48	
12	C-54		22/3/93		29,68	
13	C-58		02.07.94		28,88	
14	C-50		03.09.92		42,94	
15	C-51		06.08.92		31,54	
16	C-48		27/1/92		33,18	
17	C-52		20/7/92		39,77	
18	C-28		03.11.91		48,4	
19	C-55		05.10.93		35,25	
20	C-68		24/6/96		3,68	
21	C-35		10.09.89		41,51	
22	C-53		02.01.93		28,5	
23	C-47		18/11/91		51,8	
24	C-27		04.10.89		51,28	
25	C-43		06.11.90		48,19	
26	C-34		05.06.91		44,13	
27	C-42		14/5/90		57,02	
28	C-40		11.06.90		48,8	
29	C-31		06.05.89		54,34	
30	C-44		17/9/90		41,32	
31	C-36		11.06.89		39,3	
32	C-32		31/7/89		50,1	
33	C-57		30/8/93		45,23	
34	C-24		27/6/88		43,43	
35	C-70		21/10/96		0,5	
36	C-15		01.12.87		60,44	
37	C-67		06.03.96		1,95	
38	C-22		04.04.88		52,11	
39	C-39		02.12.90		54,57	
40	C-20		16/1/88		43,87	
41	C-33		09.11.89		52,11	
42	C-37		22/10/90		53,36	
43	C-21		02.08.88		43,45	
44	C-16		13/4/87		47,26	
45	C-23		06.06.88		57,68	
46	C-41		04.09.90		45,74	
47	C-26		20/2/89		46,69	
48	C-25		14/11/88		52,04	
49	C-17		06.08.87		54,41	
50	C-45		06.10.91		48,77	
average burnup of current core					**37,805**	

pond 2 2650 Bq/l
pond 3 36000 Bq/l
pond 4 2500 Bq/l

There are in principle three ways of dealing with the fuel in the long term i.e. reprocessing, dry storage and wet storage. On the grounds of cost and lack of suitable reprocessing facilities, dry storage at or near each reactor site is preferred. A project is therefor required to identify a suitable generic solution, followed by a pilot project at one of the sites to demonstrate this generic solution. The reactor site at Magurele would been selected as the location of this pilot project because of the imminent final closure of the reactor.

The primary objectives of a dry storage project are:

- To characterize the spent fuel in terms of radioactive inventory, physical condition and heat output.
- To identify a suitable container(s) for long-term dry storage of the fuel.
- To propose how the selected fuel container(s) should be located, monitored and maintained during the storage period.

The fuel must be characterize with regard to radioactivity, physical condition and heat output:

- The radioactivity assessment requires quantification of total specific activity and specific activities for each identified radionuclide over periods of time that are relevant to long term storage.
- The heat output assessment requires quantification of decay heat output over periods of time relevant to long term storage.
- The fuel condition assessment requires assessment of the factors affecting fuel physical condition including materials properties, corrosion mechanisms, current geometry and material composition: the assessment should also consider how to ensure adequate inspectability of fuel designs.

A number of designs of containers for the dry storage of fuel already exist in various countries, the majority having been designed to meet IAEA guidelines. Because of the costs associated with designing and obtaining regulatory approval for a purpose-built container, it would be desirable to use an existing design for storage of VVR-S spent fuel. The task is therefore:

- To identify existing container designs which could be suitable for VVR-S fuel (possibly with minor modification). When selecting suitable containers consideration should be given to: compatibility with the fuel in terms of geometry and construction material; inspection criteria and monitoring requirements; operational history; shielding and operator dose uptake; and accident resistance, including criticality avoidance.
- To demonstrate that the preferred option is the optimum solution. This may be done by formal decision analysis or other suitable and auditable method(s).

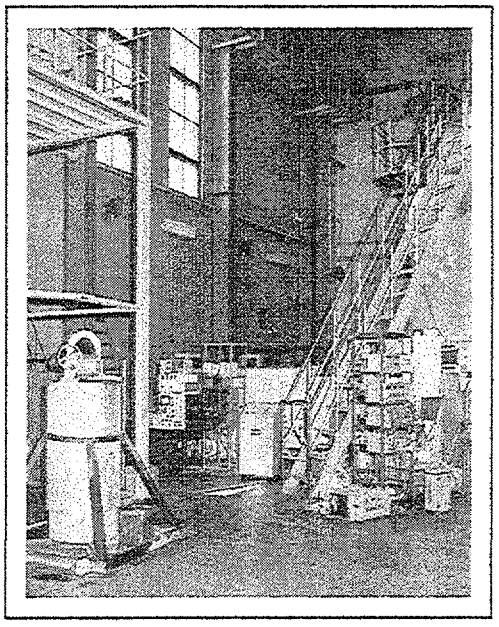

Figure 1. Fuel cask

In the process of identifying the technical specification for the design and preferred location of the fuel store, the criteria for assessment must first be defined and agreed. The options for location i.e. on-site or off-site should be assessed against the following suggested criteria:

- Ground conditions
- Seismic resistance
- Weather resistance
- Accessibility for transport
- Availability for inspection

- Public acceptability
- Dose uptake by operators and public
- Environmental monitoring requirements

Presently, the National Institute of Physics and Nuclear Engineering develops a research program for characterization of the spent fuel state - budget sponsored, in the above mentioned.

The Romanian Government applied in 1996 to UE for a national program:
"Dry Storage of VVR-S Research Reactor Spent Fuel". In the same frame was promoted an application for other national assistance project in DG I - UE: "Decommissioning of VVR-S Research Reactor and Refurbishment of the Associated Waste Facilities at Magurele Romania".

Table 4. SPENT FUEL IN COOLING POND AT 6/1/97, EXCLUDING CURRENT CORE INVENTORY

	Fuel Type	Fuel Identifier	Date Loaded to Reactor	Date Discharged to Cooling Pond	Burn up %
1	S-36	C-12	02.10.86	29/6/96	55,7
2	S-36	C-13	07.07.86	21/10/96	46,4
3	S-36	C-09	07.01.85	06.05.95	59,2
4	S-36	C-06	03.11.85	23/10/95	57
5	S-36	C-01	15/10/84	12.11.95	47,1
6	S-36	C-08	27/5/85	03.11.96	55,5
7	S-36	C-11	01.10.86	06.03.96	60
8	S-36	C-03	06.11.84	14/11/94	50,2
9	S-36	C-04	14/5/84	02.07.94	56,1
10	S-36	C-07	04.01.85	30/5/94	62,8
11	S-36	C-19	26/10/87	07.04.94	50,1
12	S-36	C-05	18/2/85	13/3/95	57,4
13	EK-10				0
Note: The EK-10 assembly was outside tolerances on inspection and not loaded into core					
Average burn-up of S-36 assemblies					17440,8333

4. Conclusions

1. The dry storage of VVR-S Magurele spent fuel is the proper solution for medium term.
2. The spent fuel storage for Soviet designed research reactors will be common for all the owners of this type of facilities.

References

1. I.Gârlea - Decommissioning Plan for VVR-S IPNE Research Reactor Bucharest, June 1996
2. I.Garlea, C.Miron - ΣΣ-ITN facility - intermediate energy neutron source for reactor dosimetry, Rev.Roum.Phys.,Tome 26, No.7,643, (1981)
3. I.Garlea, C.Miron-Garlea, S.Rapeanu, M.Ion, V.Raducu - Opredelenie spectra neitronov potoka i microraspredelenia potokov kasetah tipa EK-10 i S-36 v teliah progressivnoi zameni otrabotav topliva tipa EK-10 na S-36 (in lb.rusa) Rev.Roum.Phys.,Tome 30, No.3,197 (1985)
4. C.Miron-Garlea, I.Garlea, V.Raducu - Neutron spectra in some channels of VVR-S reactor Rev.Roum.Phys.,Tome 31, No.8,813 (1986)
5. IAEA Design Information Questionnaire - Vienna, Nov. 1976
6. D.Mocioiu, D.Ene, F.Tigau, N.Visan – Caracterizarea prin calcul a inventarului radioactiv, debitului dozei gamma si a caldurii degajate in casetele de combustibil ars in reactorul nuclear VVR-S IFIN, Bucuresti, Magurele (1997)
7. Review of Nuclear Waste Management Schemes in PHARE Countries - Annex for Romania (PHARE Programme Contract ZZ.92.17/01.01/B006, issued by CASSIOPEE, March 1994)