ENVIRONMENTAL AND WASTE MANAGEMENT: ADVANCEMENTS THROUGH THE ENVIRONMENTAL MANAGEMENT SCIENCE PROGRAM

Organized by

T. Zachry

Symposia Papers Presented Before the Division of Environmental Chemistry
American Chemical Society
Anaheim, CA March 28 – April 1, 2004

DECOMPOSITION OF PERFLUOROCOMPOUNDS ON ALUMINA-BASED CATALYST

Shuichi Kanno[1], Shin Tamata[2] and Hideaki Kurokawa[3]
[1]Power & Industrial Systems R&D Laboratory, Hitachi, Ltd., 832-2 Horiguchi, Hitachinaka-shi, Ibaraki-ken, 312-0034, Japan
[2]Hitachi Works, Hitachi, Ltd., 3-1-1 Saiwai-cho, Hitachi-shi, Ibaraki-ken, 317, Japan
[3]Power & Industrial Systems Environmental Systems Business Div., Hitachi, Ltd., 4-6 Kanda-Surugadai, Chiyoda-ku, Tokyo, 101-8010, Japan
shuuichi_kanno@pis.hitachi.co.jp

INTRODUCTION

The control of the atmospheric release of perfluorocompounds (PFCs) is an important environmental problem worldwide. PFCs are used by the semiconductor and the liquid crystal industries as etching and cleaning agents. However, PFCs are powerful greenhouse gases (Dutrow, 1996). In 1997, PFCs became one of the important targets for reduction in COP3 (United Nations Framework Convention on Climate Change Conference of the Parties-3, also referred to as the Kyoto Protocol). On April 23, 1999, the WSC (World Semiconductor Council) announced its goal to reduce PFC emissions by 10% or more by the year 2010.

Semiconductor industries are trying to reduce their emissions by taking several approaches: optimizing manufacturing processes, using alternative chemicals, recycling materials and decomposing wastes. Decomposition methods such as combustion, plasma, chemical adsorption and so on are currently being studied. We have been studying a catalyst method. A catalyst system is able to decompose PFCs by more than 99%. Furthermore, this is safer and less costly compared to some conventional methods. Its impact as an environmentally compatible and friendly technology to reduce PFC emissions is large.

In this study, we investigated a catalyst that decomposes SF_6 with coexisting chlorine as impurities. A high concentration of CF_4 was decomposed during 4000 hours of catalyst use. We also investigated a large-scale decomposition system.

MATERIALS AND METHODS

Catalyst preparation

Single oxide catalysts were prepared from commercial metal oxides having a diameter of 2-4 mm. These particles were pulverized and sieved to sizes ranging between 0.5-1 mm. Binary oxide catalysts were prepared using a kneading method. The powder from the raw materials was mixed with several metal nitrates or metal precursors in the presence of H_2O. The mixtures were dried and calcined in air. The calcined catalysts were then pulverized and sieved to sizes ranging between 0.5-1 mm.

Measurement of activity

The experimental apparatus used to measure the PFC decomposition activity of catalysts is shown in Figure 1. We used a conventional fixed bed flow reactor. The apparatus consisted of PFC and Cl_2 gas cylinders, a catalyst reactor, water scrubbers, mist catchers and moisture absorbers. A reactant gas mixture of PFC, H_2O, air and N_2, was fed with a space velocity (SV) of 1,000-3,000h^{-1}. The PFC concentration varied within a range of 0.5-1.5 vol%. The volume of H_2O (water vapor) was 25-50 times as large as that of PFC. The concentration of PFC was measured with a gas chromatograph using either FID or TCD detectors and the conversion ratio was calculated from the concentration differences.

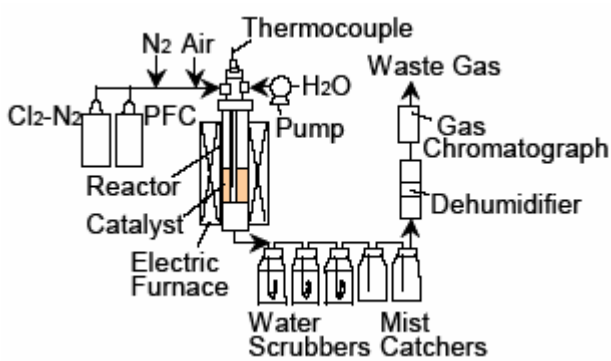

Figure 1. Experimental apparatus to measure the PFC decomposition ratio of catalysts.

Catalyst analyses

The X-ray diffraction patterns were measured with a Rigaku Denki RU-200 X-ray analyzer. Adsorption isotherms of nitrogen on catalysts were measured by a volumetric method using a Shimazu Accusorb-2100. The specific surface area was calculated using the B.E.T. equation from the nitrogen adsorption isotherms.

RESULTS AND DISCUSSION

Reaction in the presence of chlorine

We found previously that Al_2O_3 showed a high decomposition ratio for C_2F_6 when we surveyed single-oxide catalysts (Kanno *et al*., 1998). Also, by addition of another metal-

oxide, we improved the decomposition ratio and durability of our original catalyst (Kanno *et al*., 2000). Not only PFC but also chlorine might coexist in the waste gas from some etching devices. In this study, the influence of chlorine as impurity regarding SF_6 decomposition ratio was examined. SF_6 was used as an etching agent of poly-silicon etcher. Figure 2 shows the temperature profile when chlorine is present and when it is not. No change of activity was detected for chlorine coexistence. That is, chlorine did not inhibit SF_6 decomposition reaction on the catalyst. A short durability test during 8 hours at 750 degrees Celsius was carried out under the same gas conditions. SF_6 was decomposed at more than 99% during the test and chlorine concentration in the outlet gas was less than TLV of the gas. The catalyst was analyzed after the short durability test. No chlorine compounds were found by X-ray diffraction for the used catalyst. We should clarify chlorine adsorption on the catalyst surface in a longer durability test.

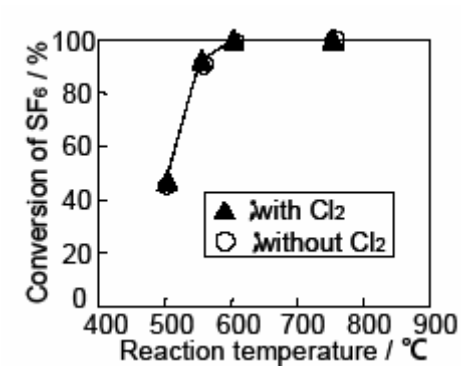

Figure 2. Decomposition of SF_6 in the presence of Cl_2. Reaction conditions: SF_6; 0.42 vol%, Cl_2 ; 0.04 vol%

It was surprising that the chlorine does not inhibit the surface catalytic reaction for PFC. Some of the chlorine formed while in the pre-heat room and the rest of the chlorine was fed to the catalyst layer. Prolonged presence of adsorbed chlorine is not favorable as it may react with the catalyst. This causes deactivation of the catalyst, not to mention the possibility of reaction inhibition. However, judging from the data obtained, adsorption of chlorine caused no problem regarding PFC decomposition. No indication of chlorine compounds indicated there was a smooth transformation of adsorbed chlorine to hydrochloric acid and hypochlorous acid as in the gas-phase. And the hydrogenation of chlorine did not inhibit the PFC decomposition reaction taking place in its neighborhood.

<u>High PFC concentration</u>

As the efficiency of nitrogen dry pumps improves by being able to use less nitrogen, the concentrations of PFCs in the exhaust gas increase. Experiments with higher than a typical concentration of 0.5% have been performed to check the initial activity of the catalyst and durability of the catalyst for long time use. The decomposition conditions were 1.4% CF_4 concentration and 750 degrees Celsius. The conversion remained higher than 99% throughout 4014 hours. The catalyst remained stable under the high hydrogen fluoride concentration and it could maintain a high conversion for a long time. The specific surface area was decreased from 110 m^2/g to 19 m^2/g.

Large-scale commercial system

As a point-of-use PFC decomposition system, we commercialized Catalytic Decomposition Systems (CD-60, 120 and 200). These apparatuses can treat 60, 120 and 200 liters per minute of PFC gas. While these set in the clean room of semiconductor facilities, it is also necessary to treat the whole semiconductor facility by an abatement system. This is possible with catalytic systems because the catalyst process is easy to scale-up. We designed a total treatment system that can decompose PFC at the rate of 3,000 liters per minute (CD-3000). A schematic view of the planned system is shown in Figure 3. It is $3.3m_W \times 8.1m_D \times 2.7m_H$. First, the etching gas including PFC is fed to the pre-spray tower to reject impurities. The reaction gas, PFC, water and air, is heated by the first heating tower. A catalyst bed is in the second heating tower and carbon-based PFC is converted to CO_2 and HF. HF is removed from the gas in the post-spray tower. This catalytic system has many merits. The catalyst reaction achieves a high decomposition ratio. Furthermore, the exhaust gas and consumption energy are less compared to conventional methods and safety is assured.

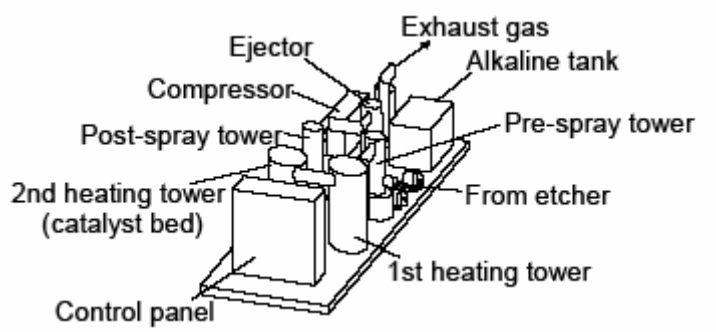

Figure 3. A schematic view of the large treatment system (CD-3000).

REFERENCES

E. A. Dutrow, 1996. A partnership with the semiconductor industry for reduction of PFC emissions. PFC Technical Update, edited by SEMI (SEMICON WEST 96).1.

S. Kanno, S. Ikeda, H. Yamashita, S. Azuhata, K. Irie and S. Tamata, 1998. Catalytic decomposition of perfluorocompounds. *Mat. Res. Soc. Symp. Proc.* **497**, 59.

S. Kanno, S. Ichikawa, H. Yamashita, S.Tamata and H. Kurokawa, 2000. Catalytic decomposition of perfluorocompounds. *219th ACS National Meeting*.