ENVIRONMENTAL AND WASTE MANAGEMENT: ADVANCEMENTS THROUGH THE ENVIRONMENTAL MANAGEMENT SCIENCE PROGRAM

Organized by

T. Zachry

Symposia Papers Presented Before the Division of Environmental Chemistry
American Chemical Society
Anaheim, CA March 28 – April 1, 2004

EFFECTS OF PRECIPITATION ON THE LOW-FREQUENCY ELECTRICAL PROPERTIES OF Fe^0 AND IMPLICATIONS FOR MONITORING PRBs

Jaeyoung Choi, Yuxin Wu and Lee Slater
Dept. of Earth & Environmental Sci., Rutgers Univ., 195 Univ. Ave., Newark, NJ 07102

INTRODUCTION

Non-invasive methods for the assessment and monitoring of PRB are required for evaluating long-term PRB performance and allowing effective management decisions regarding *in situ* site cleanup[1]. The presence of metal in the subsurface results in the following charge transfer mechanisms (a) electronic conduction in the metal and (b) polarization of charges at the interface between a metal and the pore-filling electrolyte[2-4]. These mechanisms modify the measured electrical properties of the subsurface and suggest the utilization of electrical measurements for investigating PRBs. In the low frequency range (0.1-1000 Hz), electrical properties are controlled by ionic conduction through the electrolyte, surface electronic or ionic conduction, as well as diffusion mechanisms that occur at the mineral surface-pore fluid interface[2]. Oxidation-reduction reactions may transfer electrons between mineral and fluid, and the magnitude of polarization is directly related to the amount of metallic mineral surface available for charge transfer[4,5]. The frequency dependence of the low frequency electrical response may be indicative of the nature of electrochemical reactions occurring at the grain-fluid interface[5]. Numerous experimental studies confirm that the frequency at which imaginary conductivity peaks inversely correlates with the grain size of the metallic particles[2,5]. In this study, measurements focused on the sensitivity of induced polarization measurements to changes in Fe^0 surface chemistry with ageing of the iron due to induced mineral precipitation, as well as the controls of electrochemistry on measured IP parameters. We monitored the electrical response for exchange of chlorinated solvent concentration and measured Eh, pH and fluid electrical conductivity to determine the interpretation of electrical signatures.

MATERIALS AND METHODS

Column design and instrumentation

The basic column experiment design is based on recommendations outlined in Gavaskar *et al.*[1]. Figure 1 shows that column set up for monitoring of reactive iron performance using electrical, geochemical and hydraulic measurements. Sample needle (sn) and electrical (e) sampling locations along the column are shown. We integrated this standard column with appropriate instrumentation for temporal monitoring of low-frequency (0.1-1000 Hz) electrical properties. The IP instrumentation is based around a NI 4551 two-channel dynamic signal analyzer. Accuracy of the electrical measurements is carefully assessed by measurements on resistor capacitor networks as well as standard water samples for which the magnitude and phase response can be predicted. The maximum measurement error on the real and imaginary conductivities is typically 1% and 5% respectively.

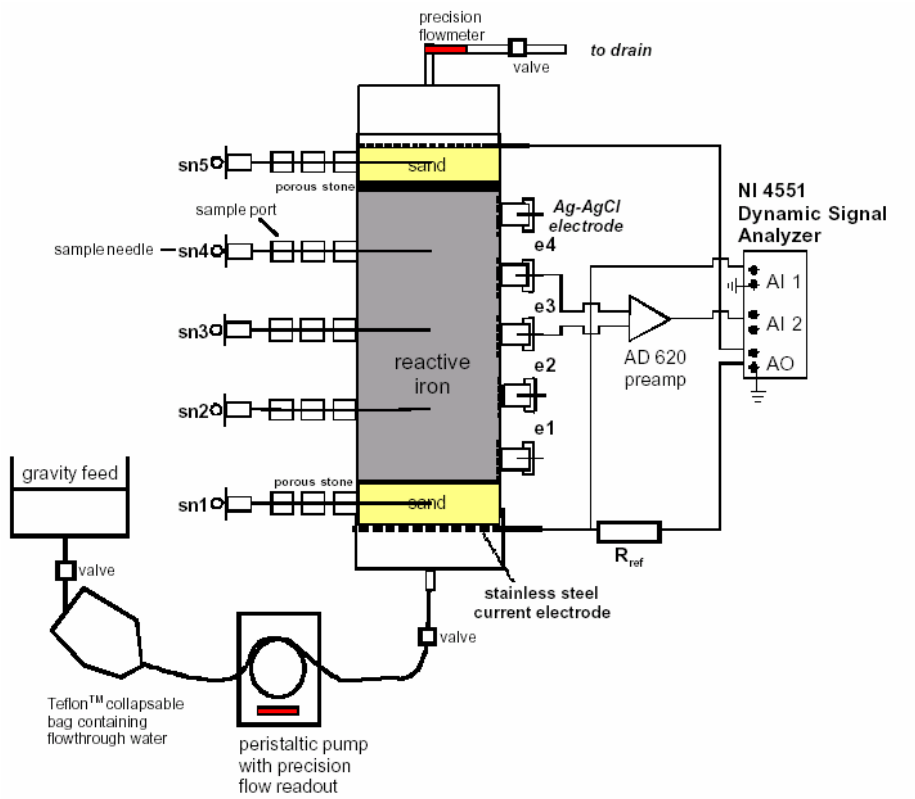

Figure 1. Schematic of column experiments used for jointly measuring the electrical and geochemical properties of Fe^0 columns

Surface area

The surface areas of each Ottawa sand/Fe^0 granules mixture were measured by BET method. Triplicate samples were prepared for measuring the surface area.

Effects of % Fe on IP response

The PVC columns (5.5×1.0 inches) were constructed containing Ottawa sand/Fe^0 granules mixture. The ratio of Ottawa sand/Fe^0 granules were changed from 999 to 9 as

a volume to volume. Approximately 1 L of 0.001-1.0 M for $NaNO_3$, NaCl, $CaNO_3$ and $CaCl_2$ solutions was passed through each column. The electrical conductivity of fluid was adjusted to about 1 mS/cm in an attempt to maintain fluid conductivity. Each influent solution was fed to a column by gravity siphon under a constant head, with flow from bottom to top. After reaching the equilibrium of electrical conductivity, the IP response was measured using a HP35665 signal analyzer.

Effects of fluid chemistry on IP response

The same PVC columns and background solutions described above were used to test: 1) if different cationic charge in system can affect the IP response and 2) if different anions existed in system can affect the IP response. The ratio of Ottawa sand/Fe^0 granules were fixed as (a) Ottawa sand 95% and Fe^0 granules 5% (v/v) and (b) Ottawa sand 90% and Fe^0 granules 10% (v/v). A control sample was prepared for measuring IP response with DI water (electrical conductivity=10 μS/cm). All samples were equilibrated for 1-2 days before measuring the IP response.

Effects of pH on IP response

The ratio of Ottawa sand/Fe^0 granules were fixed as 18 (Ottawa sand 95% and Fe^0 granules 5%, v/v). Sodium nitrate (0.01M) was used for this experiment as a background solution. This experiment was conducted at six pH values (1.5, 3.0, 5.5, 7.0, 8.5 and 10.5) by adding small amounts of 1 M HNO_3 or 1 M NaOH. After reaching target pH, transport experiments were conducted at room temperature (295.5 ± 0.5 K). All samples were equilibrated around 1 or 2 days followed measuring the IP response.

Effects of Precipitation of Fe on IP response

The effects of Fe-precipitation by OH, SO_4, PO_4 and CO_3 on electrical parameters were investigated for Fe-sand samples (10% Fe^0) over a 1 month period of induced precipitation at a specific discharge of 4.3 cm/h. Effluent samples were collected and analyzed for pH, Eh, fluid conductivity, and total Fe concentrations. IP responses were measured with HP35665 signal analyzer at each time periods (0, 1, 2 and 3 months). Aqueous chemistry was simultaneously monitored and Fe^0 surface precipitation verified by x-ray diffraction (XRD) and scanning electron microscopy with energy dispersive x-ray detector (SEM-EDX) on completion of the experiments

Modeling

For conducting all experiments above, MINTEQA2 was used to test for the potential precipitation of chemicals in systems before conducting experiments. Due to uncertainty in the underlying physicochemical model for the electrical properties of Fe^0 - sand mixtures, we utilize a Cole-Cole dispersion model for fitting a conduction magnitude ($1/\rho_0$), polarization magnitude (m/ρ_0) and characteristic polarization relaxation time (τ) term to the observed frequency-dependent electrical response of our samples

$$\rho^* = \rho_0\left[1 - m\left(1 - \frac{1}{1+(\omega\tau)^c}\right)\right] \quad (1)$$

where ρ_0 is the dc resistivity, m is the chargeability and c is a shape parameter defining the slope of the frequency dependence. The time constant (τ) of this distribution is theoretically and empirically correlated with metallic particle size[2]. We note the possibility of monitoring reduction in PRB performance from [1] reduced m/ρ_0 due to reduction in Fe^0 surface area associated with precipitation [2] increase in τ as a result of increasing grain size during precipitation.

RESULTS AND DISCUSSION

Laboratory measurements showed high sensitivity of electrical parameters defining the magnitude of ionic polarization at/near the metal surface to total Fe^0 surface area (Fig 2). Both the magnitude of the polarization and the characteristic time of the relaxation mechanism (time constant) are strongly correlated with electrolyte activity for 0.001-1.0 M for $NaNO_3$, NaCl, $CaNO_3$ and $CaCl_2$ solutions (Fig. 3). Polarization magnitude and time constant also both show sensitivity to the valence of cations used in this study (Fig. 3). The dependence of the time constant on electrolyte activity and valence is consistent with electrical double-layer (EDL) theory for the thickness of the EDL, although the exact electrochemical nature of the dominant polarization mechanism observed with our electrical measurements is considered uncertain. Polarization magnitude showed no relationship to pH across the range 1.5-10.5, which may indicate that the fixed surface charge does not contribute to the induced polarization response. Initial results of the ongoing Fe-precipitation experiments indicate that IP is sufficiently sensitive to electrochemical modification caused by precipitation to permit PRB monitoring.

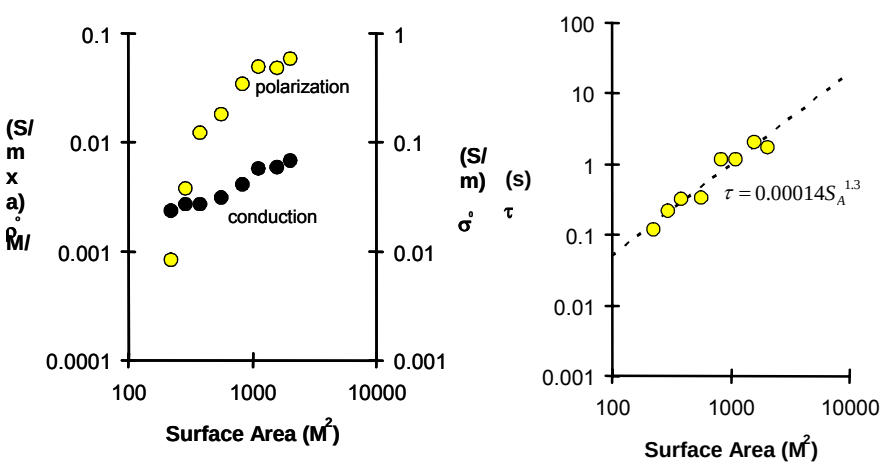

Figure 2. Conduction, polarization and relaxation time as a function of Fe0 surface area (0-75% Fe0 by volume; 0.01 M $NaNO_3$)

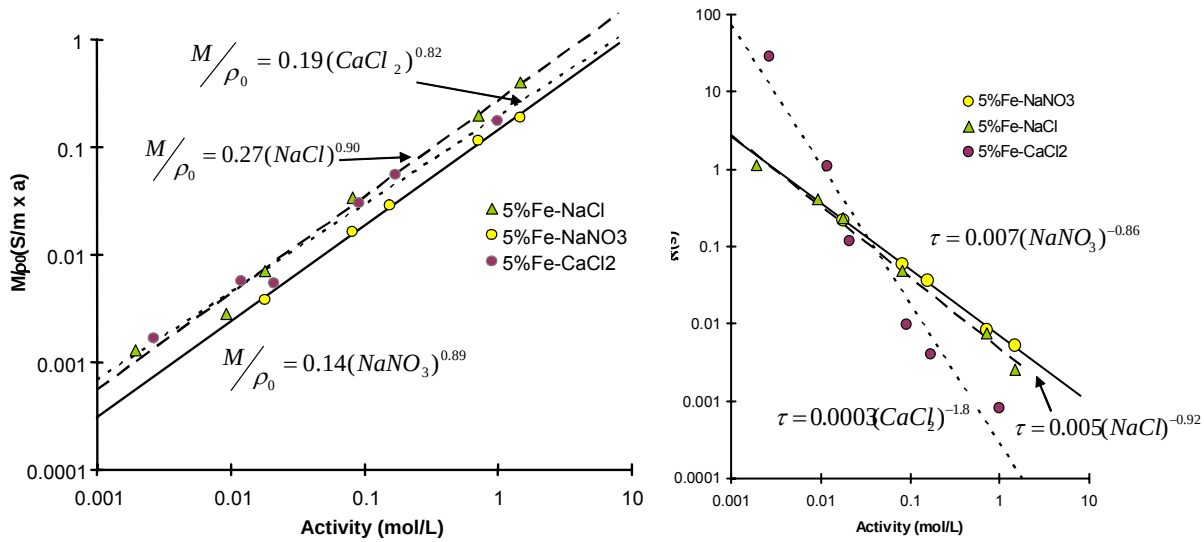

Figure 3. Electrical parameters as a function of electrolyte activity and valence (a) polarization magnitude (b) characteristic relaxation time

REFERENCES

1. Gavaskar, A.R., Gupta, N., Sass, B.M., Janosy, R.J. and O'Sullivan, D. (1998). *Permeable reactive barriers for groundwater remediation*, Batelle Press, Columbus, OH, pp1-176.
2. Pelton, W.H., Ward, S.H., Hallof, P.G., Sill, W.R. and Nelson, P.H. (1978). *Geophysics*, **43**, 588-609.
3. Vanhala, H. and Peltoniemi, M. (1992). *Geophysics*, **57,** 1545-1555.
4. Seigel, H.O., Vanhala, H. and Nicholas Sheard, S. (1997). *Geophysics*, **62**, 1394-1408.
5. Olhoeft, G.R. (1985). *Geophysics*, **50**, 2492-2503.