ENVIRONMENTAL AND WASTE MANAGEMENT: ADVANCEMENTS THROUGH THE ENVIRONMENTAL MANAGEMENT SCIENCE PROGRAM

Organized by

T. Zachry

Symposia Papers Presented Before the Division of Environmental Chemistry
American Chemical Society
Anaheim, CA March 28 – April 1, 2004

QUANTITATION OF ORGANICS IN SUPERCRITICAL FLUID AGING EXPERIMENTS USING FTIR SPECTROSCOPY

Christopher J. Thompson, Robert G. Riley, James E. Amonette and Paul L. Gassman
Pacific Northwest National Laboratory, P.O. Box 999, Richland, WA 99352
Chris.Thompson@pnl.gov, Fax: 509-372-1704

INTRODUCTION

Aging is a term used to describe the slow accumulation of hydrophobic organic compounds in the mineral pores and natural organic matter of soils and sediments over extended periods of time (*e.g.*, decades). Contaminants in aged materials exhibit decreased bioavailability and slow release to the environment. Therefore, aging may have a significant influence on the applicability and effectiveness of remediation strategies (*e.g.*, bioremediation and natural attenuation) and the accuracy of numerical transport models. Efforts to understand and quantify the effects of aging have been hindered by an inability to accurately simulate the aging process on a short timescale. Previous research in our laboratory has demonstrated that circulating supercritical CO_2 (SC-CO_2) can be used to rapidly prepare artificially aged materials for studying slow-release behavior[1]. One of the key features of this methodology has been the ability to monitor the progress of the simulated aging process in real time using an in-line UV detector. Many contaminants of interest, however, do not absorb in the UV and cannot be monitored using our previous approach. In this investigation, FTIR spectroscopy was evaluated as an alternate detector for artificial aging experiments. Compared to single-wavelength UV detection, FTIR spectroscopy has the potential advantages of 1) providing nearly universal detection of organics and 2) the ability to monitor multiple contaminants simultaneously.

LOADING APPARATUS

Artificial aging experiments were conducted using a Dionex SFE-703 supercritical fluid extraction instrument that had been modified to circulate supercritical fluids in a closed

loop (Figure 1). Solvent selection (xenon or CO_2) was accomplished using a two-position switching valve. A 3.5-mL high-pressure vessel was used to dissolve contaminants in the supercritical solvent. Another 3.5-mL vessel was used to contain soil samples during soil-loading experiments. Supercritical solutions were circulated through the closed loop by an HPLC pump. Spectral measurements were acquired using a Bruker 66v vacuum-bench FTIR system equipped with a KBr beamsplitter and dual mercury-cadmium-telluride and deuterated triglycine sulfate detectors. The FTIR spectrometer was interfaced to the loading system using a high-pressure flow cell with a 1 mm pathlength.

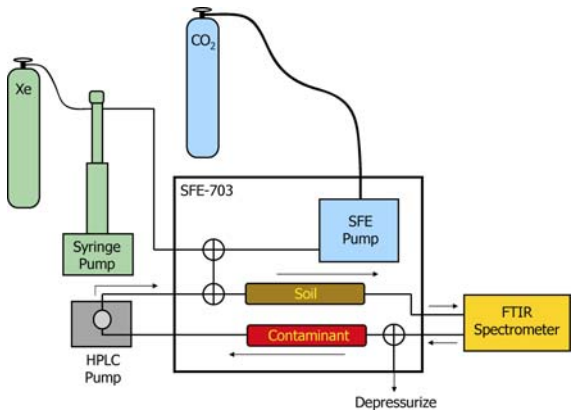

Figure 1. Loading apparatus.

CHOICE OF SOLVENT

A potential problem with the use of FTIR spectroscopy for quantitation of organics in SC-CO_2 is that significant portions of the spectrum are unusable due to absorption by CO_2. French and Novotny have advocated the use of supercritical xenon in supercritical fluid chromatography to avoid this interference problem[2]. Although Xe is relatively expensive, it has convenient critical parameters (T_c = 289.8 K, P_c = 58.0 atm), is optically transparent in the infrared and is potentially a good solvent for large organic molecules. Therefore, we measured the infrared spectra of several halocarbons of interest in supercritical Xe and SC-CO_2 (Figure 2).

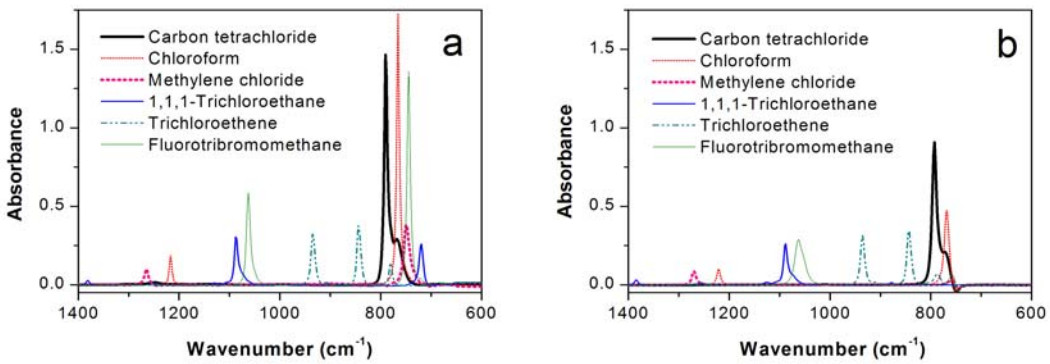

Figure 2. FTIR absorbance spectra of selected halocarbons in (a) supercritical Xe and (b) SC-CO_2. Temperature and pressure were held constant at 35 °C and 200 atm.

The two sets of spectra are very similar, although the band intensities are slightly reduced in SC-CO_2 and some of the bands associated with C-X stretches are partially or fully masked by CO_2 absorbance in the SC-CO_2 spectra. Nonetheless, the unique spectral fingerprints of the compounds investigated demonstrate that multiple compounds (*e.g.*, a contaminant and its degradation products) can be monitored simultaneously using FTIR spectroscopy. Moreover, the spectra indicate that the use of supercritical xenon as a solvent is unnecessary for monitoring the compounds in this study. This is advantageous because CO_2 is cheaper and more widely available than xenon.

QUANTITATION OF CCl_4 IN SC-CO_2

Varying amounts of CCl_4, a volatile contaminant of concern at the Hanford site, were mixed with SC-CO_2 (200 atm, 35 °C) and the spectra of the resulting solutions were measured (Figure 3a). The apparent wavenumber shift in the spectra with increasing concentration was determined to be a saturation artifact associated with the infrared detector. Single-wavelength calibration on the shoulder of the primary absorbance band (793 cm^{-1}) produced excellent results over a broad concentration range (Figure 3b). Based on the variability of the SC-CO_2 baseline, we determined the detection limit to be approximately 2 m*M*. If desired, lower concentrations could be measured using a wavelength near the center of the absorbance band.

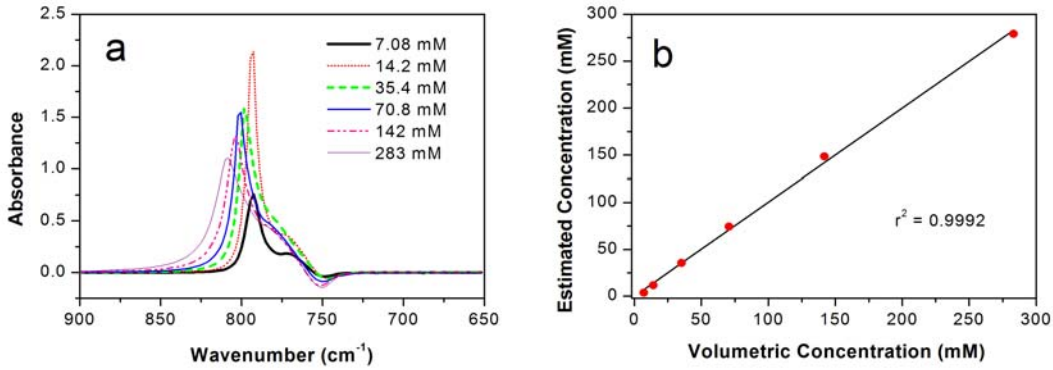

Figure 3. Quantitation of CCl_4 in SC-CO_2: (a) FTIR spectra of CCl_4 solutions (b) single-wavelength calibration results (814 cm^{-1}).

Application to Artificial Aging of Soils

Infrared detection was used to monitor the artificial aging of two soils (Hanford and Iron River) with CCl_4. In each experiment, a SC-CO_2 solution containing CCl_4 was circulated for 4 hours through a soil column. Periodically, infrared spectra of the supercritical fluid were measured and decreases in concentration were attributed to incorporation of the CCl_4 into the soil (Figure 4). Estimates of soil concentrations from the infrared spectra were approximately 2 to 4 times higher than the concentrations determined from off-line gas chromatograph (GC) analyses of soil extracts. We believe the discrepancies were caused by partial removal of CCl_4 from the soil during depressurization of the loading apparatus and sample instability (*i.e.*, volatilization of the CCl_4) prior to the GC analysis.

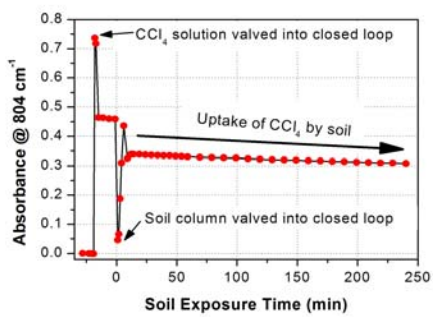

Figure 4. Loading of Iron River soil (4.5% organic carbon) with CCl_4

CONCLUSIONS

- Relative to UV detection, FTIR spectroscopy greatly expands the range of contaminants that can be quantified in supercritical fluids.
- The unique FTIR spectra of the halocarbons in this study demonstrate that multiple compounds could be monitored in either CO_2 or xenon. CO_2 is preferred due to the high cost of xenon.

- CCl_4 is readily measured over broad concentration ranges in SC-CO_2 solutions.
- Despite changes in samples during depressurization, FTIR spectroscopy is a powerful tool for monitoring artificial aging experiments. Future work may enable us to closely relate FTIR-based concentration estimates to final loaded concentrations.

ACKNOWLEDGEMENTS
This work was funded in part by the U.S. Department of Energy's Environmental Management Science Program (Project 86729: Mechanisms of CCl_4 Retention and Slow Release in Model Porous Solids and Sediments). The authors would like to thank Alex Mitroshkov for performing GC analyses of soil extracts.

References

1. Riley, R. G., Thompson, C. J., Huesemann, M. H., Wang, Z., Peyton, B., Fortman, T., Truex, M. J. and Parker, K. E. 2001. "Artificial Aging of Phenanthrene in Porous Silicas Using Supercritical Carbon Dioxide." *Environ. Sci. Technol.* **35** (18), 3707-3712.
2. French, S. B. and Novotny, M. 1986. "Xenon, a Unique Mobile Phase for Supercritical Fluid Chromatography." *Anal. Chem.* **58** (1), 164-166.