ACOUSTIC PROBE FOR SOLID-GAS-LIQUID SUSPENSIONS

A.S. Sangani, L.L. Tavlarides, P.D.M. Spelt, and M.A. Norato
Department of Chemical Engineering and
Materials Science
Syracuse University
Syracuse, New York
13244-1190

M.S. Greenwood
Battelle Pacific Northwest National Laboratory
Richland, Washington
99352

Funding provided by US Department of Energy,
Environmental Management Science Program
Grant # DE-FG07-96ER14729

Project Objectives

- Develop an understanding of mechanisms by which bubbles present in a solid-liquid slurry contribute to the overall attenuation behavior of the slurry.
- Develop a theory for predicting the acoustic response of a slurry given its microstructure (Forward Problem).
- Develop a theory for predicting the particle size distribution of a slurry given its acoustic response (Inverse Problem).
- Experimentation with relatively well defined solid-liquid, gas-liquid, and solid-gas-liquid systems to test and improve the theory.
- Demonstrate application of the probe to waste slurries, such as those found at the Hanford Site.

THEORY FOR FORWARD PROBLEM

Attenuation in dilute solid-liquid suspensions

$$v(f) = \int_{a_1}^{a_2} F(a, f)\phi(a)da$$

- v = attenuation
- $(a_1 - a_2)$ particle radius range
- f = frequency of sound waves
- $\phi(a)da$ = volume fraction of particles between radius a and $a + da$
- F is related to attenuation due to particles of radius a. Use theory due to Allegra and Hawley 1972; Spelt et al 1998 which accounts for attenuation due to viscous, thermal and scattering effects
- Comparison with the measured attenuation excellent (see slide 8)

Attenuation by polystyrene particles in water: Theory

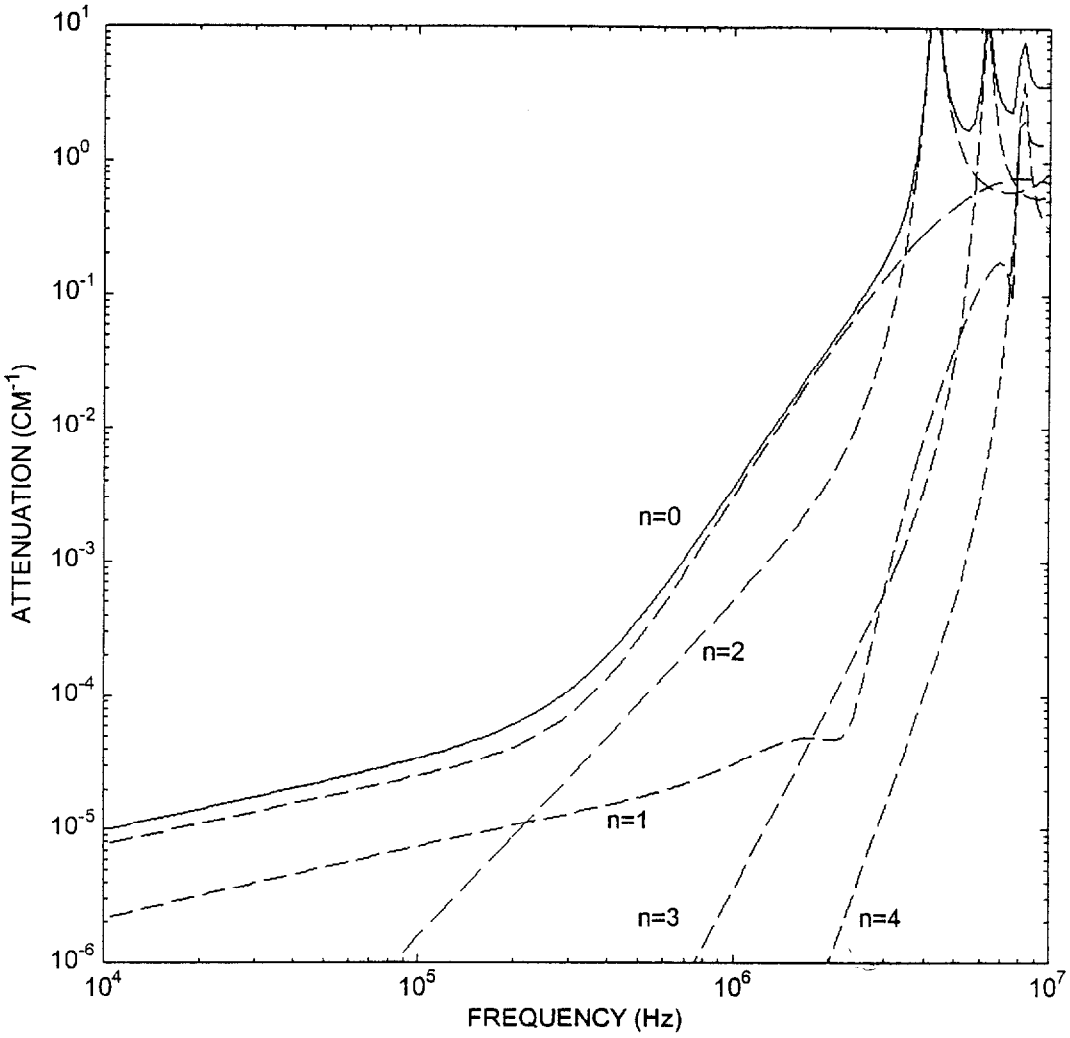

Contributions from the first five modes to the total attenuation as a function of frequency for monodispersed polystyrene particles (radius=79μm) in water.

$$\text{Attenuation} = -\sum (2n+1)\, \mathrm{Re}\, A_n \cdot \frac{3\phi}{2k^2a^3}$$

Attenuation by glass particles in water: Theory

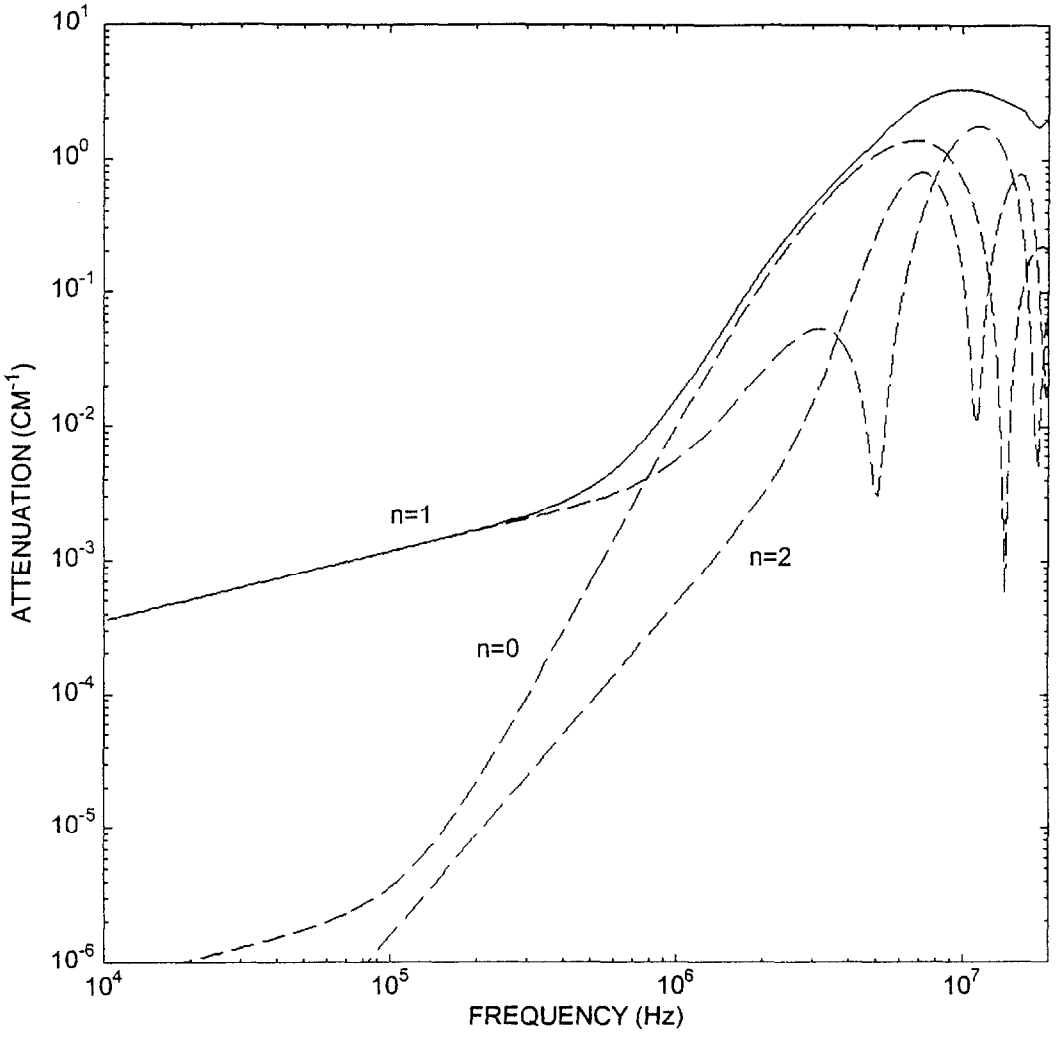

Contributions from the first three modes to the total attenuation as a function of frequency for monodispersed glass particles (radius = 79μm) in water.

EXPERIMENTS

- Solid-liquid suspensions
  - Polystyrene in water (79 $\pm$ 3 micron radius)
  - Glass particles in water (0.5-18 micron radius)
- Bubbly liquid
  - Electrolysis
  - Elecrospraying
  - Aquarium aerator stone (from a pet store)
- Solid-liquid-gas system
  - Glass particles (0.5-18 micron) plus aerator stone generated bubbles (size estimated at about 100 micron)

Experimental Setup --Toneburst Method

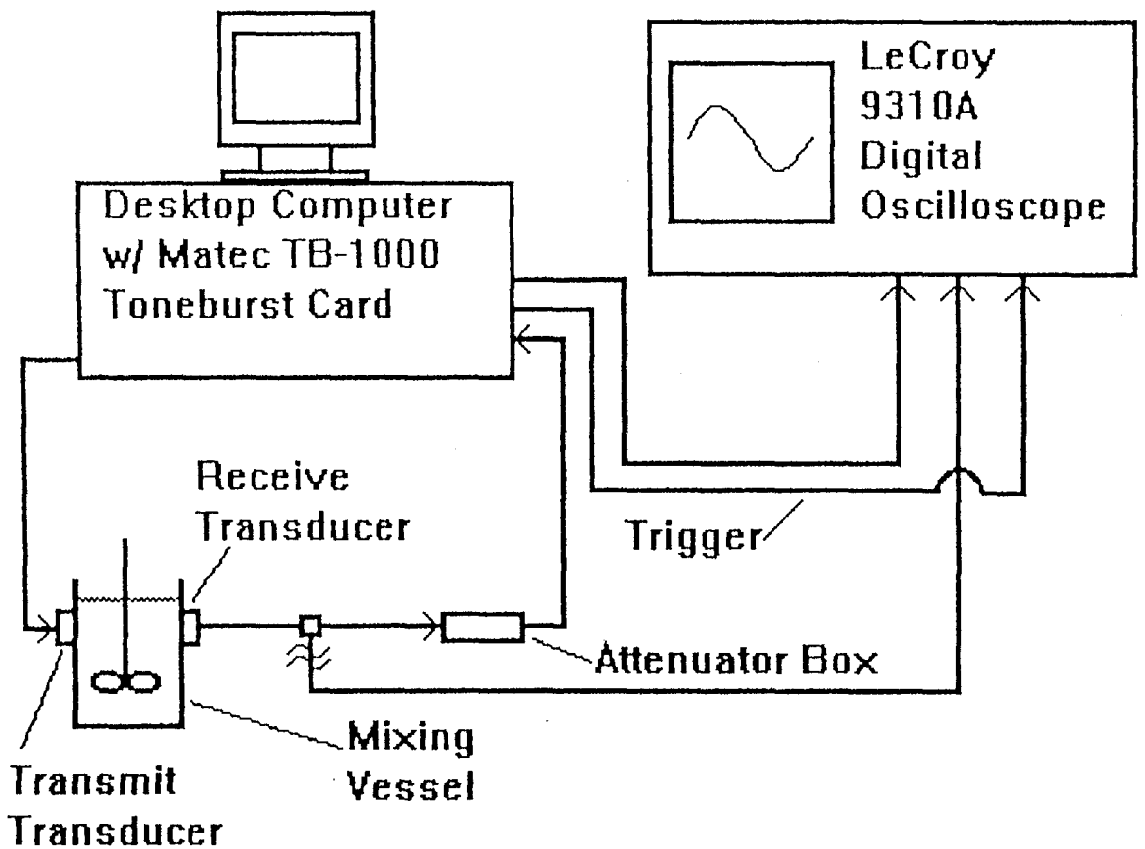

Experimental Setup -- FFT/Pulse Technique

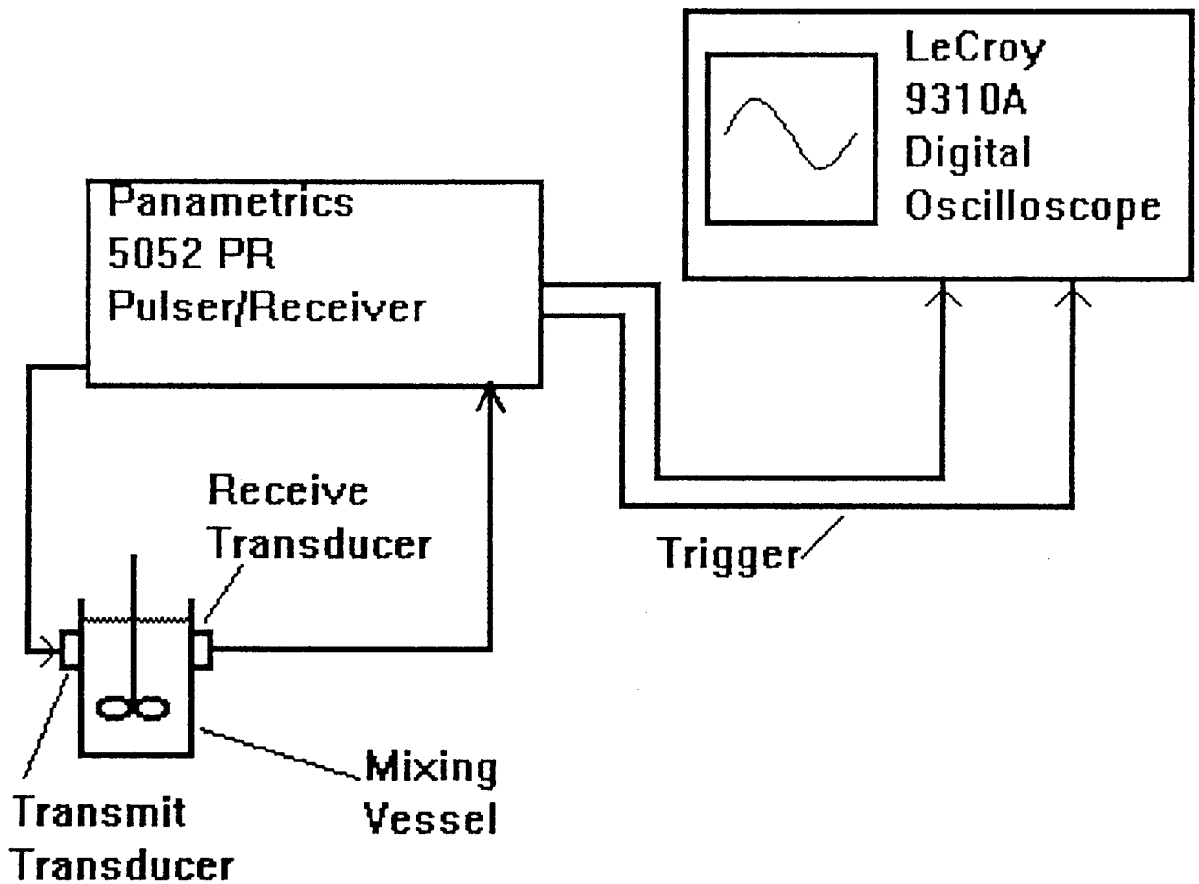

Attenuation by polystyrene particles in water: Experiments vs. Theory

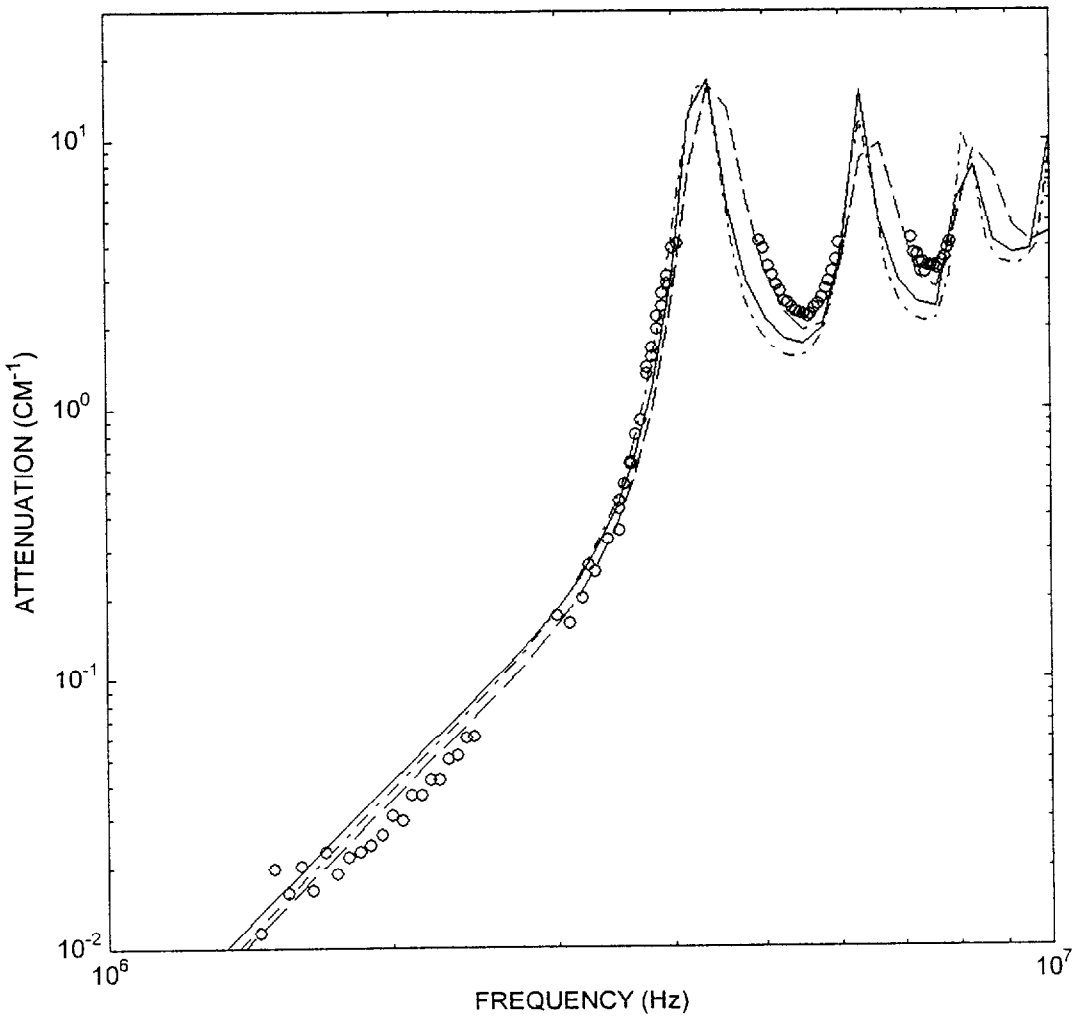

Attenuation as a function of frequency for almost monodispersed polystyrene particles of radius 79μm and 0.05 volume fraction in water. Circles are experimental data; -------, theory for monodispersed particles; -.-.-, theory for monodispersed particles with effective medium correction for finite volume fraction effects; - - -, theoretical result with a particle size distribution with a mean particle radius of 79μm and standard deviation of 2.5μm.

INVERSE PROBLEMS

- Given attenuation as a function of frequency for a dilute solid-liquid suspension determine size distribution
- Given attenuation as a function of frequency and particle size determine volume fraction of nearly monodisperse slurry
- Given attenuation as a function of frequency for solid-liquid suspension in presence of small amount of bubbles determine the particle volume fraction

INVERSE THEORY FOR DILUTE SLURRIES

$$\int_{a_1}^{a_2} F(f, a')\phi(a')da' = v(f)$$

Multiply by $F(f, a)df$ and integrate to obtain

$$\int_{a_1}^{a_2} K(a, a')\phi(a')da' = b(a)$$

$$\text{where } K(a, a') = \int_{f_{\min}}^{f_{\max}} F(a, f)F(a', f)df$$

$$b(a) = \int_{f_{\min}}^{f_{\max}} v(f)F(f, a)df$$

— Ill-posed integral equation: small changes in $b(a)$ may give rise to large fluctuations in $\phi(a)$. Smooth $\phi(a)$ obtained by

- Regularizing the above integral equation by a Tikhonov method
- Formulating as a linear programming problem with $\phi(a) \geq 0$ as a constraint

TIKHONOV REGULARIZATION

Modify the integral equation to

$$\epsilon(\phi(a) - \phi''(a)) + \int_{a_1}^{a_2} K(a, a')\phi(a')da' = b(a) \tag{1}$$

where ϵ is a small number to be determined by requiring that the error E between the computed attenuation and measured attenuation is the least

$$E = \int_{f_{\min}}^{f_{\max}} \left| \int_{a_1}^{a_2} F(f, a)\phi(a)da - v(f) \right|^2 df$$

- Eq. (1) is a well-posed integro-differential equation whose solution minimizes fluctuations in $\phi(a)$
- Details in Spelt et al (1998) (available upon request)
- The solution of Eq. (1) together with $\phi'(a_1) = \phi'(a_2) = 0$ minimizes

$$E + \epsilon \int [\phi(a)^2 + (\phi'(a))^2] da$$

Inverse problem for polystyrene particles: Influence of frequency range (I)

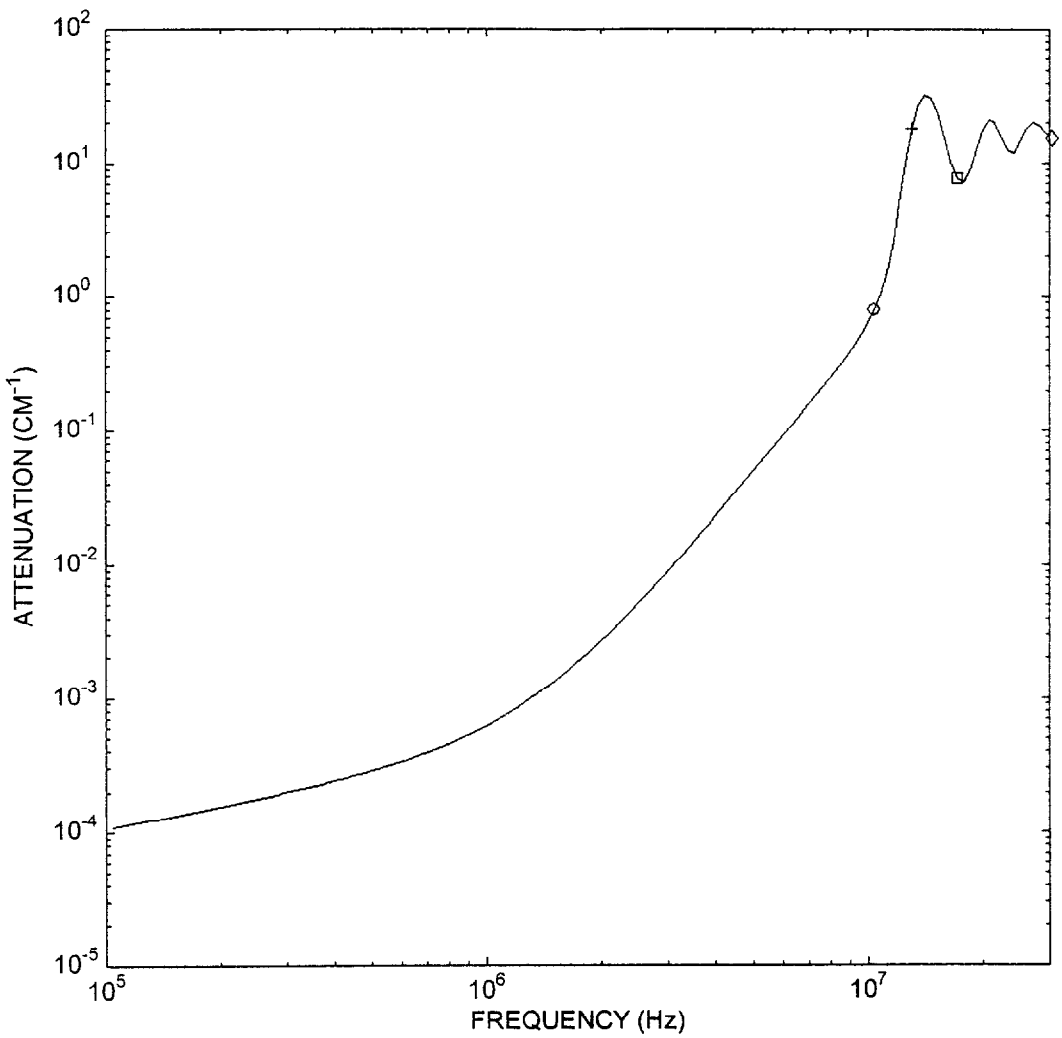

Input-attenuation data and four different upper bounds on the frequency range.

Inverse problem for polystyrene particles: Influence of frequency range (II)

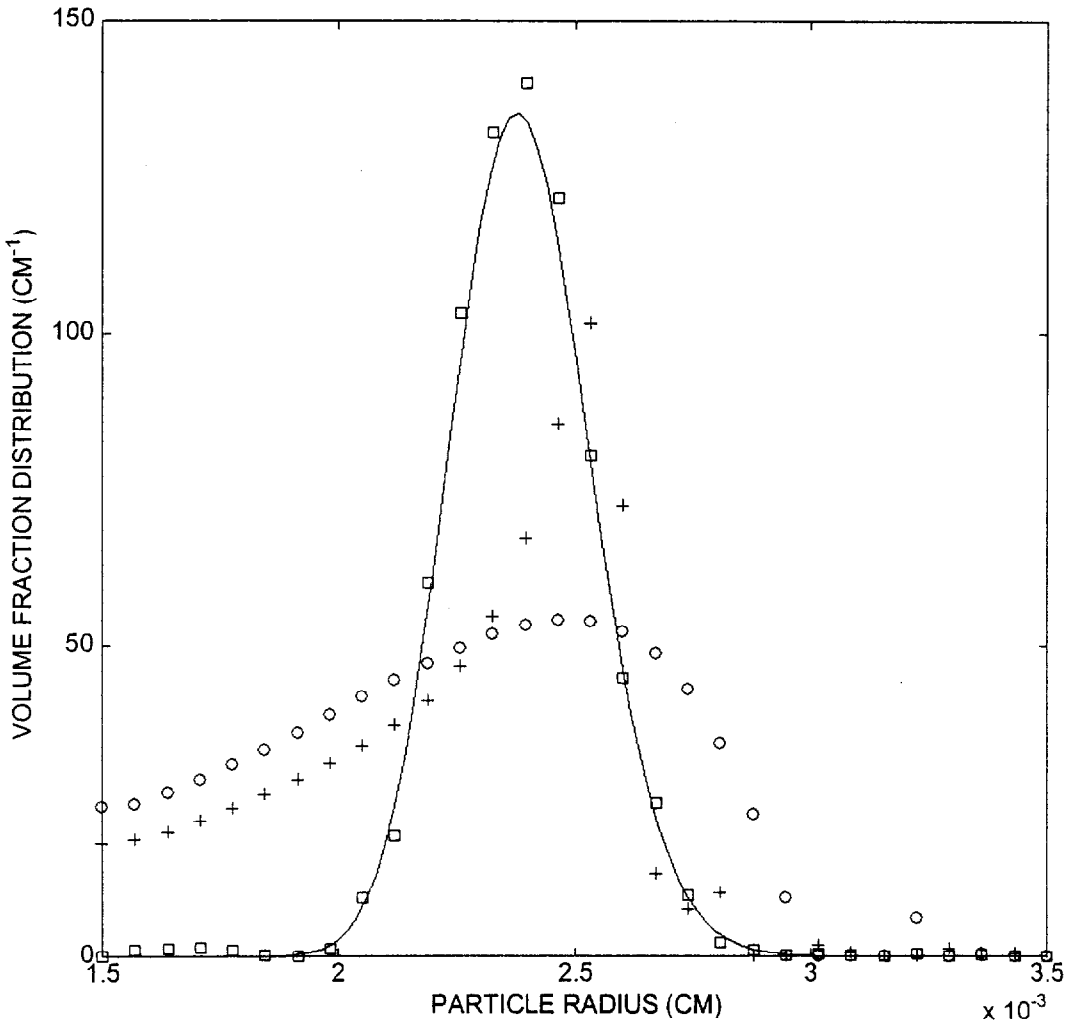

Results from the inverse problem from these different ranges, using the same marker type. The solid line is the exact result; □, result when cutting off the frequency range just at the end of the first peak in the attenuation; +, result when cutting of the frequency range after the second change in slope of the attenuation; O, result when cutting off before the second change in slope.

Inverse problem results for glass particles

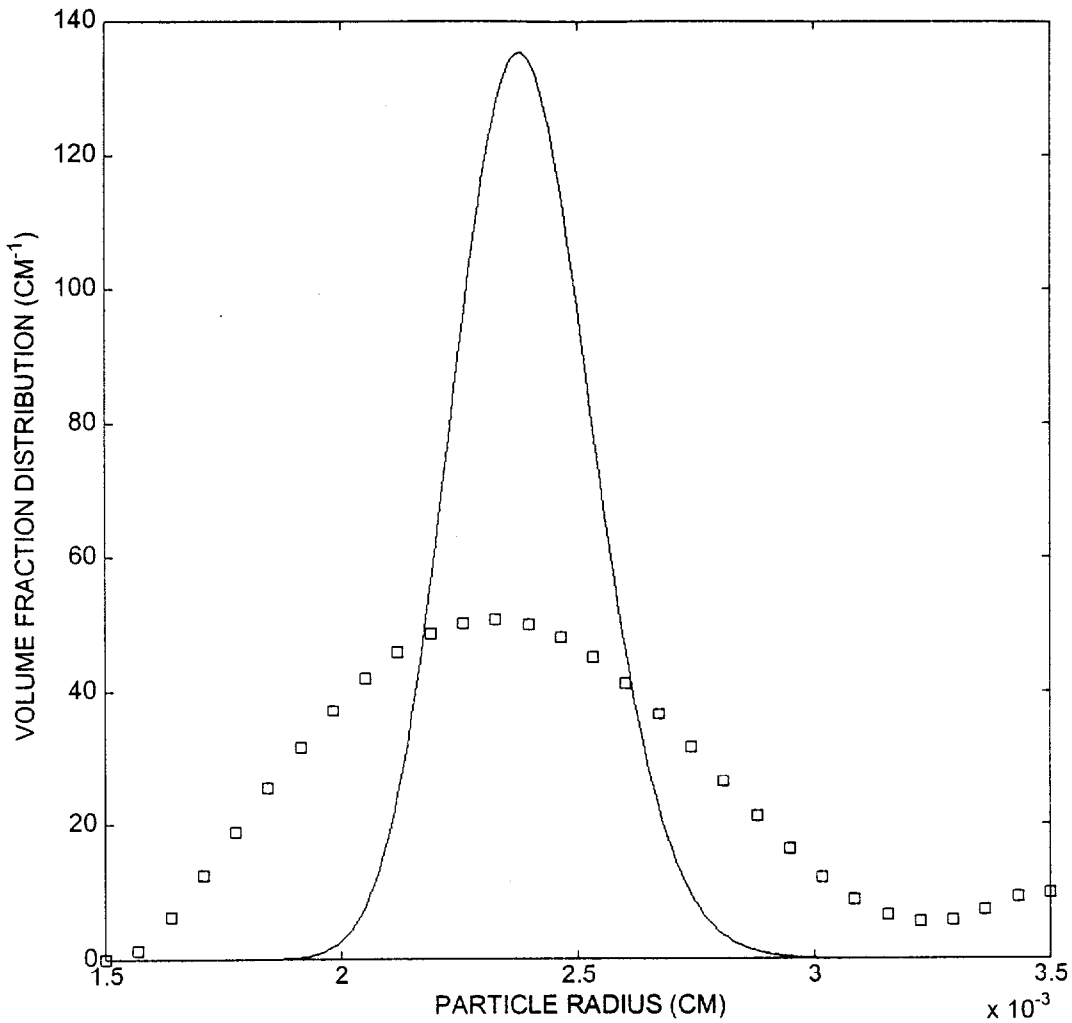

Volume fraction distribution (solid line) and the inverse problem result for glass particles (□). This result is worse than that for polystyrene particles because of the difference in resonance behavior.

Theory for concentrated slurries (Norato et al, in preparation)

- Ensemble-averaged equations
- Effective-medium approximation
- Allows for particle size distribution effect, attenuation due to viscous, thermal, and scattering effects
- Comparison with available experimental data is very good (see slide 16)

Dense slurries: Theory vs. Experiments

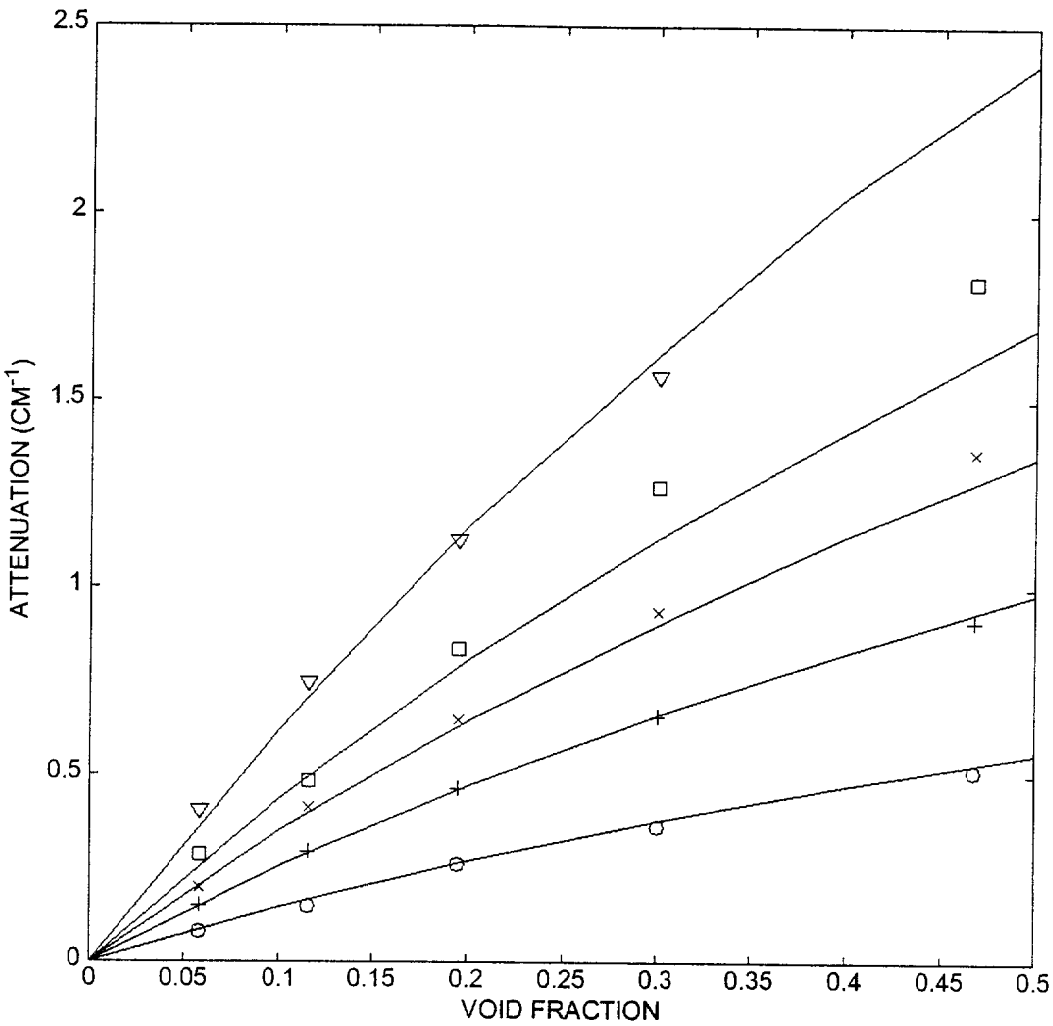

Attenuation measurements (symbols) by Allegra & Hawley (JASA 1972) as a function of volume fraction for small polystyrene particles (radius = 0.11μm) compared with effective medium results (solid lines) at several frequencies. From bottom to top the frequencies are 9, 15, 21, 27 and 39 MHz.

Attenuation in bubbly liquids

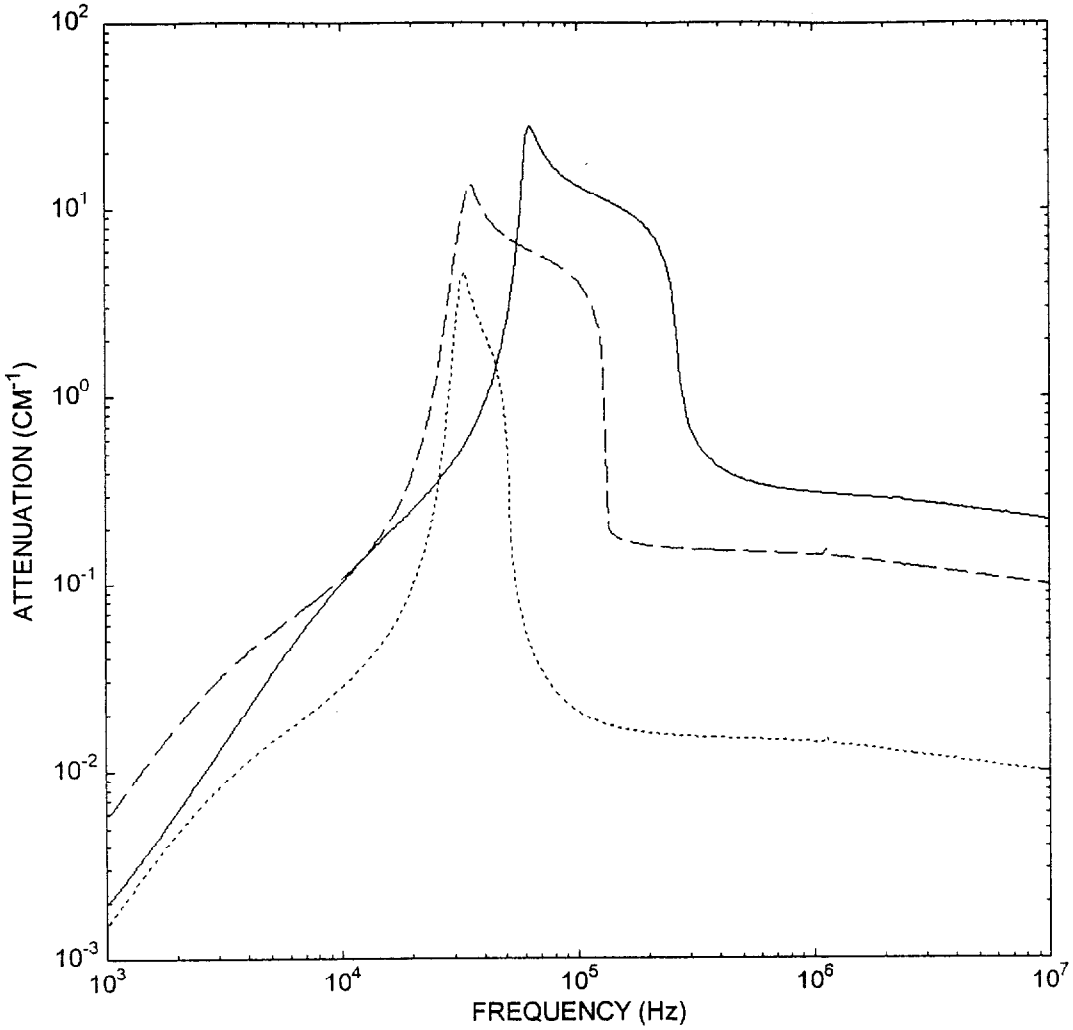

Attenuation as a function of frequency for monodispersed bubbles at different bubble radii and void fractions; ------, radius = 50μm, void fraction = 10^{-3}; - - - -, radius = 100μm, void fraction = 10^{-3}; ....., radius = 100μm, void fraction = 10^{-4}.

Attenuation in 3-phase slurries: Experiments vs. Theory

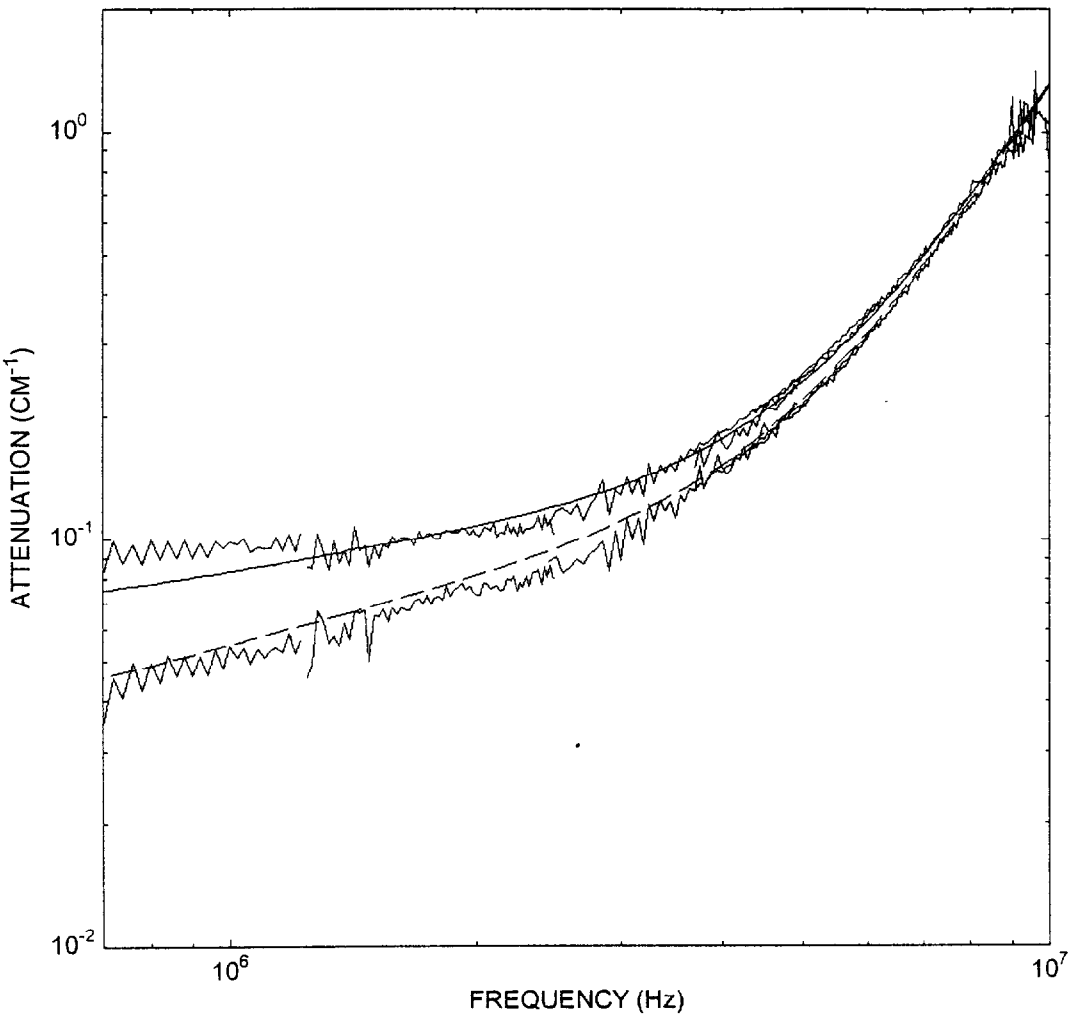

Attenuation data for a mixture of glass particles (mean radius = 10μm) and gas bubbles in water as a function of frequency. Wiggled lines are experimental data, other lines theory. The two lower curves are for the mixture without the bubbles.

Conclusions

- Experiments and forward theory for polystyrene in water are in excellent agreement.
- Regularization of the ill-posed inverse problem yielded successful results for dilute solid-liquid slurries; but results are very sensitive to the choice of frequency range, physical properties of the particles, and nature of the particle size distribution.
- Forward Theory results for solid-gas-liquid slurry match well with experimentally obtained solid-gas-liquid attenuation data.

Publications from Project Research

- "Determination of Particle Size Distributions from Acoustic Wave Propagation Measurements", P.D.M. Spelt, M.A. Norato, A.S. Sangani, and L.L. Tavlarides, submitted to *Physics of Fluids*.

- "Attenuation of Sound Waves in Dense Slurries: Experiments and Theory", M.A. Norato, P.D.M. Spelt, M.S. Greenwood, A.S. Sangani, and L.L. Tavlarides, in preparation.

Presentations from Project Research

- "Acoustic Probe for Solid-Gas-Liquid Suspensions", M.A. Norato , P.D.M. Spelt, A.S. Sangani, M.S. Greenwood, and L.L. Tavlarides, MIXING XVI Conference, Williamsburg, VA, June, 1997.

- "Acoustic Probe for Solid-Gas-Liquid Suspensions", M.A. Norato, P.D.M. Spelt, A.S. Sangani, M.S. Greenwood, and L.L. Tavlarides, 1997 AIChE Annual Meeting, Los Angeles, CA, November, 1997.