LA-UR--82-2622

DE83 000332

PARITY NONCONSERVATION IN PROTON-WATER SCATTERING AT 800 MeV

D. E. Nagle, J. D. Bowman, R. Carlini, R. E. Mischke
Los Alamos National Laboratory, Los Alamos, NM 87545

H. Frauenfelder, R. W. Harper, V. Yuan
University of Illinois, Urbana, IL 61801

A. B. McDonald
Princeton University, Princeton,

and

R. Talaga
University of Maryland, College Park, MD 20742

ABSTRACT

A search has been made for parity nonconservation in the scattering of 800 MeV polarized protons from an unpolarized water target. The result is for the longitudinal asymmetry, $A_L = +(6.6 \pm 3.2) \times 10^{-7}$. Control runs with Pb, using a thickness which gave equivalent beam broadening from Coulomb multiple scattering, but a factor of ten less nuclear interactions than the water target, gave $A_L = -(0.5 \pm 6.0) \times 10^{-7}$.

DISCLAIMER

DISTRIBUTION OF THIS DOCUMENT IS UNLIMITED

LA-UR -82-2622

Conf-820911--2

Los Alamos National Laboratory is operated by the University of California for the United States Department of Energy under contract W-7405-ENG-36

MASTER

TITLE: PARITY NONCONSERVATION IN PROTON-WATER SCATTERING AT 800 MeV

AUTHOR(S): D. E. Nagle, J. D. Bowman, R. Carlini, R. E. Mischke, H. Frauenfelder, R. W. Harper, V. Yuan, A. B. McDonald, and R. Talaga

SUBMITTED TO: 5th International Symposium on High Energy Spin Physics
Brookhaven National Laboratory
16-22 September 1982

DISTRIBUTION OF THIS DOCUMENT IS UNLIMITED

By acceptance of this article, the publisher recognizes that the U S Government retains a nonexclusive, royalty-free license to publish or reproduce the published form of this contribution, or to allow others to do so, for U S Government purposes

The Los Alamos National Laboratory requests that the publisher identify this article as work performed under the auspices of the U S Department of Energy

Los Alamos National Laboratory
Los Alamos, New Mexico 87545

FORM NO 836 R4
ST NO 2629 5/81

PARITY NONCONSERVATION IN PROTON-WATER SCATTERING AT 800 MeV

D. E. Nagle, J. D. Bowman, R. Carlini, R. E. Mischke
Los Alamos National Laboratory, Los Alamos, NM 87545

H. Frauenfelder, R. W. Harper, V. Yuan
University of Illinois, Urbana, IL 61801

A. B. McDonald
Princeton University, Princeton, NJ 08540

and

R. Talaga
University of Maryland, College Park, MD 20742

ABSTRACT

A search has been made for parity nonconservation in the scattering of 800 MeV polarized protons from an unpolarized water target. The result is for the longitudinal asymmetry, $A_L = +(6.6 \pm 3.2) \times 10^{-7}$. Control runs with Pb, using a thickness which gave equivalent beam broadening from Coulomb multiple scattering, but a factor of ten less nuclear interactions than the water target, gave $A_L = -(0.5 \pm 6.0) \times 10^{-7}$.

DISCLAIMER

DISTRIBUTION OF THIS DOCUMENT IS UNLIMITED

An experiment has been carried out to search for parity nonconservation (PNC) in p-H_2O scattering at 800 MeV. Longitudinally polarized protons are scattered from an unpolarized water target and PNC is looked for as a small helicity dependence in the total cross section. The goal of the experiment is to study the contribution of the strangeness conserving weak force to nucleon-nucleon scattering. Although the scattering is dominated by strong and electromagnetic interactions, the weak interaction may be identified by the signature of PNC.

A longitudinal asymmetry can be defined as $A_L = (\sigma_+ - \sigma_-)/(\sigma_+ + \sigma_-)$ where $\sigma_+(\sigma_-)$ is the total cross section for positive (negative) helicity protons on a water target. Measurements of A_L have already been carried out at other energies on hydrogen. At 15 and 45 MeV, the experiments[1-3] yield $A_L = -(1.7 \pm 0.8) \times 10^{-7}$ and $A_L = -(3.2 \pm 1.1) \times 10^{-7}$ respectively, in good agreement with theoretical predictions.[4,5] However for 6 GeV/c protons on a water target a value of $A_L = (2.65 \pm 0.60) \times 10^{-6}$ has been reported.[6] This value is an order of magnitude larger than an existing theoretical prediction of $A_L \sim 10^{-7}$ (Ref. 7). However Mardulli, Scrimeri, and Soffer estimate values of $A_L \sim 2 \times 10^{-6}$ at 6 GeV/c, using parity violating nucleon wave functions.[8] We report a preliminary result at an intermediate energy (800 MeV).

The experiment utilizes the LAMPF polarized proton beam at an energy of 800 MeV. The beam is structured in "macropulses" of 500 μsec duration with a 120 Hz repetition rate. Beam intensity during the experiment was in the range of 1 to 5 nA. The longitudinally polarized protons were produced in a Lamb-shift ion source located at the injector.[9] The polarization was reversed in the source at a rate of 30 Hz. The reversing component of polarization was 85%.

The experimental layout is presented in Fig. 1. The two ion chambers determine the cross section by measuring the transmission of the polarized proton beam through the target. These ion chambers are designed to possess low noise characteristics[10] and they are the integrating types so as to handle the full polarized proton beam current. (See Fig. 2.) The target was 10 cm of H_2O, and had a transmission of 85%. The mean angle subtended

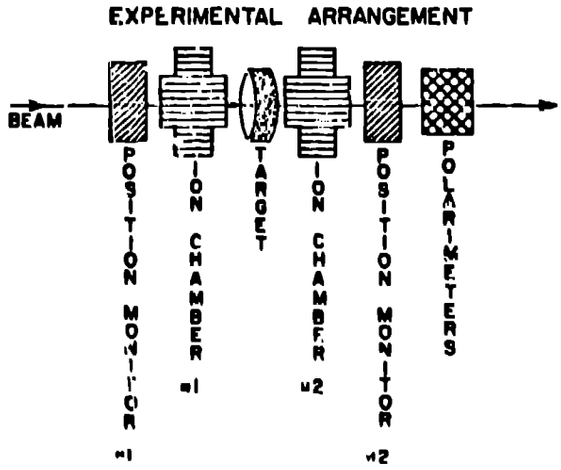

Fig. 1. Arrangement of the experiment.

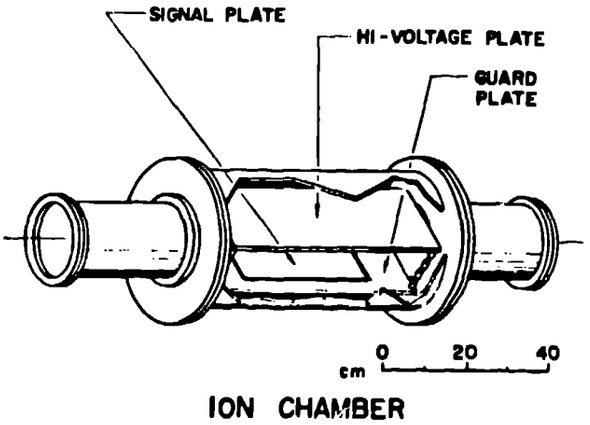

Fig. 2. Low noise ionization chambers. The special features which reduce the noise are: a) hydrogen filling for no spallation products and fast ion collection, b) collector plates which do not intercept beam and hence do not have spallation products. c) "snouts" which move the end windows far from the collector plates so that reaction products from the end windows do not produce noise.

at the downstream ion chamber by the target was 0.042 rad. By analyzing the signal for a component correlated with the 30 Hz polarization reversal, we can determine the magnitude of any helicity dependence in the total cross section.

Auxiliary detectors monitor 30 Hz changes in beam properties which may mimic a true parity violation signal. Two split-plate ion chambers monitor beam position, (HPOS and VPOS). A four-arm polarimeter monitors residual transverse polarization in both the horizontal and vertical planes, (HPOL and VPOL). The polarimeter is also used with an alternate target which can be scanned across the profile of the beam, in order to map the distribution of residual transverse polarization across that profile. From this we derive a first moment (circulating polarization)

$$CPOL = \int (HPOL \cdot y - VPOL \cdot x) \frac{\rho dx \cdot dy}{I}$$

Here $\rho dx \cdot dy$ is a beam current element and I the beam current. CPOL contributes a systematic error for which we make a correction. The upstream transmission detector doubles as a monitor of 30 Hz correlated beam intensity changes, (IMOD).

In the signal processing chain, low noise amplifiers are used to form the analog difference of the two transmission detector signals. The difference signal is then digitized and analyzed for 30 Hz variation by the computer. Other beam property signals are treated in a similar fashion. Careful attention is paid to signal path routes and component isolation so as to minimize ground loop contributions at 30 Hz. In addition, the 30 Hz reversal signal used in the data analysis is reconstructed digitally in the computer from a synchronous 15 Hz signal transmitted from the polarized source. In this way a 30 Hz polarization reversal signal as a direct source of electronic pickup is eliminated.

The major sources of systematic error for the experiment result from changes of beam properties synchronous with the polarization reversal. Such changes can produce a spurious helicity related transmission signal. To separate out the effects of these systematic errors, specific runs are taken in addition to the data runs. In these runs both position and intensity are systematically varied to determine the functional dependence

of transmission on changes in these beam properties. Similar runs are also taken with the polarization fully transverse. From these runs corrections arising from net residual transverse polarization and from circulating polarization can be calculated. Subsequently, during the measurement of the longitudinal asymmetry, the beam position, residual transverse polarization, and intensity for each macropulse are recorded. Corrections are made off-line for their contributions.

To further eliminate systematics not directly related to the helicity of the beam, data are taken in two configurations of the polarized source.[9] In the "normal" configuration (NN in Table I) protons exiting the spin filter region of the source are longitudinally polarized with spin forward.[9] They then traverse the spin flip region, where their spin is flipped by 180° if current is supplied to the spin flip coil. The helicity reversal signal received by the experiment is synchronized to the current in the spin flip coil. In the "reverse" configuration (RR in Table I) the polarization of the protons leaving the spin filter region is of the opposite helicity. Hence any true parity signal will appear, for the two configurations, as transmission asymmetries of equal magnitude but opposite sign. On the other hand, helicity in dependent systematics will appear as asymmetries equal in both magnitude and sign. We use the symbol (NN-RR)/2 to denote the difference of the variable as meassured in runs for the two configurations of the source. In Table I, we list for the systematics the polarization dependent pieces (NN-RR)/2. The largest contribution is from

TABLE I. Systematic corrections, longitudinal asymmetries, and controls.

Systematic Corrections (NN-RR)/2	
POS	$(0.9 \pm 1.1) \times 10^{-7}$
POT	$(1.8 \pm 0.5) \times 10^{-7}$
CPOL	$(1.6 \pm 0.7) \times 10^{-7}$
IMOD	$(3.6 \pm 0.6) \times 10^{-7}$

Longitudinal Asymmetries	Raw	Corrected
$A_L(NN)$	$(-2.1 \pm 4.2) \times 10^{-7}$	$(10.4 \pm 4.5) \times 10^{-7}$
$A_L(RR)$	$(0.5 \pm 3.9) \times 10^{-7}$	$(-1.8 \pm 4.2) \times 10^{-7}$
$A_L\frac{(NN+RR)}{2}$	$(0.8 \pm 2.9) \times 10^{-7}$	$(4.3 \pm 3.1) \times 10^{-7}$
$A_L\frac{(NN-RR)}{2}$	$(-1.3 \pm 2.9) \times 10^{-7}$	$(6.6 \pm 3.2) \times 10^{-7}$

Control Runs	
Pb	$-(0.5 \pm 6.0) \times 10^{-7}$
Target Out	$(7.5 \pm 5.5) \times 10^{-7}$

intensity modulation. It contributes to A_L at a level of 10^{-7}. From Table I the net corrected value of A_L is $(6.1 \pm 3.1) \times 10^{-7}$ including statistical and systematic errors.

Control experiments were made with no target and with a Pb target chosen to give the same multiple Coulomb scattering as the H_2O target. The Pb and no target results are scaled to the transmission of the H_2O target and given in Table I. Further analysis of this data is in progress. Although the central value differs from zero by only two standard deviations, taken at face value it is intermediate between the high energy and low energy results. We are planning to do a transmission experiment using liquid hydrogen as the target instead of H_2O.

Acknowledgment: We wish to acknowledge the participation of C. M. Hoffman in early phases of this experiment. This work was supported by U. S. Department of Energy.

REFERENCES

1. D. E. Nagle et al., AIP Conference Proceedings 51, (Argonne 1978) p. 224.
2. R. Balzer et al., Phys. Rev. Lett. 44, 699 (1980).
3. R. Henneck et al., AIP Conference Proceedings 69, 1439 (1980).
4. E. M. Henley, Ann. Rev. Nuclear Science 19, 367 (1969). M. Simonius Nucl. Phys. A220, 269 (1974).
5. B. Desplanques, J. F. Donoghue, and B. R. Holstein, Ann. Phys. 124, 449 (1980).
6. N. Lockyer et al., Phys. Rev. Lett. 45, 1821 (1980).
7. V. R. Brown, E. M. Henley, and F. R. Krejs, Phys. Rev. C9 935 (1974). Note that the asymmetry defined there is $2A_L$ as here defined.
8. G. Mardulli, E. Scrimeri, and J. Soffer, preprint CPT-82/p. 1420 Centre de Physique Théorique, CRNS. Marseille, France.
9. J. McKibben, AIP Conference Proceedings 69 Santa Fe 1980 p. 830, AIP New York 1980.
10. J. D. Bowman et al., Submitted to Nuclear Instruments and Methods.