LBL-34945

DOE – 2

SAMPLE RUN BOOK

Version 2.1E

F.C. Winkelmann, B.E. Birdsall, W.F. Buhl,
K.L. Ellington, A.E. Erdem
Energy and Environment Division
Lawrence Berkeley Laboratory
University of California
Berkeley, CA 94720
and
J.J. Hirsch and S. Gates
Hirsch and Associates
Camarillo, CA 93012

November 1993

(c) 1993. Regents of the University of California, Lawrence Berkeley Laboratory. This work was supported by the Assistant Secretary for Energy Efficiency and Renewable Energy, Office of Building Technologies, Building Systems and Materials Division of the U. S. Department of Energy, under Contract No. DE-AC03-76SF00098. Support for Version 2.1E was also provided by Southern California Edison Company, Pacific Gas and Electric Company, Gas Research Institute (via ElectroCom GARD, Ltd.), Electric Power Research Institute, Pacific Northwest Laboratory, and the IEA Solar Heating and Cooling Programme. Lawrence Berkeley Laboratory is an Equal Opportunity Employer.

810 pgs

TABLE OF CONTENTS

INTRODUCTION 4

OVERVIEW OF THE SAMPLE RUNS 5

INDEX OF SPECIAL FEATURES 9

CHICAGO WEATHER PLOTS 15

INPUT/OUTPUTS

1. Simple Structure 1. 1
   - Run 1 ..... 1. 4
   - Run 2 ..... 1. 9
   - Run 3 ..... 1. 16
   - Run 3a 1.119

2. 31-Story Office Building, LOAD1 ..... 2. 1
   - Run 1 Systems, Plant, Economics 2. 9
   - Run 2 Systems, Plant, Economics 2. 29
   - Run 3 Systems, Plant, Economics 2. 53

3. 31-Story Office Building, LOAD2 ..... 3. 1
   - Run 4 Systems, Plant, Economics □ 3. 13
   - Run 5 Systems, Plant, Economics □ 3. 39
   - Run 6 Systems, Plant, Economics 3. 62

4. Medical Building □ 4. 1

5. Office Building and Atrium Flower Shop 5. 1

6. Office Building and Atrium Deli/Restaurant □ 6. 1

7. Office Building and Open Atrium □ 7. 1

8. Bar/Lounge □ 8. 1
   - System 1 ..... 8. 5
   - System 2 ..... 8. 22
   - System 3 ..... 8. 42
   - System 4 ..... 8. 59
   - System 5 ..... 8. 80

□ New features added in DOE-2.1E

9. Single Family Residence □
System 1 ..... 9. 1
System 2 ..... 9. 32
System 3 ..... 9. 52

10. Daylighting Example 10. 1

11. Sunspace Example 11. 1

12. Parameterized Building □
Input before macro processing 12. 1
Include file for building location 12. 3
Include file for floor and space macros 12. 3
Input showing macro evaluation steps 12. 7
Input after macro processing 12. 23

13. Metric Input/Output Example □ 13. 1

 □ New features added in DOE-2.1E

INTRODUCTION

The DOE-2 *Sample Run Book* shows inputs and outputs for a variety of building and system types. The samples start with a simple structure and continue to a high-rise office building, a medical building, three small office buildings, a bar/lounge, a single-family residence, a small office building with daylighting, a single family residence with an attached sunspace, a "parameterized" building using input macros, and a metric input/output example. All of the samples use Chicago TRY weather, which is graphed on p.15.

The main purpose of the *Sample Run Book* is instructional. It shows the relationship of LOADS–SYSTEMS–PLANT–ECONOMICS inputs, displays various input styles, and illustrates many of the basic and advanced features of the program. Many of the sample runs are preceded by a sketch of the building showing its general appearance and the zoning used in the input. In some cases we also show a 3-D rendering of the building as produced by the program DrawBDL*. Descriptive material has been added as comments in the input itself.

We find that a number of users have loaded these samples onto their editing systems and use them as "templates" for creating new inputs. Another way of using them would be to store various portions as files that can be read into the input using the ## *include* command, which is part of the Input Macro feature introduced in version DOE-2.1D. Note that the energy rate structures here are the same as in the DOE-2.1D samples, but have been rewritten using the new DOE-2.1E commands and keywords for ECONOMICS.

The samples contained in this report are the same as those found on the DOE-2 release files. However, because of late changes made to the code after this document went to press, the output numbers that appear here may differ slightly from those obtained from the release files. The output on the release files can be used as a check set to compare results on your computer versus the results from the system on which the program was initially developed. To serve this purpose, all runs have numerous DOE-2 reports and one (Simple Structure, Run 3) contains all possible reports, minus duplications.

* DrawBDL is a graphics package running under Windows 3.1 that reads a DOE-2 input file and then draws the building in wire-frame or color shaded rendering. It is available from Huang and Associates, 6720 Potrero Avenue, El Cerrito, CA 94530. Phone 510-559-9067 or fax 510-236-9238.

OVERVIEW OF THE SAMPLE RUNS

1. Simple Structure (p.1.1)

This is a tutorial for the beginner. It takes a simple one-zone box (Run 1, *p.1.1*), develops it into a five-zone box with windows (Run 2, *p.1.2*), and, finally, expands it into a building with five zones plus return air plenum complete with an HVAC system and plant equipment, including a time-of-day electric rate (Run 3, *p.1.16*). An economics comparison is then made by increasing roof insulation compared to Run 3 input, assigning the costs of doing it, and making a life-cycle comparison study (Run 3A, *p.1.119*).

2. 31-Story Office Building — LOAD1 (p.2.1)

This is a conventional high-rise office building. The LOADS input is followed by three different sets of SYSTEMS, PLANT, and ECONOMICS inputs:

Run 1 Double duct/variable air volume HVAC system with night ventilation (p.2.9). Screw-type chiller and heating plant. Simple flat-rate electricity and gas costs.

Run 2 Variable air volume system with electric baseboards and morning warm-up cycle using gas (p.2.29). Cold water tank charged at night and released during on-peak utility rate periods. The chillers are centrifugal. Commercial time-of-day, inverted, electric rate structure which varies by season.

Run 3 Variable air volume system with baseboards reset by outside air temperature (p.2.53). Cooling plant with centrifugal chillers plus an absorption chiller for electric peak shaving. Heating is by steam utility. Commercial time-of-day electric rate structure which varies by season, and has a ratchet clause and a kWh/kW charge. Steam rate is flat with a minimum monthly charge.

3. 31-Story Office Building — LOAD2 (p.3.1)

This is a LOADS input of the same building as LOAD1. It demonstrates custom weighting factors, daylighting, and window management. The input uses abbreviations of keywords, return air plenums, and other features of interest to the experienced user. It is followed by three different SYSTEMS, PLANT, and ECONOMICS inputs:

Run 4 Four-pipe fan coil perimeter system and a variable temperature interior system that provides outside air for the entire building (p.3.13). This uses the moisture migration calculations added in 2.1E. Double-bundle heat recovery hot-water storage plant base-loaded in winter; conventional chillers in summer. Electric block energy charge, plus demand charge adjusted by a power factor correction. The gas utility charges at a different rate when the gas demand is greater than 70 therms/hr.

Run 5 Powered induction unit (PIU) system, with parallel PIU on east, south, and west exposures, and a series PIU on the north (p.3.39). Cogeneration plant with both absorption and centrifugal chillers. Diesel generators are controlled to respond to thermal loads or to run full-out during on-peak electric periods. Simple buy/sell electric rate structure and flat rate gas charge.

Run 6 Packaged heat pumps (under windows) for each perimeter bay and packaged heat pumps for each interior area (p.3.62). The interior units are supplemented by central hot water heating, whereas the perimeter units have electric resistance supplemental coils. Hot water generator plant for interior air systems plus a gas-engine-driven electric generator for peak shaving. Simple summer/winter energy charge plus a demand charge that also changes seasonally by cost and ratchet percentage.

4. Medical Building (p.4.1)
The LOADS input illustrates the use of overhangs, which automatically shade both direct and diffuse solar radiation. The HVAC system is a water loop heat pump system (HP) with water storage. The perimeter offices and core atrium spaces are connected to the same water loop so that heat from the core spaces can be recovered by the units serving the perimeter spaces. All ventilation air for the building is taken through the core units and is simulated as passing to the perimeter units. The water cooler that rejects heat to the atmosphere and the hot water generator are now simulated in SYSTEMS rather than PLANT. The domestic hot water is boosted by a service hot water heat pump, a new feature in DOE-2.1E. The electric rate structure is time-of-use with separate summer/winter minimum demand charges.

5. Office Building and Atrium Flower Shop (p.5.1)
The LOADS input is nearly the same as for the Medical Building except for changes to the atrium schedules to reflect merchandising activities. The primary purpose of the sample is to display user-defined Input Functions in SYSTEMS and a direct-fired absorption chiller in PLANT. The RHFS system in the atrium is controlled by a return air thermostat (using Input Functions) in lieu of an SZRH system controlled by the first-named zone. The Input Macro feature is illustrated by using the *##include* instruction to merge a previously prepared library file containing office schedules into the input stream. The electric rate structure is one typical of small commercial buildings: i.e., a flat base energy charge plus an inverted kWh/kW energy charge.

6. Office Building and Atrium Deli/Restaurant (p.6.1)
This sample uses the same LOADS input as the Office Building and Atrium Flower Shop except that the overhanging shading surfaces have been removed and sun control in the atrium is now provided by electrochromic glazing that switches from clear to colored whenever the atrium has a cooling load [new in 2.1E]. The atrium glazing is chosen from the new DOE-2.1E Window Library.

The sample also illustrates heat recovery from refrigerated casework and a gas-engine-driven chiller. The use of new air side economizer keywords is displayed. The electric

rate structure is the same as for Office Building and Atrium Flower Shop.

7. Office Building and Open Atrium. (p.7.1)
This sample is new for DOE-2.1E. It uses the same LOADS input as the Office Building and Atrium Flower Shop previously described, but the atrium serves only as a relaxation area with trees and flowers. The offices are served by a VAV system connected to an ice thermal energy storage (TES) system in PLANT [new in 2.1E]. The sizing of the TES system is done using DESIGN-DAY to represent a seven-day hot spell that spans a three-day July 4th weekend. The TES system is automatically sized to meet this worst case. It is a partial-storage/chiller-priority system using brine to represent Carrier Reactol fluid that freezes water encapsulated in plastic jugs. The atrium is served by a PSZ system with air/air heat pump. The heat pump defrost mode is on-demand, reverse-cycle [new in 2.1E].

8. Bar/Lounge (p.8.1)
The LOADS input is for a single space with use profiles typical of a small bar/lounge. There are five SYSTEMS inputs that run back to back to show various features of the program:

System 1 (p.8.5) shows a stand-alone desiccant cooling system (PTGSD).

System 2 (p.8.22) shows a liquid desiccant system as an add-on to a packaged a/c unit [new in 2.1E]. The desiccant unit treats only the minimum outside ventilation air.

System 3 (p.8.42) shows a stand-alone evaporative cooling unit (EVAP-COOL) with a gas-fired hydronic heater [new in 2.1E]. As in the other sample runs, Chicago weather is used, although this is not a particularly favorable climate for evaporative cooling.

System 4 (p.8.59) shows a packaged water-cooled air conditioner with a water side economizer [new in 2.1E]. It also shows the use of new keywords that allow independent adjustment of cooling and heating capacities [new in 2.1E].

System 5 (p.8.80) shows a variable volume and temperature air system (PVVT) coupled to a gas engine driven heat pump [new in 2.1E]. An evaporative precooled condenser is used [new in 2.1E].

9. Single Family Residence (p.9.1)
This is a small (1176 sq.ft.) slab-on-grade ranch-style house. It is divided into two zones – a living area and a sleeping area. The attic is not modeled as a separate zone; instead, the roof, air space, and insulated ceiling are treated as a single construction. All internal heat gains are lumped into a single schedule. Three different systems are modeled.

System 1 (RESYS, p.9.1) has a central on/off heat pump for heating and cooling. The thermostat is in the living area. Electric baseboards in the sleeping area supplement the heat pump.

System 2 (RESVVT, p.9.32) has a central variable-speed heat pump with thermosats in each zone controlling individual zone air dampers [new in 2.1E]. The thermostat set points take advantage of the occupancy patterns in the house. A heat exchanger downstream of the compressor allows part of the refrigerant superheat to be used for heating domestic hot water.

System 3 (RESYS, p.9.53) has a conventional central air conditioner and a gas furnace. The thermostat is in the living area.

10. Daylighting Example (p.10.1)

This is a LOADS-only tutorial for the input of daylighting control of electric lighting systems. An Input Function is used to model a non-linear dimming control system for the north-facing perimeter offices.

11. Sunspace Example (p.11.1)

This is a LOADS and SYSTEMS tutorial for a sunspace on a single family residence. Sunspace venting and fan-forced thermocirculation between sunspace and house are illustrated.

12. Parameterized Building (p.12.1)

This is a LOADS input example in which the geometry of a rectangular building is parameterized using Input Macros. The user-specified parameters include overall width and depth of the building, number of floors, floor height, and window-to-wall ratio. Each floor is assumed to have a core zone surrounded by four perimeter zones. Five listings are shown:

(1) (p.12.1) the original input showing the macro commands before they are evaluated;

(2) (p.12.3) the include file for building location;

(3) (p.12.3) the include file for the floor and space macros;

(4) (p.12.7) a listing that shows all of the intermediate steps of macro evaluation; and

(5) (p.12.23) the final input after all of the macro commands have been evaluated.

13. Metric Input/Output Example (p.13.1)

This is the Bar/Lounge System 4 example converted from English to metric input. The output is also in metric units.

Note: To hold down the physical size of this document, we have removed duplicate reports at the SPACE level in LOADS output, and at the ZONE level in the SYSTEMS output.

Special Features in the Sample Runs

This index is ordered according to the command that first initiates the given feature, paralleling the order of commands in the DOE-2 BDL Summary. The Sample Runs that demonstrate the feature are also referenced. Runs that show new features in DOE-2.1E are indicated by □.

LOADS Section

FEATURE	COMMAND(S)	SAMPLE RUN(S)
Parametric input	PARAMETER	Single Family Residence
Metric input and output	INPUT	Metric Input/Output Example
Design day	RUN-PERIOD and DESIGN-DAY	Simple Structure Run 3
□ Design day for thermal energy storage		Office - Open Atrium Office - Open Atrium
Sunspace	WALL-PARAMETERS, SPACE-CONDITIONS and WINDOW	Sunspace Example
Shading by trees by other buildings	BUILDING-SHADE	Single Family Residence Medical Building
Daylighting, with dimming controls	SPACE-CONDITIONS and WINDOW	Daylighting Example 31-Story Office LOAD2
Custom weighting factors	SPACE-CONDITIONS and INTERIOR-WALL	Daylighting Example Sunspace Example Single Family Residence 31-Story Office LOAD2
Overhangs and fins	DOOR WINDOW	Simple Structure Run 2 Medical Building

□ New features added in DOE-2.1E

LOADS Section (continued)

FEATURE	COMMAND(S)	SAMPLE RUN(S)
Hourly reports	HOURLY-REPORT	Single Family Residence Daylighting Example Sunspace Example
□ Sharing hourly report data among program modules	HOURLY-REPORT	Metric Input/Output Example
Verification reports	LOADS-REPORT, etc.	Simple Structure Run 3
Three-dimensional building geometry	SPACE	Simple Structure Runs 1-3 Sunspace Example
Reduced building geometry	SPACE	31-Story LOAD1 and LOAD2 Medical Building
Input Functions	FUNCTION	Daylighting Example Office - Flower Shop
Generalized Library using Input Macros	*##INCLUDE*	Office - Flower Shop Office - Deli/Restaurant
Input Macros	*##IF*, *##DEF*, etc.	Parameterized Building
□ Window Library	WINDOW	Office - Deli/Restaurant
□ Switchable glazing (electrochromics)	WINDOW	Office - Deli/Restaurant
□ Window frames	WINDOW	Single Family Residence
□ Window shade management	WINDOW	Daylighting Example

□ New features added in DOE-2.1E

SYSTEMS Section

FEATURE	COMMAND(S)	SAMPLE RUN(S)
Reset of baseboard of supply air	DAY-RESET-SCH RESET-SCHEDULE	31-Story Office - Run 3 31-Story Office - Run 2
Set minimum design air quantity	ZONE-AIR	31-Story Office - Run 2
Powered induction units	ZONE-FANS and SYSTEM	31-Story Office - Run 5
Baseboard heating	ZONE-CONTROL	31-Story Office - Run 2 31-Story Office - Run 3
Sunspace venting	ZONE-AIR	Sunspace Example
Sunspace control	ZONE	Sunspace Example
Refrigerated casework	ZONE and SYSTEM	Office - Deli/Restaurant
Scheduled control of minimum dampers	SYSTEM-AIR	31-Story Office - Run 2 Medical Building
Night ventilation	SYSTEM-AIR	31-Story Office - Run 1
Optimum start	SYSTEM-FANS	31-Story Office - Runs 1-6
VAV systems	SYSTEM-TERMINAL and SYSTEM	Simple Structure Run 3 Simple Structure Run 3A 31-Story Office - Run 2 31-Story Office - Run 3

□ New features added in DOE-2.1E

FEATURE	COMMAND(S)	SAMPLE RUN(S)
□ Water loop heat pumps with air side economizers (HP)	SYSTEM-FLUID	Medical Building
□ Variable-speed heat pump	SYSTEM	Single Family Residence System 2
Air-to-air heat pumps with condenser heat recovery (PSZ, PTAC)	SYSTEM-EQUIP and SYSTEM	31-Story Office - Run 6
Return air controller	FUNCTION	Office - Flower Shop
Desiccant cooling, stand alone unit (PTGSD)	SYSTEM	Bar/Lounge - System 1
□ Desiccant add-on unit to PSZ system	SYSTEM	Bar/Lounge - System 2
□ Evaporative cooling, stand alone unit (EVAP-COOL)	SYSTEM	Bar/Lounge - System 3
□ Packaged water cooled system with water side economizers (PSZ)	SYSTEM	Bar/Lounge - System 4
□ Enthalpy limit for packaged air conditioners	SYSTEM-CONTROL	Office Deli/Restaurant
□ Heat pump defrost type and defrost control	SYSTEM-CONTROL	Office Open Atrium
□ PVVT system with gas heat pump	SYSTEM	Bar/Lounge System 5
□ Residential multizone system (RESVVT)	SYSTEM	Single Family Residence System 2
□ Evaporatively precooled condenser on PVVT system	SYSTEM	Bar/Lounge System 5

□ New features added in DOE-2.1E

PLANT Section

FEATURE	COMMAND(S)	SAMPLE RUN(S)
Curve fit for screw compressor for gas-engine generator	CURVE-FIT	31-story Office - Run 1 31-story Office - Run 6
Scheduled operation of equipment	DAY-ASSIGN-SCH	31-Story Office - Run 2
Heat recovery from double-bundle chiller from diesel generator	 HEAT-RECOVERY HEAT-RECOVERY	 31-Story Office - Run 4 31-Story Office - Run 5
Changing compressor COP	PART-LOAD-RATIO	31-Story Office - Run 1
Variable-speed pumping	PLANT-PARAMETERS	31-Story Office - Run 1
Chilled water storage	ENERGY-STORAGE	31-Story Office - Run 2
□ Ice thermal energy storage	PLANT-PARAMETERS	Office - Open Atrium
Hot water storage	ENERGY-STORAGE	31-Story Office - Run 4
Peak shaving electric demand: using absorption chiller using engine/generator	 LOAD-MANAGEMENT LOAD-MANAGEMENT	 31-Story Office - Run 3 31-Story Office - Run 6
District steam system	ENERGY-RESOURCE	31-Story Office - Run 3
Gas engine chiller	PLANT-EQUIPMENT	Office - Deli/Restaurant
Direct-fired absorption chiller/heater	PLANT-EQUIPMENT	Office Flower Shop
□ Metering of two types of natural gas	ENERGY-RESOURCE and PLANT-EQUIPMENT	31-Story Office Run 5

□ New features added in DOE-2.1E

ECONOMICS Section

FEATURE	COMMAND(S)	SAMPLE RUN(S)
Gas/electric utility rates	UTILITY-RATE	All Runs
Seasonal rates, time-of-day rates, demand ratchets	BLOCK-CHARGE and RATCHET	31 Story Office Runs 2-6
Sell-back to utility	UTILITY-RATE	31 Story Office - Run 5
Life-cycle cost analysis	BASELINE	Simple Structure Run 3A

□ New features added in DOE-2.1E

Chicago Weather Plots

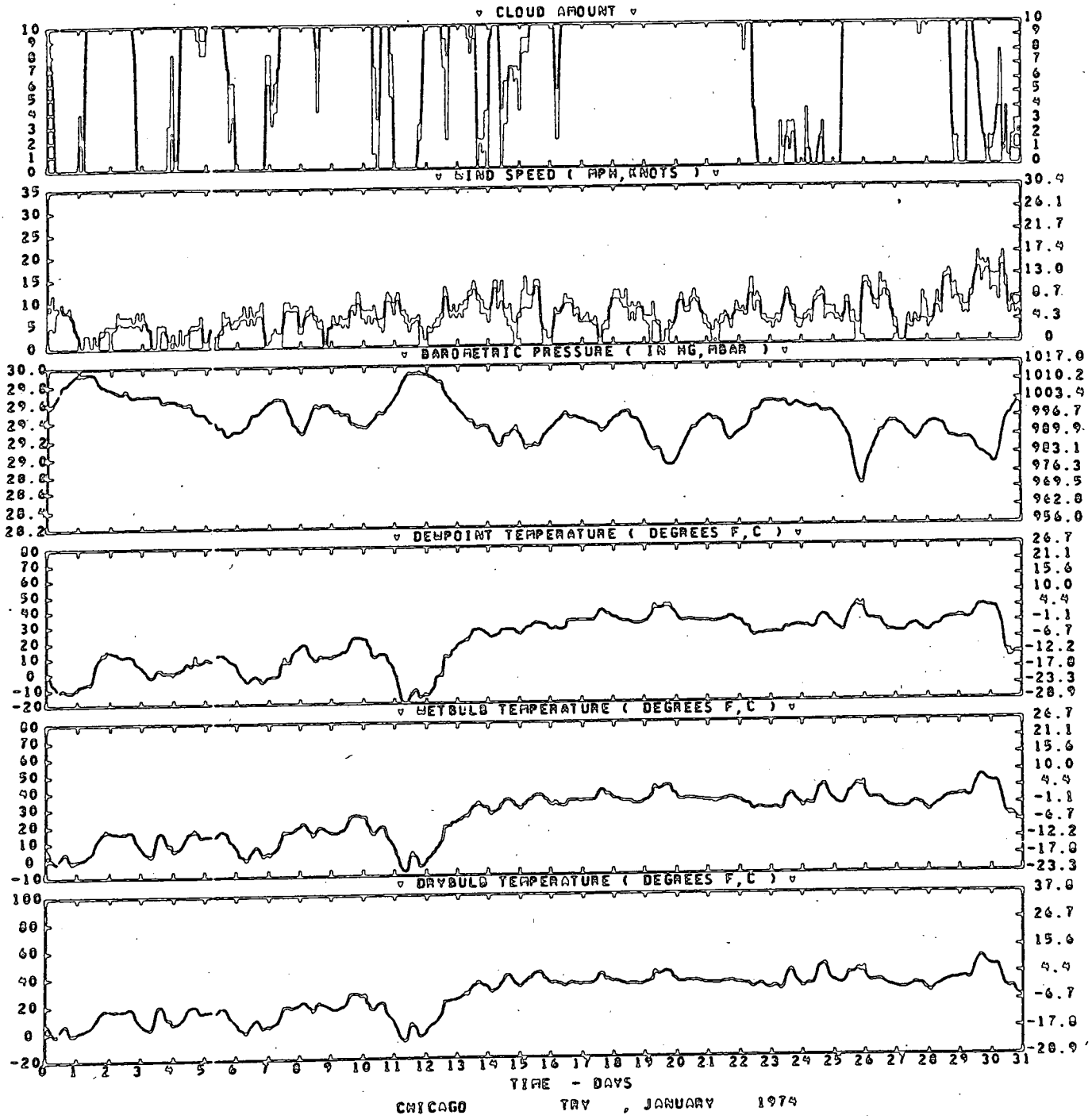

Chicago Weather Plots (continued)

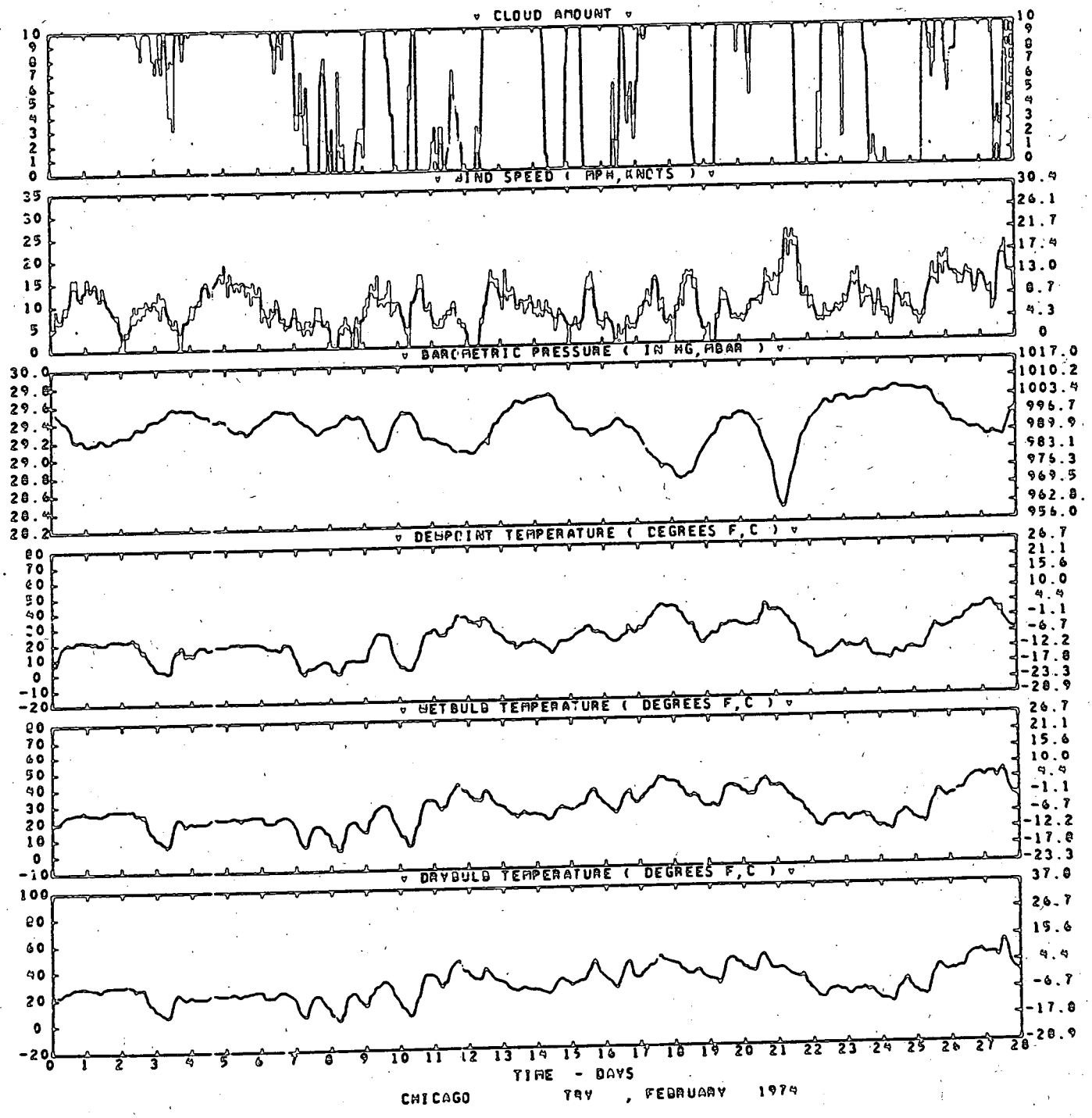

Chicago Weather Plots (continued)

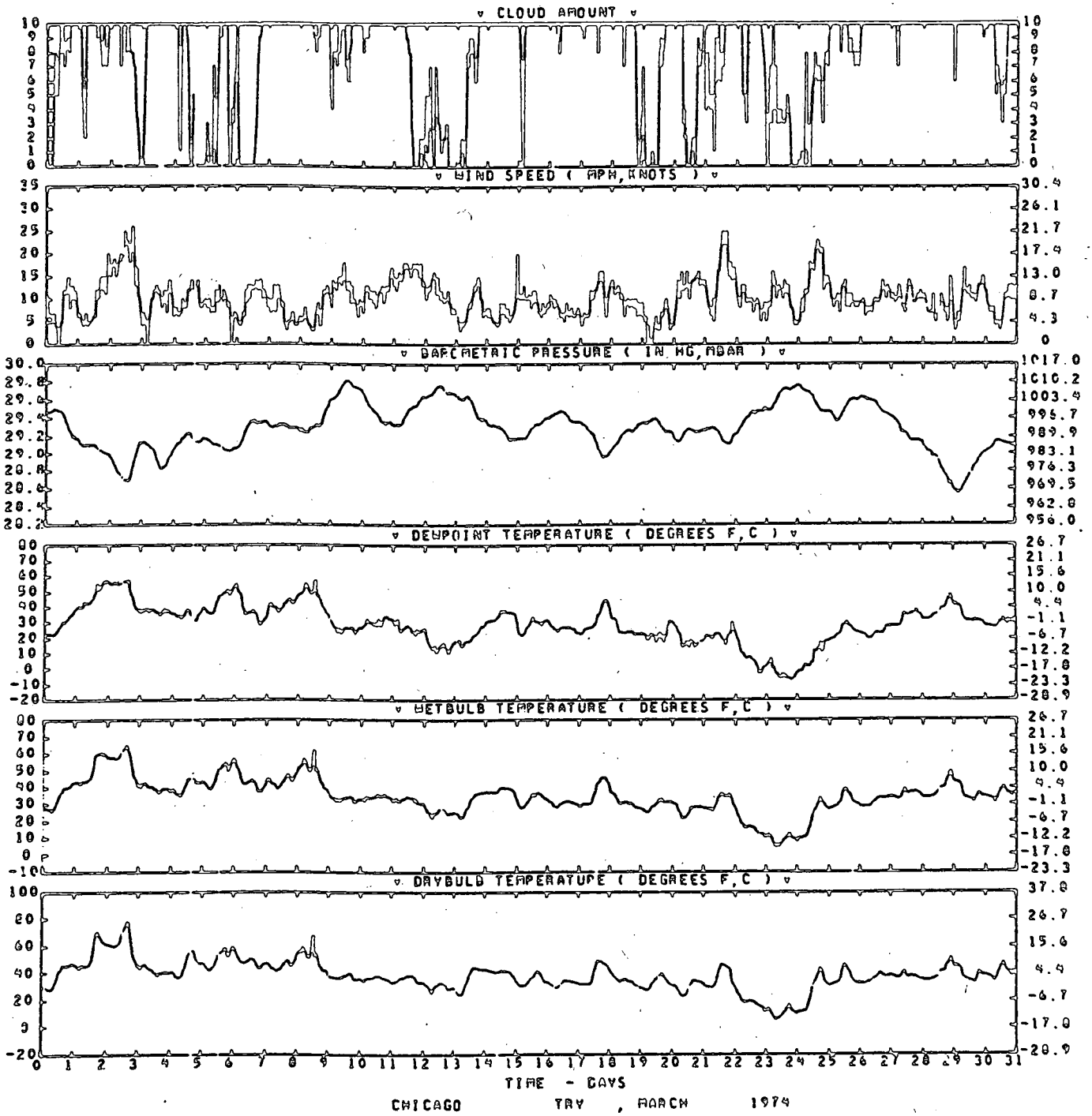

Chicago Weather Plots (continued)

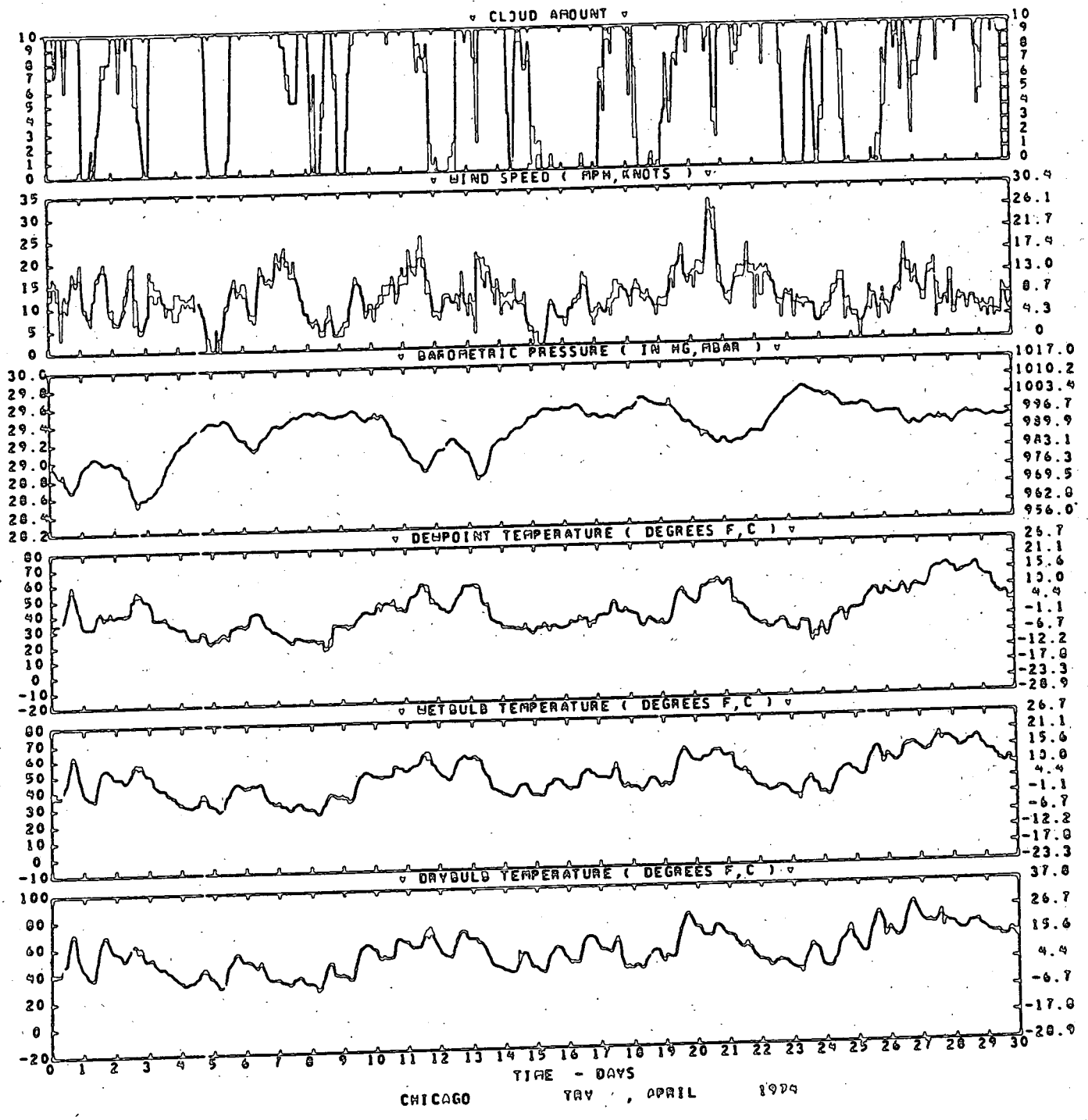

Chicago Weather Plots (continued)

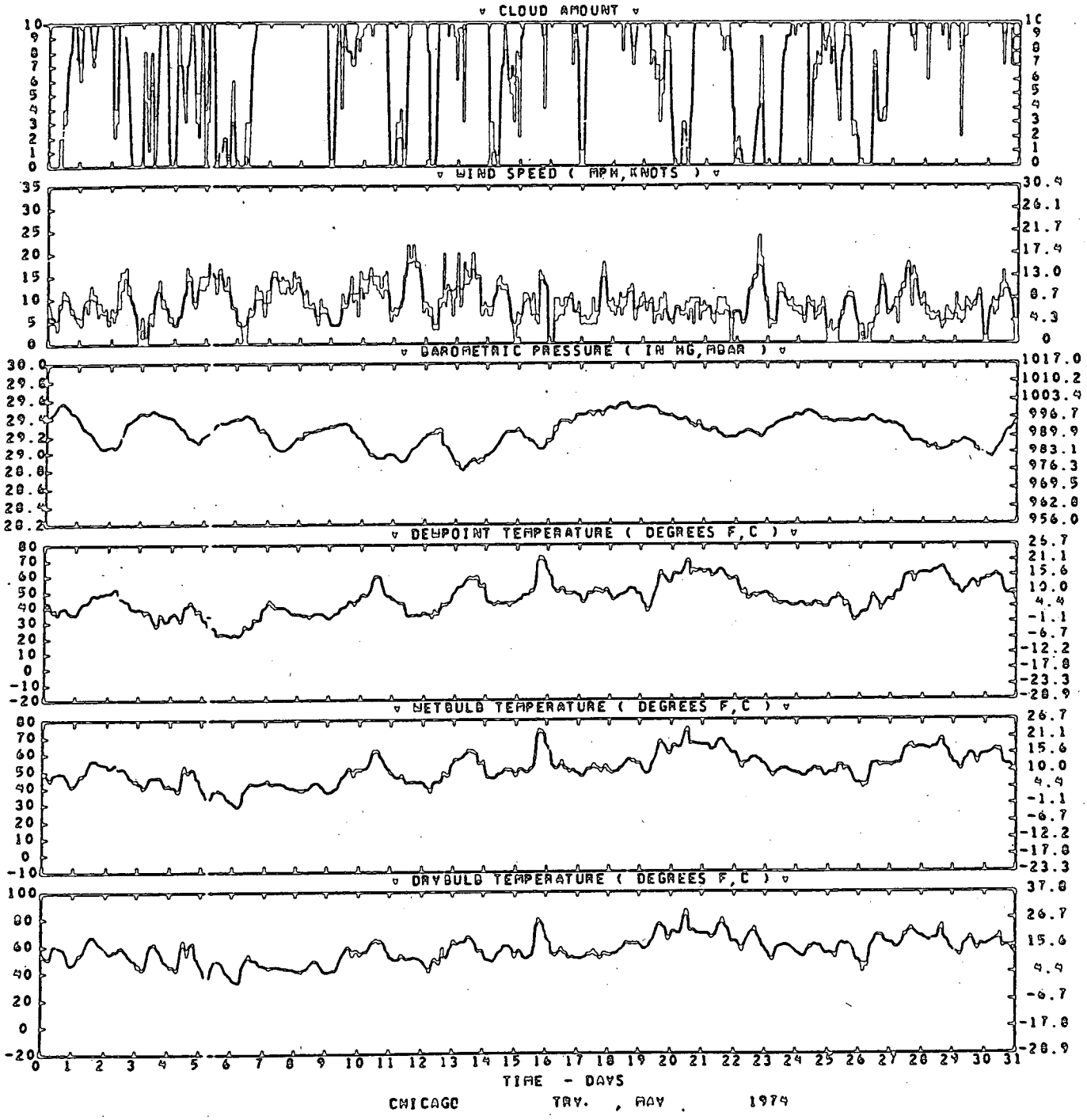

Chicago Weather Plots (continued)

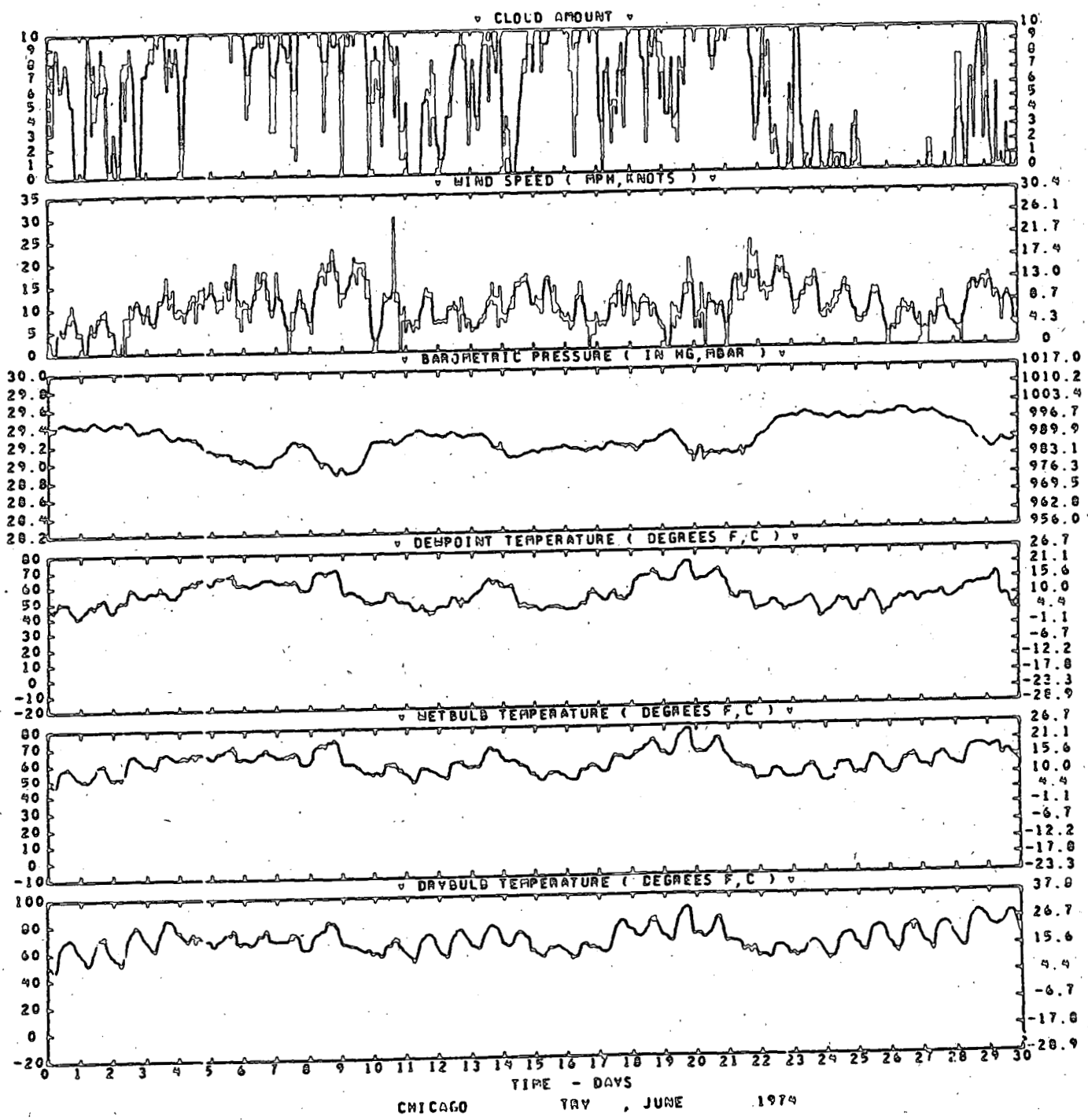

Chicago Weather Plots (continued)

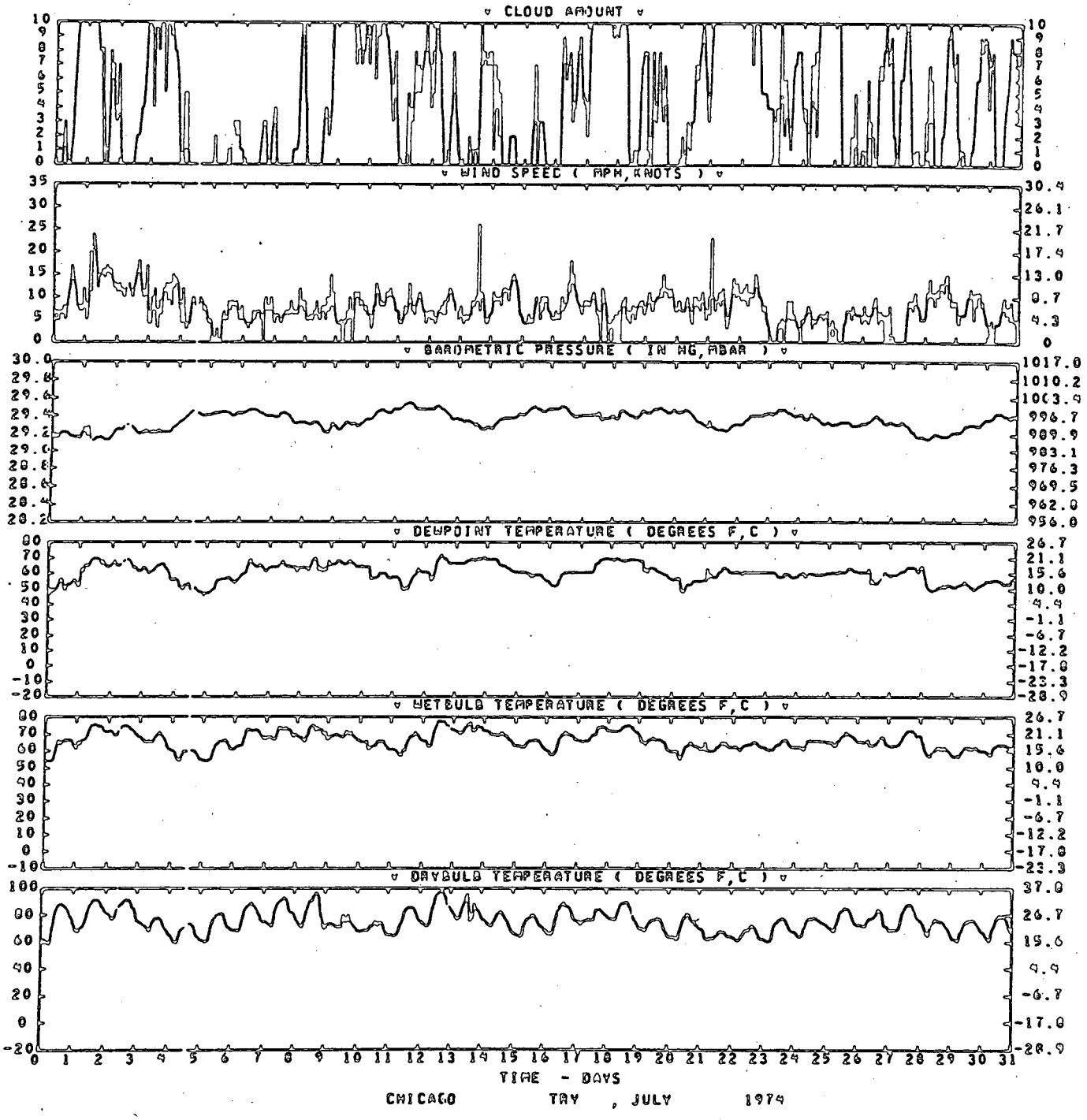

Chicago Weather Plots (continued)

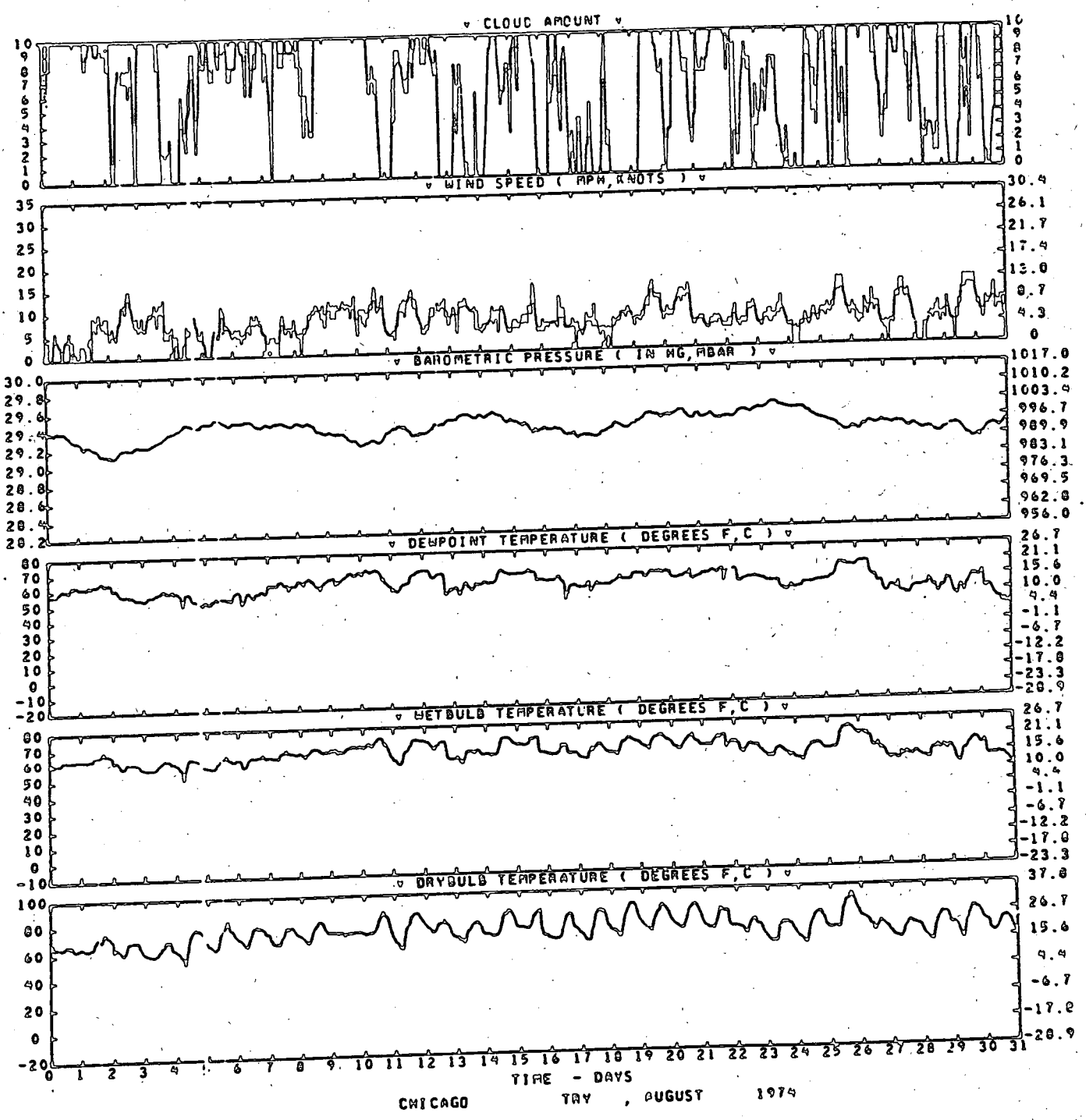

Chicago Weather Plots (continued)

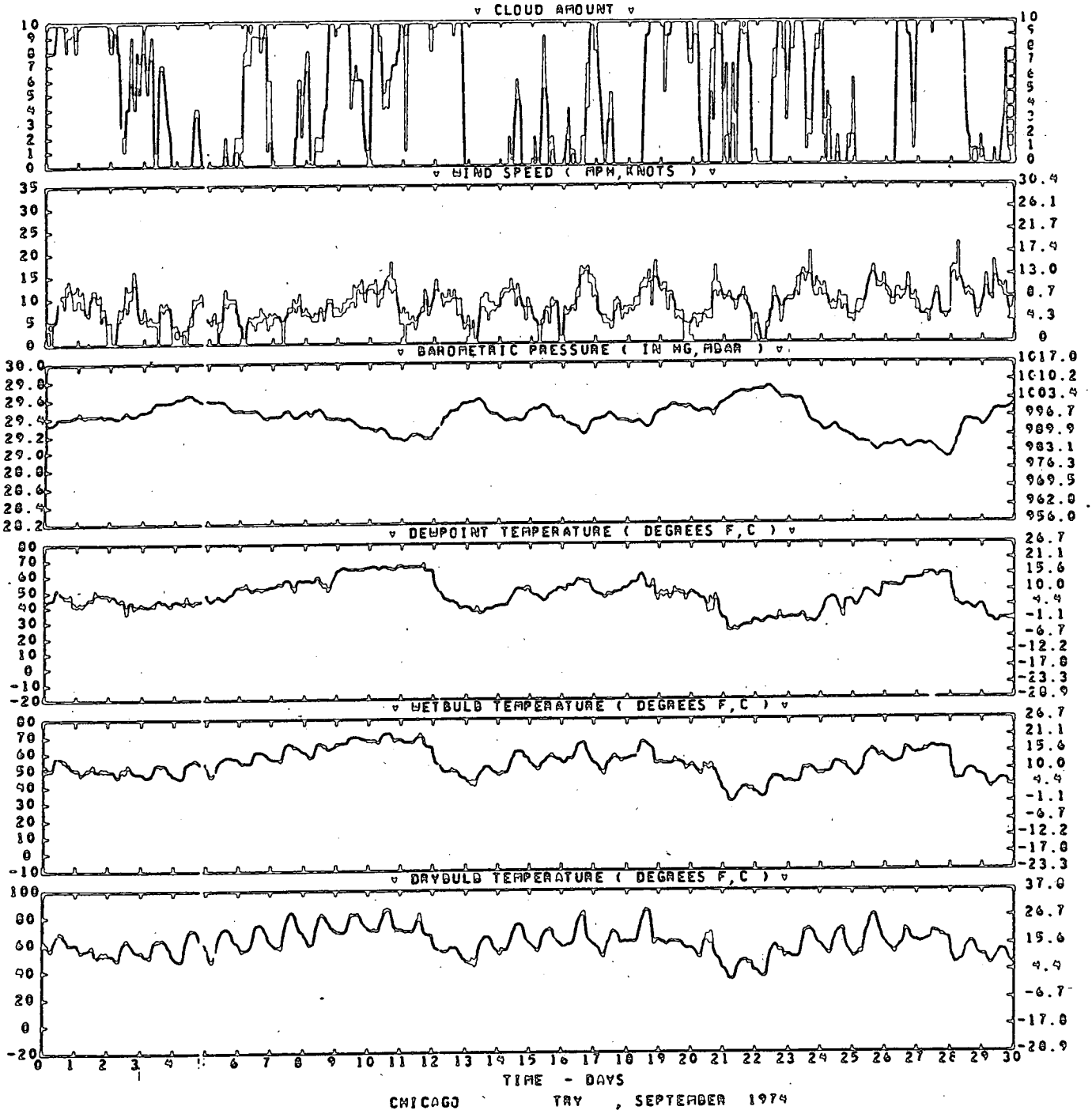

Chicago Weather Plots (continued)

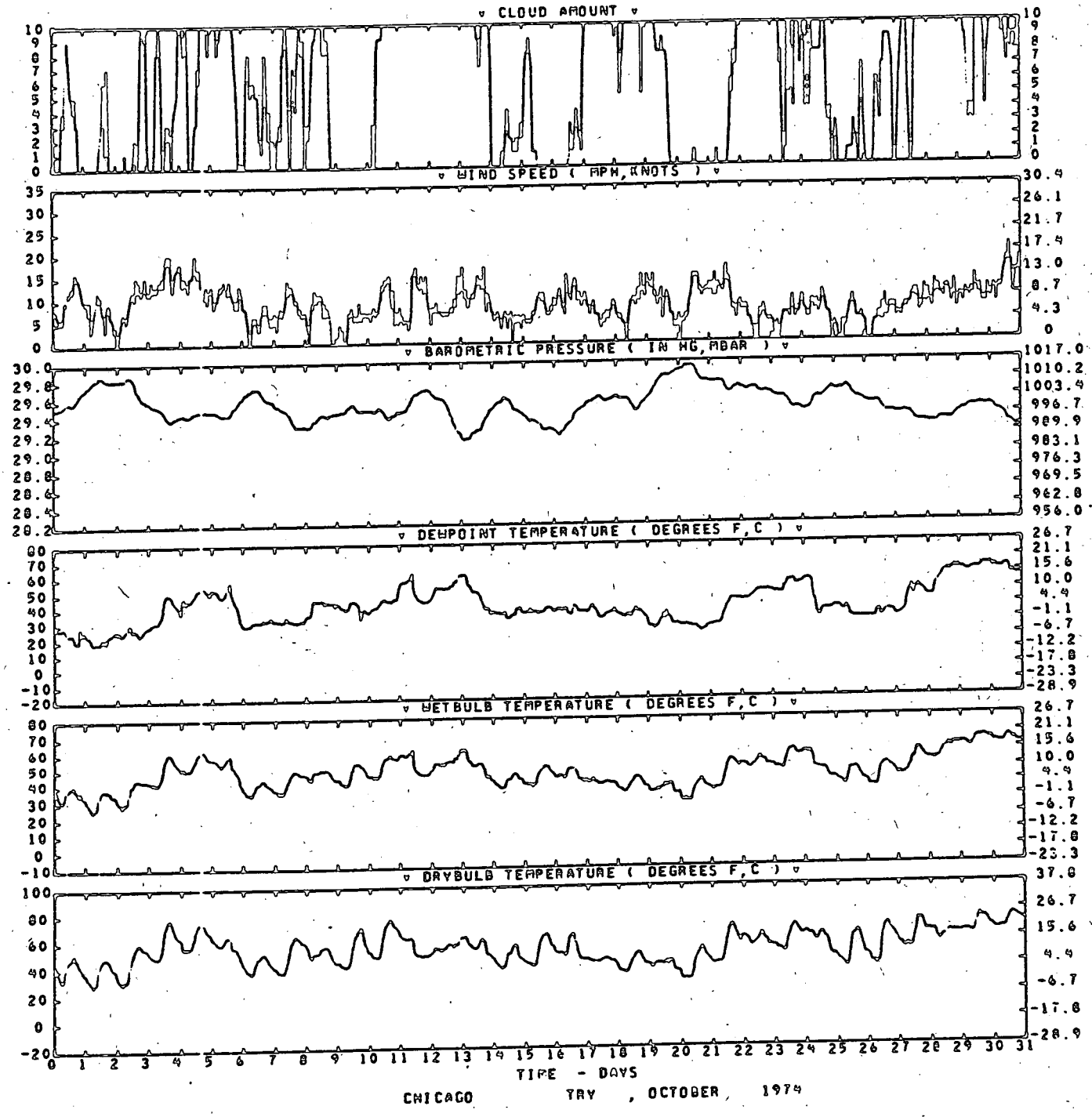

Chicago Weather Plots (continued)

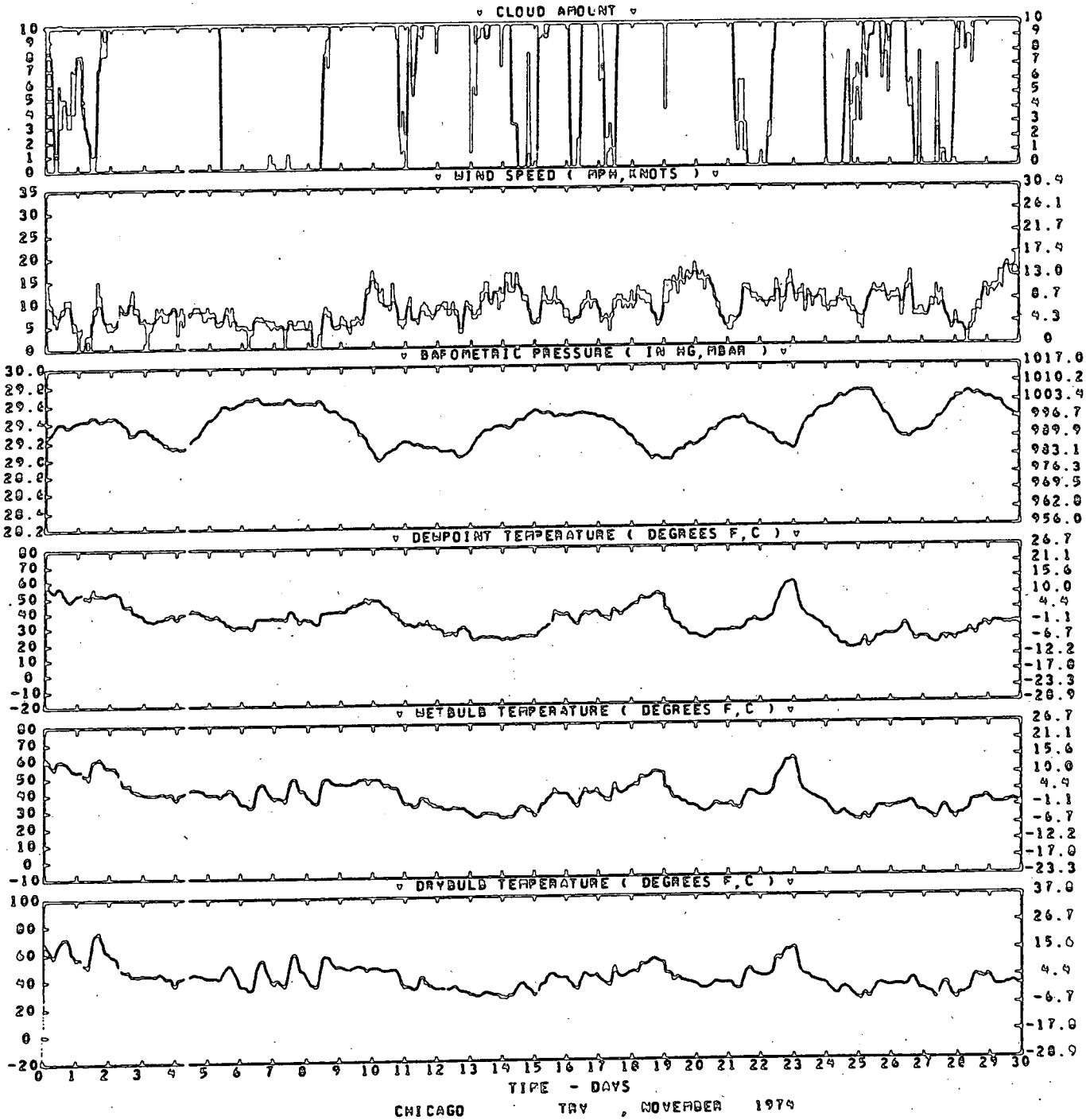

Chicago Weather Plots (continued)

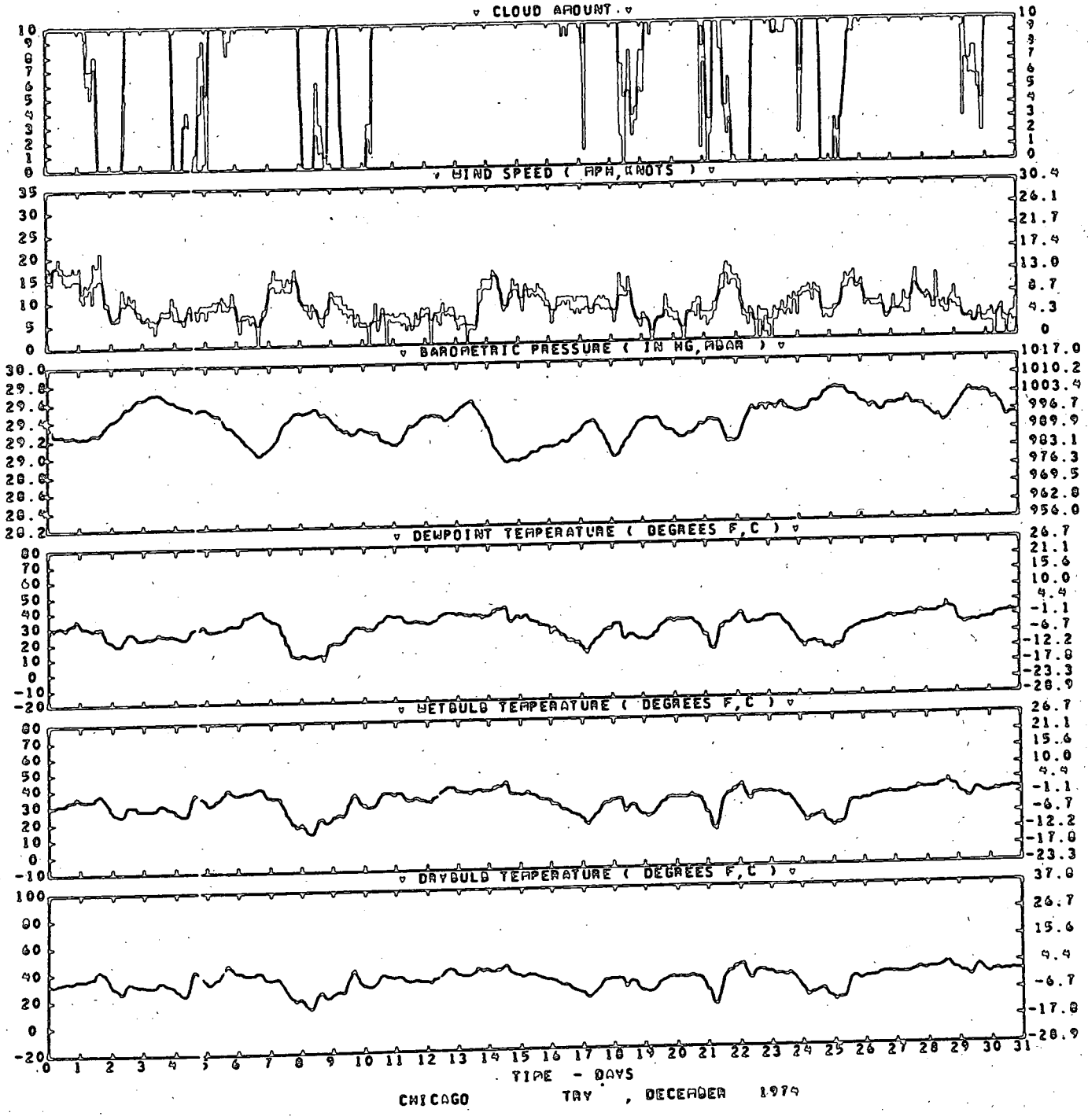

Simple Structure, Run 1

Simple one-zone building. FRONT-1, RIGHT-1, etc., are u-names for the front wall, right-hand wall, etc. The building coordinate axes (X, Y, and Z) are shown. The building is oriented 30° from true north.

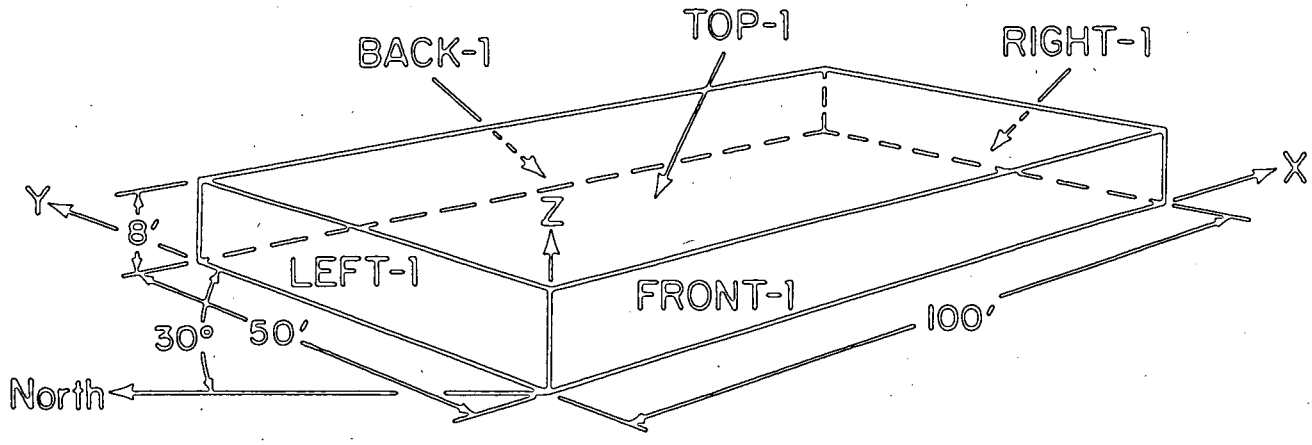

XBL 791-36

Simple Structure, Run 1

DrawBDL axonometric view of surfaces as input to BDL. The roof is not shown.

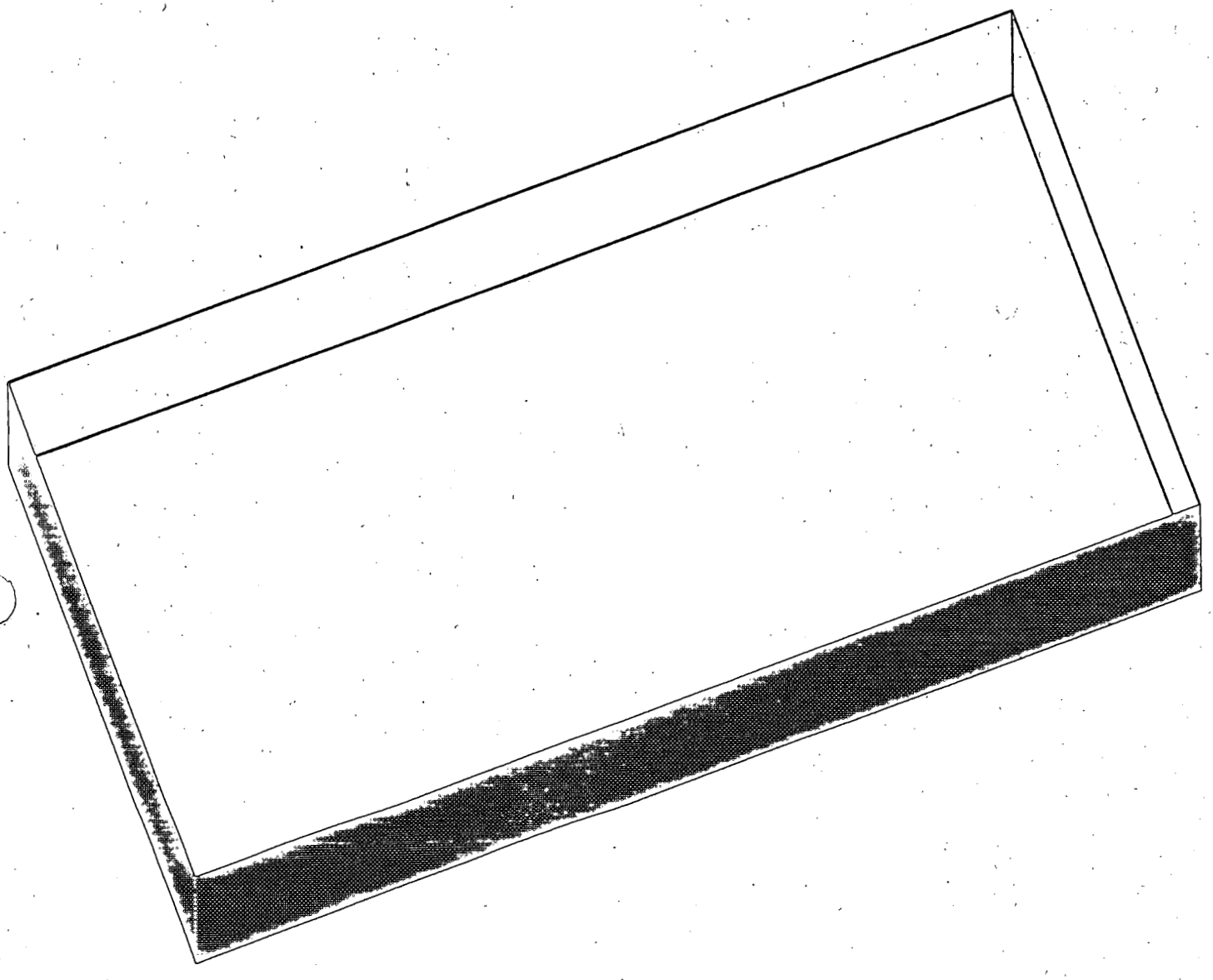

79136A

```
****     ***    *****          ***      *    *****
*  *   *  *   *              *  *     **    *
*  *   *  *   *****   ***      *      *    *****
*  *   *  *   *               **      *    *
****     ***    *****          *****  *  ***   *****
```

B U I L D I N G E N E R G Y A N A L Y S I S P R O G R A M

DEVELOPED BY

LAWRENCE BERKELEY LABORATORY/UNIVERSITY OF CALIFORNIA,
WITH THE ASSISTANCE OF HIRSCH & ASSOCIATES, CAMARILLO, CA

WITH MAJOR SUPPORT FROM

UNITED STATES DEPARTMENT OF ENERGY
ASSISTANT SECRETARY FOR ENERGY EFFICIENCY AND RENEWABLE ENERGY
OFFICE OF BUILDING TECHNOLOGIES
BUILDING SYSTEMS AND MATERIALS DIVISION

AND ADDITIONAL SUPPORT FROM

SOUTHERN CALIFORNIA EDISON CO., PACIFIC GAS AND ELECTRIC CO.,
GAS RESEARCH INSTITUTE, ELECTRIC POWER RESEARCH INSTITUTE

COPYRIGHT 1993 REGENTS OF THE UNIVERSITY OF CALIFORNIA,
LAWRENCE BERKELEY LABORATORY

L E G A L N O T I C E

THIS PROGRAM WAS PREPARED AS AN ACCOUNT OF WORK SPONSORED BY THE UNITED STATES GOVERNMENT. NEITHER THE UNITED STATES NOR THE DEPARTMENT OF ENERGY, NOR ANY OF THEIR EMPLOYEES, NOR ANY OF THEIR CONTRACTORS, SUBCONTRACTORS, OR THEIR EMPLOYEES, MAKES ANY WARRANTY, EXPRESS OR IMPLIED, OR ASSUMES ANY LEGAL LIABILITY OR RESPONSIBILITY FOR THE ACCURACY, COMPLETENESS OR USEFULNESS OF ANY INFORMATION, APPARATUS, PRODUCT OR PROCESS DISCLOSED, OR REPRESENTS THAT ITS USE WOULD NOT INFRINGE PRIVATELY OWNED RIGHTS.

LBL RELEASE OCT 1993 version : 2.1E-001

° 1 ° INPUT LOADS ..

L D L P R O C E S S O R I N P U T D A T A

Thu Nov 4 16:29:40 1993LDL RUN 1

```
*  2 * TITLE  LINE-1 *SIMPLE STRUCTURE RUN 1, CHICAGO*
*  3 *        LINE-2 *BOX WITH NO WINDOWS OR INTERNAL LOADS*
*  4 *        LINE-3 *LOADS CALCULATION ONLY; NO SYSTEM* ..
*  5 *
*  6 *
*  7 *                RUN-PERIOD         JAN 1 1974  THRU  DEC 31 1974  ..
*  8 *
*  9 *                ABORT              ERRORS     ..
* 10 *                DIAGNOSTIC         WARNINGS   ..
* 11 *                LOADS-REPORT       SUMMARY=(LS-C,LS-D)   ..
* 12 *                BUILDING-LOCATION  LATITUDE=42.0  LONGITUDE=88.0
* 13 *                                   ALTITUDE=610
* 14 *                                   TIME-ZONE=6   AZIMUTH=30.0      ..
* 15 *
* 16 *                         $ BUILDING DESCRIPTION
* 17 *
* 18 * $ STRUCTURE  WOOD FRAME WALLS AND ROOF; 4IN CONCRETE SLAB-ON-GRADE.
* 19 * $           NO WINDOWS OR DOORS; ONE ZONE.
* 20 *
* 21 * $ WALLS      USING CODE-WORDS FROM DOE-2 LIBRARY ( REFERENCE MANUAL PART 2 )
* 22 * $           STARTING WITH OUTSIDE MATERIAL: WOOD SHINGLES (WD01); PLYWOOD
* 23 * $           (PW03); R-11 FIBER INSULATION (IN02); AND GYPSUM BOARD (GP01).
* 24 *
* 25 * $ ROOF       ROOF GRAVEL (RG01), BUILT-UP ROOFING (BR01), R-3 MINERAL BOARD
* 26 * $           INSULATION (IN22), WOOD SHEATHING CEILING (WD01), AND I-F-R=.76 .
* 27 *
* 28 * $ SLAB-ON-GRADE EFFECTIVE U-VALUE = .05  (I.E., ASSUMING 4* HEAVY CONCRETE SLAB
* 29 * $ U-EFF= (U SLAB + AIR FILM) * AREA (1FT PERIMETER)/ TOTAL AREA
* 30 * $      = 0.8 * 300/5000 = .05
* 31 * $ INTERIOR DESIGN TEMPERATURE IS 70F.  EXTERIOR DESIGN FOR CHICAGO, IL USING
* 32 * $           TEST REFERENCE YEAR (TRY) WEATHER TAPE.
* 33 *
* 34 * $ INTERIOR LOADS: NO PEOPLE, NO LIGHTS, NO EQUIPMENT AND NO INFILTRATION.
* 35 *
* 36 *                         $ CONSTRUCTION TYPES
* 37 *
* 38 * WA-1-2=LAYERS  MATERIAL=(WD01,PW03,IN02,GP01)  ..
* 39 * RB-1-1=LAYERS  MATERIAL=(RG01,BR01,IN22,WD01)  I-F-R=.76  ..
* 40 * WALL-1        =CONSTRUCTION       LAYERS=WA-1-2     ..
* 41 * ROOF-1        =CONSTRUCTION       LAYERS=RB-1-1     ..
* 42 * FLOOR-1       =CONSTRUCTION       U = 0.05     ..
* 43 *
* 44 *                         $ GENERAL SPACE DEFINITIONS
* 45 *
* 46 * ROOM-1        =SPACE              AREA = 5000
* 47 *                                    VOLUME=40000  ..
* 48 *
* 49 *     FRONT-1   =EXTERIOR-WALL      HEIGHT = 8            WIDTH = 100
* 50 *                                   AZIMUTH = 180
* 51 *                                   CONSTRUCTION = WALL-1    ..
* 52 *
* 53 *     RIGHT-1   =EXTERIOR-WALL      HEIGHT = 8            WIDTH =  50
* 54 *                                   X=100                 AZIMUTH = 90
* 55 *                                   CONSTRUCTION = WALL-1    ..
* 56 *
```

```
* 57 *     BACK-1     =EXTERIOR-WALL      HEIGHT = 8            WIDTH = 100
* 58 *                                    X=100     Y=50        AZIMUTH = 0
* 59 *                                    CONSTRUCTION = WALL-1   ..
* 60 *
* 61 *     LEFT-1     =EXTERIOR-WALL      HEIGHT = 8            WIDTH = 50
* 62 *                                    Y=50                  AZIMUTH = 270
* 63 *                                    CONSTRUCTION = WALL-1    ..
* 64 *
* 65 *     TOP-1      =ROOF               HEIGHT=50             WIDTH=100
* 66 *                                    X=0  Y=0  Z=8         AZIMUTH=180
* 67 *                                    TILT = 0              GND-REFLECTANCE=0
* 68 *                                    CONSTRUCTION = ROOF-1    ..
* 69 *
* 70 *     BOTTOM-1   =UNDERGROUND-FLOOR  AREA = 5000
* 71 *                                    CONSTRUCTION = FLOOR-1    ..
* 72 *
* 73 * END  ..
* 74 * COMPUTE LOADS   ..
* 75 * INPUT LOADS  ..
```

*** BUILDING ***

FLOOR AREA	5000	SQFT	465	SQMT
VOLUME	40000	CUFT	1133	CUMT

	COOLING LOAD		HEATING LOAD	
TIME	JUL 7 5PM		JAN 12 8AM	
DRY-BULB TEMP	88F	31C	-7F	-22C
WET-BULB TEMP	73F	23C	-7F	-22C

	SENSIBLE (KBTU/H)	SENSIBLE (KW)	LATENT (KBTU/H)	LATENT (KW)	SENSIBLE (KBTU/H)	SENSIBLE (KW)
WALL CONDUCTION	6.736	1.974	0.000	0.000	-11.817	-3.462
ROOF CONDUCTION	58.992	17.285	0.000	0.000	-65.649	-19.235
WINDOW GLASS+FRM COND	0.000	0.000	0.000	0.000	0.000	0.000
WINDOW GLASS SOLAR	0.000	0.000	0.000	0.000	0.000	0.000
DOOR CONDUCTION	0.000	0.000	0.000	0.000	0.000	0.000
INTERNAL SURFACE COND	0.000	0.000	0.000	0.000	0.000	0.000
UNDERGROUND SURF COND	-1.500	-0.440	0.000	0.000	-7.500	-2.197
OCCUPANTS TO SPACE	0.000	0.000	0.000	0.000	0.000	0.000
LIGHT TO SPACE	0.000	0.000	0.000	0.000	0.000	0.000
EQUIPMENT TO SPACE	0.000	0.000	0.000	0.000	0.000	0.000
PROCESS TO SPACE	0.000	0.000	0.000	0.000	0.000	0.000
INFILTRATION	0.000	0.000	0.000	0.000	0.000	0.000
TOTAL	64.229	18.819	0.000	0.000	-84.966	-24.895

TOTAL LOAD	64.229 KBTU/H	18.819 KW	-84.966 KBTU/H	-24.895 KW
TOTAL LOAD / AREA	12.85BTU/H.SQFT	40.513 W /SQMT	16.993BTU/H.SQFT	53.594 W /SQMT

```
*************************************************************
*                                                           *
*  NOTE  1)THE ABOVE LOADS EXCLUDE OUTSIDE VENTILATION AIR  *
*  ----    LOADS                                            *
*        2)TIMES GIVEN IN STANDARD TIME FOR THE LOCATION    *
*          IN CONSIDERATION                                 *
*                                                           *
*************************************************************
```

SIMPLE STRUCTURE RUN 1, CHICAGO BOX WITH NO WINDOWS OR INTERNAL LOADS DOE-2.1E-001 Thu Nov 4 16:29:40 1993LDL RUN 1
LOADS CALCULATION ONLY; NO SYSTEM
REPORT- LS-D BUILDING MONTHLY LOADS SUMMARY WEATHER FILE- TRY CHICAGO

	COOLING						HEATING						ELEC	
MONTH	COOLING ENERGY (MBTU)	TIME OF MAX DY	TIME OF MAX HR	DRY-BULB TEMP	WET-BULB TEMP	MAXIMUM COOLING LOAD (KBTU/HR)	HEATING ENERGY (MBTU)	TIME OF MAX DY	TIME OF MAX HR	DRY-BULB TEMP	WET-BULB TEMP	MAXIMUM HEATING LOAD (KBTU/HR)	ELEC-TRICAL ENERGY (KWH)	MAXIMUM ELEC LOAD (KW)
JAN	0.00000					0.000	-38.562	12	8	-7.F	-7.F	-84.966	0.	0.000
FEB	0.00000					0.000	-32.757	9	7	2.F	2.F	-80.206	0.	0.000
MAR	0.03277	31	14	48.F	41.F	9.078	-26.061	24	7	6.F	5.F	-71.127	0.	0.000
APR	1.34771	26	14	76.F	60.F	35.023	-13.536	6	5	29.F	28.F	-54.199	0.	0.000
MAY	3.05213	21	13	85.F	75.F	45.945	-8.525	7	6	33.F	30.F	-46.366	0.	0.000
JUN	7.58150	20	15	90.F	77.F	53.930	-3.233	1	6	47.F	46.F	-27.054	0.	0.000
JUL	14.46844	7	16	88.F	73.F	64.229	-0.860	24	5	61.F	61.F	-17.838	0.	0.000
AUG	10.61643	19	15	90.F	71.F	55.359	-1.278	5	6	52.F	50.F	-19.350	0.	0.000
SEP	4.27242	9	15	82.F	64.F	44.843	-6.121	23	6	37.F	34.F	-43.827	0.	0.000
OCT	0.61387	10	15	68.F	54.F	20.680	-12.540	21	7	30.F	29.F	-48.419	0.	0.000
NOV	0.11186	2	14	75.F	61.F	13.663	-23.534	26	3	26.F	24.F	-54.207	0.	0.000
DEC	0.00000					0.000	-33.368	26	3	15.F	15.F	-68.061	0.	0.000
TOTAL	42.097						-200.376						0.	
MAX						64.229						-84.966		0.000

Simple Structure, Run 2

Add doors, windows, people, lighting, and equipment to Run 1 building. U-names (WF–1, DF–1, etc.) are indicated for the windows and doors on each surface.

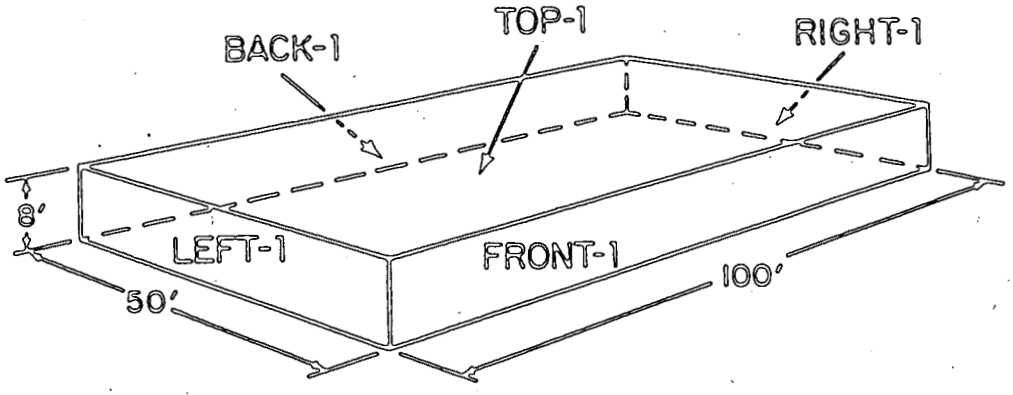

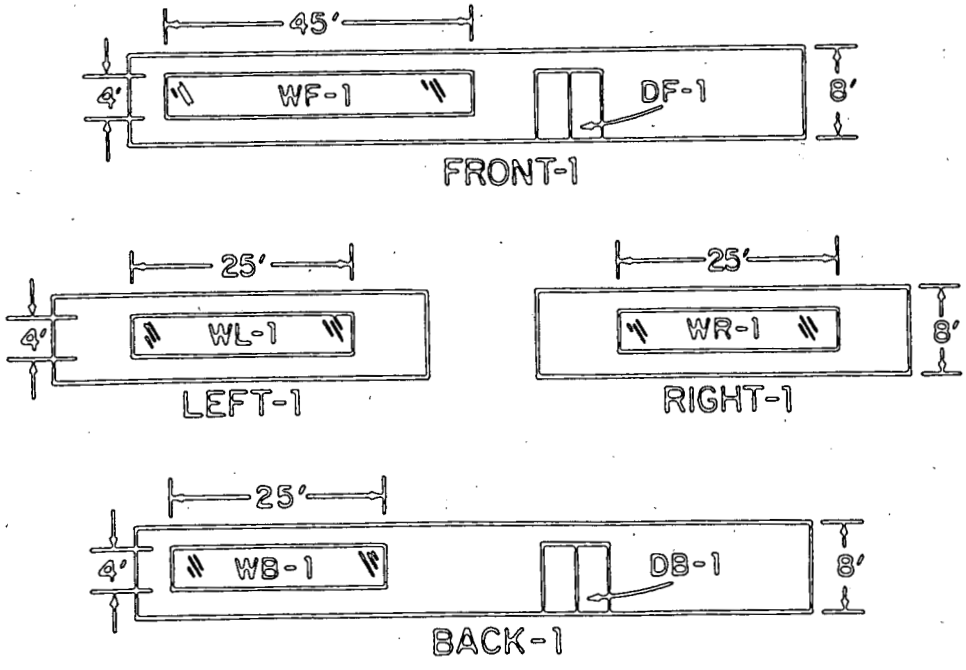

XBL791-35

Simple Structure, Run 2

DrawBDL axonometric view of surfaces as input to BDL. The roof is not shown.

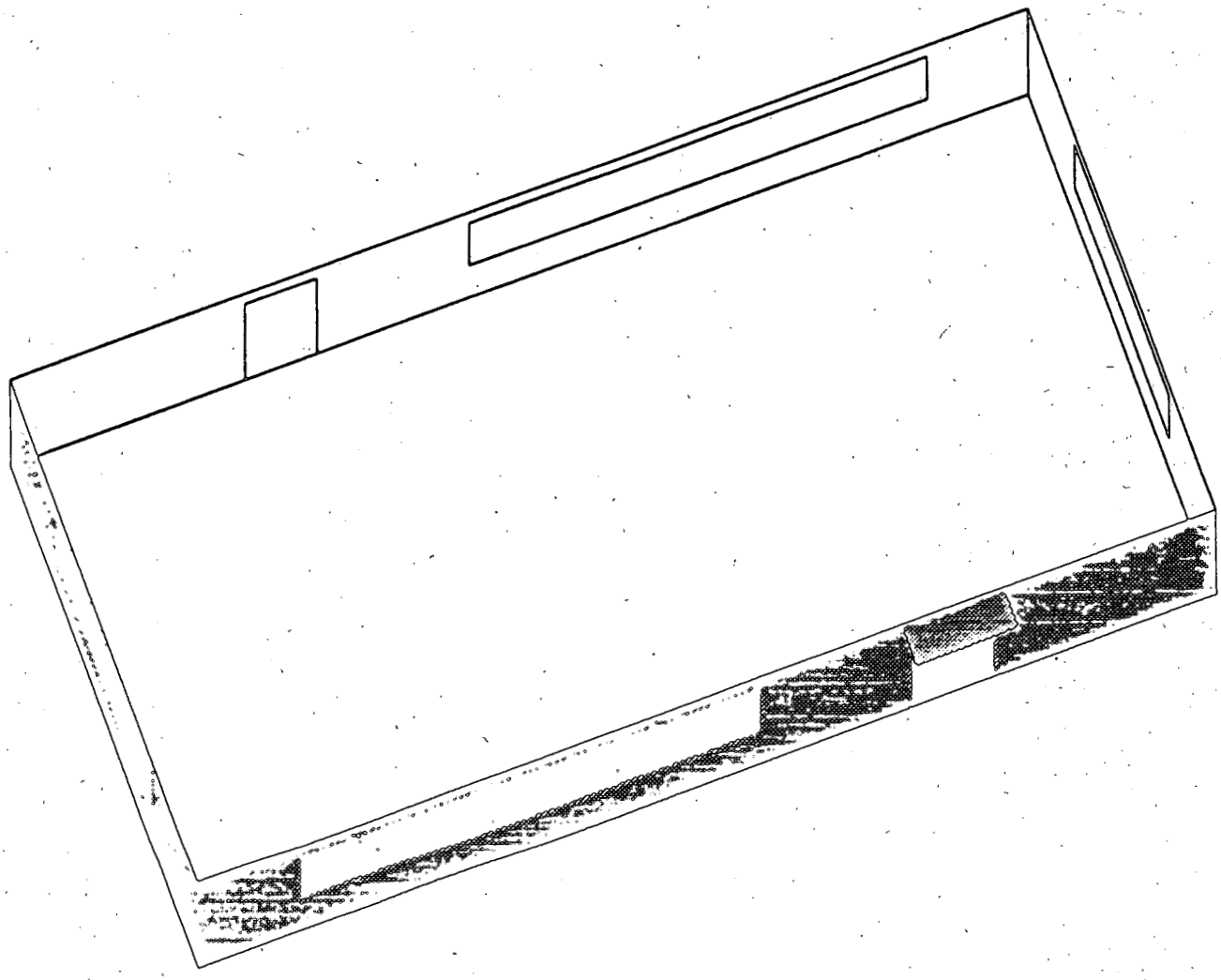

79135A

L D L P R O C E S S O R I N P U T D A T A

Thu Nov 4 16:29:40 1993LDL RUN 2

```
*  76 * TITLE    LINE-1 *SIMPLE STRUCTURE RUN 2, CHICAGO *
*  77 *          LINE-2 *ADD WINDOWS, DOORS, INTERNAL LOADS*
*  78 *          LINE-3 *LOADS CALCULATION ONLY; NO SYSTEM* ..
*  79 *
*  80 *                 RUN-PERIOD         JAN 1 1974  THRU  DEC 31 1974    ..
*  81 *
*  82 *                 ABORT              ERRORS   ..
*  83 *                 DIAGNOSTIC         WARNINGS  ..
*  84 *                 LOADS-REPORT       SUMMARY= (LS-C,LS-D)  ..
*  85 *                 BUILDING-LOCATION  LATITUDE=42.0  LONGITUDE=88.0
*  86 *                                    ALTITUDE=610
*  87 *                                    TIME-ZONE=6   AZIMUTH=30.0   ..
*  88 *
*  89 *                         $ BUILDING DESCRIPTION
*  90 *
*  91 * $ BUILDING SHELL IS SAME AS FOR SIMPLE STRUCTURE RUN 1 WITH THE ADDITION OF
*  92 * $               WINDOWS AND DOORS.
*  93 *
*  94 * $ WINDOW GLASS:  1/4IN PLATE DOUBLE PANE AND NO INTERNAL SHADING DEVICE.
*  95 * $ DOOR GLASS:    1/2IN PLATE SINGLE PANE. THERE IS A 10FT WIDE X 4FT DEEP
*  96 * $                OVERHANG AT THE FRONT DOOR DF-1.
*  97 *
*  98 * $ INTERIOR LOADS: ADD SURFACE MOUNTED FLUORESCENT LIGHTING AT
*  99 * $                  1.5 WATTS/SQFT.
* 100 * $                 ADD RECEPTACLES FOR EQUIPMENT AT 1 WATT/SQFT.
* 101 * $                 ADD PEOPLE AT 100 SQFT PER PERSON.
* 102 *
* 103 *
* 104 *                          $ CONSTRUCTIONS AND GLASS TYPES
* 105 *
* 106 * WA-1-2=LAYERS  MATERIAL=(WD01,PW03,IN02,GP01)  ..
* 107 * RB-1-1=LAYERS  MATERIAL=(RG01,BR01,IN22,WD01)  I-F-R=.76  ..
* 108 * ROOF-1        =CONSTRUCTION       LAYERS=RB-1-1  ..
* 109 * WALL-1        =CONSTRUCTION       LAYERS=WA-1-2  ..
* 110 * FLOOR-1       =CONSTRUCTION       U = 0.05   ..
* 111 * WINDOW-1      =GLASS-TYPE         GLASS-TYPE-CODE = 3  PANES = 2  ..
* 112 * DOORS         =GLASS-TYPE         GLASS-TYPE-CODE = 5  ..
* 113 *
* 114 *                          $ OCCUPANCY SCHEDULE
* 115 *
* 116 * OC-1          =DAY-SCHEDULE       (1,8) (0.0)
* 117 *                                   (9,11) (1.0)
* 118 *                                   (12,14) (0.8,0.4,0.8)
* 119 *                                   (15,18) (1.0)
* 120 *                                   (19,21) (0.5,0.1,0.1)
* 121 *                                   (22,24) (0.0)   ..
* 122 *
* 123 * OC-2          =DAY-SCHEDULE       (1,24) (0.0)    ..
* 124 *
* 125 * OC-WEEK       =WEEK-SCHEDULE      (WD) OC-1 (WEH) OC-2  ..
* 126 *
* 127 * OCCUPY-1      =SCHEDULE           THRU DEC 31 OC-WEEK   ..
* 128 *
* 129 *                         $ LIGHTING SCHEDULE
* 130 *
```

```
* 131 * LT-1          =DAY-SCHEDULE       (1,8) (0.05)
* 132 *                                   (9,14) (0.9,0.95,1.0,0.95,0.8,0.9)
* 133 *                                   (15,18) (1.0)
* 134 *                                   (19,21) (0.6,0.2,0.2)
* 135 *                                   (22,24) (0.05)  ..
* 136 *
* 137 * LT-2          =DAY-SCHEDULE       (1,24) (0.05)   ..
* 138 *
* 139 * LT-WEEK       =WEEK-SCHEDULE      (MON,FRI) LT-1   (WEH) LT-2   ..
* 140 *
* 141 * LIGHTS-1      =SCHEDULE           THRU DEC 31 LT-WEEK   ..
* 142 *
* 143 *                        $ OFFICE EQUIPMENT SCHEDULE
* 144 *
* 145 * EQ-1          =DAY-SCHEDULE       (1,8) (0.02)
* 146 *                                   (9,14) (0.8)
* 147 *                                   (15,20) (0.8,0.7,0.5,0.5,0.3,0.3)
* 148 *                                   (21,24) (0.02)   ..
* 149 *
* 150 * EQ-2          =DAY-SCHEDULE       (1,24) (0.02)  ..
* 151 *
* 152 * EQ-WEEK       =WEEK-SCHEDULE      (MON,FRI) EQ-1   (WEH) EQ-2   ..
* 153 *
* 154 * EQUIP-1       =SCHEDULE           THRU DEC 31 EQ-WEEK   ..
* 155 *
* 156 *                        $ SET DEFAULT VALUES
* 157 *
* 158 *                SET-DEFAULT FOR SPACE   FLOOR-WEIGHT = 70   ..
* 159 *                SET-DEFAULT FOR WINDOW  HEIGHT=4.0  GLASS-TYPE=WINDOW-1  Y=3  ..
* 160 *
* 161 *                         $ SPACE DEFINITION
* 162 *
* 163 * OFFICE         =SPACE              AREA = 5000   VOLUME = 40000
* 164 *                                    PEOPLE-SCHEDULE = OCCUPY-1
* 165 *                                    LIGHTING-SCHEDULE = LIGHTS-1
* 166 *                                    EQUIP-SCHEDULE = EQUIP-1
* 167 *                                    LIGHTING-TYPE = REC-FLUOR-RV
* 168 *                                    LIGHTING-W/SQFT = 1.5
* 169 *                                    LIGHT-TO-SPACE = .80
* 170 *                                    EQUIPMENT-W/SQFT = 1
* 171 *                                    NUMBER-OF-PEOPLE = 50  ..
* 172 *
* 173 *     FRONT-1    =EXTERIOR-WALL      HEIGHT = 8            WIDTH = 100
* 174 *                                    X=0  Y=0  Z=0         AZIMUTH=180
* 175 *                                    CONSTRUCTION = WALL-1  ..
* 176 *
* 177 *       WF-1     =WINDOW             WIDTH = 45            X = 10 ..
* 178 *       DF-1     =WINDOW             WIDTH = 8             HEIGHT = 8
* 179 *                                    X = 70                Y = 0
* 180 *                                    GLASS-TYPE=DOORS      OVERHANG-A 1.0
* 181 *                                    OVERHANG-W 10         OVERHANG-D 4  ..
* 182 *
* 183 *     RIGHT-1    =EXTERIOR-WALL      HEIGHT = 8            WIDTH =  50
* 184 *                                    X=100                 AZIMUTH = 90
* 185 *                                    CONSTRUCTION = WALL-1   ..
* 186 *
* 187 *       WR-1     =WINDOW             WIDTH = 25            X = 12.5  ..
* 188 *
* 189 *     BACK-1     =EXTERIOR-WALL      HEIGHT = 8            WIDTH = 100
* 190 *                                    X=100     Y=50        AZIMUTH = 0
* 191 *                                    CONSTRUCTION = WALL-1   ..
* 192 *
* 193 *       WB-1     =WINDOW             WIDTH = 45            X = 10  ..
```

```
* 194 *       DB-1     =WINDOW             WIDTH = 7              HEIGHT = 7
* 195 *                                    X = 70                 Y = 0
* 196 *                                    GLASS-TYPE=DOORS  ..
* 197 *
* 198 *     LEFT-1     =EXTERIOR-WALL      HEIGHT = 8             WIDTH =  50
* 199 *                                    Y=50                   AZIMUTH = 270
* 200 *                                    CONSTRUCTION = WALL-1   ..
* 201 *
* 202 *       WL-1     =WINDOW             WIDTH =25              X = 12.5  ..
* 203 *
* 204 *     TOP-1      =ROOF               HEIGHT=50              WIDTH=100
* 205 *                                    X=0  Y=0  Z=8          AZIMUTH=180
* 206 *                                    TILT = 0               GND-REFLECTANCE=0
* 207 *                                    CONSTRUCTION = ROOF-1   ..
* 208 *
* 209 *     BOTTOM-1   =UNDERGROUND-FLOOR  AREA = 5000
* 210 *                                    CONSTRUCTION = FLOOR-1  ..
* 211 *
* 212 * END ..
* 213 * COMPUTE LOADS  ..
* 214 * INPUT LOADS  ..
```

*** BUILDING ***

FLOOR AREA	5000	SQFT	465	SQMT
VOLUME	40000	CUFT	1133	CUMT

	COOLING LOAD		HEATING LOAD	
TIME	JUL 9 4PM		JAN 12 8AM	
DRY-BULB TEMP	94F	34C	-7F	-22C
WET-BULB TEMP	74F	23C	-7F	-22C

	SENSIBLE (KBTU/H)	SENSIBLE (KW)	LATENT (KBTU/H)	LATENT (KW)	SENSIBLE (KBTU/H)	SENSIBLE (KW)
WALL CONDUCTION	4.434	1.299	0.000	0.000	-8.502	-2.491
ROOF CONDUCTION	57.674	16.898	0.000	0.000	-65.649	-19.235
WINDOW GLASS+FRM COND	10.552	3.092	0.000	0.000	-25.498	-7.471
WINDOW GLASS SOLAR	26.793	7.850	0.000	0.000	1.771	0.519
DOOR CONDUCTION	0.000	0.000	0.000	0.000	0.000	0.000
INTERNAL SURFACE COND	0.000	0.000	0.000	0.000	0.000	0.000
UNDERGROUND SURF COND	-1.500	-0.440	0.000	0.000	-7.500	-2.197
OCCUPANTS TO SPACE	0.000	0.000	0.000	0.000	0.000	0.000
LIGHT TO SPACE	17.469	5.118	0.000	0.000	2.195	0.643
EQUIPMENT TO SPACE	11.061	3.241	0.000	0.000	0.889	0.261
PROCESS TO SPACE	0.000	0.000	0.000	0.000	0.000	0.000
INFILTRATION	0.000	0.000	0.000	0.000	0.000	0.000
TOTAL	126.482	37.059	0.000	0.000	-102.294	-29.972
TOTAL LOAD	126.482 KBTU/H		37.059 KW		-102.294 KBTU/H	-29.972 KW
TOTAL LOAD / AREA	25.30BTU/H.SQFT		79.781 W /SQMT		20.459BTU/H.SQFT	64.523 W /SQMT

NOTE 1)THE ABOVE LOADS EXCLUDE OUTSIDE VENTILATION AIR LOADS
2)TIMES GIVEN IN STANDARD TIME FOR THE LOCATION IN CONSIDERATION

SIMPLE STRUCTURE RUN 2, CHICAGO ADD WINDOWS, DOORS, INTERNAL LOADS DOE-2.1E-001 Thu Nov 4 16:29:40 1993LDL RUN 2
LOADS CALCULATION ONLY; NO SYSTEM
REPORT- LS-D BUILDING MONTHLY LOADS SUMMARY WEATHER FILE- TRY CHICAGO

	COOLING						HEATING						ELEC	
MONTH	COOLING ENERGY (MBTU)	TIME OF MAX DY	TIME OF MAX HR	DRY-BULB TEMP	WET-BULB TEMP	MAXIMUM COOLING LOAD (KBTU/HR)	HEATING ENERGY (MBTU)	TIME OF MAX DY	TIME OF MAX HR	DRY-BULB TEMP	WET-BULB TEMP	MAXIMUM HEATING LOAD (KBTU/HR)	ELEC-TRICAL ENERGY (KWH)	MAXIMUM ELEC LOAD (KW)
JAN	0.48697	25	15	47.F	42.F	31.527	-35.438	12	8	-7.F	-7.F	-102.294	2821.	11.500
FEB	0.74419	28	15	52.F	42.F	38.771	-29.251	9	7	2.F	2.F	-90.880	2451.	11.500
MAR	2.29542	7	15	51.F	44.F	45.830	-20.445	24	6	8.F	7.F	-85.959	2709.	11.500
APR	10.26131	26	15	78.F	61.F	94.872	-9.106	6	5	29.F	28.F	-59.079	2810.	11.500
MAY	15.36234	21	13	85.F	75.F	102.277	-4.975	7	5	33.F	29.F	-45.545	2821.	11.500
JUN	23.72126	20	15	90.F	77.F	115.939	-1.413	1	5	48.F	47.F	-24.609	2585.	11.500
JUL	35.03819	9	15	94.F	74.F	126.482	-0.163	24	5	61.F	61.F	-12.003	2821.	11.500
AUG	28.86911	19	15	90.F	71.F	117.116	-0.389	5	5	55.F	54.F	-17.566	2821.	11.500
SEP	16.86412	9	15	82.F	64.F	103.219	-3.673	23	6	37.F	34.F	-48.682	2585.	11.500
OCT	8.72841	10	15	68.F	54.F	81.004	-8.767	21	6	30.F	29.F	-56.505	2821.	11.500
NOV	2.25103	8	15	60.F	49.F	63.562	-19.662	28	7	26.F	24.F	-61.162	2473.	11.500
DEC	0.26785	10	15	41.F	35.F	28.694	-30.776	26	4	15.F	15.F	-82.058	2709.	11.500
TOTAL	144.890						-164.058						32429.	
MAX						126.482						-102.294		11.500

Simple Structure, Run 3

Divide Run 2 building into five spaces and add 2-ft high plenum and HVAC system. Doors and windows are the same as for Run 2. U-names are shown for spaces (SPACE–1, etc.), interior walls between spaces (SB–15, etc.) and exterior walls (FRONT–1, WALL–1PF, etc.). Not shown are slab-on-grade surfaces (F1–1, etc.) and ceiling surfaces between conditioned zones and plenum (C1–1, etc.).

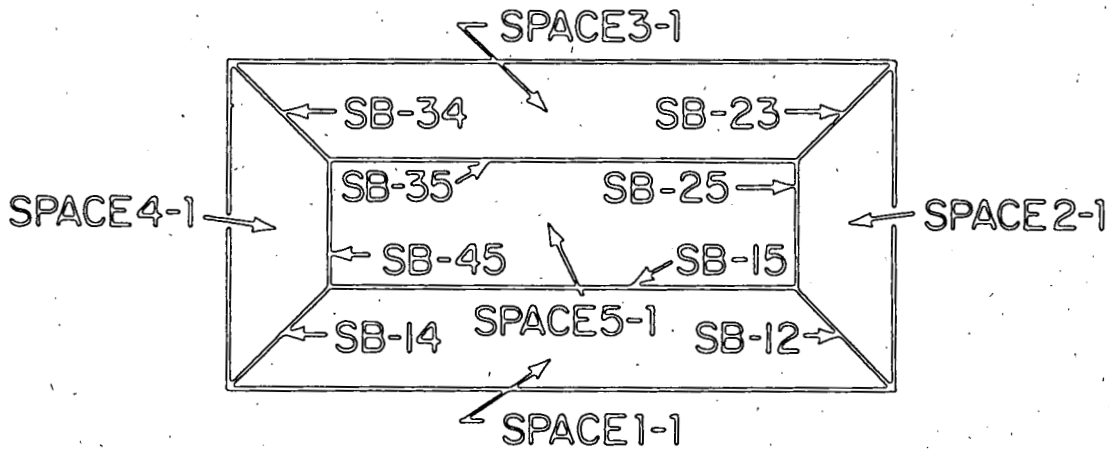

Plan view

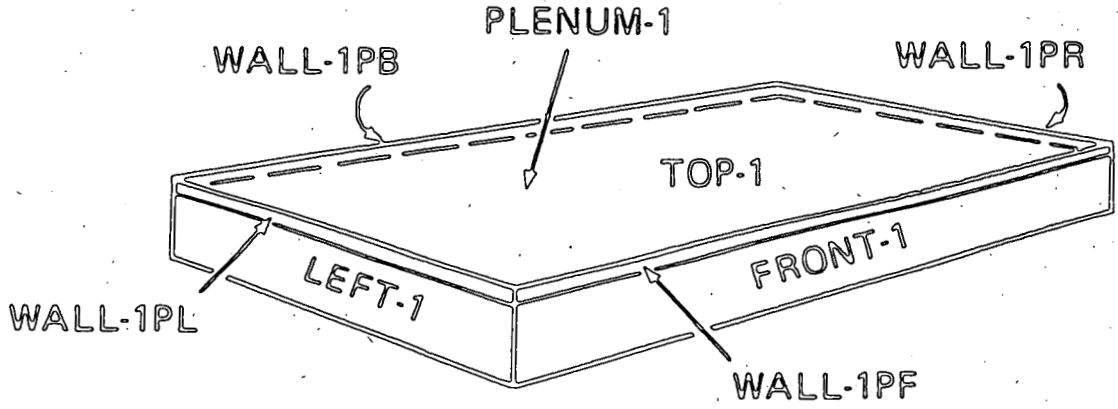

XBL791-37A

Simple Structure, Run 3

DrawBDL axonometric view of surfaces as input to BDL. The roof and interior surfaces are not shown.

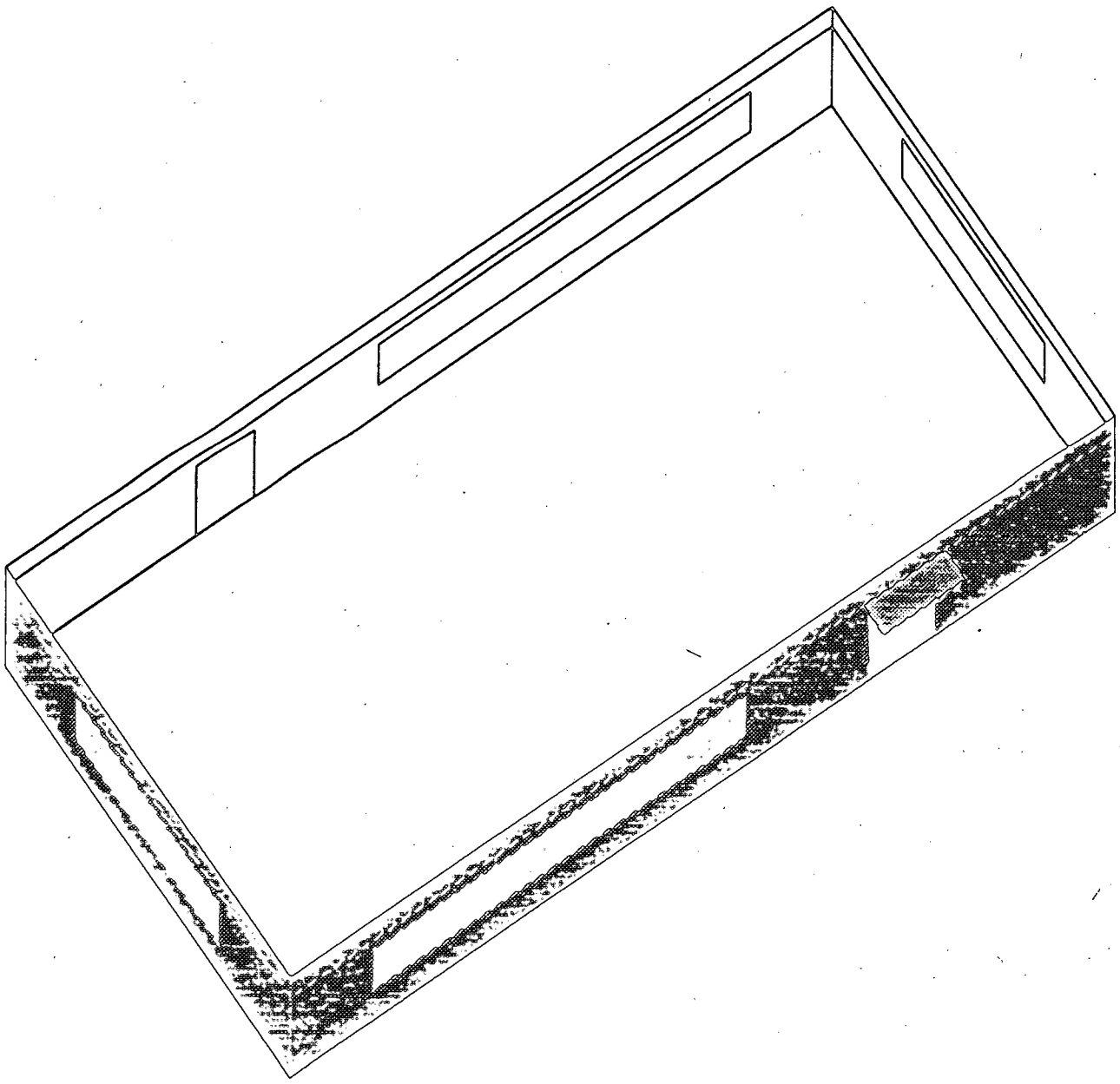

791-37AA

L D L P R O C E S S O R I N P U T D A T A

Thu Nov 4 16:29:40 1993LDL RUN 3

```
* 215 *
* 216 * TITLE    LINE-1 *SIMPLE STRUCTURE RUN 3, CHICAGO *
* 217 *         LINE-2 *DIVIDE INTO ZONES; ADD PLENUM *
* 218 *         LINE-3 *DESIGN-DAY SIZING OF VAV SYSTEM *
* 219 *         LINE-4 *SHOW ALL REPORTS * ..
* 220 *             ABORT              ERRORS     ..
* 221 *             DIAGNOSTIC         WARNINGS   ..
* 222 *
* 223 *             RUN-PERIOD         AUG 3 1974 THRU AUG  5 1974 $ TO SPAN WEEKEND
* 224 *                                JAN 5 1974 THRU JAN  7 1974 $      DITTO
* 225 *                                APR 6 1974 THRU APR  8 1974 $      DITTO
* 226 *                                JAN 1 1974 THRU DEC 31 1974  ..
* 227 *
* 228 *             LOADS-REPORT       VERIFICATION = (ALL-VERIFICATION)
* 229 *                                SUMMARY      = (ALL-SUMMARY)  ..
* 230 *
* 231 *             BUILDING-LOCATION  LATITUDE=42.0  LONGITUDE=88.0
* 232 *                                ALTITUDE=610
* 233 *                                TIME-ZONE=6  AZIMUTH=30.0   ..
* 234 *
* 235 *                        $ CHICAGO DESIGN DAYS
* 236 *
* 237 * HOT-CLEAR-SUMMER = DESIGN-DAY
* 238 *               DRYBULB-HI   = 91    DRYBULB-LO = 71
* 239 *               HOUR-HI      = 15    HOUR-LO    = 7
* 240 *               DEWPT-HI     = 65.5  DEWPT-LO   = 60
* 241 *               DHOUR-HI     = 16    DHOUR-LO   = 8
* 242 *               WIND-SPEED   = 7.5   WIND-DIR   = 10
* 243 *               CLOUD-AMOUNT = 0     CLOUD-TYPE = 0
* 244 *               CLEARNESS    = 1     GROUND-T = 61  ..
* 245 *
* 246 * COLD-CLOUDY-WINTER = DESIGN-DAY
* 247 *               DRYBULB-HI   = 6     DRYBULB-LO = -4
* 248 *               HOUR-HI      = 15    HOUR-LO    = 2
* 249 *               DEWPT-HI     = 6     DEWPT-LO   = -4
* 250 *               DHOUR-HI     = 16    DHOUR-LO   = 3
* 251 *               WIND-SPEED   = 15    WIND-DIR   = 14
* 252 *               CLOUD-AMOUNT = 5     CLOUD-TYPE = 2
* 253 *               CLEARNESS    = 1     GROUND-T = 46  ..
* 254 *
* 255 * WARM-CLEAR-WINTER = DESIGN-DAY
* 256 *               DRYBULB-HI   = 65    DRYBULB-LO = 40
* 257 *               HOUR-HI      = 15    HOUR-LO    = 7
* 258 *               DEWPT-HI     = 40    DEWPT-LO   = 35
* 259 *               DHOUR-HI     = 16    DHOUR-LO   = 8
* 260 *               WIND-SPEED   = 15    WIND-DIR   = 14
* 261 *               CLOUD-AMOUNT = 0     CLOUD-TYPE = 0
* 262 *               CLEARNESS    = 1     GROUND-T = 46  ..
* 263 *
* 264 *                        $ BUILDING DESCRIPTION
* 265 *
* 266 * $ BUILDING STRUCTURE IS THE SAME AS FOR SIMPLE STRUCTURE RUNS 1 & 2 WITH THE
* 267 * $               ADDITION OF A PLENUM.  THE SPACES ARE ALSO REDEFINED, WITH
* 268 * $               INTERIOR AND EXTERIOR AREAS SEPARATED BY PARTITIONS WITH
* 269 * $               A U-VALUE OF 1.5 TO SIMULATE CONVECTIVE HEAT TRANSFER BETWEEN
```

```
* 270 * $                THEM.  INFILTRATION IS ALSO ADDED AT .25 AIR CHANGES/HR.
* 271 *
* 272 * $ LIGHTING FIXTURES ARE RECESSED FLUORESCENT WITH 20% OF THE HEAT FROM LIGHTING
* 273 * $                GOING TO THE CEILING PLENUM AND THEREFORE INTO THE RETURN AIR.
* 274 *
* 275 *                         $ HVAC SYSTEM DESCRIPTION
* 276 *
* 277 * $ DESIGN TEMPS  COOLING 78F - HEATING 70F.
* 278 * $ SYSTEM TYPE   A SINGLE VARIABLE AIR VOLUME SYSTEM SERVES THE ENTIRE BUILDING.
* 279 * $               THE SYSTEM HAS A DRYBULB CONTROLLED ECONOMIZER WITH A LIMIT
* 280 * $               TEMP OF 65F, VARIABLE SPEED FAN MOTOR, AND VAV BOXES WITH
* 281 * $               A MINIMUM STOP OF 30%.  THE TEMPERATURE OF THE SUPPLY AIR IS
* 282 * $               RESET BY OUTSIDE AIR - 60F AT FULL COOLING TO 65F IN WINTER.
* 283 * $               MINIMUM VENTILATION AIR IS 20 CFM/PERSON.  THE SYSTEM OPERATES
* 284 * $               FROM 8AM TO 6PM WEEKDAYS AND IS OFF ON WEEKENDS.  THERE IS A
* 285 * $               NIGHT LOW LIMIT SETPOINT OF 55F TO PREVENT FREEZING. THE FAN IS
* 286 * $               ALLOWED TO START AT 6AM WHEN NECESSARY FOR BLDG PICK-UP, BUT
* 287 * $               IS DELAYED AS LONG AS POSSIBLE (I.E., OPTIMUM START).  HEATING
* 288 * $               AND COOLING ARE NOT ALLOWED TO OPERATE SIMULTANEOUSLY.
* 289 *
* 290 * $ HVAC PLANT    GAS FIRED HOT WATER GENERATOR  PRESIZED AT .15 MBTUH.
* 291 * $               RECIPROCATING AIR COOLED CHILLER  PRESIZED AT .18 MBTUH.
* 292 *
* 293 * $ UTILITIES     NATURAL GAS AT 1.50 DOLLARS PER THERM.
* 294 * $               ELECTRICITY HAS A TIME-OF-DAY CHARGE AS FOLLOWS:
* 295 * $                       OFF-PEAK 5 CENTS/KWH  NIGHTS AND WEEKENDS
* 296 * $                       SHOULDER 6 CENTS/KWH  8AM TO 12 NOON AND FROM
* 297 * $                                             6PM TO 10 PM WEEKDAYS
* 298 * $                                             8AM TO 5PM SATURDAYS
* 299 * $                       ON-PEAK  7 CENTS/KWH  1PM TO 5PM WEEKDAYS
* 300 *
* 301 *                       $ CONSTRUCTIONS AND GLASS-TYPES
* 302 *
* 303 * WA-1-2=LAYERS   MATERIAL=(WD01,PW03,IN02,GP01)  ..
* 304 * RB-1-1=LAYERS   MATERIAL=(RG01,BR01,IN22,WD01)  I-F-R=.76  ..
* 305 * WALL-1         =CONSTRUCTION       LAYERS=WA-1-2  ..
* 306 * ROOF-1         =CONSTRUCTION       LAYERS=RB-1-1  ..
* 307 * CLNG-1         =CONSTRUCTION       U = 0.27  ..              $CEILING
* 308 * SB-U           =CONSTRUCTION       U = 1.5   ..              $PARTITION
* 309 * FLOOR-1        =CONSTRUCTION       U = 0.05  ..
* 310 * W-1            =GLASS-TYPE         GLASS-TYPE-CODE = 3  PANES = 2  ..
* 311 * DOORS          =GLASS-TYPE         GLASS-TYPE-CODE = 5   ..
* 312 *
* 313 *                       $ OCCUPANCY SCHEDULE
* 314 *
* 315 * OC-1           =DAY-SCHEDULE       (1,8) (0.0)
* 316 *                                     (9,11) (1.0)
* 317 *                                     (12,14) (0.8,0.4,0.8)
* 318 *                                     (15,18) (1.0)
* 319 *                                     (19,21) (0.5,0.1,0.1)
* 320 *                                     (22,24) (0.0)  ..
* 321 *
* 322 * OC-2           =DAY-SCHEDULE       (1,24) (0.0)  ..
* 323 *
* 324 * OC-WEEK        =WEEK-SCHEDULE      (WD) OC-1 (WEH) OC-2  ..
* 325 *
* 326 * OCCUPY-1       =SCHEDULE           THRU DEC 31 OC-WEEK  ..
* 327 *
* 328 *                       $ LIGHTING SCHEDULE
* 329 *
* 330 * LT-1           =DAY-SCHEDULE       (1,8) (0.05)
* 331 *                                     (9,14) (0.9,0.95,1.0,0.95,0.8,0.9)
* 332 *                                     (15,18) (1.0)
```

```
* 333 *                                  (19,21) (0.6,0.2,0.2)
* 334 *                                  (22,24) (0.05)  ..
* 335 *
* 336 * LT-2          =DAY-SCHEDULE       (1,24) (0.05)  ..
* 337 *
* 338 * LT-WEEK       =WEEK-SCHEDULE      (MON,FRI) LT-1   (WEH) LT-2  ..
* 339 *
* 340 * LIGHTS-1      =SCHEDULE           THRU DEC 31 LT-WEEK  ..
* 341 *
* 342 *                      $ OFFICE EQUIPMENT SCHEDULE
* 343 *
* 344 * EQ-1          =DAY-SCHEDULE       (1,8) (0.02)
* 345 *                                  (9,14) (0.8)
* 346 *                                  (15,20) (0.8,0.7,0.5,0.5,0.3,0.3)
* 347 *                                  (21,24) (0.02)  ..
* 348 *
* 349 * EQ-2          =DAY-SCHEDULE       (1,24) (0.02)  ..
* 350 *
* 351 * EQ-WEEK       =WEEK-SCHEDULE      (MON,FRI) EQ-1   (WEH) EQ-2  ..
* 352 *
* 353 * EQUIP-1       =SCHEDULE           THRU DEC 31 EQ-WEEK  ..
* 354 *
* 355 *                      $ INFILTRATION SCHEDULE
* 356 *
* 357 * INFIL-SCH     =SCHEDULE           THRU MAR 31 (ALL) (1,24) (1)
* 358 *                                  THRU OCT 31 (ALL) (1,24) (0)
* 359 *                                  THRU DEC 31 (ALL) (1,24) (1)  ..
* 360 *
* 361 *                      $ SET DEFAULT VALUES
* 362 *
* 363 *                SET-DEFAULT FOR SPACE FLOOR-WEIGHT=70  ..
* 364 *
* 365 *                SET-DEFAULT FOR WINDOW HEIGHT=4.0 GLASS-TYPE=W-1  Y=3  ..
* 366 *
* 367 *                      $ GENERAL SPACE DEFINITION
* 368 *
* 369 * OFFICE        =SPACE-CONDITIONS
* 370 *                                  PEOPLE-SCHEDULE      =OCCUPY-1
* 371 *                                  NUMBER-OF-PEOPLE     =50
* 372 *                                  PEOPLE-HEAT-GAIN     =400
* 373 *                                  LIGHTING-SCHEDULE    =LIGHTS-1
* 374 *                                  LIGHTING-TYPE        =REC-FLUOR-RV
* 375 *                                  LIGHT-TO-SPACE       =.80
* 376 *                                  LIGHTING-W/SQFT      =1.5
* 377 *                                  EQUIP-SCHEDULE       =EQUIP-1
* 378 *                                  EQUIPMENT-W/SQFT     =1
* 379 *                                  INF-METHOD           =AIR-CHANGE
* 380 *                                  AIR-CHANGES/HR       =0.25
* 381 *                                  INF-SCHEDULE         =INFIL-SCH  ..
* 382 *
* 383 *                      $ SPECIFIC SPACE DETAILS
* 384 *
* 385 * PLENUM-1      =SPACE              ZONE-TYPE=PLENUM
* 386 *                                  VOLUME=10000          FLOOR-WEIGHT=5
* 387 *                                  AREA=5000             Z=8  ..
* 388 *
* 389 *     WALL-1PF  =EXTERIOR-WALL      HEIGHT = 2            WIDTH = 100
* 390 *                                  AZIMUTH = 180
* 391 *                                  CONSTRUCTION = WALL-1   ..
* 392 *
* 393 *     WALL-1PR  =EXTERIOR-WALL      HEIGHT = 2            WIDTH =  50
* 394 *                                  AZIMUTH =  90         X = 100
* 395 *                                  CONSTRUCTION = WALL-1   ..
```

```
* 396 *
* 397 *     WALL-1PB    =EXTERIOR-WALL      HEIGHT = 2              WIDTH = 100
* 398 *                                     AZIMUTH = 0             X = 100
* 399 *                                     Y = 50
* 400 *                                     CONSTRUCTION = WALL-1   ..
* 401 *
* 402 *     WALL-1PL    =EXTERIOR-WALL      HEIGHT = 2              WIDTH =  50
* 403 *                                     AZIMUTH = 270           Y = 50
* 404 *                                     CONSTRUCTION = WALL-1   ..
* 405 *
* 406 *     TOP-1       =ROOF               HEIGHT=50               WIDTH=100
* 407 *                                     X=0   Y=0   Z=2         AZIMUTH = 180
* 408 *                                     TILT=0                  GND-REFLECTANCE=0
* 409 *                                     CONSTRUCTION = ROOF-1   ..
* 410 *
* 411 * SPACE1-1        =SPACE              SPACE-CONDITIONS = OFFICE
* 412 *                                     AREA = 1056             VOLUME = 8448
* 413 *                                     NUMBER-OF-PEOPLE = 11   ..
* 414 *
* 415 *     FRONT-1     =EXTERIOR-WALL      HEIGHT = 8              WIDTH = 100
* 416 *                                     X=0   Y=0   Z=0         AZIMUTH = 180
* 417 *                                     CONSTRUCTION = WALL-1   ..
* 418 *
* 419 *       WF-1      =WINDOW             WIDTH = 45              X = 10  ..
* 420 *       DF-1      =WINDOW             WIDTH = 8               HEIGHT = 8
* 421 *                                     X = 70                  Y = 0
* 422 *                                     GLASS-TYPE = DOORS
* 423 *                                     OVERHANG-A=1            OVERHANG-B=.5
* 424 *                                     OVERHANG-W=10           OVERHANG-D=4  ..
* 425 *
* 426 *     C1-1        =INTERIOR-WALL      AREA = 1056             NEXT-TO  PLENUM-1
* 427 *                                     CONSTRUCTION = CLNG-1   ..
* 428 *
* 429 *     F1-1        =UNDERGROUND-FLOOR  AREA = 1056
* 430 *                                     CONSTRUCTION = FLOOR-1  ..
* 431 *
* 432 *     SB12        =INTERIOR-WALL      AREA = 135.76           NEXT-TO  SPACE2-1
* 433 *                                     CONSTRUCTION = SB-U     ..
* 434 *
* 435 *     SB14        =INTERIOR-WALL      LIKE SB12               NEXT-TO  SPACE4-1   ..
* 436 *     SB15        =INTERIOR-WALL      AREA = 608              NEXT-TO  SPACE5-1
* 437 *                                     CONSTRUCTION = SB-U     ..
* 438 *
* 439 * SPACE2-1        =SPACE              SPACE-CONDITIONS = OFFICE
* 440 *                                     AREA  = 456             VOLUME = 3648
* 441 *                                     NUMBER-OF-PEOPLE =  5   ..
* 442 *
* 443 *     RIGHT-1     =EXTERIOR-WALL      HEIGHT = 8              WIDTH =  50
* 444 *                                     X=100  Y=0   Z=0        AZIMUTH =  90
* 445 *                                     CONSTRUCTION = WALL-1   ..
* 446 *
* 447 *       WR-1      =WINDOW             WIDTH = 25              X = 12.5  ..
* 448 *
* 449 *     C2-1        =INTERIOR-WALL      AREA =  456             NEXT-TO  PLENUM-1
* 450 *                                     CONSTRUCTION = CLNG-1   ..
* 451 *
* 452 *     F2-1        =UNDERGROUND-FLOOR  AREA = 456
* 453 *                                     CONSTRUCTION = FLOOR-1  ..
* 454 *
* 455 *     SB23        =INTERIOR-WALL      AREA = 135.76           NEXT-TO  SPACE3-1
* 456 *                                     CONSTRUCTION = SB-U     ..
* 457 *
* 458 *     SB25        =INTERIOR-WALL      AREA = 208              NEXT-TO  SPACE5-1
```

```
* 459 *                                  CONSTRUCTION = SB-U   ..
* 460 *
* 461 * SPACE3-1       =SPACE            SPACE-CONDITIONS = OFFICE
* 462 *                                  AREA  =   1056        VOLUME = 8448
* 463 *                                  NUMBER-OF-PEOPLE   =  11   ..
* 464 *
* 465 *     BACK-1     =EXTERIOR-WALL    HEIGHT = 8            WIDTH = 100
* 466 *                                  X=100  Y=50  Z=0      AZIMUTH =   0
* 467 *                                  CONSTRUCTION = WALL-1   ..
* 468 *
* 469 *       WB-1     =WINDOW           WIDTH = 45            X = 10  ..
* 470 *       DB-1     =WINDOW           WIDTH = 7             HEIGHT = 7
* 471 *                                  X = 70                Y = 0
* 472 *                                  GLASS-TYPE=DOORS   ..
* 473 *
* 474 *     C3-1       =INTERIOR-WALL    AREA = 1056           NEXT-TO  PLENUM-1
* 475 *                                  CONSTRUCTION = CLNG-1   ..
* 476 *
* 477 *     F3-1       =UNDERGROUND-FLOOR AREA = 1056
* 478 *                                  CONSTRUCTION = FLOOR-1   ..
* 479 *
* 480 *     SB34       =INTERIOR-WALL    AREA = 135.8          NEXT-TO  SPACE4-1
* 481 *                                  CONSTRUCTION = SB-U   ..
* 482 *
* 483 *     SB35       =INTERIOR-WALL    AREA = 608            NEXT-TO  SPACE5-1
* 484 *                                  CONSTRUCTION = SB-U   ..
* 485 *
* 486 * SPACE4-1       =SPACE            SPACE-CONDITIONS = OFFICE
* 487 *                                  AREA = 456            VOLUME = 3648
* 488 *                                  NUMBER-OF-PEOPLE   =  5   ..
* 489 *
* 490 *     LEFT-1     =EXTERIOR-WALL    HEIGHT = 8            WIDTH = 50
* 491 *                                  X=0   Y=50  Z=0       AZIMUTH = 270
* 492 *                                  CONSTRUCTION = WALL-1   ..
* 493 *
* 494 *       WL-1     =WINDOW           WIDTH = 25            X = 12.5  ..
* 495 *
* 496 *     C4-1       =INTERIOR-WALL    AREA =  456           NEXT-TO  PLENUM-1
* 497 *                                  CONSTRUCTION = CLNG-1   ..
* 498 *
* 499 *     F4-1       =UNDERGROUND-FLOOR AREA = 456
* 500 *                                  CONSTRUCTION = FLOOR-1   ..
* 501 *
* 502 *     SB45       =INTERIOR-WALL    AREA = 208            NEXT-TO  SPACE5-1
* 503 *                                  CONSTRUCTION = SB-U   ..
* 504 *
* 505 * SPACE5-1       =SPACE            SPACE-CONDITIONS = OFFICE
* 506 *                                  AREA  =   1976        VOLUME =15808
* 507 *                                  NUMBER-OF-PEOPLE   =  20   ..
* 508 *
* 509 *     C5-1       =INTERIOR-WALL    AREA = 1976           NEXT-TO  PLENUM-1
* 510 *                                  CONSTRUCTION = CLNG-1   ..
* 511 *
* 512 *     F5-1       =UNDERGROUND-FLOOR AREA = 1976
* 513 *                                  CONSTRUCTION = FLOOR-1   ..
* 514 *
* 515 *                    $ LOADS HOURLY REPORT
* 516 *
* 517 *   HR-SCH-1     =SCHEDULE       THRU AUG 4  (ALL)(1,24)(0)
* 518 *                                THRU AUG 5  (ALL)(1,24)(1)
* 519 *                                THRU DEC 31 (ALL)(1,24)(0) ..
* 520 *
* 521 *     LRB-1      =REPORT-BLOCK     VARIABLE-TYPE=GLOBAL
```

```
* 522 *                 VARIABLE-LIST=(4,17,15) .. $ dbt, wind speed, hor. solar $
* 523 *
* 524 *     LRB-2      =REPORT-BLOCK        VARIABLE-TYPE=BUILDING
* 525 *                 VARIABLE-LIST=(19) .. $ building cooling load $
* 526 *
* 527 *     LDS-REP-1  =HOURLY-REPORT      REPORT-SCHEDULE=HR-SCH-1
* 528 *                 REPORT-BLOCK=(LRB-1,LRB-2) ..
* 529 *
* 530 * END  ..
```

SIMPLE STRUCTURE RUN 3, CHICAGO DIVIDE INTO ZONES; ADD PLENUM Thu Nov 4 16:29:40 1993LDL RUN 3
DESIGN-DAY SIZING OF VAV SYSTEM SHOW ALL REPORTS
REPORT- LV-K WEIGHTING FACTOR SUMMARY

SP NAME-- WF NAME--	PLENUM-1	SPACE1-1	SPACE2-1	SPACE3-1	SPACE4-1	SPACE5-1
SOLAR						
V0	0.50123	0.19700	0.19700	0.19700	0.19700	0.19700
V1	0.19470	-0.06700	-0.06700	-0.06700	-0.06700	-0.06700
V2	0.00000	0.00000	0.00000	0.00000	0.00000	0.00000
W1	0.30408	0.87000	0.87000	0.87000	0.87000	0.87000
W2	0.00000	0.00000	0.00000	0.00000	0.00000	0.00000
GENERAL LIGHTING						
V0	0.70580	0.59000	0.59000	0.59000	0.59000	0.59000
V1	-0.00988	-0.46000	-0.46000	-0.46000	-0.46000	-0.46000
V2	0.00000	0.00000	0.00000	0.00000	0.00000	0.00000
W1	0.30408	0.87000	0.87000	0.87000	0.87000	0.87000
W2	0.00000	0.00000	0.00000	0.00000	0.00000	0.00000
TASK LIGHTING						
V0	0.68697	0.50000	0.50000	0.50000	0.50000	0.50000
V1	0.00895	-0.37000	-0.37000	-0.37000	-0.37000	-0.37000
V2	0.00000	0.00000	0.00000	0.00000	0.00000	0.00000
W1	0.30408	0.87000	0.87000	0.87000	0.87000	0.87000
W2	0.00000	0.00000	0.00000	0.00000	0.00000	0.00000
PEOPLE-EQUIPMENT						
V0	0.80413	0.68100	0.68100	0.68100	0.68100	0.68100
V1	-0.10821	-0.55100	-0.55100	-0.55100	-0.55100	-0.55100
V2	0.00000	0.00000	0.00000	0.00000	0.00000	0.00000
W1	0.30408	0.87000	0.87000	0.87000	0.87000	0.87000
W2	0.00000	0.00000	0.00000	0.00000	0.00000	0.00000
CONDUCTION						
V0	0.80413	0.68100	0.68100	0.68100	0.68100	0.68100
V1	-0.10821	-0.55100	-0.55100	-0.55100	-0.55100	-0.55100
V2	0.00000	0.00000	0.00000	0.00000	0.00000	0.00000
W1	0.30408	0.87000	0.87000	0.87000	0.87000	0.87000
W2	0.00000	0.00000	0.00000	0.00000	0.00000	0.00000
AIR TEMP (BTU/HR-SQFT-F)						
G0*	1.11200	1.81000	1.81000	1.81000	1.81000	1.81000
G1*	-1.12493	-1.89000	-1.89000	-1.89000	-1.89000	-1.89000
G2*	0.01293	0.08000	0.08000	0.08000	0.08000	0.08000
G3*	0.00000	0.00000	0.00000	0.00000	0.00000	0.00000
P1	-0.30408	-0.87000	-0.87000	-0.87000	-0.87000	-0.87000
P2	0.00000	0.00000	0.00000	0.00000	0.00000	0.00000

° 531 ° COMPUTE LOADS ..
° 532 ° INPUT SYSTEMS ..

```
* 533 *
* 534 *                SYSTEMS-REPORT  SUMMARY=(ALL-SUMMARY)  ..
* 535 *
* 536 *                $ SYSTEMS SCHEDULES
* 537 *
* 538 * FAN-1           =DAY-SCHEDULE       (1,6)(0)(7,8)(-999)(9,18)(1)(19,24)(0)  ..
* 539 * FAN-2           =DAY-SCHEDULE       (1,24) (0)   ..
* 540 * FAN-SCHED       =SCHEDULE           THRU DEC 31 (WD) FAN-1 (WEH) FAN-2  ..
* 541 *
* 542 * HEAT-1       =DAY-SCHEDULE    (1,8) (55)   (9,18) (70)  (19,24) (55)  ..
* 543 * HEAT-2       =DAY-SCHEDULE    (1,24) (55)   ..
* 544 * HEAT-WEEK    =WEEK-SCHEDULE   (MON,FRI)  HEAT-1   (WEH)  HEAT-2   ..
* 545 * HEAT-SCHED   =SCHEDULE        THRU DEC 31   HEAT-WEEK   ..
* 546 * COOLOFF      =SCHEDULE        THRU DEC 31 (ALL) (1,24) (60)  ..
* 547 * HEATOFF      =SCHEDULE        THRU DEC 31 (ALL) (1,24) (60)  ..
* 548 *
* 549 * COOL-1       =DAY-SCHEDULE    (1,8) (99)  (9,18) (78)  (19,24) (99)  ..
* 550 * COOL-2       =DAY-SCHEDULE    (1,24) (99)   ..
* 551 * COOL-WEEK    =WEEK-SCHEDULE   (MON,FRI)  COOL-1   (WEH)  COOL-2   ..
* 552 * COOL-SCHED   =SCHEDULE        THRU DEC 31   COOL-WEEK   ..
* 553 *
* 554 * R1 DAY-RESET-SCH  SUPPLY-HI 65  SUPPLY-LO 60
* 555 *                  OUTSIDE-LO 30  OUTSIDE-HI 75  ..
* 556 * SAT-RESET RESET-SCHEDULE  THRU DEC 31 (ALL) R1  ..
* 557 *
* 558 *
* 559 *                    $ SYSTEM DESCRIPTION
* 560 *
* 561 * ZAIR          =ZONE-AIR       OA-CFM/PER=20  ..
* 562 *
* 563 *  CONTROL      =ZONE-CONTROL   DESIGN-HEAT-T=70  DESIGN-COOL-T=76
* 564 *                               HEAT-TEMP-SCH= HEAT-SCHED
* 565 *                               COOL-TEMP-SCH= COOL-SCHED
* 566 *                               THERMOSTAT-TYPE=REVERSE-ACTION  ..
* 567 *
* 568 * SPACE1-1      =ZONE           ZONE-AIR=ZAIR  SIZING-OPTION= ADJUST-LOADS
* 569 *                               ZONE-CONTROL=CONTROL ..
* 570 * SPACE2-1      =ZONE           LIKE SPACE1-1   ..
* 571 * SPACE3-1      =ZONE           LIKE SPACE1-1   ..
* 572 * SPACE4-1      =ZONE           LIKE SPACE1-1   ..
* 573 * SPACE5-1      =ZONE           LIKE SPACE1-1  ..
* 574 *
* 575 * PLENUM-1      =ZONE           ZONE-TYPE=PLENUM  SIZING-OPTION= ADJUST-LOADS
* 576 *                               DESIGN-HEAT-T=50  DESIGN-COOL-T=95  ..
* 577 *
* 578 * S-CONT        =SYSTEM-CONTROL  COOLING-SCHEDULE= COOLOFF
* 579 *                                HEATING-SCHEDULE= HEATOFF
* 580 *                                HEAT-SET-T=65
* 581 *                                COOL-CONTROL=RESET
* 582 *                                COOL-RESET-SCH=SAT-RESET
* 583 *                                MIN-SUPPLY-T=60 ..
* 584 *
* 585 * S-FAN         =SYSTEM-FANS     FAN-SCHEDULE=FAN-SCHED  FAN-CONTROL=SPEED
* 586 *                                SUPPLY-STATIC=5.5  SUPPLY-EFF=.55
* 587 *                                NIGHT-CYCLE-CTRL=CYCLE-ON-ANY  ..
```

```
* 588 *
* 589 * S-TERM       =SYSTEM-TERMINAL REHEAT-DELTA-T=58
* 590 *                              MIN-CFM-RATIO=0.3   ..
* 591 *
* 592 * SYST-1       =SYSTEM          SYSTEM-TYPE=VAVS
* 593 *                              SYSTEM-CONTROL= S-CONT
* 594 *                              SYSTEM-FANS= S-FAN
* 595 *                              SYSTEM-TERMINAL= S-TERM
* 596 *                              ECONO-LIMIT-T=65
* 597 *                              RETURN-AIR-PATH=PLENUM-ZONES
* 598 *                              PLENUM-NAMES=(PLENUM-1)
* 599 *                              ZONE-NAMES=(SPACE5-1,SPACE1-1,SPACE2-1
* 600 *                                         SPACE3-1,SPACE4-1,PLENUM-1)   ..
* 601 *
* 602 *                     $ SYSTEMS HOURLY REPORT
* 603 *
* 604 *   HR-SCH-2     =SCHEDULE        THRU AUG 4  (ALL)(1,24)(0)
* 605 *                                 THRU AUG 5  (ALL)(1,24)(1)
* 606 *                                 THRU DEC 31 (ALL)(1,24)(0) ..
* 607 *
* 608 *     SRB-1      =REPORT-BLOCK       VARIABLE-TYPE=GLOBAL
* 609 *                 VARIABLE-LIST=(8,7) .. $ outside dbt, wbt $
* 610 *
* 611 *     SRB-2      =REPORT-BLOCK       VARIABLE-TYPE=SPACE1-1
* 612 *                 VARIABLE-LIST=(7,6,8) .. $ thermostat setpoint,
* 613 *                                          $ zone temp, extraction rate
* 614 *
* 615 *     SRB-3      =REPORT-BLOCK       VARIABLE-TYPE=SYST-1
* 616 *                 VARIABLE-LIST=(2,4,6) .. $ coil leaving air temp,
* 617 *                                          $ return air temp, coil load
* 618 *
* 619 *     SYSS-REP-1 =HOURLY-REPORT      REPORT-SCHEDULE=HR-SCH-2
* 620 *                 REPORT-BLOCK=(SRB-1,SRB-2,SRB-3) ..
* 621 *
* 622 * END   ..
* 623 * COMPUTE SYSTEMS   ..
* 624 *
* 625 * INPUT PLANT   ..
```

P D L P R O C E S S O R I N P U T D A T A

Thu Nov 4 16:29:40 1993PDL RUN 1

```
* 626 *
* 627 *              PLANT-REPORT  SUMMARY=(ALL-SUMMARY)
* 628 *                            VERIFICATION = (ALL-VERIFICATION)  ..
* 629 *
* 630 *                $ HOT-WATER GENERATOR
* 631 *
* 632 * HWG      =PLANT-EQUIPMENT  TYPE=HW-BOILER  SIZE=-999  ..
* 633 *
* 634 *  PLANT-PARAMETERS  HERM-REC-COND-TYPE=AIR  ..
* 635 *
* 636 *                $ AIR-COOLED RECIPROCATING CHILLER
* 637 *
* 638 * CHIL1 *     =PLANT-EQUIPMENT  TYPE=HERM-REC-CHLR  SIZE=-999 ..
* 639 *
* 640 *  PLANT-COSTS       PROJECT-LIFE=25  DISCOUNT-RATE=5  ..
* 641 *  ENERGY-RESOURCE  RESOURCE=ELECTRICITY  ..
* 642 *  ENERGY-RESOURCE  RESOURCE=NATURAL-GAS  ENERGY/UNIT=100000
* 643 *                   UNIT-NAME=THERMS   ..
* 644 *
* 645 *                $ PLANT HOURLY REPORT
* 646 *
* 647 *     HR-SCH-3   =SCHEDULE        THRU AUG 4  (ALL)(1,24)(0)
* 648 *                                 THRU AUG 5  (ALL)(1,24)(1)
* 649 *                                 THRU DEC 31 (ALL)(1,24)(0) ..
* 650 *
* 651 *     PRB-1      =REPORT-BLOCK       VARIABLE-TYPE=HERM-REC-CHLR
* 652 *                 VARIABLE-LIST=(1,10,16) .. $ chiller load,
* 653 *                                            $ part load ratio, EIR
* 654 *     PLT-REP-1  =HOURLY-REPORT   REPORT-SCHEDULE=HR-SCH-3
* 655 *                 REPORT-BLOCK=(PRB-1) ..
* 656 *
* 657 * END  ..
* 658 * COMPUTE PLANT   ..
* 659 * INPUT ECONOMICS  ..
```

```
* 660 * ECONOMICS-REPORT    S=(ALL-SUMMARY)
* 661 *                     V=(ALL-VERIFICATION)  ..
* 662 *
* 663 * ELEC-TARIFF=UTILITY-RATE   RESOURCE=ELECTRICITY
* 664 *                            ENERGY-CHG-SCH=ENERGY-SCH
* 665 *                            ESCALATION=7 ..
* 666 *
* 667 * ENERGY-SCH =SCHEDULE  THRU DEC 31 (WD) (1,8)(.05)          $OFF-PEAK
* 668 *                                       (9,12)(.06)         $SHOULDER
* 669 *                                       (13,17)(.07)        $PEAK
* 670 *                                       (18,22)(.06)        $SHOULDER
* 671 *                                       (23,24)(.05)        $OFF-PEAK
* 672 *
* 673 *                                 (SAT) (1,8)(.05)          $OFF-PEAK
* 674 *                                       (9,17)(.06)         $SHOULDER
* 675 *                                       (18,24)(.05)        $OFF-PEAK
* 676 *
* 677 *                             (SUN,HOL) (1,24)(.05)  ..     $OFF-PEAK
* 678 *
* 679 * GAS-RATE   =UTILITY-RATE   RESOURCE=NATURAL-GAS
* 680 *                            ENERGY-CHG = .6  ..
* 681 * END  ..
* 682 * COMPUTE ECONOMICS  ..
* 683 * INPUT LOADS  ..
```

DOE-2 UNITS TABLE

	ENGLISH	MULTIPLIED BY	GIVES	METRIC	MULTIPLIED BY	GIVES	ENGLISH
1			1.000000			1.000000	
2			1.000000			1.000000	
3	BTU		0.293000	WH		3.412969	BTU
4	BTU/HR		0.293000	WATT		3.412969	BTU/HR
5	BTU/LB-F		4183.830078	J/KG-K		0.000239	BTU/LB-F
6	BTU/HR-SQFT-F		5.674460	W/M2-K		0.176228	BTU/HR-SQFT-F
7	DEGREES		1.000000	DEGREES		1.000000	DEGREES
9	SQFT		0.092903	M2		10.763915	SQFT
10	CUFT		0.028317	M3		35.314724	CUFT
11	LB/HR		0.453592	KG/HR		2.204624	LB/HR
12	LB/CUFT		16.018459	KG/M3		0.062428	LB/CUFT
13	MPH		0.447040	M/S		2.236936	MPH
14	BTU/HR-F		0.527178	W/K		1.896893	BTU/HR-F
15	FT		0.304800	M		3.280840	FT
16	BTU/HR-FT-F		1.729600	W/M-K		0.578168	BTU/HR-FT-F
17	BTU/HR- SQFT		3.152480	WATT /M2		0.317211	BTU/HR- SQFT
18	IN		2.540000	CM		0.393701	IN
19	UNITS/IN		0.393700	UNITS/CM		2.540005	UNITS/IN
20	UNITS		1.000000	UNITS		1.000000	UNITS
21	LB		0.453592	KG		2.204624	LB
22	FRAC.OR MULT.		1.000000	FRAC.OR MULT.		1.000000	FRAC.OR MULT.
23	HOURS		1.000000	HRS		1.000000	HOURS
24	PERCENT-RH		1.000000	PERCENT-RH		1.000000	PERCENT-RH
25	CFM		1.699010	M3/H		0.588578	CFM
26	IN-WATER		25.400000	MM-WATER		0.039370	IN-WATER
27	LB/SQFT		4.882400	KG/M2		0.204817	LB/SQFT
28	KW		1.000000	KW		1.000000	KW
29	W/SQFT		10.763920	W/M2		0.092903	W/SQFT
30	THERMS		25.000000	THERMIES		0.040000	THERMS
31	KNOTS		0.514440	M/SEC		1.943861	KNOTS
32	HR-SQFT-F /BTU		0.176228	M2-K /W		5.674467	HR-SQFT-F /BTU
33	$DOLLARS		1.000000	$DOLLARS		1.000000	$DOLLARS
34	MBTU/HR		0.293000	MWATT		3.412969	MBTU/HR
35	YEARS		1.000000	YEARS		1.000000	YEARS
36	$/HR		1.000000	$/HR		1.000000	$/HR
37	HRS/YEARS		1.000000	HRS/YEARS		1.000000	HRS/YEARS
38	PERCENT		1.000000	PERCENT		1.000000	PERCENT
39	$/MONTH		1.000000	$/MONTH		1.000000	$/MONTH
40	GALLONS/MIN/TON		1.078000	LITERS/MIN/KW		0.927644	GALLONS/MIN/TON
41	BTU/LB		0.645683	WH/KG		1.548748	BTU/LB
42	LBS/SQIN-GAGE		68.947571	MBAR-GAGE		0.014504	LBS/SQIN-GAGE
43	$/UNIT		1.000000	$/UNIT		1.000000	$/UNIT
44	BTU/HR/PERSON		0.293000	W/PERSON		3.412969	BTU/HR/PERSON
45	LBS/LB		1.000000	KGS/KG		1.000000	LBS/LB
46	BTU/BTU		1.000000	KWH/KWH		1.000000	BTU/BTU
47	LBS/KW		0.453590	KG/KW		2.204634	LBS/KW
48	REV/MIN		1.000000	REV/MIN		1.000000	REV/MIN
49	KW/TON		1.000000	KW/TON		1.000000	KW/TON
50	MBTU		0.293000	MWH		3.412969	MBTU
51	GAL		3.785410	LITER		0.264172	GAL
52	GAL/MIN		3.785410	LITERS/MIN		0.264172	GAL/MIN
53	BTU/F		1897.800049	J/K		0.000527	BTU/F
54	UNITS/HR		1.000000	UNITS/HR		1.000000	UNITS/HR
55	$/UNIT-HR		1.000000	$/UNIT-HR		1.000000	$/UNIT-HR
56	KW/CFM		0.588500	KW/M3/HR		1.699235	KW/CFM

57	BTU/SQFT-F	20428.400391	J/M2-K	0.000049	BTU/SQFT-F
58	HR/HR	1.000000	HR/HR	1.000000	HR/HR
59	BTU/FT-F	6226.479980	J/M-K	0.000161	BTU/FT-F
60	R	0.555556	K	1.799999	R
61	INCH MER	33.863800	MBAR	0.029530	INCH MER
62	UNITS/GAL/MIN	0.264170	UNITS/LITER/MIN	3.785441	UNITS/GAL/MIN
63	(HR-SQFT-F/BTU)2	0.031056	(M2-K /W)2	32.199585	(HR-SQFT-F/BTU)2
64	KBTU/HR	0.293000	KW	3.412969	KBTU/HR
65	KBTU	0.293000	KWH	3.412969	KBTU
66	CFM	0.471900	L/S	2.119093	CFM
67	CFM/SQFT	18.288000	M3/H-M2	0.054681	CFM/SQFT
68	1/R	1.799900	1/K	0.555586	1/R
69	1/KNOT	1.943860	SEC/M	0.514440	1/KNOT
70	FOOTCANDLES	10.763910	LUX	0.092903	FOOTCANDLES
71	FOOTLAMBERT	3.426259	CANDELA/M2	0.291864	FOOTLAMBERT
72	LUMEN / WATT	1.000000	LUMEN / WATT	1.000000	LUMEN / WATT
73	KBTU/SQFT-YR	3.152480	KWH/M2-YR	0.317211	KBTU/SQFT-YR

PERIOD OF STUDY

STARTING DATE	ENDING DATE	NUMBER OF DAYS
3 AUG 1974	5 AUG 1974	3
5 JAN 1974	7 JAN 1974	3
6 APR 1974	8 APR 1974	3
1 JAN 1974	31 DEC 1974	365

SITE CHARACTERISTIC DATA

STATION NAME	LATITUDE (DEG)	LONGITUDE (DEG)	ALTITUDE (FT)	TIME ZONE	BUILDING AZIMUTH (DEG)
TRY CHICAGO	42.0	88.0	610.	6 CST	30.0

NUMBER OF SPACES 6 EXTERIOR 5 INTERIOR 1

SPACE	SPACE*FLOOR MULTIPLIER	SPACE TYPE	AZIMUTH	LIGHTING (WATT / SQFT)	PEOPLE	EQUIP (WATT / SQFT)	INFILTRATION METHOD	AIR CHANGES PER HOUR	AREA (SQFT)	VOLUME (CUFT)
PLENUM-1	1.0	EXT	0.0	0.00	0.0	0.00	NO-INFILT.	0.00	5000.00	10000.00
SPACE1-1	1.0	EXT	0.0	1.50	11.0	1.00	AIR-CHANGE	0.25	1056.00	8448.00
SPACE2-1	1.0	EXT	0.0	1.50	5.0	1.00	AIR-CHANGE	0.25	456.00	3648.00
SPACE3-1	1.0	EXT	0.0	1.50	11.0	1.00	AIR-CHANGE	0.25	1056.00	8448.00
SPACE4-1	1.0	EXT	0.0	1.50	5.0	1.00	AIR-CHANGE	0.25	456.00	3648.00
SPACE5-1	1.0	INT	0.0	1.50	20.0	1.00	AIR-CHANGE	0.25	1976.00	15808.00
BUILDING TOTALS					52.0				10000.00	50000.00

DATA FOR SPACE PLENUM-1

LOCATION OF ORIGIN IN BUILDING COORDINATES

XB (FT)	YB (FT)	ZB (FT)	SPACE AZIMUTH (DEG)	SPACE*FLOOR MULTIPLIER	HEIGHT (FT)	AREA (SQFT)	VOLUME (CUFT)
0.00	0.00	8.00	0.00	1.0	2.00	5000.00	10000.00

TOTAL NUMBER OF SURFACES	NUMBER OF EXTERIOR SURFACES	NUMBER OF INTERIOR SURFACES	NUMBER OF UNDERGROUND SURFACES	DAYLIGHTING	SUNSPACE
10	5	5	0	NO	NO

NUMBER OF SUBSURFACES

TOTAL	EXTERIOR WINDOWS	DOORS	INTERIOR WINDOWS
0	0	0	0

FLOOR WEIGHT (LB/SQFT)	CALCULATION TEMPERATURE (F)
5.0	70.0

INTERIOR SURFACES (U-VALUE INCLUDES BOTH AIR FILMS)

SURFACE	AREA (SQFT)	CONSTRUCTION	U-VALUE (BTU/HR-SQFT-F)	ADJACENT SPACE	SURFACE-TYPE
C1-1	1056.00	CLNG-1	0.270	SPACE1-1	QUICK STANDARD
C2-1	456.00	CLNG-1	0.270	SPACE2-1	QUICK STANDARD
C3-1	1056.00	CLNG-1	0.270	SPACE3-1	QUICK STANDARD
C4-1	456.00	CLNG-1	0.270	SPACE4-1	QUICK STANDARD
C5-1	1976.00	CLNG-1	0.270	SPACE5-1	QUICK STANDARD

EXTERIOR SURFACES (U-VALUE EXCLUDES OUTSIDE AIR FILM)

SURFACE	MULTIPLIER	AREA (SQFT)	WIDTH (FT)	HEIGHT (FT)	CONSTRUCTION	U-VALUE (BTU/HR-SQFT-F)	SURFACE TYPE
WALL-1PF	1.0	200.00	100.00	2.00	WALL-1	0.069	DELAYED
WALL-1PR	1.0	100.00	50.00	2.00	WALL-1	0.069	DELAYED
WALL-1PB	1.0	200.00	100.00	2.00	WALL-1	0.069	DELAYED
WALL-1PL	1.0	100.00	50.00	2.00	WALL-1	0.069	DELAYED
TOP-1	1.0	5000.00	100.00	50.00	ROOF-1	0.180	DELAYED

SURFACE	AZIMUTH (DEG)	TILT (DEG)	LOCATION OF ORIGIN IN BUILDING COORDINATES XB (FT)	YB (FT)	ZB (FT)	LOCATION OF ORIGIN IN SPACE COORDINATES X (FT)	Y (FT)	Z (FT)
WALL-1PF	180.0	90.0	0.00	0.00	8.00	0.00	0.00	0.00
WALL-1PR	90.0	90.0	100.00	0.00	8.00	100.00	0.00	0.00
WALL-1PB	0.0	90.0	100.00	50.00	8.00	100.00	50.00	0.00
WALL-1PL	270.0	90.0	0.00	50.00	8.00	0.00	50.00	0.00
TOP-1	180.0	0.0	0.00	0.00	10.00	0.00	0.00	2.00

DATA FOR SPACE SPACE1-1

LOCATION OF ORIGIN IN BUILDING COORDINATES XB (FT)	YB (FT)	ZB (FT)	SPACE AZIMUTH (DEG)	SPACE*FLOOR MULTIPLIER	HEIGHT (FT)	AREA (SQFT)	VOLUME (CUFT)
0.00	0.00	0.00	0.00	1.0	8.00	1056.00	8448.00

TOTAL NUMBER OF SURFACES	NUMBER OF EXTERIOR SURFACES	NUMBER OF INTERIOR SURFACES	NUMBER OF UNDERGROUND SURFACES	DAYLIGHTING	SUNSPACE
6	1	4	1	NO	NO

NUMBER OF SUBSURFACES

TOTAL	EXTERIOR WINDOWS	DOORS	INTERIOR WINDOWS
2	2	0	0

FLOOR WEIGHT (LB/SQFT)	CALCULATION TEMPERATURE (F)
70.0	70.0

INFILTRATION

SCHEDULE	INFILTRATION CALCULATION METHOD	FLOW RATE (CFM/SQFT)	AIR CHANGES PER HOUR	HEIGHT TO NEUTRAL ZONE (FT)
INFIL-SCH	AIR-CHANGE	0.00	0.25	0.0

PEOPLE

SCHEDULE	NUMBER	AREA PER PERSON (SQFT)	PEOPLE ACTIVITY (BTU/HR)	PEOPLE SENSIBLE (BTU/HR)	PEOPLE LATENT (BTU/HR)
OCCUPY-1	11.0	96.0	400.0	0.0	0.0

LIGHTING

SCHEDULE	LIGHTING TYPE	LOAD (WATTS/ SQFT)	LOAD (KW)	FRACTION OF LOAD TO SPACE
LIGHTS-1	REC-FLUOR-RV	1.50	0.00	0.80

ELECTRICAL EQUIPMENT

SCHEDULE	ELEC LOAD (WATTS/ SQFT)	ELEC LOAD (KW)	FRACTION OF LOAD TO SPACE SENSIBLE	LATENT
EQUIP-1	1.00	0.00	1.00	0.00

INTERIOR SURFACES (U-VALUE INCLUDES BOTH AIR FILMS)

SURFACE	AREA (SQFT)	CONSTRUCTION	U-VALUE (BTU/HR-SQFT-F)	ADJACENT SPACE	SURFACE-TYPE	
C1-1	1056.00	CLNG-1	0.270	PLENUM-1	QUICK	STANDARD
SB12	135.76	SB-U	1.500	SPACE2-1	QUICK	AIR
SB14	135.76	SB-U	1.500	SPACE4-1	QUICK	AIR
SB15	608.00	SB-U	1.500	SPACE5-1	QUICK	AIR

EXTERIOR SURFACES (U-VALUE EXCLUDES OUTSIDE AIR FILM)

SURFACE	MULTIPLIER	AREA (SQFT)	WIDTH (FT)	HEIGHT (FT)	CONSTRUCTION	U-VALUE (BTU/HR-SQFT-F)	SURFACE TYPE
FRONT-1	1.0	800.00	100.00	8.00	WALL-1	0.069	DELAYED

SURFACE	AZIMUTH (DEG)	TILT (DEG)	LOCATION OF ORIGIN IN BUILDING COORDINATES XB (FT)	YB (FT)	ZB (FT)	LOCATION OF ORIGIN IN SPACE COORDINATES X (FT)	Y (FT)	Z (FT)
FRONT-1	180.0	90.0	0.00	0.00	0.00	0.00	0.00	0.00

UNDERGROUND SURFACES (U-VALUE INCLUDES INSIDE AIR FILM)

SURFACE	MULTIPLIER	AREA (SQFT)	CONSTRUCTION	U-VALUE (BTU/HR-SQFT-F)
F1-1	1.0	1056.00	FLOOR-1	0.05

EXTERIOR WINDOWS (U-VALUE INCLUDES OUTSIDE AIR FILM)

WINDOW	MULTIPLIER	GLASS AREA (SQFT)	GLASS SHADING COEFF	NUMBER OF PANES	GLASS TYPE CODE	SET-BACK (FT)	GLASS WIDTH (FT)	GLASS HEIGHT (FT)	CENTER-OF-GLASS U-VALUE (BTU/HR-SQFT-F)	GLASS VISIBLE TRANS
WF-1	1.0	180.00	1.00	2	3	0.00	45.00	4.00	0.490	0.900
DF-1	1.0	64.00	1.00	1	5	0.00	8.00	8.00	1.021	0.900

WINDOW	LOCATED IN SURFACE	LOCATION OF ORIGIN IN BUILDING COORDINATES XB (FT)	YB (FT)	ZB (FT)	LOCATION OF ORIGIN IN SURFACE COORDINATES X (FT)	Y (FT)
WF-1	FRONT-1	10.00	0.00	3.00	10.00	3.00
DF-1	FRONT-1	70.00	0.00	0.00	70.00	0.00

NUMBER OF EXTERIOR SURFACES 9 RECTANGULAR 9 OTHER 0
(U-VALUE INCLUDES OUTSIDE AIR FILM; WINDOW INCLUDES FRAME, IF DEFINED)

SURFACE	SPACE	WINDOWS U-VALUE (BTU/HR-SQFT-F)	WINDOWS AREA (SQFT)	WALL U-VALUE (BTU/HR-SQFT-F)	WALL AREA (SQFT)	WALL+WINDOWS U-VALUE (BTU/HR-SQFT-F)	WALL+WINDOWS AREA (SQFT)	AZIMUTH
WALL-1PB	PLENUM-1	0.000	0.00	0.067	200.00	0.067	200.00	NORTH
BACK-1	SPACE3-1	0.565	229.00	0.067	571.00	0.210	800.00	NORTH
RIGHT-1	SPACE2-1	0.467	100.00	0.067	300.00	0.167	400.00	EAST
WALL-1PR	PLENUM-1	0.000	0.00	0.067	100.00	0.067	100.00	EAST
WALL-1PF	PLENUM-1	0.000	0.00	0.067	200.00	0.067	200.00	SOUTH
FRONT-1	SPACE1-1	0.587	244.00	0.067	556.00	0.226	800.00	SOUTH
WALL-1PL	PLENUM-1	0.000	0.00	0.067	100.00	0.067	100.00	WEST
LEFT-1	SPACE4-1	0.467	100.00	0.067	300.00	0.167	400.00	WEST
TOP-1	PLENUM-1	0.000	0.00	0.168	5000.00	0.168	5000.00	ROOF
F1-1	SPACE1-1	0.000	0.00	0.050	1056.00	0.050	1056.00	UNDERGRND
F2-1	SPACE2-1	0.000	0.00	0.050	456.00	0.050	456.00	UNDERGRND
F3-1	SPACE3-1	0.000	0.00	0.050	1056.00	0.050	1056.00	UNDERGRND
F4-1	SPACE4-1	0.000	0.00	0.050	456.00	0.050	456.00	UNDERGRND
F5-1	SPACE5-1	0.000	0.00	0.050	1976.00	0.050	1976.00	UNDERGRND

	AVERAGE U-VALUE/WINDOWS (BTU/HR-SQFT-F)	AVERAGE U-VALUE/WALLS (BTU/HR-SQFT-F)	AVERAGE U-VALUE WALLS+WINDOWS (BTU/HR-SQFT-F)	WINDOW AREA (SQFT)	WALL AREA (SQFT)	WINDOW+WALL AREA (SQFT)
NORTH	0.565	0.067	0.181	229.00	771.00	1000.00
EAST	0.467	0.067	0.147	100.00	400.00	500.00
SOUTH	0.587	0.067	0.194	244.00	756.00	1000.00
WEST	0.467	0.067	0.147	100.00	400.00	500.00
ROOF	0.000	0.168	0.168	0.00	5000.00	5000.00
ALL WALLS	0.544	0.067	0.174	673.00	2327.00	3000.00
WALLS+ROOFS	0.544	0.136	0.170	673.00	7327.00	8000.00
UNDERGRND	0.000	0.050	0.050	0.00	5000.00	5000.00
BUILDING	0.544	0.101	0.124	673.00	12327.00	13000.00

NUMBER OF UNDERGROUND SURFACES 5

SURFACE NAME	MULTIPLIER	AREA (SQFT)	CONSTRUCTION NAME	U-VALUE (BTU/HR-SQFT-F)
F1-1	1.0	1056.00	FLOOR-1	0.050
F2-1	1.0	456.00	FLOOR-1	0.050
F3-1	1.0	1056.00	FLOOR-1	0.050
F4-1	1.0	456.00	FLOOR-1	0.050
F5-1	1.0	1976.00	FLOOR-1	0.050

NUMBER OF INTERIOR SURFACES 13
(U-VALUE INCLUDES BOTH AIR FILMS)

SURFACE NAME	AREA (SQFT)	CONSTRUCTION NAME	SURFACE TYPE		U-VALUE (BTU/HR-SQFT-F)	ADJACENT SPACES SPACE-1	SPACE-2
C1-1	1056.00	CLNG-1	QUICK	STANDARD	0.270	SPACE1-1	PLENUM-1
SB12	135.76	SB-U	QUICK	AIR	1.500	SPACE1-1	SPACE2-1
SB14	135.76	SB-U	QUICK	AIR	1.500	SPACE1-1	SPACE4-1
SB15	608.00	SB-U	QUICK	AIR	1.500	SPACE1-1	SPACE5-1
C2-1	456.00	CLNG-1	QUICK	STANDARD	0.270	SPACE2-1	PLENUM-1
SB23	135.76	SB-U	QUICK	AIR	1.500	SPACE2-1	SPACE3-1
SB25	208.00	SB-U	QUICK	AIR	1.500	SPACE2-1	SPACE5-1
C3-1	1056.00	CLNG-1	QUICK	STANDARD	0.270	SPACE3-1	PLENUM-1
SB34	135.80	SB-U	QUICK	AIR	1.500	SPACE3-1	SPACE4-1
SB35	608.00	SB-U	QUICK	AIR	1.500	SPACE3-1	SPACE5-1
C4-1	456.00	CLNG-1	QUICK	STANDARD	0.270	SPACE4-1	PLENUM-1
SB45	208.00	SB-U	QUICK	AIR	1.500	SPACE4-1	SPACE5-1
C5-1	1976.00	CLNG-1	QUICK	STANDARD	0.270	SPACE5-1	PLENUM-1

NUMBER OF SCHEDULES 5 (NON DIMENSIONLESS SCHEDULES ARE GIVEN IN ENGLISH UNITS)

SCHEDULE OCCUPY-1

THROUGH 31 12

FOR DAYS SUN SAT HOL

HOUR	1	2	3	4	5	6	7	8	9	10	11	12	13	14	15	16	17	18	19	20	21	22	23	24
	0.00	0.00	0.00	0.00	0.00	0.00	0.00	0.00	0.00	0.00	0.00	0.00	0.00	0.00	0.00	0.00	0.00	0.00	0.00	0.00	0.00	0.00	0.00	0.00

FOR DAYS MON TUE WED THU FRI

HOUR	1	2	3	4	5	6	7	8	9	10	11	12	13	14	15	16	17	18	19	20	21	22	23	24
	0.00	0.00	0.00	0.00	0.00	0.00	0.00	0.00	1.00	1.00	1.00	0.80	0.40	0.80	1.00	1.00	1.00	1.00	0.50	0.10	0.10	0.00	0.00	0.00

SCHEDULE LIGHTS-1

THROUGH 31 12

FOR DAYS SUN SAT HOL

HOUR	1	2	3	4	5	6	7	8	9	10	11	12	13	14	15	16	17	18	19	20	21	22	23	24
	0.05	0.05	0.05	0.05	0.05	0.05	0.05	0.05	0.05	0.05	0.05	0.05	0.05	0.05	0.05	0.05	0.05	0.05	0.05	0.05	0.05	0.05	0.05	0.05

FOR DAYS MON TUE WED THU FRI

HOUR	1	2	3	4	5	6	7	8	9	10	11	12	13	14	15	16	17	18	19	20	21	22	23	24
	0.05	0.05	0.05	0.05	0.05	0.05	0.05	0.05	0.90	0.95	1.00	0.95	0.80	0.90	1.00	1.00	1.00	1.00	0.60	0.20	0.20	0.05	0.05	0.05

SCHEDULE EQUIP-1

THROUGH 31 12

FOR DAYS SUN SAT HOL

HOUR	1	2	3	4	5	6	7	8	9	10	11	12	13	14	15	16	17	18	19	20	21	22	23	24
	0.02	0.02	0.02	0.02	0.02	0.02	0.02	0.02	0.02	0.02	0.02	0.02	0.02	0.02	0.02	0.02	0.02	0.02	0.02	0.02	0.02	0.02	0.02	0.02

FOR DAYS MON TUE WED THU FRI

HOUR	1	2	3	4	5	6	7	8	9	10	11	12	13	14	15	16	17	18	19	20	21	22	23	24
	0.02	0.02	0.02	0.02	0.02	0.02	0.02	0.02	0.80	0.80	0.80	0.80	0.80	0.80	0.80	0.70	0.50	0.50	0.30	0.30	0.02	0.02	0.02	0.02

SCHEDULE INFIL-SCH

THROUGH 31 3

FOR DAYS SUN MON TUE WED THU FRI SAT HOL

HOUR	1	2	3	4	5	6	7	8	9	10	11	12	13	14	15	16	17	18	19	20	21	22	23	24
	1.00	1.00	1.00	1.00	1.00	1.00	1.00	1.00	1.00	1.00	1.00	1.00	1.00	1.00	1.00	1.00	1.00	1.00	1.00	1.00	1.00	1.00	1.00	1.00

THROUGH 31 10

FOR DAYS SUN MON TUE WED THU FRI SAT HOL

HOUR	1	2	3	4	5	6	7	8	9	10	11	12	13	14	15	16	17	18	19	20	21	22	23	24
	0.00	0.00	0.00	0.00	0.00	0.00	0.00	0.00	0.00	0.00	0.00	0.00	0.00	0.00	0.00	0.00	0.00	0.00	0.00	0.00	0.00	0.00	0.00	0.00

THROUGH 31 12

FOR DAYS SUN MON TUE WED THU FRI SAT HOL

HOUR	1	2	3	4	5	6	7	8	9	10	11	12	13	14	15	16	17	18	19	20	21	22	23	24
	1.00	1.00	1.00	1.00	1.00	1.00	1.00	1.00	1.00	1.00	1.00	1.00	1.00	1.00	1.00	1.00	1.00	1.00	1.00	1.00	1.00	1.00	1.00	1.00

SCHEDULE HR-SCH-1

THROUGH 4 8

FOR DAYS SUN MON TUE WED THU FRI SAT HOL

HOUR	1	2	3	4	5	6	7	8	9	10	11	12	13	14	15	16	17	18	19	20	21	22	23	24
	0.00	0.00	0.00	0.00	0.00	0.00	0.00	0.00	0.00	0.00	0.00	0.00	0.00	0.00	0.00	0.00	0.00	0.00	0.00	0.00	0.00	0.00	0.00	0.00

THROUGH 5 8

FOR DAYS SUN MON TUE WED THU FRI SAT HOL

HOUR	1	2	3	4	5	6	7	8	9	10	11	12	13	14	15	16	17	18	19	20	21	22	23	24
	1.00	1.00	1.00	1.00	1.00	1.00	1.00	1.00	1.00	1.00	1.00	1.00	1.00	1.00	1.00	1.00	1.00	1.00	1.00	1.00	1.00	1.00	1.00	1.00

THROUGH 31 12

FOR DAYS SUN MON TUE WED THU FRI SAT HOL

HOUR	1	2	3	4	5	6	7	8	9	10	11	12	13	14	15	16	17	18	19	20	21	22	23	24
	0.00	0.00	0.00	0.00	0.00	0.00	0.00	0.00	0.00	0.00	0.00	0.00	0.00	0.00	0.00	0.00	0.00	0.00	0.00	0.00	0.00	0.00	0.00	0.00

NUMBER OF WINDOWS 6 RECTANGULAR 6 OTHER 0

RECTANGULAR WINDOWS (U-VALUES INCLUDE OUTSIDE AIR FILM)

WINDOW NAME	MULTIPLIER	GLASS AREA (SQFT)	GLASS HEIGHT (FT)	GLASS WIDTH (FT)	LOCATION OF ORIGIN IN SURFACE COORDINATES X (FT)	Y (FT)	FRAME AREA (SQFT)	FRAME U-VALUE (BTU/HR-SQFT-F)
WF-1	1.0	180.00	4.00	45.00	10.00	3.00	0.00	0.384
DF-1	1.0	64.00	8.00	8.00	70.00	0.00	0.00	0.384
WR-1	1.0	100.00	4.00	25.00	12.50	3.00	0.00	0.384
WB-1	1.0	180.00	4.00	45.00	10.00	3.00	0.00	0.384
DB-1	1.0	49.00	7.00	7.00	70.00	0.00	0.00	0.384
WL-1	1.0	100.00	4.00	25.00	12.50	3.00	0.00	0.384

WINDOW NAME	SETBACK (FT)	X-DIVISIONS	GLASS SHADING COEFF	NUMBER OF PANES	GLASS TYPE CODE	INFILTRATION FLOW COEFF	CENTER-OF-GLASS U-VALUE (BTU/HR-SQFT-F)	GLASS VISIBLE TRANS
WF-1	0.00	10	1.00	2	3	0.0	0.490	0.900
DF-1	0.00	10	1.00	1	5	0.0	1.021	0.900
WR-1	0.00	10	1.00	2	3	0.0	0.490	0.900
WB-1	0.00	10	1.00	2	3	0.0	0.490	0.900
DB-1	0.00	10	1.00	1	5	0.0	1.021	0.900
WL-1	0.00	10	1.00	2	3	0.0	0.490	0.900

NUMBER OF CONSTRUCTIONS 5 DELAYED 2 QUICK 3

CONSTRUCTION NAME	U-VALUE (BTU/HR-SQFT-F)	SURFACE ABSORPTANCE	SURFACE ROUGHNESS INDEX	SURFACE TYPE	NUMBER OF RESPONSE FACTORS
WALL-1	0.069	0.70	3	DELAYED	9
ROOF-1	0.180	0.70	3	DELAYED	5
CLNG-1	0.270	0.70	3	QUICK	0
SB-U	1.500	0.70	3	QUICK	0
FLOOR-1	0.050	0.70	3	QUICK	0

NUMBER OF BUILDING SHADES 0 RECTANGULAR 0 OTHER 0

SIMPLE STRUCTURE RUN 3, CHICAGO DIVIDE INTO ZONES; ADD PLENUM DOE-2.1E-001 Thu Nov 4 16:29:40 1993LDL RUN 3
DESIGN-DAY SIZING OF VAV SYSTEM SHOW ALL REPORTS
REPORT- LS-A SPACE PEAK LOADS SUMMARY DESIGN DAY WEATHER FILE- TRY CHICAGO

SPACE NAME	MULTIPLIER SPACE	MULTIPLIER FLOOR	COOLING LOAD (KBTU/HR)	TIME OF PEAK	DRY-BULB	WET-BULB	HEATING LOAD (KBTU/HR)	TIME OF PEAK	DRY-BULB	WET-BULB
PLENUM-1	1.	1.	67.753	AUG 3 4 PM	91.F	73.F	-69.888	JAN 6 4 AM	-3.F	-3.F
SPACE1-1	1.	1.	28.011	APR 8 4 PM	65.F	51.F	-14.494	JAN 6 7 AM	-1.F	-1.F
SPACE2-1	1.	1.	13.094	AUG 5 12 NOON	81.F	68.F	-5.905	JAN 6 6 AM	-2.F	-2.F
SPACE3-1	1.	1.	17.076	AUG 5 4 PM	91.F	73.F	-15.758	JAN 6 4 AM	-3.F	-3.F
SPACE4-1	1.	1.	12.200	AUG 5 6 PM	90.F	73.F	-6.316	JAN 6 4 AM	-3.F	-3.F
SPACE5-1	1.	1.	14.500	AUG 5 3 PM	90.F	72.F	-6.675	JAN 7 2 AM	-4.F	-4.F
SUM			152.632				-119.037			
BUILDING PEAK			79.840	AUG 5 6 PM	90.F	73.F	-48.782	JAN 5 6 AM	-2.F	-2.F

SPACE PLENUM-1

MULTIPLIER 1.0 FLOOR MULTIPLIER 1.0

FLOOR AREA 5000 SQFT 465 M2
VOLUME 10000 CUFT 283 M3

	COOLING LOAD		HEATING LOAD	
TIME	AUG 3 4PM		JAN 6 4AM	
DRY-BULB TEMP	91F	33C	-3F	-20C
WET-BULB TEMP	73F	23C	-3F	-20C

	SENSIBLE (KBTU/H)	SENSIBLE (KW)	LATENT (KBTU/H)	LATENT (KW)	SENSIBLE (KBTU/H)	SENSIBLE (KW)
WALL CONDUCTION	1.614	0.473	0.000	0.000	-3.050	-0.894
ROOF CONDUCTION	66.138	19.379	0.000	0.000	-66.838	-19.584
WINDOW GLASS+FRM COND	0.000	0.000	0.000	0.000	0.000	0.000
WINDOW GLASS SOLAR	0.000	0.000	0.000	0.000	0.000	0.000
DOOR CONDUCTION	0.000	0.000	0.000	0.000	0.000	0.000
INTERNAL SURFACE COND	0.000	0.000	0.000	0.000	0.000	0.000
UNDERGROUND SURF COND	0.000	0.000	0.000	0.000	0.000	0.000
OCCUPANTS TO SPACE	0.000	0.000	0.000	0.000	0.000	0.000
LIGHT TO SPACE	0.000	0.000	0.000	0.000	0.000	0.000
EQUIPMENT TO SPACE	0.000	0.000	0.000	0.000	0.000	0.000
PROCESS TO SPACE	0.000	0.000	0.000	0.000	0.000	0.000
INFILTRATION	0.000	0.000	0.000	0.000	0.000	0.000
TOTAL	67.753	19.852	0.000	0.000	-69.888	-20.477
TOTAL LOAD	67.753 KBTU/H		19.852 KW		-69.888 KBTU/H	-20.477 KW
TOTAL LOAD / AREA	13.55BTU/H.SQFT		42.736 W / M2		13.978BTU/H.SQFT	44.083 W / M2

```
*****************************************************************
*                                                               *
*  NOTE  1)THE ABOVE LOADS EXCLUDE OUTSIDE VENTILATION AIR      *
*  ----      LOADS                                              *
*        2)TIMES GIVEN IN STANDARD TIME FOR THE LOCATION        *
*          IN CONSIDERATION                                     *
*                                                               *
*****************************************************************
```

SPACE SPACE1-1

MULTIPLIER 1.0 FLOOR MULTIPLIER 1.0

FLOOR AREA 1056 SQFT 98 M2
VOLUME 8448 CUFT 239 M3

	COOLING LOAD		HEATING LOAD	
TIME	APR 8 4PM		JAN 6 7AM	
DRY-BULB TEMP	65F	18C	-1F	-18C
WET-BULB TEMP	51F	11C	-1F	-18C

	SENSIBLE (KBTU/H)	SENSIBLE (KW)	LATENT (KBTU/H)	LATENT (KW)	SENSIBLE (KBTU/H)	SENSIBLE (KW)
WALL CONDUCTION	1.085	0.318	0.000	0.000	-2.707	-0.793
ROOF CONDUCTION	0.000	0.000	0.000	0.000	0.000	0.000
WINDOW GLASS+FRM COND	1.532	0.449	0.000	0.000	-9.880	-2.895
WINDOW GLASS SOLAR	18.397	5.390	0.000	0.000	1.547	0.453
DOOR CONDUCTION	0.000	0.000	0.000	0.000	0.000	0.000
INTERNAL SURFACE COND	0.000	0.000	0.000	0.000	0.000	0.000
UNDERGROUND SURF COND	-1.267	-0.371	0.000	0.000	-1.267	-0.371
OCCUPANTS TO SPACE	2.353	0.689	1.433	0.420	0.000	0.000
LIGHT TO SPACE	3.611	1.058	0.000	0.000	0.216	0.063
EQUIPMENT TO SPACE	2.300	0.674	0.000	0.000	0.072	0.021
PROCESS TO SPACE	0.000	0.000	0.000	0.000	0.000	0.000
INFILTRATION	0.000	0.000	0.000	0.000	-2.475	-0.725
TOTAL	28.011	8.207	1.433	0.420	-14.494	-4.247
TOTAL LOAD	29.444 KBTU/H		8.627 KW		-14.494 KBTU/H	-4.247 KW
TOTAL LOAD / AREA	27.88BTU/H.SQFT		87.937 W / M2		13.726BTU/H.SQFT	43.288 W / M2

```
*****************************************************************
*                                                               *
*  NOTE  1)THE ABOVE LOADS EXCLUDE OUTSIDE VENTILATION AIR      *
*  ----     LOADS                                               *
*        2)TIMES GIVEN IN STANDARD TIME FOR THE LOCATION        *
*          IN CONSIDERATION                                     *
*                                                               *
*****************************************************************
```

*** BUILDING ***

FLOOR AREA	5000	SQFT	465	SQMT
VOLUME	50000	CUFT	1416	CUMT

	COOLING LOAD		HEATING LOAD	
TIME	AUG 5 6PM		JAN 5 6AM	
DRY-BULB TEMP	90F	32C	-2F	-19C
WET-BULB TEMP	73F	23C	-2F	-19C

	SENSIBLE (KBTU/H)	SENSIBLE (KW)	LATENT (KBTU/H)	LATENT (KW)	SENSIBLE (KBTU/H)	SENSIBLE (KW)
WALL CONDUCTION	4.609	1.351	0.000	0.000	-8.525	-2.498
ROOF CONDUCTION	0.000	0.000	0.000	0.000	0.000	0.000
WINDOW GLASS+FRM COND	9.303	2.726	0.000	0.000	-26.257	-7.693
WINDOW GLASS SOLAR	29.972	8.782	0.000	0.000	2.532	0.742
DOOR CONDUCTION	0.000	0.000	0.000	0.000	0.000	0.000
INTERNAL SURFACE COND	0.000	0.000	0.000	0.000	0.000	0.000
UNDERGROUND SURF COND	-2.250	-0.659	0.000	0.000	-6.000	-1.758
OCCUPANTS TO SPACE	11.607	3.401	6.776	1.985	0.000	0.000
LIGHT TO SPACE	17.920	5.250	0.000	0.000	1.024	0.300
EQUIPMENT TO SPACE	8.679	2.543	0.000	0.000	0.341	0.100
PROCESS TO SPACE	0.000	0.000	0.000	0.000	0.000	0.000
INFILTRATION	0.000	0.000	0.000	0.000	-11.897	-3.486
TOTAL	79.840	23.393	6.776	1.985	-48.782	-14.293
TOTAL LOAD	86.616 KBTU/H		25.378 KW		-48.782 KBTU/H	-14.293 KW
TOTAL LOAD / AREA	17.32BTU/H.SQFT		54.634 W /SQMT		9.756BTU/H.SQFT	30.770 W /SQMT

```
*****************************************************************
*                                                               *
*  NOTE  1)THE ABOVE LOADS EXCLUDE OUTSIDE VENTILATION AIR      *
*  ----     LOADS                                               *
*        2)TIMES GIVEN IN STANDARD TIME FOR THE LOCATION        *
*          IN CONSIDERATION                                     *
*                                                               *
*****************************************************************
```

SIMPLE STRUCTURE RUN 3, CHICAGO DIVIDE INTO ZONES; ADD PLENUM DOE-2.1E-001 Thu Nov 4 16:29:40 1993LDL RUN 3
DESIGN-DAY SIZING OF VAV SYSTEM SHOW ALL REPORTS
REPORT- LS-D BUILDING MONTHLY LOADS SUMMARY DESIGN DAY WEATHER FILE- TRY CHICAGO

	COOLING						HEATING						ELEC	
MONTH	COOLING ENERGY (MBTU)	TIME OF MAX DY	TIME OF MAX HR	DRY-BULB TEMP	WET-BULB TEMP	MAXIMUM COOLING LOAD (KBTU/HR)	HEATING ENERGY (MBTU)	TIME OF MAX DY	TIME OF MAX HR	DRY-BULB TEMP	WET-BULB TEMP	MAXIMUM HEATING LOAD (KBTU/HR)	ELEC-TRICAL ENERGY (KWH)	MAXIMUM ELEC LOAD (KW)
JAN	0.14087	7	15	6.F	6.F	20.807	-2.529	5	6	-2.F	-2.F	-48.782	146.	11.500
FEB	0.00000					0.000	0.000					0.000	0.	0.000
MAR	0.00000					0.000	0.000					0.000	0.	0.000
APR	1.20506	8	16	65.F	51.F	67.130	-0.281	6	6	40.F	38.F	-11.985	146.	11.500
MAY	0.00000					0.000	0.000					0.000	0.	0.000
JUN	0.00000					0.000	0.000					0.000	0.	0.000
JUL	0.00000					0.000	0.000					0.000	0.	0.000
AUG	2.16346	5	17	90.F	73.F	79.840	-0.019	3	1	77.F	67.F	-0.350	146.	11.500
SEP	0.00000					0.000	0.000					0.000	0.	0.000
OCT	0.00000					0.000	0.000					0.000	0.	0.000
NOV	0.00000					0.000	0.000					0.000	0.	0.000
DEC	0.00000					0.000	0.000					0.000	0.	0.000
TOTAL	3.509						-2.829						439.	
MAX						79.840						-48.782		11.500

SIMPLE STRUCTURE RUN 3, CHICAGO DIVIDE INTO ZONES; ADD PLENUM DOE-2.1E-001 Thu Nov 4 16:29:40 1993LDL RUN 3
DESIGN-DAY SIZING OF VAV SYSTEM SHOW ALL REPORTS
REPORT- LS-E SPACE MONTHLY LOAD COMPONENTS IN MBTU FOR PLENUM-1 DESIGN DAY WEATHER FILE- TRY CHICAGO

(UNITS=MBTU)		WALLS	ROOFS	INT SUR	UND SUR	INFIL	WIN CON	WIN SOL	OCCUP	LIGHTS	EQUIP	SOURCE	TOTAL
	HEATNG	0.002	-0.040	0.000	0.000	0.000	0.000	0.000	0.000	0.000	0.000	0.000	-0.039
AUG	SEN CL	0.060	1.792	0.000	0.000	0.000	0.000	0.000	0.000	0.000	0.000	0.000	1.851
	LAT CL					0.000			0.000		0.000	0.000	0.000
	HEATNG	-0.190	-4.270	0.000	0.000	0.000	0.000	0.000	0.000	0.000	0.000	0.000	-4.460
JAN	SEN CL	0.000	0.000	0.000	0.000	0.000	0.000	0.000	0.000	0.000	0.000	0.000	0.000
	LAT CL					0.000			0.000		0.000	0.000	0.000
	HEATNG	-0.036	-0.881	0.000	0.000	0.000	0.000	0.000	0.000	0.000	0.000	0.000	-0.916
APR	SEN CL	0.008	0.418	0.000	0.000	0.000	0.000	0.000	0.000	0.000	0.000	0.000	0.426
	LAT CL					0.000			0.000		0.000	0.000	0.000
	HEATNG	-0.224	-5.191	0.000	0.000	0.000	0.000	0.000	0.000	0.000	0.000	0.000	-5.415
TOT	SEN CL	0.067	2.210	0.000	0.000	0.000	0.000	0.000	0.000	0.000	0.000	0.000	2.277
	LAT CL					0.000			0.000		0.000	0.000	0.000

SIMPLE STRUCTURE RUN 3, CHICAGO DIVIDE INTO ZONES; ADD PLENUM DOE-2.1E-001 Thu Nov 4 16:29:40 1993LDL RUN 3
DESIGN-DAY SIZING OF VAV SYSTEM SHOW ALL REPORTS
REPORT- LS-E SPACE MONTHLY LOAD COMPONENTS IN MBTU FOR SPACE1-1 DESIGN DAY WEATHER FILE- TRY CHICAGO

(UNITS=MBTU)		WALLS	ROOFS	INT SUR	UND SUR	INFIL	WIN CON	WIN SOL	OCCUP	LIGHTS	EQUIP	SOURCE	TOTAL
	HEATNG	0.000	0.000	0.000	0.000	0.000	0.000	0.000	0.000	0.000	0.000	0.000	0.000
AUG	SEN CL	0.061	0.000	0.000	-0.034	0.000	0.140	0.476	0.025	0.054	0.031	0.000	0.753
	LAT CL					0.000			0.014		0.000	0.000	0.014
	HEATNG	-0.144	0.000	0.000	-0.075	-0.144	-0.549	0.273	0.010	0.028	0.015	0.000	-0.586
JAN	SEN CL	-0.019	0.000	0.000	-0.016	-0.029	-0.094	0.159	0.014	0.025	0.016	0.000	0.055
	LAT CL					0.000			0.009		0.000	0.000	0.009
	HEATNG	-0.019	0.000	0.000	-0.028	0.000	-0.078	0.078	0.000	0.005	0.002	0.000	-0.040
APR	SEN CL	0.006	0.000	0.000	-0.063	0.000	-0.043	0.551	0.025	0.049	0.029	0.000	0.553
	LAT CL					0.000			0.014		0.000	0.000	0.014
	HEATNG	-0.163	0.000	0.000	-0.103	-0.144	-0.626	0.351	0.010	0.033	0.016	0.000	-0.626
TOT	SEN CL	0.048	0.000	0.000	-0.114	-0.029	0.002	1.187	0.064	0.127	0.076	0.000	1.361
	LAT CL					0.000			0.036		0.000	0.000	0.036

SIMPLE STRUCTURE RUN 3, CHICAGO DIVIDE INTO ZONES; ADD PLENUM DOE-2.1E-001 Thu Nov 4 16:29:40 1993LDL RUN 3
DESIGN-DAY SIZING OF VAV SYSTEM SHOW ALL REPORTS
REPORT- LS-F BUILDING MONTHLY LOAD COMPONENTS IN MBTU DESIGN DAY WEATHER FILE- TRY CHICAGO

(UNITS=MBTU)		WALLS	ROOFS	INT SUR	UND SUR	INFIL	WIN CON	WIN SOL	OCCUP	LIGHTS	EQUIP	SOURCE	TOTAL
	HEATNG	0.000	0.000	0.000	-0.049	0.000	0.000	0.000	0.000	0.022	0.007	0.000	-0.019
AUG	SEN CL	0.177	0.000	0.000	-0.113	0.000	0.341	1.269	0.118	0.233	0.138	0.000	2.163
	LAT CL					0.000			0.066		0.000	0.000	0.066
	HEATNG	-0.520	0.000	0.000	-0.383	-0.734	-1.637	0.469	0.053	0.148	0.075	0.000	-2.529
JAN	SEN CL	-0.028	0.000	0.000	-0.049	-0.089	-0.116	0.186	0.063	0.104	0.070	0.000	0.141
	LAT CL					0.000			0.038		0.000	0.000	0.038
	HEATNG	-0.069	0.000	0.000	-0.236	0.000	-0.244	0.212	0.001	0.042	0.014	0.000	-0.281
APR	SEN CL	-0.010	0.000	0.000	-0.196	0.000	-0.131	1.086	0.115	0.211	0.130	0.000	1.205
	LAT CL					0.000			0.066		0.000	0.000	0.066
	HEATNG	-0.590	0.000	0.000	-0.668	-0.734	-1.881	0.681	0.054	0.212	0.096	0.000	-2.829
TOT	SEN CL	0.140	0.000	0.000	-0.358	-0.089	0.094	2.541	0.296	0.548	0.338	0.000	3.509
	LAT CL					0.000			0.170		0.000	0.000	0.170

SPACE SPACE1-1

MONTH	----LIGHTING---- TASK LIGHTING (KWH)	TOTAL LIGHTING (KWH)	EQUIPMENT GENERAL EQUIPMENT (KWH)	----------PROCESS PROCESS ELECTRIC (KWH)	PROCESS GAS (MBTU)	PROCESS HOT WATER (MBTU)
AUG	0.00	21.30	9.61	0.00	0.0000	0.0000
JAN	0.00	21.30	9.61	0.00	0.0000	0.0000
APR	0.00	21.30	9.61	0.00	0.0000	0.0000
ANNUAL	0.00	63.91	28.83	0.00	0.0000	0.0000

BUILDING

MONTH	LIGHTING TASK LIGHTING (KWH)	LIGHTING TOTAL LIGHTING (KWH)	EQUIPMENT GENERAL EQUIPMENT (KWH)	PROCESS ELECTRIC (KWH)	PROCESS GAS (MBTU)	PROCESS HOT WATER (MBTU)
AUG	0.00	100.88	45.50	0.00	0.0000	0.0000
JAN	0.00	100.88	45.50	0.00	0.0000	0.0000
APR	0.00	100.88	45.50	0.00	0.0000	0.0000
ANNUAL	0.00	302.63	136.50	0.00	0.0000	0.0000

DATA FOR SPACE SPACE1-1

MONTH	NUMBER OF HOURS MANAGEMENT WOULD BE EMPLOYED	AVERAGE DAILY SOLAR RADIATION INTO SPACE (BTU/DAY)	MAXIMUM HOURLY SOLAR RADIATION INTO SPACE (BTU/HR)
AUG	0.	158914.781	24881.861
JAN	0.	144114.188	26539.266
APR	0.	209630.172	34315.316
ANNUAL	0.	170886.422	34315.316

SIMPLE STRUCTURE RUN 3, CHICAGO
DESIGN-DAY SIZING OF VAV SYSTEM
REPORT- LS-A SPACE PEAK LOADS SUMMARY

DIVIDE INTO ZONES; ADD PLENUM
SHOW ALL REPORTS

DOE-2.1E-001 Thu Nov 4 16:29:40 1993LDL RUN 3

WEATHER FILE- TRY CHICAGO

SPACE NAME	MULTIPLIER SPACE	MULTIPLIER FLOOR	COOLING LOAD (KBTU/HR)	TIME OF PEAK	DRY-BULB	WET-BULB	HEATING LOAD (KBTU/HR)	TIME OF PEAK	DRY-BULB	WET-BULB
PLENUM-1	1.	1.	71.342	JUL 7 4 PM	90.F	72.F	-72.382	JAN 12 8 AM	-7.F	-7.F
SPACE1-1	1.	1.	33.718	NOV 8 3 PM	60.F	49.F	-14.429	JAN 12 8 AM	-7.F	-7.F
SPACE2-1	1.	1.	13.418	AUG 30 12 NOON	75.F	60.F	-5.455	JAN 7 5 AM	2.F	2.F
SPACE3-1	1.	1.	20.153	JUL 9 4 PM	94.F	74.F	-14.299	JAN 1 4 AM	3.F	2.F
SPACE4-1	1.	1.	11.901	JUN 27 7 PM	77.F	61.F	-5.834	JAN 12 8 AM	-7.F	-7.F
SPACE5-1	1.	1.	15.332	AUG 30 3 PM	82.F	64.F	-7.166	MAR 24 4 AM	12.F	11.F
SUM			165.863				-119.564			
BUILDING PEAK			80.443	AUG 19 6 PM	90.F	71.F	-44.428	MAR 24 6 AM	8.F	7.F

Page left intentionally blank

SPACE PLENUM-1

MULTIPLIER 1.0 FLOOR MULTIPLIER 1.0

FLOOR AREA 5000 SQFT 465 M2
VOLUME 10000 CUFT 283 M3

	COOLING LOAD		HEATING LOAD	
TIME	JUL 7 4PM		JAN 12 8AM	
DRY-BULB TEMP	90F	32C	-7F	-22C
WET-BULB TEMP	72F	22C	-7F	-22C

	SENSIBLE (KBTU/H)	SENSIBLE (KW)	LATENT (KBTU/H)	LATENT (KW)	SENSIBLE (KBTU/H)	SENSIBLE (KW)
WALL CONDUCTION	1.730	0.507	0.000	0.000	-3.114	-0.913
ROOF CONDUCTION	69.613	20.396	0.000	0.000	-69.267	-20.295
WINDOW GLASS+FRM COND	0.000	0.000	0.000	0.000	0.000	0.000
WINDOW GLASS SOLAR	0.000	0.000	0.000	0.000	0.000	0.000
DOOR CONDUCTION	0.000	0.000	0.000	0.000	0.000	0.000
INTERNAL SURFACE COND	0.000	0.000	0.000	0.000	0.000	0.000
UNDERGROUND SURF COND	0.000	0.000	0.000	0.000	0.000	0.000
OCCUPANTS TO SPACE	0.000	0.000	0.000	0.000	0.000	0.000
LIGHT TO SPACE	0.000	0.000	0.000	0.000	0.000	0.000
EQUIPMENT TO SPACE	0.000	0.000	0.000	0.000	0.000	0.000
PROCESS TO SPACE	0.000	0.000	0.000	0.000	0.000	0.000
INFILTRATION	0.000	0.000	0.000	0.000	0.000	0.000
TOTAL	71.342	20.903	0.000	0.000	-72.382	-21.208
TOTAL LOAD	71.342 KBTU/H		20.903 KW		-72.382 KBTU/H	-21.208 KW
TOTAL LOAD / AREA	14.27BTU/H.SQFT		45.000 W / M2		14.476BTU/H.SQFT	45.656 W / M2

NOTE 1)THE ABOVE LOADS EXCLUDE OUTSIDE VENTILATION AIR LOADS
2)TIMES GIVEN IN STANDARD TIME FOR THE LOCATION IN CONSIDERATION

SPACE SPACE1-1

MULTIPLIER 1.0 FLOOR MULTIPLIER 1.0

FLOOR AREA 1056 SQFT 98 M2
VOLUME 8448 CUFT 239 M3

	COOLING LOAD		HEATING LOAD	
TIME	NOV 8 3PM		JAN 12 8AM	
DRY-BULB TEMP	60F	16C	-7F	-22C
WET-BULB TEMP	49F	9C	-7F	-22C

	SENSIBLE (KBTU/H)	SENSIBLE (KW)	LATENT (KBTU/H)	LATENT (KW)	SENSIBLE (KBTU/H)	SENSIBLE (KW)
WALL CONDUCTION	1.700	0.498	0.000	0.000	-2.726	-0.799
ROOF CONDUCTION	0.000	0.000	0.000	0.000	0.000	0.000
WINDOW GLASS+FRM COND	1.936	0.567	0.000	0.000	-9.976	-2.923
WINDOW GLASS SOLAR	22.696	6.650	0.000	0.000	0.775	0.227
DOOR CONDUCTION	0.000	0.000	0.000	0.000	0.000	0.000
INTERNAL SURFACE COND	0.000	0.000	0.000	0.000	0.000	0.000
UNDERGROUND SURF COND	-0.950	-0.278	0.000	0.000	-1.584	-0.464
OCCUPANTS TO SPACE	2.335	0.684	1.433	0.420	0.120	0.035
LIGHT TO SPACE	3.598	1.054	0.000	0.000	0.464	0.136
EQUIPMENT TO SPACE	2.538	0.744	0.000	0.000	0.188	0.055
PROCESS TO SPACE	0.000	0.000	0.000	0.000	0.000	0.000
INFILTRATION	-0.136	-0.040	0.000	0.000	-1.689	-0.495
TOTAL	33.718	9.879	1.433	0.420	-14.429	-4.228
TOTAL LOAD	35.151 KBTU/H		10.299 KW		-14.429 KBTU/H	-4.228 KW
TOTAL LOAD / AREA	33.29BTU/H.SQFT		104.981 W / M2		13.664BTU/H.SQFT	43.093 W / M2

```
*****************************************************************
*                                                               *
*  NOTE  1)THE ABOVE LOADS EXCLUDE OUTSIDE VENTILATION AIR      *
*  ----     LOADS                                               *
*        2)TIMES GIVEN IN STANDARD TIME FOR THE LOCATION        *
*          IN CONSIDERATION                                     *
*                                                               *
*****************************************************************
```

*** BUILDING ***

FLOOR AREA	5000	SQFT	465	SQMT
VOLUME	50000	CUFT	1416	CUMT

	COOLING LOAD		HEATING LOAD	
TIME	AUG 19 6PM		MAR 24 6AM	
DRY-BULB TEMP	90F	32C	8F	-13C
WET-BULB TEMP	71F	22C	7F	-14C

	SENSIBLE (KBTU/H)	SENSIBLE (KW)	LATENT (KBTU/H)	LATENT (KW)	SENSIBLE (KBTU/H)	SENSIBLE (KW)
WALL CONDUCTION	4.297	1.259	0.000	0.000	-6.888	-2.018
ROOF CONDUCTION	0.000	0.000	0.000	0.000	0.000	0.000
WINDOW GLASS+FRM COND	8.963	2.626	0.000	0.000	-22.096	-6.474
WINDOW GLASS SOLAR	29.977	8.783	0.000	0.000	1.992	0.584
DOOR CONDUCTION	0.000	0.000	0.000	0.000	0.000	0.000
INTERNAL SURFACE COND	0.000	0.000	0.000	0.000	0.000	0.000
UNDERGROUND SURF COND	-1.000	-0.293	0.000	0.000	-7.750	-2.271
OCCUPANTS TO SPACE	11.607	3.401	6.776	1.985	0.026	0.008
LIGHT TO SPACE	17.920	5.251	0.000	0.000	1.079	0.316
EQUIPMENT TO SPACE	8.679	2.543	0.000	0.000	0.367	0.107
PROCESS TO SPACE	0.000	0.000	0.000	0.000	0.000	0.000
INFILTRATION	0.000	0.000	0.000	0.000	-11.157	-3.269
TOTAL	80.443	23.570	6.776	1.985	-44.428	-13.017
TOTAL LOAD	87.218 KBTU/H		25.555 KW		-44.428 KBTU/H	-13.017 KW
TOTAL LOAD / AREA	17.44BTU/H.SQFT		55.014 W /SQMT		8.886BTU/H.SQFT	28.023 W /SQMT

```
*****************************************************************
*                                                               *
*  NOTE  1)THE ABOVE LOADS EXCLUDE OUTSIDE VENTILATION AIR      *
*  ----     LOADS                                               *
*        2)TIMES GIVEN IN STANDARD TIME FOR THE LOCATION        *
*          IN CONSIDERATION                                     *
*                                                               *
*****************************************************************
```

	COOLING						HEATING						ELEC	
MONTH	COOLING ENERGY (MBTU)	TIME OF MAX DY	TIME OF MAX HR	DRY-BULB TEMP	WET-BULB TEMP	MAXIMUM COOLING LOAD (KBTU/HR)	HEATING ENERGY (MBTU)	TIME OF MAX DY	TIME OF MAX HR	DRY-BULB TEMP	WET-BULB TEMP	MAXIMUM HEATING LOAD (KBTU/HR)	ELEC-TRICAL ENERGY (KWH)	MAXIMUM ELEC LOAD (KW)
JAN	4.78164	25	16	48.F	42.F	49.888	-11.550	12	8	-7.F	-7.F	-44.074	2821.	11.500
FEB	4.43467	15	16	31.F	26.F	51.672	-10.628	4	6	7.F	6.F	-44.237	2451.	11.500
MAR	6.38896	5	17	57.F	46.F	51.477	-7.794	24	6	8.F	7.F	-44.428	2709.	11.500
APR	12.44952	26	15	78.F	61.F	68.359	-2.422	8	6	32.F	29.F	-21.366	2810.	11.500
MAY	15.49518	20	15	77.F	68.F	68.505	-1.047	6	5	39.F	35.F	-12.132	2821.	11.500
JUN	19.14147	20	15	90.F	77.F	75.856	-0.233	23	5	52.F	48.F	-5.822	2585.	11.500
JUL	24.68539	9	15	94.F	74.F	80.255	-0.006	1	1	63.F	54.F	-0.240	2821.	11.500
AUG	22.43433	19	17	90.F	71.F	80.443	-0.009	5	5	55.F	54.F	-2.692	2821.	11.500
SEP	16.82664	26	16	82.F	61.F	77.270	-0.537	22	6	35.F	31.F	-12.155	2585.	11.500
OCT	13.10616	10	16	68.F	53.F	71.816	-1.883	21	6	30.F	29.F	-17.395	2821.	11.500
NOV	6.53109	8	15	60.F	49.F	66.382	-6.602	15	6	28.F	26.F	-28.497	2473.	11.500
DEC	4.46447	10	15	41.F	35.F	52.291	-10.857	8	20	18.F	16.F	-37.581	2709.	11.500
TOTAL	150.740						-53.568						32429.	
MAX						80.443						-44.428		11.500

SIMPLE STRUCTURE RUN 3, CHICAGO DIVIDE INTO ZONES; ADD PLENUM DOE-2.1E-001 Thu Nov 4 16:29:40 1993LDL RUN 3
DESIGN-DAY SIZING OF VAV SYSTEM SHOW ALL REPORTS
REPORT- LS-E SPACE MONTHLY LOAD COMPONENTS IN MBTU FOR PLENUM-1 WEATHER FILE- TRY CHICAGO

(UNITS=MBTU)		WALLS	ROOFS	INT SUR	UND SUR	INFIL	WIN CON	WIN SOL	OCCUP	LIGHTS	EQUIP	SOURCE	TOTAL
	HEATNG	-1.256	-27.950	0.000	0.000	0.000	0.000	0.000	0.000	0.000	0.000	0.000	-29.206
JAN	SEN CL	0.000	0.000	0.000	0.000	0.000	0.000	0.000	0.000	0.000	0.000	0.000	0.000
	LAT CL					0.000			0.000		0.000	0.000	0.000
	HEATNG	-1.053	-23.088	0.000	0.000	0.000	0.000	0.000	0.000	0.000	0.000	0.000	-24.141
FEB	SEN CL	-0.001	0.040	0.000	0.000	0.000	0.000	0.000	0.000	0.000	0.000	0.000	0.039
	LAT CL					0.000			0.000		0.000	0.000	0.000
	HEATNG	-0.829	-17.405	0.000	0.000	0.000	0.000	0.000	0.000	0.000	0.000	0.000	-18.234
MAR	SEN CL	0.002	0.344	0.000	0.000	0.000	0.000	0.000	0.000	0.000	0.000	0.000	0.346
	LAT CL					0.000			0.000		0.000	0.000	0.000
	HEATNG	-0.417	-9.393	0.000	0.000	0.000	0.000	0.000	0.000	0.000	0.000	0.000	-9.811
APR	SEN CL	0.047	3.245	0.000	0.000	0.000	0.000	0.000	0.000	0.000	0.000	0.000	3.291
	LAT CL					0.000			0.000		0.000	0.000	0.000
	HEATNG	-0.276	-6.574	0.000	0.000	0.000	0.000	0.000	0.000	0.000	0.000	0.000	-6.849
MAY	SEN CL	0.091	5.170	0.000	0.000	0.000	0.000	0.000	0.000	0.000	0.000	0.000	5.260
	LAT CL					0.000			0.000		0.000	0.000	0.000
	HEATNG	-0.109	-3.194	0.000	0.000	0.000	0.000	0.000	0.000	0.000	0.000	0.000	-3.304
JUN	SEN CL	0.235	9.037	0.000	0.000	0.000	0.000	0.000	0.000	0.000	0.000	0.000	9.272
	LAT CL					0.000			0.000		0.000	0.000	0.000
	HEATNG	-0.028	-1.395	0.000	0.000	0.000	0.000	0.000	0.000	0.000	0.000	0.000	-1.423
JUL	SEN CL	0.448	14.217	0.000	0.000	0.000	0.000	0.000	0.000	0.000	0.000	0.000	14.665
	LAT CL					0.000			0.000		0.000	0.000	0.000
	HEATNG	-0.050	-1.929	0.000	0.000	0.000	0.000	0.000	0.000	0.000	0.000	0.000	-1.979
AUG	SEN CL	0.337	10.674	0.000	0.000	0.000	0.000	0.000	0.000	0.000	0.000	0.000	11.011
	LAT CL					0.000			0.000		0.000	0.000	0.000
	HEATNG	-0.226	-5.934	0.000	0.000	0.000	0.000	0.000	0.000	0.000	0.000	0.000	-6.160
SEP	SEN CL	0.152	5.267	0.000	0.000	0.000	0.000	0.000	0.000	0.000	0.000	0.000	5.420
	LAT CL					0.000			0.000		0.000	0.000	0.000
	HEATNG	-0.418	-9.970	0.000	0.000	0.000	0.000	0.000	0.000	0.000	0.000	0.000	-10.389
OCT	SEN CL	0.047	1.534	0.000	0.000	0.000	0.000	0.000	0.000	0.000	0.000	0.000	1.581
	LAT CL					0.000			0.000		0.000	0.000	0.000
	HEATNG	-0.779	-17.598	0.000	0.000	0.000	0.000	0.000	0.000	0.000	0.000	0.000	-18.377
NOV	SEN CL	0.015	0.329	0.000	0.000	0.000	0.000	0.000	0.000	0.000	0.000	0.000	0.344
	LAT CL					0.000			0.000		0.000	0.000	0.000
	HEATNG	-1.100	-24.357	0.000	0.000	0.000	0.000	0.000	0.000	0.000	0.000	0.000	-25.458
DEC	SEN CL	0.000	0.000	0.000	0.000	0.000	0.000	0.000	0.000	0.000	0.000	0.000	0.000
	LAT CL					0.000			0.000		0.000	0.000	0.000
	HEATNG	-6.542	-148.788	0.000	0.000	0.000	0.000	0.000	0.000	0.000	0.000	0.000	-155.330
TOT	SEN CL	1.372	49.857	0.000	0.000	0.000	0.000	0.000	0.000	0.000	0.000	0.000	51.229
	LAT CL					0.000			0.000		0.000	0.000	0.000

SIMPLE STRUCTURE RUN 3, CHICAGO DIVIDE INTO ZONES; ADD PLENUM DOE-2.1E-001 Thu Nov 4 16:29:40 1993LDL RUN 3
DESIGN-DAY SIZING OF VAV SYSTEM SHOW ALL REPORTS
REPORT- LS-E SPACE MONTHLY LOAD COMPONENTS IN MBTU FOR SPACE1-1 WEATHER FILE- TRY CHICAGO

(UNITS=MBTU)		WALLS	ROOFS	INT SUR	UND SUR	INFIL	WIN CON	WIN SOL	OCCUP	LIGHTS	EQUIP	SOURCE	TOTAL
	HEATNG	-0.883	0.000	0.000	-0.838	-0.385	-3.068	1.041	0.219	0.477	0.261	0.000	-3.176
JAN	SEN CL	-0.195	0.000	0.000	-0.341	-0.166	-0.926	1.803	0.370	0.616	0.398	0.000	1.561
	LAT CL					0.000			0.214		0.000	0.000	0.214
	HEATNG	-0.739	0.000	0.000	-0.810	-0.487	-2.700	1.070	0.186	0.407	0.223	0.000	-2.851
FEB	SEN CL	-0.161	0.000	0.000	-0.361	-0.180	-0.813	1.917	0.326	0.548	0.350	0.000	1.627
	LAT CL					0.000			0.186		0.000	0.000	0.186
	HEATNG	-0.518	0.000	0.000	-0.711	-0.378	-1.961	1.053	0.089	0.262	0.120	0.000	-2.044
MAR	SEN CL	-0.200	0.000	0.000	-0.507	-0.245	-0.953	2.107	0.479	0.799	0.516	0.000	1.995
	LAT CL					0.006			0.277		0.000	0.000	0.282
	HEATNG	-0.224	0.000	0.000	-0.329	0.000	-0.840	0.522	0.038	0.129	0.053	0.000	-0.651
APR	SEN CL	-0.089	0.000	0.000	-0.661	0.000	-0.657	3.133	0.552	0.959	0.604	0.000	3.842
	LAT CL					0.000			0.306		0.000	0.000	0.306
	HEATNG	-0.129	0.000	0.000	-0.181	0.000	-0.478	0.369	0.020	0.080	0.032	0.000	-0.286
MAY	SEN CL	-0.035	0.000	0.000	-0.566	0.000	-0.508	3.179	0.572	1.018	0.629	0.000	4.289
	LAT CL					0.000			0.306		0.000	0.000	0.306
	HEATNG	-0.031	0.000	0.000	-0.037	0.000	-0.113	0.109	0.004	0.020	0.008	0.000	-0.040
JUN	SEN CL	0.143	0.000	0.000	-0.421	0.000	0.116	3.468	0.537	0.992	0.598	0.000	5.433
	LAT CL					0.000			0.278		0.000	0.000	0.278
	HEATNG	0.000	0.000	0.000	0.000	0.000	-0.001	0.001	0.000	0.000	0.000	0.000	0.000
JUL	SEN CL	0.393	0.000	0.000	-0.236	0.000	0.852	3.862	0.590	1.093	0.659	0.000	7.214
	LAT CL					0.000			0.306		0.000	0.000	0.306
	HEATNG	-0.003	0.000	0.000	-0.001	0.000	-0.012	0.011	0.000	0.002	0.001	0.000	-0.003
AUG	SEN CL	0.296	0.000	0.000	-0.156	0.000	0.530	3.849	0.594	1.101	0.662	0.000	6.876
	LAT CL					0.000			0.306		0.000	0.000	0.306
	HEATNG	-0.069	0.000	0.000	-0.030	0.000	-0.257	0.161	0.006	0.033	0.013	0.000	-0.144
SEP	SEN CL	0.069	0.000	0.000	-0.198	0.000	-0.223	4.091	0.530	0.971	0.590	0.000	5.829
	LAT CL					0.000			0.278		0.000	0.000	0.278
	HEATNG	-0.184	0.000	0.000	-0.127	0.000	-0.675	0.387	0.019	0.087	0.034	0.000	-0.458
OCT	SEN CL	-0.074	0.000	0.000	-0.305	0.000	-0.633	3.488	0.572	1.010	0.626	0.000	4.684
	LAT CL					0.000			0.306		0.000	0.000	0.306
	HEATNG	-0.485	0.000	0.000	-0.411	-0.319	-1.795	0.683	0.093	0.263	0.123	0.000	-1.847
NOV	SEN CL	-0.148	0.000	0.000	-0.272	-0.164	-0.778	2.091	0.421	0.707	0.455	0.000	2.313
	LAT CL					0.003			0.242		0.000	0.000	0.245
	HEATNG	-0.764	0.000	0.000	-0.704	-0.459	-2.762	0.635	0.153	0.383	0.193	0.000	-3.324
DEC	SEN CL	-0.209	0.000	0.000	-0.277	-0.153	-0.884	1.174	0.410	0.667	0.438	0.000	1.166
	LAT CL					0.000			0.243		0.000	0.000	0.243
	HEATNG	-4.029	0.000	0.000	-4.179	-2.028	-14.661	6.042	0.827	2.144	1.061	0.000	-14.824
TOT	SEN CL	-0.209	0.000	0.000	-4.299	-0.907	-4.876	34.163	5.952	10.481	6.525	0.000	46.830
	LAT CL					0.009			3.247		0.000	0.000	3.256

SIMPLE STRUCTURE RUN 3, CHICAGO DIVIDE INTO ZONES: ADD PLENUM DOE-2.1E-001 Thu Nov 4 16:29:40 1993LDL RUN 3
DESIGN-DAY SIZING OF VAV SYSTEM SHOW ALL REPORTS
REPORT- LS-F BUILDING MONTHLY LOAD COMPONENTS IN MBTU WEATHER FILE- TRY CHICAGO

(UNITS=MBTU)		WALLS	ROOFS	INT SUR	UND SUR	INFIL	WIN CON	WIN SOL	OCCUP	LIGHTS	EQUIP	SOURCE	TOTAL
JAN	HEATNG	-3.041	0.000	0.000	-3.899	-1.817	-8.700	2.023	0.855	1.987	1.042	0.000	-11.550
	SEN CL	-0.579	0.000	0.000	-1.681	-0.790	-2.000	2.634	1.932	3.188	2.077	0.000	4.782
	LAT CL					0.000			1.129		0.000	0.000	1.129
FEB	HEATNG	-2.551	0.000	0.000	-3.940	-2.252	-7.698	2.351	0.751	1.782	0.929	0.000	-10.628
	SEN CL	-0.482	0.000	0.000	-1.602	-0.904	-1.756	2.990	1.666	2.739	1.784	0.000	4.435
	LAT CL					0.000			0.978		0.000	0.000	0.978
MAR	HEATNG	-1.726	0.000	0.000	-3.607	-1.870	-5.408	2.584	0.405	1.270	0.557	0.000	-7.794
	SEN CL	-0.650	0.000	0.000	-2.160	-1.080	-2.358	4.155	2.278	3.752	2.453	0.000	6.389
	LAT CL					0.013			1.335		0.000	0.000	1.348
APR	HEATNG	-0.735	0.000	0.000	-1.879	0.000	-2.315	1.402	0.177	0.660	0.268	0.000	-2.422
	SEN CL	-0.329	0.000	0.000	-2.804	0.000	-1.719	7.351	2.612	4.494	2.844	0.000	12.450
	LAT CL					0.000			1.444		0.000	0.000	1.444
MAY	HEATNG	-0.382	0.000	0.000	-1.036	0.000	-1.207	0.940	0.085	0.398	0.156	0.000	-1.047
	SEN CL	-0.139	0.000	0.000	-2.502	0.000	-1.371	9.018	2.714	4.802	2.974	0.000	15.495
	LAT CL					0.000			1.446		0.000	0.000	1.446
JUN	HEATNG	-0.084	0.000	0.000	-0.361	0.000	-0.275	0.261	0.016	0.155	0.056	0.000	-0.233
	SEN CL	0.452	0.000	0.000	-1.804	0.000	0.310	10.194	2.539	4.637	2.814	0.000	19.141
	LAT CL					0.000			1.314		0.000	0.000	1.314
JUL	HEATNG	0.000	0.000	0.000	-0.075	0.000	-0.002	0.003	0.000	0.051	0.017	0.000	-0.006
	SEN CL	1.220	0.000	0.000	-1.045	0.000	2.217	11.276	2.788	5.128	3.103	0.000	24.685
	LAT CL					0.000			1.446		0.000	0.000	1.446
AUG	HEATNG	-0.011	0.000	0.000	-0.005	0.000	-0.036	0.033	0.001	0.007	0.002	0.000	-0.009
	SEN CL	0.848	0.000	0.000	-0.740	0.000	1.268	9.901	2.808	5.213	3.137	0.000	22.434
	LAT CL					0.000			1.446		0.000	0.000	1.446
SEP	HEATNG	-0.274	0.000	0.000	-0.215	0.000	-0.869	0.505	0.030	0.208	0.078	0.000	-0.537
	SEN CL	0.073	0.000	0.000	-0.863	0.000	-0.689	8.484	2.505	4.544	2.773	0.000	16.827
	LAT CL					0.000			1.314		0.000	0.000	1.314
OCT	HEATNG	-0.726	0.000	0.000	-0.697	0.000	-2.217	1.009	0.101	0.466	0.182	0.000	-1.883
	SEN CL	-0.345	0.000	0.000	-1.345	0.000	-1.589	6.014	2.696	4.729	2.946	0.000	13.106
	LAT CL					0.000			1.445		0.000	0.000	1.445
NOV	HEATNG	-1.642	0.000	0.000	-1.997	-1.479	-5.002	1.489	0.368	1.147	0.514	0.000	-6.602
	SEN CL	-0.543	0.000	0.000	-1.238	-0.808	-1.956	3.345	2.060	3.446	2.226	0.000	6.531
	LAT CL					0.011			1.182		0.000	0.000	1.193
DEC	HEATNG	-2.497	0.000	0.000	-3.197	-2.097	-7.448	1.349	0.619	1.621	0.794	0.000	-10.856
	SEN CL	-0.667	0.000	0.000	-1.448	-0.802	-2.153	1.946	2.042	3.354	2.194	0.000	4.464
	LAT CL					0.000			1.199		0.000	0.000	1.199
TOT	HEATNG	-14.259	0.000	0.000	-21.578	-10.248	-43.058	14.630	3.462	9.964	4.692	0.000	-56.396
	SEN CL	-1.002	0.000	0.000	-19.593	-4.474	-11.701	79.850	28.933	50.572	31.662	0.000	154.248
	LAT CL					0.024			15.848		0.000	0.000	15.872

SPACE SPACE1-1

	----LIGHTING----		EQUIPMENT	----------PROCESS----------		
MONTH	TASK LIGHTING (KWH)	TOTAL LIGHTING (KWH)	GENERAL EQUIPMENT (KWH)	PROCESS ELECTRIC (KWH)	PROCESS GAS (MBTU)	PROCESS HOT WATER (MBTU)
JAN	0.00	402.18	193.67	0.00	0.0000	0.0000
FEB	0.00	349.67	167.88	0.00	0.0000	0.0000
MAR	0.00	386.57	185.58	0.00	0.0000	0.0000
APR	0.00	400.28	193.16	0.00	0.0000	0.0000
MAY	0.00	402.18	193.67	0.00	0.0000	0.0000
JUN	0.00	369.07	176.99	0.00	0.0000	0.0000
JUL	0.00	402.18	193.67	0.00	0.0000	0.0000
AUG	0.00	402.18	193.67	0.00	0.0000	0.0000
SEP	0.00	369.07	176.99	0.00	0.0000	0.0000
OCT	0.00	402.18	193.67	0.00	0.0000	0.0000
NOV	0.00	353.47	168.90	0.00	0.0000	0.0000
DEC	0.00	386.57	185.58	0.00	0.0000	0.0000
ANNUAL	0.00	4625.43	2223.36	0.00	0.0000	0.0000

BUILDING

MONTH	----LIGHTING---- TASK LIGHTING (KWH)	TOTAL LIGHTING (KWH)	EQUIPMENT GENERAL EQUIPMENT (KWH)	PROCESS ELECTRIC (KWH)	PROCESS GAS (MBTU)	PROCESS HOT WATER (MBTU)
JAN	0.00	1904.24	917.01	0.00	0.0000	0.0000
FEB	0.00	1655.62	794.91	0.00	0.0000	0.0000
MAR	0.00	1830.37	878.71	0.00	0.0000	0.0000
APR	0.00	1895.24	914.61	0.00	0.0000	0.0000
MAY	0.00	1904.24	917.01	0.00	0.0000	0.0000
JUN	0.00	1747.50	838.01	0.00	0.0000	0.0000
JUL	0.00	1904.24	917.01	0.00	0.0000	0.0000
AUG	0.00	1904.24	917.01	0.00	0.0000	0.0000
SEP	0.00	1747.49	838.01	0.00	0.0000	0.0000
OCT	0.00	1904.24	917.01	0.00	0.0000	0.0000
NOV	0.00	1673.62	799.71	0.00	0.0000	0.0000
DEC	0.00	1830.37	878.71	0.00	0.0000	0.0000
ANNUAL	0.00	21903.13	10529.22	0.00	0.0000	0.0000

DATA FOR SPACE SPACE1-1

MONTH	NUMBER OF HOURS MANAGEMENT WOULD BE EMPLOYED	AVERAGE DAILY SOLAR RADIATION INTO SPACE (BTU/DAY)	MAXIMUM HOURLY SOLAR RADIATION INTO SPACE (BTU/HR)
JAN	0.	91833.594	44721.133
FEB	0.	106403.789	44042.688
MAR	0.	101484.391	40590.414
APR	0.	121678.523	32228.947
MAY	0.	114414.562	25011.039
JUN	0.	119506.453	19855.189
JUL	0.	124538.578	22544.020
AUG	0.	124817.953	28443.521
SEP	0.	141770.906	36432.680
OCT	0.	124279.734	41222.324
NOV	0.	92218.547	43065.477
DEC	0.	58324.055	42647.609
ANNUAL	0.	110041.141	44721.133

MMDDHH	GLOBAL DRY BULB TEMP F ----(4)	GLOBAL WIND SPEED KNOTS ----(17)	GLOBAL GLOBAL SOLAR BTU/HR-SQFT ----(15)	BUILDING SENSIBLE CLG LOAD BTU/HR ----(19)
8 5 1	77.2	6.5	0.0	13754.
8 5 2	75.4	6.5	0.0	11618.
8 5 3	73.9	6.5	0.0	9722.
8 5 4	72.7	6.5	0.0	8061.
8 5 5	71.8	6.5	0.0	6637.
8 5 6	71.2	6.5	14.7	9282.
8 5 7	71.0	6.5	73.7	16061.
8 5 8	71.8	6.5	136.0	48682.
8 5 9	73.9	6.5	191.7	54022.
8 510	77.2	6.5	237.0	58066.
8 511	81.0	6.5	268.7	59631.
8 512	84.8	6.5	284.9	58113.
8 513	88.1	6.5	284.3	66171.
8 514	90.2	6.5	266.9	73522.
8 515	91.0	6.5	234.1	77069.
8 516	90.8	6.5	188.0	78377.
8 517	90.2	6.5	131.6	79840.
8 518	89.3	6.5	69.1	66388.
8 519	88.1	6.5	11.3	51033.
8 520	86.6	6.5	0.0	41320.
8 521	84.8	6.5	0.0	33620.
8 522	83.0	6.5	0.0	29098.
8 523	81.0	6.5	0.0	25137.
8 524	79.0	6.5	0.0	21617.
DAILY SUMMARY (AUG 5)				
MN	71.0	6.5	0.0	6637.
MX	91.0	6.5	284.9	79840.
SM	1944.0	156.4	2391.8	996843.
AV	81.0	6.5	99.7	41535.
MONTHLY SUMMARY (AUG)				
MN	71.0	6.5	0.0	6637.
MX	91.0	6.5	284.9	79840.
SM	1944.0	156.4	2391.8	996843.
AV	81.0	6.5	99.7	41535.
YEARLY SUMMARY				
MN	71.0	6.5	0.0	6637.
MX	91.0	6.5	284.9	79840.
SM	1944.0	156.4	2391.8	996843.
AV	81.0	6.5	99.7	41535.

	GLOBAL DRY BULB TEMP F	GLOBAL WIND SPEED KNOTS	GLOBAL GLOBAL SOLAR BTU/HR-SQFT	BUILDING SENSIBLE CLG LOAD BTU/HR
	----(4)	----(17)	----(15)	----(19)
8 5 1	61.0	7.0	0.0	2620.
8 5 2	59.0	0.0	0.0	1178.
8 5 3	57.0	4.0	0.0	358.
8 5 4	57.0	5.0	0.0	183.
8 5 5	55.0	4.0	0.0	146.
8 5 6	52.0	0.0	14.7	1928.
8 5 7	57.0	0.0	73.1	9782.
8 5 8	62.0	0.0	134.4	44195.
8 5 9	68.0	0.0	154.7	50107.
8 510	72.0	3.0	228.6	57516.
8 511	74.0	0.0	263.1	61080.
8 512	76.0	7.0	280.5	59162.
8 513	77.0	6.0	262.1	66258.
8 514	78.0	5.0	246.5	72205.
8 515	77.0	6.0	216.3	74465.
8 516	76.0	6.0	131.7	71804.
8 517	77.0	9.0	72.3	69819.
8 518	76.0	9.0	32.9	54277.
8 519	75.0	7.0	6.3	40991.
8 520	72.0	7.0	0.0	32576.
8 521	69.0	4.0	0.0	24984.
8 522	68.0	4.0	0.0	21017.
8 523	67.0	4.0	0.0	17755.
8 524	66.0	6.0	0.0	14905.
DAILY SUMMARY (AUG 5)				
MN	52.0	0.0	0.0	146.
MX	78.0	9.0	280.5	74465.
SM	1628.0	103.0	2117.3	849310.
AV	67.8	4.3	88.2	35388.
MONTHLY SUMMARY (AUG)				
MN	52.0	0.0	0.0	146.
MX	78.0	9.0	280.5	74465.
SM	1628.0	103.0	2117.3	849310.
AV	67.8	4.3	88.2	35388.
YEARLY SUMMARY				
MN	52.0	0.0	0.0	146.
MX	78.0	9.0	280.5	74465.
SM	1628.0	103.0	2117.3	849310.
AV	67.8	4.3	88.2	35388.

SIMPLE STRUCTURE RUN 3, CHICAGO DIVIDE INTO ZONES; ADD PLENUM DOE-2.1E-001 Thu Nov 4 16:29:40 1993SDL RUN 1
DESIGN-DAY SIZING OF VAV SYSTEM SHOW ALL REPORTS
REPORT- SV-A SYSTEM DESIGN PARAMETERS SYST-1 WEATHER FILE- TRY CHICAGO

SYSTEM NAME	SYSTEM TYPE	ALTITUDE MULTIPLIER	FLOOR AREA (SQFT)	MAX PEOPLE
SYST-1	VAVS	1.020	5000.0	52.

SUPPLY FAN (CFM)	ELEC (KW)	DELTA-T (F)	RETURN FAN (CFM)	ELEC (KW)	DELTA-T (F)	OUTSIDE AIR RATIO	COOLING CAPACITY (KBTU/HR)	SENSIBLE (SHR)	HEATING CAPACITY (KBTU/HR)	COOLING EIR (BTU/BTU)	HEATING EIR (BTU/BTU)
6354.	7.311	3.6	0.	0.000	0.0	0.167	195.964	0.770	-44.161	0.00	0.37

ZONE NAME	SUPPLY FLOW (CFM)	EXHAUST FLOW (CFM)	FAN (KW)	MINIMUM FLOW RATIO	OUTSIDE AIR FLOW (CFM)	COOLING CAPACITY (KBTU/HR)	SENSIBLE (SHR)	EXTRACTION RATE (KBTU/HR)	HEATING CAPACITY (KBTU/HR)	ADDITION RATE (KBTU/HR)	MULTIPLIER
SPACE5-1	1454.	0.	0.000	0.300	408.	0.00	0.00	25.13	-91.09	-75.39	1.0
SPACE1-1	1909.	0.	0.000	0.300	224.	0.00	0.00	32.99	-119.59	-98.98	1.0
SPACE2-1	887.	0.	0.000	0.300	102.	0.00	0.00	15.33	-55.58	-46.00	1.0
SPACE3-1	1268.	0.	0.000	0.300	224.	0.00	0.00	21.92	-79.45	-65.75	1.0
SPACE4-1	835.	0.	0.000	0.300	102.	0.00	0.00	14.42	-52.28	-43.26	1.0
PLENUM-1	0.	0.	0.000	0.000	0.	0.00	0.00	0.00	0.00	0.00	1.0

	COOLING						HEATING						ELEC	
MONTH	COOLING ENERGY (MBTU)	TIME OF MAX DY	TIME OF MAX HR	DRY-BULB TEMP	WET-BULB TEMP	MAXIMUM COOLING LOAD (KBTU/HR)	HEATING ENERGY (MBTU)	TIME OF MAX DY	TIME OF MAX HR	DRY-BULB TEMP	WET-BULB TEMP	MAXIMUM HEATING LOAD (KBTU/HR)	ELEC-TRICAL ENERGY (KWH)	MAXIMUM ELEC LOAD (KW)
JAN	0.00000					0.000	-32.540	7	8	-1.F	-1.F	-441.109	3078.	12.721
FEB	0.00000					0.000	-25.221	4	8	7.F	6.F	-419.194	2665.	12.701
MAR	0.00000					0.000	-15.190	25	8	14.F	12.F	-377.563	2904.	12.371
APR	1.52664	29	18	69.F	65.F	68.311	-3.705	8	8	30.F	27.F	-246.024	2992.	13.298
MAY	5.10064	21	14	85.F	75.F	132.661	-0.420	9	9	43.F	39.F	-40.320	3085.	14.424
JUN	14.55954	20	16	90.F	77.F	178.041	0.000					0.000	3054.	15.339
JUL	28.78266	8	16	92.F	74.F	214.902	0.000					0.000	3779.	18.322
AUG	23.67940	19	16	90.F	71.F	183.011	0.000					0.000	3545.	17.242
SEP	9.23581	11	16	86.F	72.F	138.083	-0.227	23	8	36.F	34.F	-99.033	2932.	15.530
OCT	2.26933	4	17	78.F	61.F	49.778	-2.190	21	8	30.F	29.F	-258.277	2994.	12.617
NOV	0.35773	1	16	72.F	59.F	54.561	-12.995	25	8	27.F	25.F	-325.673	2644.	13.017
DEC	0.00000					0.000	-25.768	26	8	15.F	15.F	-393.064	2940.	12.345
TOTAL	85.512						-118.258						36610.	
MAX						214.902						-441.109		18.322

MAXIMUM DAILY INTEGRATED COOLING LOAD (DES DAY) 2274.994 (KBTU)
MAXIMUM DAILY INTEGRATED COOLING LOAD (WTH FILE) 2147.572 (KBTU)

	NUMBER OF HOURS										--COINCIDENT LOADS--	
MONTH	HOURS COOLING LOAD	HOURS HEATING LOAD	HOURS COINCIDENT COOL-HEAT LOAD	HOURS FLOATING	HOURS HEATING AVAIL.	HOURS COOLING AVAIL.	HOURS FANS ON	HOURS FANS CYCLE ON	HOURS NIGHT VENTING	HOURS FLOATING WHEN FANS ON	HEATING LOAD AT COOLING PEAK (KBTU/HR)	ELECTRIC LOAD AT COOLING PEAK (KW)
JAN	0	305	0	439	744	0	305	63	0	0	0.000	0.475
FEB	0	256	0	416	672	0	256	47	0	0	0.000	0.475
MAR	0	240	0	504	715	29	248	17	0	8	0.000	0.475
APR	69	102	0	549	516	204	229	0	0	58	0.000	11.735
MAY	115	40	0	589	485	259	220	0	0	65	0.000	13.348
JUN	203	0	0	517	171	549	207	0	0	4	0.000	15.156
JUL	241	0	0	503	7	737	241	0	0	0	0.000	17.942
AUG	238	0	0	506	43	701	238	0	0	0	0.000	16.987
SEP	155	13	0	552	346	374	205	0	0	37	0.000	14.658
OCT	99	86	1	560	511	233	225	0	0	41	0.000	11.103
NOV	12	186	0	522	686	34	209	1	0	11	0.000	12.583
DEC	0	276	0	468	744	0	276	45	0	0	0.000	0.475
ANNUAL	1132	1504	1	6125	5640	3120	2859	173	0	224		

MONTH	FAN ELECTRIC ENERGY DURING HEATING (KWH)	FAN ELECTRIC ENERGY DURING COOLING (KWH)	FAN ELECTRIC ENERGY DURING HEATING-COOLING (KWH)	FAN ELECTRIC ENERGY DURING FLOATING (KWH)
JAN	256.361	0.000	0.000	0.000
FEB	214.658	0.000	0.000	0.000
MAR	188.892	0.000	0.000	5.833
APR	77.282	59.311	0.000	45.241
MAY	29.165	172.787	0.000	61.428
JUN	0.000	465.212	0.000	3.377
JUL	0.000	957.790	0.000	0.000
AUG	0.000	723.851	0.000	0.000
SEP	9.505	303.856	0.000	32.739
OCT	63.882	77.672	0.729	31.766
NOV	148.524	13.215	0.000	8.918
DEC	230.728	0.000	0.000	0.000
ANNUAL	1218.994	2773.703	0.729	189.301

SIMPLE STRUCTURE RUN 3, CHICAGO DIVIDE INTO ZONES; ADD PLENUM DOE-2.1E-001 Thu Nov 4 16:29:40 1993SDL RUN 1
DESIGN-DAY SIZING OF VAV SYSTEM SHOW ALL REPORTS
REPORT- SS-A SYSTEM MONTHLY LOADS SUMMARY FOR SYST-1 WEATHER FILE- TRY CHICAGO

	COOLING						HEATING						ELEC	
MONTH	COOLING ENERGY (MBTU)	TIME OF MAX DY	TIME OF MAX HR	DRY-BULB TEMP	WET-BULB TEMP	MAXIMUM COOLING LOAD (KBTU/HR)	HEATING ENERGY (MBTU)	TIME OF MAX DY	TIME OF MAX HR	DRY-BULB TEMP	WET-BULB TEMP	MAXIMUM HEATING LOAD (KBTU/HR)	ELEC-TRICAL ENERGY (KWH)	MAXIMUM ELEC LOAD (KW)
JAN	0.00000					0.000	-32.540	7	8	-1.F	-1.F	-441.109	3078.	12.721
FEB	0.00000					0.000	-25.221	4	8	7.F	6.F	-419.194	2665.	12.701
MAR	0.00000					0.000	-15.190	25	8	14.F	12.F	-377.563	2904.	12.371
APR	1.52664	29	18	69.F	65.F	68.311	-3.705	8	8	30.F	27.F	-246.024	2992.	13.298
MAY	5.10064	21	14	85.F	75.F	132.661	-0.420	9	9	43.F	39.F	-40.320	3085.	14.424
JUN	14.55954	20	16	90.F	77.F	178.041	0.000					0.000	3054.	15.339
JUL	28.78266	8	16	92.F	74.F	214.902	0.000					0.000	3779.	18.322
AUG	23.67940	19	16	90.F	71.F	183.011	0.000					0.000	3545.	17.242
SEP	9.23581	11	16	86.F	72.F	138.083	-0.227	23	8	36.F	34.F	-99.033	2932.	15.530
OCT	2.26933	4	17	78.F	61.F	49.778	-2.190	21	8	30.F	29.F	-258.277	2994.	12.617
NOV	0.35773	1	16	72.F	59.F	54.561	-12.995	25	8	27.F	25.F	-325.673	2644.	13.017
DEC	0.00000					0.000	-25.768	26	8	15.F	15.F	-393.064	2940.	12.345
TOTAL	85.512						-118.258						36610.	
MAX						214.902						-441.109		18.322

	--ZONE COOLING--		--ZONE HEATING-		--BASEBOARDS--		--PREHEAT OR FURN FAN ELEC--	
MONTH	COOLING BY ZONE COILS OR NAT VENTIL (MBTU)	MAXIMUM COOLING BY ZONE COILS OR NAT VENTIL (KBTU/HR)	HEATING BY ZONE COILS OR FURNACE (MBTU)	MAXIMUM HEATING BY ZONE COILS OR FURNACE (KBTU/HR)	BASEBOARD HEATING ENERGY (MBTU)	MAXIMUM BASEBOARD HEATING ENERGY (KBTU/HR)	PREHEAT COIL ENERGY OR ELEC FOR FURN FAN (MBTU)	MAXIMUM PREHEAT COIL ENERGY OR ELEC FOR FURN FAN (KBTU/HR)
JAN	0.00000	0.000	-17.82038	-297.637	0.00000	0.000	-4.75593	-67.279
FEB	0.00000	0.000	-14.18888	-294.461	0.00000	0.000	-2.92867	-51.287
MAR	0.00000	0.000	-8.90534	-273.295	0.00000	0.000	-0.85343	-49.556
APR	0.00000	0.000	-2.10489	-209.516	0.00000	0.000	-0.02173	-8.605
MAY	0.00000	0.000	-0.07233	-20.454	0.00000	0.000	0.00000	0.000
JUN	0.00000	0.000	0.00000	0.000	0.00000	0.000	0.00000	0.000
JUL	0.00000	0.000	0.00000	0.000	0.00000	0.000	0.00000	0.000
AUG	0.00000	0.000	0.00000	0.000	0.00000	0.000	0.00000	0.000
SEP	0.00000	0.000	-0.09337	-63.534	0.00000	0.000	-0.00095	-0.948
OCT	0.00000	0.000	-1.16098	-195.242	0.00000	0.000	-0.02610	-7.933
NOV	0.00000	0.000	-8.25455	-257.724	0.00000	0.000	-0.21340	-15.096
DEC	0.00000	0.000	-15.28043	-282.811	0.00000	0.000	-1.52668	-42.234
TOTAL	0.000		-67.881		0.000		-10.327	
MAX		0.000		-297.637		0.000		-67.279

	NUMBER OF HOURS										--COINCIDENT LOADS--	
MONTH	HOURS COOLING LOAD	HOURS HEATING LOAD	HOURS COINCIDENT COOL-HEAT LOAD	HOURS FLOATING	HOURS HEATING AVAIL.	HOURS COOLING AVAIL.	HOURS FANS ON	HOURS FANS CYCLE ON	HOURS NIGHT VENTING	HOURS FLOATING WHEN FANS ON	HEATING LOAD AT COOLING PEAK (KBTU/HR)	ELECTRIC LOAD AT COOLING PEAK (KW)
JAN	0	305	0	439	744	0	305	63	0	0	0.000	0.475
FEB	0	256	0	416	672	0	256	47	0	0	0.000	0.475
MAR	0	240	0	504	711	29	248	17	0	8	0.000	0.475
APR	69	102	0	549	504	204	229	0	0	58	0.000	11.735
MAY	115	40	0	589	452	259	220	0	0	65	0.000	13.348
JUN	203	0	0	517	147	549	207	0	0	4	0.000	15.156
JUL	241	0	0	503	2	737	241	0	0	0	0.000	17.942
AUG	238	0	0	506	30	701	238	0	0	0	0.000	16.987
SEP	155	13	0	552	314	374	205	0	0	37	0.000	14.658
OCT	99	86	1	560	494	233	225	0	0	41	0.000	11.103
NOV	12	186	0	522	676	34	209	1	0	11	0.000	12.583
DEC	0	276	0	468	744	0	276	45	0	0	0.000	0.475
ANNUAL	1132	1504	1	6125	5490	3120	2859	173	0	224		

	--FAN ELEC---		--FUEL HEAT--		--FUEL COOL--		-ELEC HEAT--		-ELEC COOL--	
MONTH	FAN ENERGY (KWH)	MAXIMUM FAN LOAD (KW)	GAS OIL ENERGY (MBTU)	MAXIMUM GAS OIL LOAD (KBTU/HR)	GAS OIL ENERGY (MBTU)	MAXIMUM GAS OIL LOAD (KBTU/HR)	ELECTRIC ENERGY (KWH)	MAXIMUM ELECTRIC LOAD (KW)	ELECTRIC ENERGY (KWH)	MAXIMUM ELECTRIC LOAD (KW)
JAN	256.	3.984	0.000	0.000	0.000	0.000	0.	0.000	0.	0.000
FEB	215.	3.878	0.000	0.000	0.000	0.000	0.	0.000	0.	0.000
MAR	195.	3.320	0.000	0.000	0.000	0.000	0.	0.000	0.	0.000
APR	182.	2.198	0.000	0.000	0.000	0.000	0.	0.000	0.	0.000
MAY	263.	2.955	0.000	0.000	0.000	0.000	0.	0.000	0.	0.000
JUN	469.	4.156	0.000	0.000	0.000	0.000	0.	0.000	0.	0.000
JUL	958.	7.304	0.000	0.000	0.000	0.000	0.	0.000	0.	0.000
AUG	724.	5.987	0.000	0.000	0.000	0.000	0.	0.000	0.	0.000
SEP	346.	4.123	0.000	0.000	0.000	0.000	0.	0.000	0.	0.000
OCT	173.	1.794	0.000	0.000	0.000	0.000	0.	0.000	0.	0.000
NOV	171.	3.021	0.000	0.000	0.000	0.000	0.	0.000	0.	0.000
DEC	231.	3.543	0.000	0.000	0.000	0.000	0.	0.000	0.	0.000
TOTAL	4181.		0.000		0.000		0.		0.	
MAX		7.304		0.000		0.000		0.000		0.000

MONTH	SENSIBLE COOLING ENERGY (MBTU)	LATENT COOLING ENERGY (MBTU)	MAX TOTAL COOLING ENERGY (KBTU/HR)	SENSIBLE HEAT RATIO AT MAX	TIME OF MAX DY	TIME OF MAX HR	SENSIBLE HEATING ENERGY (MBTU)	LATENT HEATING ENERGY (MBTU)	MAX TOTAL HEATING ENERGY (KBTU/HR)
JAN	0.00000	0.00000	0.000				-32.54049	0.00000	-441.10925
FEB	0.00000	0.00000	0.000				-25.22139	0.00000	-419.19385
MAR	0.00000	0.00000	0.000				-15.18957	0.00000	-377.56302
APR	1.46930	0.05734	68.311	0.848	29	18	-3.70518	0.00000	-246.024
MAY	4.54812	0.55252	132.661	0.777	21	14	-0.42017	0.00000	-40.320
JUN	13.34809	1.21146	178.041	0.793	20	16	0.00000	0.00000	0.000
JUL	25.94250	2.84016	214.902	0.883	8	16	0.00000	0.00000	0.000
AUG	21.18397	2.49544	183.011	0.919	19	16	0.00000	0.00000	0.000
SEP	8.60116	0.63464	138.083	0.849	11	16	-0.22747	0.00000	-99.033
OCT	2.17180	0.09753	49.778	1.000	4	17	-2.19046	0.00000	-258.277
NOV	0.35701	0.00072	54.561	1.000	1	16	-12.99550	0.00000	-325.673
DEC	0.00000	0.00000	0.000				-25.76809	0.00000	-393.06366
TOTAL	77.622	7.890					-118.258	0.000	
MAX			214.902	0.883					-441.109

	-----COOLING-----				---HEATING---			DAY COOLING PEAK			
	AUG 5				JAN 7			AUG 5			
HOUR	HOURLY COOLING LOAD (KBTU)	SENSIBLE HEAT RATIO	DRY-BULB TEMP	WET-BULB TEMP	HOURLY HEATING LOAD (KBTU)	DRY-BULB TEMP	WET-BULB TEMP	HOURLY COOLING LOAD (KBTU)	SENSIBLE HEAT RATIO	DRY-BULB TEMP	WET-BULB TEMP
1	0.000	0.000	77.F	67.F	0.000	-4.F	-4.F	0.000	0.000	77.F	67.F
2	0.000	0.000	75.F	66.F	-178.801	-4.F	-4.F	0.000	0.000	75.F	66.F
3	0.000	0.000	74.F	65.F	0.000	-4.F	-4.F	0.000	0.000	74.F	65.F
4	0.000	0.000	72.F	64.F	-182.454	-4.F	-4.F	0.000	0.000	72.F	64.F
5	0.000	0.000	71.F	64.F	0.000	-3.F	-3.F	0.000	0.000	71.F	64.F
6	178.437 *	0.964	71.F	64.F	-183.025	-2.F	-2.F	178.437 *	0.964	71.F	64.F
7	166.582 *	0.962	71.F	63.F	0.000	-1.F	-1.F	166.582 *	0.962	71.F	63.F
8	160.428 *	0.928	71.F	64.F	-454.447	0.F	0.F	160.428 *	0.928	71.F	64.F
9	165.387 *	0.928	74.F	64.F	-305.233	1.F	1.F	165.387 *	0.928	74.F	64.F
10	173.594 *	0.925	77.F	66.F	-244.819	2.F	2.F	173.594 *	0.925	77.F	66.F
11	180.833 *	0.925	81.F	67.F	-212.502	3.F	3.F	180.833 *	0.925	81.F	67.F
12	187.542 *	0.928	84.F	69.F	-189.837	4.F	4.F	187.542 *	0.928	84.F	69.F
13	201.795 *	0.910	88.F	71.F	-175.410	5.F	5.F	201.795 *	0.910	88.F	71.F
14	211.104 *	0.899	90.F	72.F	-154.956	5.F	5.F	211.104 *	0.899	90.F	72.F
15	217.218 *	0.895	91.F	72.F	-140.301	6.F	6.F	217.218 *	0.895	91.F	72.F
16	218.057 *	0.893	90.F	72.F	-134.147	5.F	5.F	218.057 *	0.893	90.F	72.F
17	213.977 *	0.892	90.F	72.F	-135.070	5.F	5.F	213.977 *	0.892	90.F	72.F
18	0.000	0.000	89.F	72.F	-134.246	4.F	4.F	0.000	0.000	89.F	72.F
19	0.000	0.000	88.F	71.F	0.000	3.F	3.F	0.000	0.000	88.F	71.F
20	0.000	0.000	86.F	71.F	0.000	1.F	2.F	0.000	0.000	86.F	71.F
21	0.000	0.000	84.F	70.F	0.000	0.F	0.F	0.000	0.000	84.F	70.F
22	0.000	0.000	83.F	69.F	0.000	-1.F	-1.F	0.000	0.000	83.F	69.F
23	0.000	0.000	81.F	68.F	0.000	-3.F	-2.F	0.000	0.000	81.F	68.F
24	0.000	0.000	79.F	67.F	0.000	-4.F	-3.F	0.000	0.000	79.F	67.F
SUM	--------				--------			---------			
MAX	218.057				-454.447			2274.955			

SYSTEM-TYPE	VAVS	SQFT/TON	275.2
COOLING PEAK	43.61 (BTU/HR- SQFT)	HEATING PEAK	-90.89 (BTU/HR- SQFT)
SUPPLY AIR PEAK FLOW	1.27 (CFM/SQFT)	MIN-OA/PERSON	20.40 (CFM)
OA FRAC AT CLG PEAK	0.167	OA FRAC AT HTG PEAK	0.222

* ASTERISKS INDICATE HOURS LOADS NOT MET

	-----COOLING-----				---HEATING---			DAY COOLING PEAK			
	JUL 8				JAN 7			JUL 8			
HOUR	HOURLY COOLING LOAD (KBTU)	SENSIBLE HEAT RATIO	DRY-BULB TEMP	WET-BULB TEMP	HOURLY HEATING LOAD (KBTU)	DRY-BULB TEMP	WET-BULB TEMP	HOURLY COOLING LOAD (KBTU)	SENSIBLE HEAT RATIO	DRY-BULB TEMP	WET-BULB TEMP
1	0.000	0.000	76.F	68.F	0.000	6.F	6.F	0.000	0.000	76.F	68.F
2	0.000	0.000	76.F	68.F	-146.914	4.F	4.F	0.000	0.000	76.F	68.F
3	0.000	0.000	75.F	68.F	0.000	2.F	2.F	0.000	0.000	75.F	68.F
4	0.000	0.000	74.F	68.F	-155.152	2.F	2.F	0.000	0.000	74.F	68.F
5	0.000	0.000	73.F	67.F	0.000	2.F	2.F	0.000	0.000	73.F	67.F
6	0.000	0.000	72.F	67.F	-163.423	1.F	1.F	0.000	0.000	72.F	67.F
7	164.625 *	0.913	72.F	67.F	0.000	0.F	0.F	164.625 *	0.913	72.F	67.F
8	184.814 *	0.860	77.F	70.F	-441.109	-1.F	-1.F	184.814 *	0.860	77.F	70.F
9	182.204 *	0.855	83.F	72.F	-287.347	0.F	0.F	182.204 *	0.855	83.F	72.F
10	193.900 *	0.841	86.F	74.F	-233.795	2.F	1.F	193.900 *	0.841	86.F	74.F
11	196.262 *	0.865	89.F	74.F	-198.142	4.F	3.F	196.262 *	0.865	89.F	74.F
12	193.265 *	0.901	90.F	73.F	-167.741	6.F	5.F	193.265 *	0.901	90.F	73.F
13	202.205 *	0.898	91.F	73.F	-149.663	8.F	6.F	202.205 *	0.898	91.F	73.F
14	208.722 *	0.900	92.F	73.F	-128.669	9.F	7.F	208.722 *	0.900	92.F	73.F
15	214.902 *	0.883	92.F	74.F	-112.424	10.F	8.F	214.902 *	0.883	92.F	74.F
16	205.470	0.905	93.F	73.F	-106.730	9.F	7.F	205.470	0.905	93.F	73.F
17	201.179	0.903	93.F	73.F	-107.148	8.F	6.F	201.179	0.903	93.F	73.F
18	0.000	0.000	92.F	73.F	-115.849	5.F	4.F	0.000	0.000	92.F	73.F
19	0.000	0.000	90.F	72.F	0.000	4.F	3.F	0.000	0.000	90.F	72.F
20	0.000	0.000	83.F	70.F	0.000	2.F	1.F	0.000	0.000	83.F	70.F
21	0.000	0.000	82.F	68.F	0.000	3.F	2.F	0.000	0.000	82.F	68.F
22	0.000	0.000	82.F	70.F	0.000	4.F	3.F	0.000	0.000	82.F	70.F
23	0.000	0.000	82.F	70.F	0.000	4.F	3.F	0.000	0.000	82.F	70.F
24	0.000	0.000	80.F	69.F	0.000	5.F	4.F	0.000	0.000	80.F	69.F
	---				---			---			
SUM								2147.547			
MAX	214.902				-441.109						

SYSTEM-TYPE	VAVS	SQFT/TON	279.2
COOLING PEAK	42.98 (BTU/HR- SQFT)	HEATING PEAK	-88.22 (BTU/HR- SQFT)
SUPPLY AIR PEAK FLOW	1.27 (CFM/SQFT)	MIN-OA/PERSON	20.40 (CFM)
OA FRAC AT CLG PEAK	0.172	OA FRAC AT HTG PEAK	0.230

* ASTERISKS INDICATE HOURS LOADS NOT MET

SIMPLE STRUCTURE RUN 3, CHICAGO DIVIDE INTO ZONES; ADD PLENUM DOE-2.1E-001 Thu Nov 4 16:29:40 1993SDL RUN 1
DESIGN-DAY SIZING OF VAV SYSTEM SHOW ALL REPORTS
REPORT- SS-K SPACE TEMPERATURE SUMMARY SYST-1 WEATHER FILE- TRY CHICAGO

MONTH	AVERAGE SPACE TEMP ALL HOURS (F)	COOLING HOURS (F)	HEATING HOURS (F)	FAN ON HOURS (F)	FAN OFF HOURS (F)	AVERAGE TEMPERATURE DIFFERENCE BETWEEN OUTDOOR& ROOM AIR ALL HOURS (F)	BETWEEN OUTDOOR& ROOM AIR FAN ON HOURS (F)	BETWEEN OUTDOOR& ROOM AIR FAN OFF HOURS (F)	SUMMED TEMP DIFFERENCE BETWEEN OUTDOOR& ROOM AIR HEATING HOURS (F)	BETWEEN OUTDOOR& ROOM AIR ALL HOURS (F)	HUMIDITY RATIO DIFFERENCE BETWEEN OUTDOOR AND ROOM AIR (FRAC.OR MULT.)
JAN	62.16		65.65	65.65	59.74	-36.82	-40.46	-34.29	514.20	1141.49	-0.00103
FEB	62.36		66.19	66.19	60.00	-34.84	-38.08	-32.85	406.20	975.57	-0.00091
MAR	65.34		68.59	68.71	63.66	-26.97	-30.75	-25.09	311.82	840.66	-0.00110
APR	71.74	74.21	70.63	72.68	71.31	-20.15	-19.85	-20.29	116.27	607.26	-0.00082
MAY	75.54	77.37	71.89	75.96	75.36	-18.76	-15.96	-19.94	41.85	583.60	-0.00072
JUN	79.66	78.22		78.16	80.27	-12.57	-6.37	-15.07		387.11	-0.00075
JUL	82.88	79.19		79.19	84.65	-7.31	-1.39	-10.15		289.98	0.00127
AUG	80.77	78.62		78.62	81.79	-8.93	-2.62	-11.89		310.85	0.00056
SEP	77.10	77.70	71.08	76.84	77.21	-15.72	-9.76	-18.09	12.59	482.64	-0.00109
OCT	71.86	74.74	70.77	73.07	71.34	-18.22	-15.71	-19.30	86.06	564.90	-0.00107
NOV	66.11	76.39	69.27	69.92	64.54	-25.16	-29.14	-23.53	240.00	754.84	-0.00068
DEC	62.48		66.48	66.48	60.13	-30.75	-34.66	-28.45	398.62	953.37	-0.00099
ANNUAL	71.55	77.78	67.66	72.23	71.23	-21.27	-21.42	-21.20	2127.60	7892.27	-0.00061

SIMPLE STRUCTURE RUN 3, CHICAGO DIVIDE INTO ZONES; ADD PLENUM DOE-2.1E-001 Thu Nov 4 16:29:40 1993SDL RUN 1
DESIGN-DAY SIZING OF VAV SYSTEM SHOW ALL REPORTS
REPORT- SS-L FAN ELECTRIC ENERGY SYST-1 WEATHER FILE- TRY CHICAGO

MONTH	FAN ELEC DURING HEATING (KWH)	FAN ELEC DURING COOLING (KWH)	FAN ELEC DURING HEAT & COOL (KWH)	FAN ELEC DURING FLOATING (KWH)	Number of hours within each PART LOAD range 00 10	10 20	20 30	30 40	40 50	50 60	60 70	70 80	80 90	90 100	100 +	TOTAL RUN HOURS
JAN	256.361	0.000	0.000	0.000	0	0	0	286	10	4	4	1	0	0	0	305
FEB	214.658	0.000	0.000	0.000	0	0	0	239	10	3	3	1	0	0	0	256
MAR	188.892	0.000	0.000	5.833	0	0	0	242	3	1	2	0	0	0	0	248
APR	77.282	59.311	0.000	45.241	0	0	0	216	11	2	1	0	0	0	0	229
MAY	29.165	172.787	0.000	61.428	0	0	0	144	45	27	4	0	0	0	0	220
JUN	0.000	465.212	0.000	3.377	0	0	0	23	49	80	51	4	0	0	0	207
JUL	0.000	957.790	0.000	0.000	0	0	0	1	9	35	72	66	29	28	1	241
AUG	0.000	723.851	0.000	0.000	0	0	0	9	24	62	91	40	12	0	0	238
SEP	9.505	303.856	0.000	32.739	0	0	0	88	45	37	32	3	0	0	0	205
OCT	63.882	77.672	0.729	31.766	0	0	0	224	1	0	0	0	0	0	0	225
NOV	148.524	13.215	0.000	8.918	0	0	0	200	5	2	2	0	0	0	0	209
DEC	230.728	0.000	0.000	0.000	0	0	0	259	11	0	6	0	0	0	0	276
ANNUAL	1218.994	2773.703	0.729	189.301	0	0	0	1931	223	253	267	115	41	28	1	2859

TOTAL HOURS AT RELATIVE HUMIDITY LEVEL AND TIME OF DAY

HOUR	1AM	2	3	4	5	6	7	8	9	10	11	12	1PM	2	3	4	5	6	7	8	9	10	11	12	TOTAL
80-100	0	0	0	0	0	0	0	0	0	0	0	0	0	0	1	0	0	0	0	0	0	0	0	0	1
70-80	0	0	0	0	0	0	0	0	1	0	0	0	0	1	0	1	1	0	0	0	0	0	0	0	4
60-70	0	0	0	0	0	0	0	6	5	5	5	4	4	2	2	3	3	3	0	0	0	0	0	0	42
50-60	0	0	0	0	0	0	0	45	58	57	53	32	33	29	28	34	35	4	0	0	0	0	0	0	408
40-50	0	0	0	0	0	0	0	42	43	45	41	60	61	69	66	59	61	9	0	0	0	0	0	0	556
30-40	0	0	0	0	0	0	0	26	62	61	57	49	38	48	52	55	51	27	0	0	0	0	0	0	526
0-30	0	0	0	0	0	0	0	7	83	84	96	107	116	103	103	100	101	83	0	0	0	0	0	0	983

	COOLING					HEATING					ELEC	
MONTH	COOLING ENERGY (MBTU)	TIME OF MAX DY	TIME OF MAX HR	DRY-BULB TEMP	WET-BULB TEMP	MAXIMUM COOLING LOAD (KBTU/HR)	HEATING ENERGY (MBTU)	TIME OF MAX DY	TIME OF MAX HR	DRY-BULB TEMP	WET-BULB TEMP	MAXIMUM HEATING LOAD (KBTU/HR)	ELECTRICAL ENERGY (KWH)	MAXIMUM ELEC LOAD (KW)
JAN	0.00000					0.000	-4.040	7	8	-1.F	-1.F	-71.992	596.	2.429
FEB	0.00000					0.000	-3.251	4	8	7.F	6.F	-70.902	518.	2.429
MAR	0.00000					0.000	-2.057	25	8	14.F	12.F	-65.053	572.	2.429
APR	0.00000					0.000	-0.553	1	8	43.F	39.F	-45.566	593.	2.429
MAY	0.00000					0.000	-0.034	13	9	47.F	43.F	-8.113	596.	2.429
JUN	0.00000					0.000	0.000					0.000	546.	2.429
JUL	0.00000					0.000	0.000					0.000	596.	2.429
AUG	0.00000					0.000	0.000					0.000	596.	2.429
SEP	0.00000					0.000	-0.030	23	8	36.F	34.F	-17.036	546.	2.429
OCT	0.00000					0.000	-0.265	21	8	30.F	29.F	-43.523	596.	2.429
NOV	0.00000					0.000	-1.979	18	8	34.F	34.F	-58.601	522.	2.429
DEC	0.00000					0.000	-3.595	26	8	15.F	15.F	-66.874	572.	2.429
TOTAL	0.000						-15.804						6849.	
MAX						0.000						-71.992		2.429

	----DEMANDS-----		--BASEBOARDS---		--TEMPERATURES--		--LOADS NOT MET--	
MONTH	HEAT EXTRACTION ENERGY (MBTU)	HEAT ADDITION ENERGY (MBTU)	BASEBOARD ENERGY (MBTU)	MAXIMUM BASEBOARD LOAD (KBTU/HR)	MAXIMUM ZONE TEMP (F)	MINIMUM ZONE TEMP (F)	HOURS UNDER HEATED	HOURS UNDER COOLED
JAN	0.32026	-3.393	0.00000	0.000	76.3	55.8	0	0
FEB	0.31210	-2.703	0.00000	0.000	76.1	55.8	0	0
MAR	0.62230	-1.443	0.00000	0.000	75.4	55.9	0	0
APR	1.70057	-0.336	0.00000	0.000	77.7	67.0	7	0
MAY	2.46513	-0.006	0.00000	0.000	77.9	70.9	0	0
JUN	3.35010	0.000	0.00000	0.000	78.3	75.1	0	0
JUL	5.25626	0.000	0.00000	0.000	79.1	76.7	0	0
AUG	4.63841	0.000	0.00000	0.000	78.9	76.5	0	0
SEP	3.21619	-0.015	0.00000	0.000	78.6	70.7	0	0
OCT	1.96739	-0.144	0.00000	0.000	77.9	70.3	0	0
NOV	0.62700	-1.258	0.00000	0.000	77.9	55.9	0	0
DEC	0.16774	-2.819	0.00000	0.000	75.2	55.8	0	0

TOTAL HOURS AT TEMPERATURE LEVEL AND TIME OF DAY

HOUR	1AM	2	3	4	5	6	7	8	9	10	11	12	1PM	2	3	4	5	6	7	8	9	10	11	12	TOTAL
ABOVE 85	0	0	0	0	0	0	0	0	0	0	0	0	0	0	0	0	0	0	0	0	0	0	0	0	0
80-85	0	0	0	0	0	0	0	0	0	0	0	0	0	0	0	0	0	0	0	0	0	0	0	0	0
75-80	0	0	0	0	0	0	0	88	90	96	100	106	119	132	141	144	139	15	0	0	0	0	0	0	1170
70-75	0	0	0	0	0	0	0	38	162	156	152	145	132	119	110	107	112	110	0	0	0	0	0	0	1343
65-70	0	0	0	0	0	0	0	0	0	0	0	1	1	1	1	1	1	1	0	0	0	0	0	0	7
60-65	0	0	0	0	0	0	0	0	0	0	0	0	0	0	0	0	0	0	0	0	0	0	0	0	0
BELOW 60	0	0	0	0	0	0	0	0	0	0	0	0	0	0	0	0	0	0	0	0	0	0	0	0	0

MMDDHH	GLOBAL DRY BULB TEMP F	GLOBAL WET BULB TEMP F	SPACE1-1 THERMOST SETPOINT F	SPACE1-1 ZONE TEMP F	SPACE1-1 EXTRACTN RATE BTU/HR	SYST-1 CLG COIL AIR TEMP F	SYST-1 RETURN AIR TEMP F	SYST-1 TOT CLG COIL PWR BTU/HR
	----(8)	----(7)	----(7)	----(6)	----(8)	----(2)	----(4)	----(6)
8 5 1	77.2	67.0	-999.0	96.6	0.	0.0	0.0	0.
8 5 2	75.4	66.1	-999.0	96.0	0.	0.0	0.0	0.
8 5 3	73.9	65.4	-999.0	95.5	0.	0.0	0.0	0.
8 5 4	72.7	64.7	-999.0	95.0	0.	0.0	0.0	0.
8 5 5	71.8	64.2	-999.0	94.5	0.	0.0	0.0	0.
8 5 6	71.2	63.9	78.0	80.9	48692.	58.5	87.5	178437.
8 5 7	71.0	63.8	78.0	80.1	36040.	58.3	85.0	166582.
8 5 8	71.8	64.0	78.0	79.7	35092.	58.2	82.6	160428.
8 5 9	73.9	64.8	78.0	79.3	34929.	58.0	82.7	165387.
8 510	77.2	66.2	78.0	79.0	34343.	57.9	83.4	173594.
8 511	81.0	67.8	78.0	79.0	33277.	58.0	84.2	180833.
8 512	84.8	69.5	78.0	78.9	32766.	58.0	85.2	187542.
8 513	88.1	71.1	78.0	79.1	33921.	57.9	86.0	201795.
8 514	90.2	72.2	78.0	79.7	34452.	58.0	86.7	211104.
8 515	91.0	72.7	78.0	79.9	35136.	58.0	87.2	217218.
8 516	90.8	72.8	78.0	79.9	35286.	58.0	87.3	218057.
8 517	90.2	72.6	78.0	79.7	35052.	58.0	86.9	213977.
8 518	89.3	72.3	-999.0	87.8	0.	0.0	0.0	0.
8 519	88.1	71.8	-999.0	88.8	0.	0.0	0.0	0.
8 520	86.6	71.2	-999.0	89.2	0.	0.0	0.0	0.
8 521	84.8	70.4	-999.0	88.9	0.	0.0	0.0	0.
8 522	83.0	69.6	-999.0	88.6	0.	0.0	0.0	0.
8 523	81.0	68.8	-999.0	88.3	0.	0.0	0.0	0.
8 524	79.0	67.9	-999.0	88.0	0.	0.0	0.0	0.
DAILY SUMMARY (AUG 5)								
MN	71.0	63.8	-999.0	78.9	0.	0.0	0.0	0.
MX	91.0	72.8	78.0	96.6	48692.	58.5	87.5	218057.
SM	1944.0	1640.8	-11052.0	2052.5	428985.	696.7	1024.7	2274955.
AV	81.0	68.4	-460.5	85.5	17874.	29.0	42.7	94790.
MONTHLY SUMMARY (AUG)								
MN	71.0	63.8	-999.0	78.9	0.	0.0	0.0	0.
MX	91.0	72.8	78.0	96.6	48692.	58.5	87.5	218057.
SM	1944.0	1640.8	-11052.0	2052.5	428985.	696.7	1024.7	2274955.
AV	81.0	68.4	-460.5	85.5	17874.	29.0	42.7	94790.
YEARLY SUMMARY								
MN	71.0	63.8	-999.0	78.9	0.	0.0	0.0	0.
MX	91.0	72.8	78.0	96.6	48692.	58.5	87.5	218057.
SM	1944.0	1640.8	-11052.0	2052.5	428985.	696.7	1024.7	2274955.
AV	81.0	68.4	-460.5	85.5	17874.	29.0	42.7	94790.

	GLOBAL DRY BULB TEMP F	GLOBAL WET BULB TEMP F	SPACE1-1 THERMOST SETPOINT F	SPACE1-1 ZONE TEMP F	SPACE1-1 EXTRACTN RATE BTU/HR	SYST-1 CLG COIL AIR TEMP F	SYST-1 RETURN AIR TEMP F	SYST-1 TOT CLG COIL PWR BTU/HR
	----(8)	----(7)	----(7)	----(6)	----(8)	----(2)	----(4)	----(6)
8 5 1	61.0	59.0	-999.0	80.5	0.	0.0	0.0	0.
8 5 2	59.0	58.0	-999.0	80.1	0.	0.0	0.0	0.
8 5 3	57.0	56.0	-999.0	79.6	0.	0.0	0.0	0.
8 5 4	57.0	56.0	-999.0	79.2	0.	0.0	0.0	0.
8 5 5	55.0	54.0	-999.0	78.7	0.	0.0	0.0	0.
8 5 6	52.0	50.0	-999.0	78.4	0.	0.0	0.0	0.
8 5 7	57.0	54.0	-999.0	78.3	0.	0.0	0.0	0.
8 5 8	62.0	58.0	78.0	77.1	11085.	58.5	71.4	11565.
8 5 9	68.0	61.0	78.0	77.1	12717.	57.3	74.8	52275.
8 510	72.0	63.0	78.0	77.3	14571.	57.9	77.4	70249.
8 511	74.0	64.0	78.0	77.5	16788.	57.8	80.4	86804.
8 512	76.0	63.0	78.0	77.7	18073.	57.8	83.1	92040.
8 513	77.0	63.0	78.0	77.9	21113.	57.6	84.9	108793.
8 514	78.0	63.0	78.0	78.2	23954.	57.7	85.7	120845.
8 515	77.0	62.0	78.0	78.3	25580.	57.8	86.0	124485.
8 516	76.0	62.0	78.0	78.3	25080.	57.9	85.9	119886.
8 517	77.0	62.0	78.0	78.2	23640.	57.9	85.2	114577.
8 518	76.0	61.0	-999.0	83.2	0.	0.0	0.0	0.
8 519	75.0	61.0	-999.0	83.7	0.	0.0	0.0	0.
8 520	72.0	59.0	-999.0	83.7	0.	0.0	0.0	0.
8 521	69.0	58.0	-999.0	83.2	0.	0.0	0.0	0.
8 522	68.0	57.0	-999.0	82.8	0.	0.0	0.0	0.
8 523	67.0	58.0	-999.0	82.5	0.	0.0	0.0	0.
8 524	66.0	57.0	-999.0	82.0	0.	0.0	0.0	0.
DAILY SUMMARY (AUG 5)								
MN	52.0	50.0	-999.0	77.1	0.	0.0	0.0	0.
MX	78.0	64.0	78.0	83.7	25580.	58.5	86.0	124485.
SM	1628.0	1419.0	-13206.0	1913.5	192601.	578.1	814.8	901518.
AV	67.8	59.1	-550.2	79.7	8025.	24.1	33.9	37563.
MONTHLY SUMMARY (AUG)								
MN	52.0	50.0	-999.0	77.1	0.	0.0	0.0	0.
MX	78.0	64.0	78.0	83.7	25580.	58.5	86.0	124485.
SM	1628.0	1419.0	-13206.0	1913.5	192601.	578.1	814.8	901518.
AV	67.8	59.1	-550.2	79.7	8025.	24.1	33.9	37563.
YEARLY SUMMARY								
MN	52.0	50.0	-999.0	77.1	0.	0.0	0.0	0.
MX	78.0	64.0	78.0	83.7	25580.	58.5	86.0	124485.
SM	1628.0	1419.0	-13206.0	1913.5	192601.	578.1	814.8	901518.
AV	67.8	59.1	-550.2	79.7	8025.	24.1	33.9	37563.

EQUIPMENT	SIZE (MBTU/H)	NUMBER INSTD	NUMBER AVAIL	SIZE (MBTU/H)	NUMBER INSTD	NUMBER AVAIL	SIZE (MBTU/H)	NUMBER INSTD	NUMBER AVAIL	SIZE (MBTU/H)	NUMBER INSTD	NUMBER AVAIL	SIZE (MBTU/H)	NUMBER INSTD	NUMBER AVAIL	SIZE (MBTU/H)	NUMBER INSTD	NUMBER AVAIL
HW-BOILER	0.457	1	1															
HERM-REC-CHLR	0.222	1	1															

EQUIPMENT	SIZE (MBTU)	UNIT COST (K$)	INSTALD COST FACTOR	CONSUM-ABLES ($/HR)	MAINTA-NANCE (HRS/YR)	EQPMT LIFE (HRS)	HOURS ALREADY USED	HRS TO MINOR OVHAUL	MINOR OVHAUL COST ($)	HRS TO MAJOR OVHAUL	MAJOR OVHAUL COST ($)
HW-BOILER	40.000	300.000	1.400	0.000	8.0	220000.	0.	10000.	2000.	50000.	25000.
HERM-REC-CHLR	12.000	100.000	1.200	0.000	16.0	100000.	0.	20000.	5000.	50000.	15000.

EQUIPMENT	SIZE (MBTU)	UNIT COST (K$)	INSTALD COST FACTOR	CONSUM-ABLES ($/HR)	MAINTA-NANCE (HRS/YR)	EQPMT LIFE (HRS)	HOURS ALREADY USED	HRS TO MINOR OVHAUL	MINOR OVHAUL COST ($)	HRS TO MAJOR OVHAUL	MAJOR OVHAUL COST ($)
HW-BOILER	0.457	15.003	1.400	0.000	3.3	140687.	0.	4089.	100.	20447.	1250.
HERM-REC-CHLR	0.222	6.911	1.200	0.000	7.2	67112.	0.	9008.	346.	22520.	1037.

EQUIPMENT	PART LOAD RATIOS MINIMUM	MAXIMUM	OPTIMUM	ELECTRIC INPUT TO NOMINAL CAPACITY RATIO (BTU/BTU)
HW-BOILER	0.2500	1.2000	1.0000	0.0220
HERM-REC-CHLR	0.2500	1.0000	1.0000	0.2740

N A M E	COEFF 1	COEFF 2	COEFF 3	COEFF 4	COEFF 5	COEFF 6
STM-BOILER-HIR-F	0.082597	0.996764	-0.079361	0.000000	0.000000	0.000000
HW-BOILER-HIR-FP	0.082597	0.996764	-0.079361	0.000000	0.000000	0.000000
FURNACE-HIR-FPLR	0.018610	1.094209	-0.112819	0.000000	0.000000	0.000000
DHW-HIR-FPLR	0.021826	0.977630	0.000543	0.000000	0.000000	0.000000
OPEN-CENT-CAP-FT	-1.742040	0.029292	-0.000067	0.048054	-0.000291	-0.000106
OPEN-REC-CAP-FT	-4.161461	0.207050	-0.001931	0.004723	-0.000040	-0.000087
HERM-CENT-CAP-FT	-1.742040	0.029292	-0.000067	0.048054	-0.000291	-0.000106
HERM-REC-CAP-FT	-4.161461	0.207050	-0.001931	0.004723	-0.000040	-0.000087
OPEN-CENT-EIR-FT	3.117500	-0.109236	0.001389	0.003750	0.000150	-0.000375
OPEN-REC-EIR-FT	4.720965	-0.187504	0.002192	0.009209	0.000098	-0.000322
HERM-CENT-EIR-FT	3.117500	-0.109236	0.001389	0.003750	0.000150	-0.000375
HERM-REC-EIR-FT	4.720965	-0.187504	0.002192	0.009209	0.000098	-0.000322
OPEN-CENT-EIR-FP	0.222903	0.313387	0.463710	0.000000	0.000000	0.000000
OPEN-REC-EIR-FPL	0.088065	1.137742	-0.225806	0.000000	0.000000	0.000000
HERM-CENT-EIR-FP	0.222903	0.313387	0.463710	0.000000	0.000000	0.000000
HERM-REC-EIR-FPL	0.088065	1.137742	-0.225806	0.000000	0.000000	0.000000
DBUN-CAP-FT	-1.742040	0.029292	-0.000067	0.048054	-0.000291	-0.000106
DBUN-EIR-FT	3.117500	-0.109236	0.001389	0.003750	0.000150	-0.000375
DBUN-EIR-FPLR	0.349032	0.263871	0.387097	0.000000	0.000000	0.000000
DBUN-CAP-FTRISE	1.000000	-0.005650	-0.000305	0.000000	0.000000	0.000000
DBUN-EIR-FTRISE	1.000000	0.012250	0.000175	0.000000	0.000000	0.000000
ABSOR1-CAP-FT	0.723412	0.079006	-0.000897	-0.025285	-0.000048	0.000276
ABSOR2-CAP-FT	-0.816039	-0.038707	0.000450	0.071491	-0.000636	0.000312
ABSORG-CAP-FT	1.000000	0.000000	0.000000	0.000000	0.000000	0.000000
ABSORS-CAP-FT	0.000000	0.000000	0.000000	0.000000	0.000000	0.000000
ABSORS-CAP-FTS	0.000000	0.000000	0.000000	0.000000	0.000000	0.000000
ABSOR1-HIR-FT	0.652273	0.000000	0.000000	-0.000545	0.000055	0.000000
ABSOR2-HIR-FT	1.658750	0.000000	0.000000	-0.029000	0.000250	0.000000
ABSORG-HIR-FT	4.428713	-0.132986	0.001253	0.000000	0.000000	0.000000
ABSORS-HIR-FT	0.000000	0.000000	0.000000	0.000000	0.000000	0.000000
ABSORS-HIR-FTS	0.000000	0.000000	0.000000	0.000000	0.000000	0.000000
ABSOR1-HIR-FPLR	0.087773	0.744921	0.167306	0.000000	0.000000	0.000000
ABSOR2-HIR-FPLR	0.135512	0.617981	0.246513	0.000000	0.000000	0.000000
ABSORG-HIR-FPLR	0.135512	0.617981	0.246513	0.000000	0.000000	0.000000
ABSORS-HIR-FPLR	0.000000	0.000000	0.000000	0.000000	0.000000	0.000000
TWR-GPM-FRA	-2.228889	0.166795	-0.014102	0.032223	0.185602	0.242519
TWR-GPM-FWB	0.605314	-0.035545	0.008041	-0.028603	0.000250	0.004909
TWR-FAN-FPLR	0.331629	-0.885676	0.605565	0.948482	0.000000	0.000000
**	0.000000	0.000000	0.000000	0.000000	0.000000	0.000000
DIESEL-I/O-FPLR	0.107000	0.893000	0.000000	0.000000	0.000000	0.000000
DIESEL-EXH-FPLR	0.024516	0.332387	0.643097	0.000000	0.000000	0.000000
DIESEL-JCLB-FPLR	0.287936	1.020452	-0.308387	0.000000	0.000000	0.000000
**	0.000000	0.000000	0.000000	0.000000	0.000000	0.000000
**	0.000000	0.000000	0.000000	0.000000	0.000000	0.000000
**	0.000000	0.000000	0.000000	0.000000	0.000000	0.000000
GTURB-I/O-FPLR	0.442979	0.397400	0.156962	0.000000	0.000000	0.000000
GTURB-EXH-FPLR	0.295626	0.493019	0.211355	0.000000	0.000000	0.000000
**	0.000000	0.000000	0.000000	0.000000	0.000000	0.000000
GTURB-CAP-FT	1.240000	-0.004100	0.000000	0.000000	0.000000	0.000000
**	0.000000	0.000000	0.000000	0.000000	0.000000	0.000000
STURB-ENTH-FPLX	38.792358	-0.211386	0.000529	1.020087	0.000917	-0.003499
STURB-I/O-FPLR	0.488308	0.994154	-0.482462	0.000000	0.000000	0.000000

N A M E	COEFF 1	COEFF 2	COEFF 3	COEFF 4	COEFF 5	COEFF 6
TC-CHLR-CAP-FT	-0.351443	0.056583	-0.000054	-0.045625	-0.000043	-0.000012
ABSORG-HIR1-FTI	0.861737	-0.007089	0.000103	0.000000	0.000000	0.000000
ABSORG-HIR2-FTI	0.814450	0.000824	0.000013	0.000000	0.000000	0.000000
ABSORG-QCOND-FTI	0.640000	-0.001300	0.000000	0.000000	0.000000	0.000000
ABSG-HCAP-FQC	0.863599	-1.304953	0.441353	0.000000	0.000000	0.000000
ENG-CH-CAP-FT	0.573597	0.018680	0.000000	-0.004653	0.000000	0.000000
ENG-CH-COP-FPLR1	1.143357	0.022890	0.000000	0.000000	0.000000	0.000000
ENG-CH-COP-FPLR2	1.388614	-0.388614	0.000000	0.000000	0.000000	0.000000
ENG-CH-COP-FT	1.236238	0.016892	0.000000	-0.011524	0.000000	0.000000
ENG-CH-HREJ-FPLR	1.052699	-0.052699	0.000000	0.000000	0.000000	0.000000
ENG-CH-HREJ-FT	0.705841	0.003461	0.000000	0.000000	0.000000	0.000000
ENG-CH-COP-FPLRS	0.380200	2.360900	0.000000	0.000000	0.000000	0.000000
ENG-CH-COP-FTS	1.088152	0.014106	0.000000	-0.008339	0.000000	0.000000

	SITE ENERGY												SOURCE
	2	3	4	5	6	7	8	9	10	11	12	13	14
MONTH	TOTAL HEAT LOAD (MBTU)	TOTAL COOLING LOAD (MBTU)	TOTAL ELECTR LOAD (MWH)	RCVRED ENERGY (MBTU)	WASTED RCVRABL ENERGY (MBTU)	FUEL INPUT COOLING (MBTU)	ELEC INPUT COOLING (MWH)	FUEL INPUT HEATING (MBTU)	ELEC INPUT HEATING (MWH)	FUEL INPUT ELECT (MBTU)	TOTAL FUEL INPUT (MBTU)	TOTAL SITE ENERGY (MBTU)	TOTAL SOURCE ENERGY (MBTU)
JAN	33.5	0.0	3.9	0.0	0.0	0.0	0.0	51.6	0.8	0.0	51.6	64.9	91.7
FEB	26.0	0.0	3.3	0.0	0.0	0.0	0.0	40.2	0.7	0.0	40.2	51.5	74.3
MAR	15.9	0.0	3.4	0.0	0.0	0.0	0.0	25.0	0.5	0.0	25.0	36.5	59.6
APR	4.0	1.8	3.4	0.0	0.0	0.0	0.3	6.4	0.1	0.0	6.4	18.0	41.4
MAY	0.5	5.6	3.9	0.0	0.0	0.0	0.7	0.9	0.0	0.0	0.9	14.0	40.4
JUN	0.0	15.4	4.9	0.0	0.0	0.0	1.9	0.0	0.0	0.0	0.0	16.8	50.5
JUL	0.0	29.8	7.0	0.0	0.0	0.0	3.2	0.0	0.0	0.0	0.0	23.9	71.6
AUG	0.0	24.7	6.4	0.0	0.0	0.0	2.8	0.0	0.0	0.0	0.0	21.7	65.0
SEP	0.3	9.9	4.2	0.0	0.0	0.0	1.3	0.4	0.0	0.0	0.4	14.8	43.4
OCT	2.5	2.7	3.5	0.0	0.0	0.0	0.4	3.9	0.1	0.0	3.9	15.9	40.0
NOV	13.6	0.4	3.1	0.0	0.0	0.0	0.1	21.3	0.4	0.0	21.3	31.9	53.0
DEC	26.6	0.0	3.7	0.0	0.0	0.0	0.0	41.5	0.7	0.0	41.5	53.9	78.9
TOTAL	122.8	90.5	50.6	0.0	0.0	0.0	10.7	191.1	3.4	0.0	191.1	363.9	709.7

MONTH	BTU/UNIT:	ELECTRICITY METER-1 3413./KWH	NATURAL-GAS METER-1 100000./THERMS
JAN			
ENERGY CONSUMPTION (UNITS/MO)		3918.1	515.5
PEAK DEMAND (UNITS/HR OR DAY)		16.2	5.6
	PEAK DAY/HR	7/ 9	7/ 8
FEB			
ENERGY CONSUMPTION (UNITS/MO)		3333.6	401.5
PEAK DEMAND (UNITS/HR OR DAY)		16.1	5.3
	PEAK DAY/HR	4/ 9	4/ 8
MAR			
ENERGY CONSUMPTION (UNITS/MO)		3377.5	250.2
PEAK DEMAND (UNITS/HR OR DAY)		15.8	4.9
	PEAK DAY/HR	25/ 9	25/ 8
APR			
ENERGY CONSUMPTION (UNITS/MO)		3417.1	63.8
PEAK DEMAND (UNITS/HR OR DAY)		22.2	3.4
	PEAK DAY/HR	29/15	8/ 8
MAY			
ENERGY CONSUMPTION (UNITS/MO)		3857.1	8.8
PEAK DEMAND (UNITS/HR OR DAY)		28.4	0.7
	PEAK DAY/HR	21/14	9/ 9
JUN			
ENERGY CONSUMPTION (UNITS/MO)		4933.9	0.0
PEAK DEMAND (UNITS/HR OR DAY)		33.8	0.0
	PEAK DAY/HR	20/16	0/ 0
JUL			
ENERGY CONSUMPTION (UNITS/MO)		6989.9	0.0
PEAK DEMAND (UNITS/HR OR DAY)		39.2	0.0
	PEAK DAY/HR	8/15	0/ 0
AUG			
ENERGY CONSUMPTION (UNITS/MO)		6351.4	0.0
PEAK DEMAND (UNITS/HR OR DAY)		36.0	0.0
	PEAK DAY/HR	19/16	0/ 0
SEP			
ENERGY CONSUMPTION (UNITS/MO)		4196.0	4.4
PEAK DEMAND (UNITS/HR OR DAY)		30.7	1.7
	PEAK DAY/HR	11/15	23/ 8
OCT			
ENERGY CONSUMPTION (UNITS/MO)		3519.4	39.2
PEAK DEMAND (UNITS/HR OR DAY)		19.8	3.6
	PEAK DAY/HR	31/15	21/ 8
NOV			
ENERGY CONSUMPTION (UNITS/MO)		3098.8	212.8
PEAK DEMAND (UNITS/HR OR DAY)		21.1	4.3
	PEAK DAY/HR	1/15	25/ 8
DEC			
ENERGY CONSUMPTION (UNITS/MO)		3651.2	414.6
PEAK DEMAND (UNITS/HR OR DAY)		15.8	5.1
	PEAK DAY/HR	9/11	26/ 8
TOTAL			
ENERGY CONSUMPTION (UNITS/YR)		50644.1	1910.8
PEAK DEMAND (UNITS/HR OR DAY)		39.2	5.6

EQUIPMENT	HOURS AT PERCENT PART LOAD RATIO											TOTAL HOURS	ANNUAL LOAD (MBTU)	FALSE LOAD (MBTU)	ELEC USED (KWH)	THERMAL USED (MBTU)
	0 -- 10	-- 20	-- 30	-- 40	-- 50	-- 60	-- 70	-- 80	-- 90	-- 100	- 110+	-----	------	------	------	------
HW-BOILER	482	507	309	99	50	23	13	13	5	3	0	1504	122.8	0.0	2636.	191.1
	482	507	309	99	50	23	13	13	5	3	0					
HERM-REC-CHLR	194	164	136	178	180	126	80	40	25	9	0	1132	90.5	0.0	9851.	0.0
	194	164	136	178	180	126	80	40	25	9	0					

HOT LOOP CIRCULATION PUMP ELECTRICAL USE = 743. KWH
COLD LOOP CIRCULATION PUMP ELECTRICAL USE = 805. KWH
CONDENSER WATER PUMP ELECTRICAL USE = 0. KWH
TOWER OR CONDENSER FAN ELECTRICAL USE = 1661. KWH

NOTES TO TABLE
1) THE FIRST PART LOAD ENTRY FOR EACH PIECE OF EQUIPMENT IS THE HOURLY LOAD DIVIDED BY THE HOURLY OPERATING CAPACITY

2) THE SECOND PART LOAD ENTRY FOR EACH PIECE OF EQUIPMENT IS THE HOURLY LOAD DIVIDED BY THE TOTAL INSTALLED CAPACITY

HEATING LOADS	MBTU SUPPLIED	PCT OF TOTAL LOAD
HW-BOILER	122.8	100.0
LOAD SATISFIED	122.8	100.0
TOTAL LOAD ON PLANT	122.8	

COOLING LOADS	MBTU SUPPLIED	PCT OF TOTAL LOAD
HERM-REC-CHLR	90.5	100.0
LOAD SATISFIED	90.5	100.0
TOTAL LOAD ON PLANT	90.5	

ELECTRICAL LOADS	KWH SUPPLIED	PCT OF TOTAL LOAD
ELECTRICITY	50644.1	100.0
LOAD SATISFIED	50644.1	100.0
TOTAL LOAD ON PLANT	50642.9	

SUMMARY OF LOADS MET

TYPE OF LOAD	TOTAL LOAD (MBTU)	LOAD SATISFIED (MBTU)	TOTAL OVERLOAD (MBTU)	PEAK OVERLOAD (MBTU)	HOURS OVERLOADED
HEATING LOADS	122.8	122.8	0.000	0.000	0
COOLING LOADS	90.5	90.5	0.000	0.000	0
ELECTRICAL LOADS	172.8	172.8	0.000	0.000	0

SIMPLE STRUCTURE RUN 3, CHICAGO DIVIDE INTO ZONES; ADD PLENUM DOE-2.1E-001 Thu Nov 4 16:29:40 1993PDL RUN 1
DESIGN-DAY SIZING OF VAV SYSTEM SHOW ALL REPORTS
REPORT- PS-E MONTHLY ENERGY END-USE SUMMARY WEATHER FILE- TRY CHICAGO

ELECTRICAL END-USES IN KWH

	JAN	FEB	MAR	APR	MAY	JUN	JUL	AUG	SEP	OCT	NOV	DEC	TOTAL
AREA LIGHTS	1904.	1656.	1830.	1895.	1904.	1748.	1904.	1904.	1748.	1904.	1674.	1830.	21902.
MAX KW	7.5	7.5	7.5	7.5	7.5	7.5	7.5	7.5	7.5	7.5	7.5	7.5	7.5
DAY/HR	2/11	1/11	1/11	1/11	1/11	3/11	1/11	1/11	3/11	1/11	1/11	2/11	
MISC EQUIPMT	917.	795.	879.	915.	917.	838.	917.	917.	838.	917.	800.	879.	10528.
MAX KW	4.0	4.0	4.0	4.0	4.0	4.0	4.0	4.0	4.0	4.0	4.0	4.0	4.0
DAY/HR	2/ 9	1/ 9	1/ 9	1/ 9	1/ 9	3/ 9	1/ 9	1/ 9	3/ 9	1/ 9	1/ 9	2/ 9	
SPACE HEAT	690.	542.	355.	93.	14.	0.	0.	0.	7.	58.	301.	575.	2636.
MAX KW	2.9	2.9	2.9	2.9	1.1	0.0	0.0	0.0	2.6	2.9	2.9	2.9	2.9
DAY/HR	1/ 1	1/ 8	1/ 8	1/ 8	9/ 9	0/ 0	0/ 0	0/ 0	23/ 8	15/ 8	4/ 8	2/ 8	
SPACE COOL	0.	0.	0.	178.	522.	1419.	2612.	2221.	928.	270.	41.	0.	8189.
MAX KW	0.0	0.0	0.0	6.7	12.5	16.2	18.7	16.5	13.0	5.8	5.9	0.0	18.7
DAY/HR	0/ 0	0/ 0	0/ 0	29/18	21/14	20/16	8/16	19/16	11/15	4/17	1/16	0/ 0	
HEAT REJECT	0.	0.	0.	55.	135.	317.	428.	416.	213.	85.	13.	0.	1661.
MAX KW	0.0	0.0	0.0	1.8	1.8	1.8	1.8	1.8	1.8	1.7	1.8	0.0	1.8
DAY/HR	0/ 0	0/ 0	0/ 0	26/15	16/17	3/12	1/ 9	1/11	4/18	4/17	1/16	0/ 0	
PUMPS & MISC	151.	126.	119.	99.	101.	144.	171.	169.	117.	113.	100.	136.	1547.
MAX KW	0.5	0.5	0.5	0.7	0.7	0.7	0.7	0.7	0.7	1.2	0.7	0.5	1.2
DAY/HR	1/ 1	1/ 8	1/ 8	1/13	1/10	3/ 9	1/ 8	1/ 8	3/12	16/13	1/ 9	1/ 9	
VENT FANS	256.	215.	195.	182.	263.	469.	958.	724.	346.	173.	171.	231.	4181.
MAX KW	4.0	3.9	3.3	2.2	3.0	4.2	7.3	6.0	4.1	1.8	3.0	3.5	7.3
DAY/HR	7/ 8	4/ 8	25/ 8	1/ 8	21/16	20/16	15/ 9	19/16	9/16	21/ 8	18/ 8	26/ 8	
TOTAL KWH	3918.	3334.	3377.	3417.	3857.	4934.	6990.	6351.	4196.	3519.	3099.	3651.	50644.

FUEL END-USES IN MBTU

	JAN	FEB	MAR	APR	MAY	JUN	JUL	AUG	SEP	OCT	NOV	DEC	TOTAL
SPACE HEAT	51.6	40.2	25.0	6.4	0.9	0.0	0.0	0.0	0.4	3.9	21.3	41.5	191.1
MAX MBTU	0.558	0.535	0.490	0.344	0.071	0.000	0.000	0.000	0.167	0.358	0.433	0.507	0.558
DAY/HR	7/ 8	4/ 8	25/ 8	8/ 8	9/ 9	0/ 0	0/ 0	0/ 0	23/ 8	21/ 8	25/ 8	26/ 8	
TOTAL MBTU	51.6	40.2	25.0	6.4	0.9	0.0	0.0	0.0	0.4	3.9	21.3	41.5	191.1

ENERGY-RESOURCE: ELECTRICITY
UNITS: KWH

	JAN	FEB	MAR	APR	MAY	JUN	JUL	AUG	SEP	OCT	NOV	DEC
PEAK DEMAND:	16.2	16.1	15.8	22.2	28.4	33.8	39.2	36.0	30.7	19.8	21.1	15.8
DAY/HR:	7/ 9	4/ 9	25/ 9	29/15	21/14	20/16	8/15	19/16	11/15	31/15	1/15	9/11
BREAKDOWN												
AREA LIGHTS:	6.75	6.75	6.75	7.50	6.75	7.50	7.50	7.50	7.50	7.50	7.50	7.50
(%):	41.76	41.81	42.68	33.83	23.78	22.16	19.14	20.84	24.45	37.84	35.62	47.50
MISC EQUIPMT:	4.00	4.00	4.00	4.00	4.00	3.50	4.00	3.50	4.00	4.00	4.00	4.00
(%):	24.75	24.78	25.29	18.04	14.09	10.34	10.21	9.73	13.04	20.18	19.00	25.34
SPACE HEAT:	2.95	2.95	2.95	0.00	0.00	0.00	0.00	0.00	0.00	0.00	0.00	2.95
(%):	18.24	18.27	18.65	0.00	0.00	0.00	0.00	0.00	0.00	0.00	0.00	18.68
SPACE COOL:	0.00	0.00	0.00	6.34	12.51	16.16	18.33	16.46	13.02	5.16	5.59	0.00
(%):	0.00	0.00	0.00	28.58	44.05	47.73	46.78	45.74	42.46	26.03	26.53	0.00
HEAT REJECT:	0.00	0.00	0.00	1.82	1.82	1:82	1.82	1.82	1.82	1.56	1.74	0.00
(%):	0.00	0.00	0.00	8.23	6.43	5.39	4.66	5.07	5.95	7.89	8.28	0.00
PUMPS & MISC:	0.49	0.49	0.49	0.71	0.71	0.71	0.71	0.71	0.71	0.71	0.71	0.49
(%):	3.05	3.06	3.12	3.21	2.50	2.10	1.81	1.98	2.32	3.59	3.38	3.13
VENT FANS:	1.97	1.95	1.62	1.80	2.60	4.16	6.82	5.99	3.61	0.89	1.52	0.85
(%):	12.19	12.08	10.25	8.11	9.15	12.28	17.41	16.64	11.78	4.47	7.20	5.35

ENERGY-RESOURCE: NATURAL-GAS
UNITS: THERMS

	JAN	FEB	MAR	APR	MAY	JUN	JUL	AUG	SEP	OCT	NOV	DEC
PEAK DEMAND:	5.6	5.3	4.9	3.4	0.7	0.0	0.0	0.0	1.7	3.6	4.3	5.1
DAY/HR:	7/ 8	4/ 8	25/ 8	8/ 8	9/ 9	0/ 0	0/ 0	0/ 0	23/ 8	21/ 8	25/ 8	26/ 8
BREAKDOWN												
AREA LIGHTS:	0.00	0.00	0.00	0.00	0.00	0.00	0.00	0.00	0.00	0.00	0.00	0.00
(%):	0.00	0.00	0.00	0.00	0.00	0.00	0.00	0.00	0.00	0.00	0.00	0.00
MISC EQUIPMT:	0.00	0.00	0.00	0.00	0.00	0.00	0.00	0.00	0.00	0.00	0.00	0.00
(%):	0.00	0.00	0.00	0.00	0.00	0.00	0.00	0.00	0.00	0.00	0.00	0.00
SPACE HEAT:	5.58	5.35	4.90	3.44	0.71	0.00	0.00	0.00	1.67	3.58	4.33	5.07
(%):	100.00	100.00	100.00	100.00	100.00	0.00	0.00	0.00	100.00	100.00	100.00	100.00
SPACE COOL:	0.00	0.00	0.00	0.00	0.00	0.00	0.00	0.00	0.00	0.00	0.00	0.00
(%):	0.00	0.00	0.00	0.00	0.00	0.00	0.00	0.00	0.00	0.00	0.00	0.00
HEAT REJECT:	0.00	0.00	0.00	0.00	0.00	0.00	0.00	0.00	0.00	0.00	0.00	0.00
(%):	0.00	0.00	0.00	0.00	0.00	0.00	0.00	0.00	0.00	0.00	0.00	0.00
PUMPS & MISC:	0.00	0.00	0.00	0.00	0.00	0.00	0.00	0.00	0.00	0.00	0.00	0.00
(%):	0.00	0.00	0.00	0.00	0.00	0.00	0.00	0.00	0.00	0.00	0.00	0.00
VENT FANS:	0.00	0.00	0.00	0.00	0.00	0.00	0.00	0.00	0.00	0.00	0.00	0.00
(%):	0.00	0.00	0.00	0.00	0.00	0.00	0.00	0.00	0.00	0.00	0.00	0.00

TOTAL HOURS AT HOURLY DEMAND AND TIME OF DAY

	HOUR	1AM	2	3	4	5	6	7	8	9	10	11	12	1PM	2	3	4	5	6	7	8	9	10	11	12	TOTAL
	40	0	0	0	0	0	0	0	0	0	0	0	0	0	0	1	1	0	0	0	0	0	0	0	0	2
	37	0	0	0	0	0	0	0	0	2	1	2	2	1	3	6	5	3	3	0	0	0	0	0	0	28
	34	0	0	0	0	0	0	0	0	0	2	5	4	2	6	8	9	9	6	0	0	0	0	0	0	51
	31	0	0	0	0	0	0	0	0	4	4	4	5	7	13	23	24	14	13	0	0	0	0	0	0	111
D	28	0	0	0	0	0	0	0	0	8	11	14	20	15	26	26	27	28	31	0	0	0	0	0	0	206
E	25	0	0	0	0	0	0	0	2	13	23	33	30	30	22	16	14	22	22	0	0	0	0	0	0	227
M K	21	0	0	0	0	0	0	0	2	23	21	11	10	17	12	9	8	11	10	0	0	0	0	0	0	134
A W	18	0	0	0	0	0	0	0	3	19	13	32	17	14	14	14	15	11	9	0	0	0	0	0	0	161
N	15	0	0	0	0	0	0	0	8	146	151	136	138	99	110	128	111	62	65	0	0	0	0	0	0	1154
D	12	0	0	0	0	0	0	0	9	37	26	15	26	67	46	21	38	92	93	0	0	0	0	0	0	470
	9	0	0	0	0	0	0	0	41	0	0	0	0	0	0	0	0	0	0	0	0	0	0	0	0	41
	6	9	9	14	10	13	11	15	104	5	4	5	5	4	3	4	5	4	4	260	5	6	8	8	8	523
	3	356	356	351	355	352	354	350	196	108	109	108	108	109	110	109	108	109	109	105	360	359	357	357	357	5652
PERCENT TOTAL DEMAND		0.4	0.4	0.4	0.4	0.4	0.4	0.5	2.5	8.1	8.4	8.8	8.8	8.3	8.9	9.5	9.3	8.8	8.7	3.1	1.6	0.9	0.4	0.4	0.4	

PEAK ELECTRICAL LOAD BREAKDOWN

SOURCE	KW	PCT
SYSTEMS LOAD	18.322	46.8
CIRCULATION PUMPS	0.711	1.8
HERM-REC-CHLR	20.155	51.4
TOTAL	39.188	

EQUIPMENT	AVG OPER RATIO	MAX LOAD (MBTU)	MON	DAY	HR	SIZE (MBTU)	OPER HRS	SIZE (MBTU)	OPER HRS	SIZE (MBTU)	OPER HRS	SIZE (MBTU)	OPER HRS	SIZE (MBTU)	OPER HRS
HW-BOILER	0.178	0.444	1	7	8	0.457	1504								
HERM-REC-CHLR	0.359	0.219	7	8	16	0.222	1132								

E Q U I P M E N T T O T A L S

HW-BOILER	23.3		
NOMINAL SIZE (MBTU)			0.457
NUMBER INSTALLED			1
FIRST COST (K$)		21.0	21.0
ANNUAL COST (K$)		1.2	1.2
CYCLICAL COST (K$)		1.1	1.1
-----TOTAL----(K$)			23.3
HERM-REC-CHLR	11.7		
NOMINAL SIZE (MBTU)			0.222
NUMBER INSTALLED			1
FIRST COST (K$)		8.3	8.3
ANNUAL COST (K$)		2.5	2.5
CYCLICAL COST (K$)		0.9	0.9
-----TOTAL----(K$)			11.7
EQUIPMENT TOTAL	35.0		

ENERGY TYPE:	ELECTRICITY	NATURAL-GAS
UNITS: MBTU		
CATEGORY OF USE		
AREA LIGHTS	74.7	0.0
MISC EQUIPMT	35.9	0.0
SPACE HEAT	9.0	191.1
SPACE COOL	27.9	0.0
HEAT REJECT	5.7	0.0
PUMPS & MISC	5.3	0.0
VENT FANS	14.3	0.0
TOTAL	172.8	191.1

TOTAL SITE ENERGY	363.93 MBTU	72.8 KBTU/SQFT-YR GROSS-AREA	72.8 KBTU/SQFT-YR NET-AREA
TOTAL SOURCE ENERGY	709.67 MBTU	141.9 KBTU/SQFT-YR GROSS-AREA	141.9 KBTU/SQFT-YR NET-AREA

PERCENT OF HOURS ANY SYSTEM ZONE OUTSIDE OF THROTTLING RANGE = 1.7
PERCENT OF HOURS ANY PLANT LOAD NOT SATISFIED = 0.0

NOTE: ENERGY IS APPORTIONED HOURLY TO ALL END-USE CATEGORIES.

ENERGY TYPE: SITE UNITS:	ELECTRICITY KWH	NATURAL-GAS THERMS
CATEGORY OF USE		
AREA LIGHTS	21902.	0.
MISC EQUIPMT	10527.	0.
SPACE HEAT	2636.	1911.
SPACE COOL	8189.	0.
HEAT REJECT	1661.	0.
PUMPS & MISC	1547.	0.
VENT FANS	4181.	0.
TOTAL	50644.	1911.

TOTAL ELECTRICITY	50644. KWH	10.129 KWH	/SQFT-YR GROSS-AREA	10.129 KWH	/SQFT-YR NET-AREA
TOTAL NATURAL-GAS	1911. THERMS	0.382 THERMS	/SQFT-YR GROSS-AREA	0.382 THERMS	/SQFT-YR NET-AREA

PERCENT OF HOURS ANY SYSTEM ZONE OUTSIDE OF THROTTLING RANGE = 1.7
PERCENT OF HOURS ANY PLANT LOAD NOT SATISFIED = 0.0

NOTE: ENERGY IS APPORTIONED HOURLY TO ALL END-USE CATEGORIES.

MMDDHH	HERM-REC -CHLR LOAD BTU/HR ----(1)	HERM-REC -CHLR OPER PT LD RATIO FRAC.OR MULT. ----(10)	HERM-REC -CHLR ADJUSTED EIR BTU/BTU ----(16)
8 5 1	0.	0.000	0.000
8 5 2	0.	0.000	0.000
8 5 3	0.	0.000	0.000
8 5 4	0.	0.000	0.000
8 5 5	0.	0.000	0.000
8 5 6	0.	0.000	0.000
8 5 7	0.	0.000	0.000
8 5 8	15929.	0.250	0.081
8 5 9	56639.	0.250	0.083
8 510	74613.	0.318	0.102
8 511	91168.	0.390	0.121
8 512	96404.	0.416	0.130
8 513	113157.	0.488	0.147
8 514	125208.	0.540	0.161
8 515	128849.	0.552	0.161
8 516	124249.	0.531	0.155
8 517	118941.	0.511	0.153
8 518	0.	0.000	0.000
8 519	0.	0.000	0.000
8 520	0.	0.000	0.000
8 521	0.	0.000	0.000
8 522	0.	0.000	0.000
8 523	0.	0.000	0.000
8 524	0.	0.000	0.000
DAILY SUMMARY (AUG 5)			
MN	0.	0.000	0.000
MX	128849.	0.552	0.161
SM	945157.	4.246	1.293
AV	39382.	0.177	0.054
MONTHLY SUMMARY (AUG)			
MN	0.	0.000	0.000
MX	128849.	0.552	0.161
SM	945157.	4.246	1.293
AV	39382.	0.177	0.054
YEARLY SUMMARY			
MN	0.	0.000	0.000
MX	128849.	0.552	0.161
SM	945157.	4.246	1.293
AV	39382.	0.177	0.054

LIFE-CYCLE COSTING PARAMETERS

DISCOUNT RATE (PERCENT)	LABOR INFLATION RATE (PERCENT)	MATERIALS INFLATION RATE (PERCENT)	PROJECT LIFE (YRS)
5.0	0.0	0.0	25.0

BUILDING COMPONENT COST INPUT DATA (CURRENT DOLLARS)

COST NAME	NUMBER OF UNITS	UNIT NAME	LIFE (YRS)	UNIT FIRST COST ($)	UNIT INSTALL -ATION COST ($)	UNIT ANNUAL MAINT COST ($)	UNIT MINOR OVERHAUL COST ($)	MINOR OVERHAUL INTERVAL (YRS)	UNIT MAJOR OVERHAUL COST ($)	MAJOR OVERHAUL INTERVAL (YRS)

NO BUILDING COMPONENT COSTS SPECIFIED

REPORT- ES-A ANNUAL ENERGY AND OPERATIONS COSTS AND SAVINGS

	ENERGY ($)			OPERATIONS ($)					TOTAL SAVINGS-
					OPRNS COST -- THIS RUN				
YEAR	ENERGY COST BASELINE	ENERGY COST THIS RUN	ENERGY COST SAVINGS	OPRNS COST BASELINE	PLANT	BUILDING	TOTAL	OPRNS COST SAVINGS	ENERGY PLUS OPRNS
1	0.	4369.	-4369.	0.	249.	0.	249.	-249.	-4619.
2	0.	4431.	-4431.	0.	238.	0.	238.	-238.	-4668.
3	0.	4493.	-4493.	0.	314.	0.	314.	-314.	-4807.
4	0.	4557.	-4557.	0.	216.	0.	216.	-216.	-4772.
5	0.	4622.	-4622.	0.	205.	0.	205.	-205.	-4827.
6	0.	4688.	-4688.	0.	272.	0.	272.	-272.	-4960.
7	0.	4756.	-4756.	0.	186.	0.	186.	-186.	-4942.
8	0.	4824.	-4824.	0.	412.	0.	412.	-412.	-5236.
9	0.	4894.	-4894.	0.	236.	0.	236.	-236.	-5130.
10	0.	4966.	-4966.	0.	161.	0.	161.	-161.	-5127.
11	0.	5038.	-5038.	0.	212.	0.	212.	-212.	-5250.
12	0.	5113.	-5113.	0.	146.	0.	146.	-146.	-5258.
13	0.	5188.	-5188.	0.	139.	0.	139.	-139.	-5327.
14	0.	5265.	-5265.	0.	828.	0.	828.	-828.	-6093.
15	0.	5344.	-5344.	0.	126.	0.	126.	-126.	-5470.
16	0.	5424.	-5424.	0.	279.	0.	279.	-279.	-5702.
17	0.	5505.	-5505.	0.	159.	0.	159.	-159.	-5664.
18	0.	5588.	-5588.	0.	109.	0.	109.	-109.	-5697.
19	0.	5673.	-5673.	0.	104.	0.	104.	-104.	-5776.
20	0.	5759.	-5759.	0.	531.	0.	531.	-531.	-6290.
21	0.	5847.	-5847.	0.	94.	0.	94.	-94.	-5941.
22	0.	5936.	-5936.	0.	124.	0.	124.	-124.	-6060.
23	0.	6027.	-6027.	0.	85.	0.	85.	-85.	-6113.
24	0.	6120.	-6120.	0.	189.	0.	189.	-189.	-6309.
25	0.	6215.	-6215.	0.	108.	0.	108.	-108.	-6323.
TOTALS($)	0.	130641.	-130641.	0.	5721.	0.	5721.	-5721.	-136362.

LIFE-CYCLE BUILDING AND PLANT NON-ENERGY COSTS ($)

COST NAME	FIRST COST (INCLUDING INSTALLATION)	REPLACEMENTS	OPERATIONS	TOTAL	INVESTMENT (FIRST COST PLUS REPLACEMENTS)
NO BUILDING COMPONENT COSTS SPECIFIED					
PLANT EQUIPMENT	29298.	0.	5721.	35019.	29298.
TOTALS	29298.	0.	5721.	35019.	29298.

ENERGY SAVINGS

	ANNUAL ENERGY USE BASELINE (MBTU)	(MWH)	ANNUAL ENERGY USE THIS RUN (MBTU)	(MWH)	ANNUAL ENERGY SAVINGS (MBTU)	(MWH)	ANNUAL ENERGY SAVINGS (PCT)
AT SITE	0.00	0.00	363.93	106.63	-363.93	-106.63	0.0
AT SOURCE	0.00	0.00	709.67	207.93	-709.67	-207.93	0.0

INVESTMENT STATISTICS

PROJECT LIFE 25.0 YEARS

INVESTMENT THIS RUN ($)	BASELINE REPLACEMENT COSTS ($)	INCREMENTAL INVESTMENT ($)	COST SAVINGS ($)	RATIO OF SAVINGS TO INCREMENTAL INVESTMENT (SIR)	DISCOUNTED PAYBACK PERIOD (YEARS)	RATIO OF LIFE CYCLE ENERGY SAVINGS (AT SITE) TO INCREMENTAL INVESTMENT (MBTU/$)	(MWH/$)	RATIO OF LIFE-CYCLE ENERGY SAVINGS (AT SOURCE) TO INCREMENTAL INVESTMENT (MBTU/$)	(MWH/$)
29298.	0.	29298.	-136362.	-4.65	999.00	-0.31	-0.09	-0.61	-0.18

OVERALL LIFE-CYCLE COSTS ($)

	FIRST COST	OPRNS COST	REPLACEMENTS	ENERGY COST	T O T A L
BASELINE	0.	0.	0.	0.	0.
THIS RUN	29298.	5721.	0.	130641.	165660.
SAVINGS($)	-29298.	-5721.	0.	-130641.	-165660.
(PCT)	0.0	0.0	0.0	0.0	0.0

SIMPLE STRUCTURE RUN 3; CHICAGO
DESIGN-DAY SIZING OF VAV SYSTEM
REPORT- ES-D ENERGY COST SUMMARY

DIVIDE INTO ZONES; ADD PLENUM
SHOW ALL REPORTS

DOE-2.1E-001 Thu Nov 4 16:29:40 1993EDL RUN 1

UTILITY-RATE	RESOURCE	METERS	METERED ENERGY UNITS/YR	TOTAL CHARGE ($)	VIRTUAL RATE ($/UNIT)	RATE USED ALL YEAR?
ELEC-TARIFF	ELECTRICITY	1 2 3 4 5	50644. KWH	3223.	0.0636	YES
GAS-RATE	NATURAL-GAS	1 2 3 4 5	1911. THERMS	1146.	0.6000	YES
				==========		
				4369.		

ENERGY COST/GROSS BLDG AREA: 0.87
ENERGY COST/NET BLDG AREA: 0.87

SIMPLE STRUCTURE RUN 3. CHICAGO DIVIDE INTO ZONES; ADD PLENUM DOE-2.1E-001 Thu Nov 4 16:29:40 1993EDL RUN 1
DESIGN-DAY SIZING OF VAV SYSTEM SHOW ALL REPORTS
REPORT- ES-E SUMMARY OF UTILITY-RATE: ELEC-TARIFF

UTILITY-RATE: ELEC-TARIFF

RESOURCE: ELECTRICITY
METERS: 1 2 3 4 5
POWER-FACTOR: 0.80

DEMAND-WINDOW: HOUR
BILLING-DAY: 31
EXCESS-KVAR-FRAC: 0.30

3413. BTU/KWH
RATE-LIMITATION: 0.0000
EXCESS-KVAR-CHG: 0.0000

RATE-QUALIFICATIONS

MIN-ENERGY: 0.0
MAX-ENERGY: 0.0
MIN-DEMAND: 0.0
MAX-DEMAND: 0.0
QUALIFY-RATE: ALL-MONTHS
USE-MIN-QUAL: NO

BLOCK-CHARGES

DEMAND-RATCHETS

MIN-MON-RATCHETS

MONTH	METERED ENERGY KWH	BILLING ENERGY KWH	METERED DEMAND KW	BILLING DEMAND KW	ENERGY CHARGE ($)	DEMAND CHARGE ($)	ENERGY CST ADJ ($)	TAXES ($)	SURCHRG ($)	FIXED CHARGE ($)	MINIMUM CHARGE ($)	VIRTUAL RATE ($/UNIT)	TOTAL CHARGE ($)
JAN	3918	3918	16.2	16.2	245	0	0	0	0	0	0	0.0624	245
FEB	3334	3334	16.1	16.1	208	0	0	0	0	0	0	0.0625	208
MAR	3378	3378	15.8	15.8	212	0	0	0	0	0	0	0.0629	212
APR	3417	3417	22.2	22.2	218	0	0	0	0	0	0	0.0637	218
MAY	3857	3857	28.4	28.4	247	0	0	0	0	0	0	0.0641	247
JUN	4934	4934	33.8	33.8	318	0	0	0	0	0	0	0.0644	318
JUL	6990	6990	39.2	39.2	448	0	0	0	0	0	0	0.0641	448
AUG	6351	6351	36.0	36.0	408	0	0	0	0	0	0	0.0642	408
SEP	4196	4196	30.7	30.7	270	0	0	0	0	0	0	0.0643	270
OCT	3519	3519	19.8	19.8	225	0	0	0	0	0	0	0.0639	225
NOV	3099	3099	21.1	21.1	196	0	0	0	0	0	0	0.0631	196
DEC	3651	3651	15.8	15.8	229	0	0	0	0	0	0	0.0626	229
TOTAL	50644	50644	39.2		3223	0	0	0	0	0		0.0636	3223

SIMPLE STRUCTURE RUN 3, CHICAGO
DESIGN-DAY SIZING OF VAV SYSTEM
REPORT- ES-E SUMMARY OF UTILITY-RATE:

DIVIDE INTO ZONES; ADD PLENUM
SHOW ALL REPORTS
GAS-RATE

DOE-2.1E-001 Thu Nov 4 16:29:40 1993EDL RUN 1

UTILITY-RATE: GAS-RATE

RESOURCE: NATURAL-GAS
METERS: 1 2 3 4 5

DEMAND-WINDOW: HOUR
BILLING-DAY: 31

100000. BTU/THERMS
RATE-LIMITATION: 0.0000

RATE-QUALIFICATIONS

MIN-ENERGY: 0.0
MAX-ENERGY: 0.0
MIN-DEMAND: 0.0
MAX-DEMAND: 0.0
QUALIFY-RATE: ALL-MONTHS
USE-MIN-QUAL: NO

BLOCK-CHARGES

DEMAND-RATCHETS

MIN-MON-RATCHETS

MONTH	METERED ENERGY THERMS	BILLING ENERGY THERMS	METERED DEMAND THERMS	BILLING DEMAND THERMS	ENERGY CHARGE ($)	DEMAND CHARGE ($)	ENERGY CST ADJ ($)	TAXES ($)	SURCHRG ($)	FIXED CHARGE ($)	MINIMUM CHARGE ($)	VIRTUAL RATE ($/UNIT)	TOTAL CHARGE ($)
JAN	516	516	5.6	5.6	309	0	0	0	0	0	0	0.6000	309
FEB	402	402	5.3	5.3	241	0	0	0	0	0	0	0.6000	241
MAR	250	250	4.9	4.9	150	0	0	0	0	0	0	0.6000	150
APR	64	64	3.4	3.4	38	0	0	0	0	0	0	0.6000	38
MAY	9	9	0.7	0.7	5	0	0	0	0	0	0	0.6000	5
JUN	0	0	0.0	0.0	0	0	0	0	0	0	0	0.0000	0
JUL	0	0	0.0	0.0	0	0	0	0	0	0	0	0.0000	0
AUG	0	0	0.0	0.0	0	0	0	0	0	0	0	0.0000	0
SEP	4	4	1.7	1.7	3	0	0	0	0	0	0	0.6000	3
OCT	39	39	3.6	3.6	23	0	0	0	0	0	0	0.6000	23
NOV	213	213	4.3	4.3	128	0	0	0	0	0	0	0.6000	128
DEC	415	415	5.1	5.1	249	0	0	0	0	0	0	0.6000	249
TOTAL	1911	1911	5.6		1146	0	0	0	0	0		0.6000	1146

L D L P R O C E S S O R I N P U T D A T A

Thu Nov 4 16:29:40 1993LDL RUN 4

```
* 684 *
* 685 * TITLE          LINE-1 *SIMPLE STRUCTURE RUN 3A, CHICAGO *
* 686 *               LINE-2 *INCREASED ROOF INSULATION * ..
* 687 *
* 688 *               RUN-PERIOD         JAN 1 1974 THRU DEC 31 1974    ..
* 689 *               ABORT              ERRORS  ..
* 690 *               DIAGNOSTIC         WARNINGS  ..
* 691 *               LOADS-REPORT       SUMMARY = (LS-C,LS-D)
* 692 *                                  VERIFICATION = (LV-B,LV-D)   ..
* 693 *               BUILDING-LOCATION  LATITUDE=42.0  LONGITUDE=88.0
* 694 *                                  ALTITUDE=610
* 695 *                                  TIME-ZONE=6  AZIMUTH=30.0   ..
* 696 *
* 697 * $                 BUILDING DESCRIPTION
* 698 *
* 699 * $ STRUCTURE   THE BUILDING IS IDENTICAL TO THAT IN RUN 3 ABOVE EXCEPT
* 700 * $             THAT THE ROOF HAS AN ADDITIONAL INCH OF INSULATION.
* 701 *
* 702 * $ SYSTEMS AND PLANT SIZING IS TAKEN FROM RESULTS OF RUN 3.
* 703 *
* 704 * $ ECONOMICS SPECIFICATIONS ARE THE SAME AS RUN3, BUT INCLUDE THE COSTS
* 705 * $             OF THE IMPROVEMENTS ADDED FOR THE RUN AND THE RESULTS OF RUN 3
* 706 * $             AS A BASELINE.
* 707 * $
* 708 * $  BASELINE       BASELINE ECONOMICS DATA ARE TAKEN FROM
* 709 * $                 SIMPLE STRUCTURE RUN 3 REPORTS ES-A AND ES-C.
* 710 * $
* 711 * $  IMPROVEMENT    5000 SQFT OF INSULATION AT 1.10 DOLLARS/SQFT
* 712 *
* 713 *                       $ CONSTRUCTION AND GLASS-TYPES
* 714 *
* 715 * ROO-1  =LAYERS =MAT=(RG01,BR01,IN46,WD01)  I-F-R .76  ..
* 716 * WA-1-2 =LAYERS =MAT=(WD01,PW03,IN02,GP01)  ..
* 717 * WALL-1         =CONSTRUCTION       LAYERS=WA-1-2  ..
* 718 * ROOF-1         =CONSTRUCTION       LAYERS=ROO-1  ..
* 719 * CLNG-1         =CONSTRUCTION       U = 0.27  ..
* 720 * SB-U           =CONSTRUCTION       U = 1.5   ..
* 721 * FLOOR-1        =CONSTRUCTION       U = 0.05  ..
* 722 *
* 723 * W-1            =GLASS-TYPE         GLASS-TYPE-CODE = 3  PANES = 2  ..
* 724 * DOORS          =GLASS-TYPE         GLASS-TYPE-CODE = 5   ..
* 725 *
* 726 *                       $ OCCUPANCY SCHEDULE
* 727 *
* 728 * OC-1           =DAY-SCHEDULE       (1,8) (0.0)
* 729 *                                    (9,11) (1.0)
* 730 *                                    (12,14) (0.8,0.4,0.8)
* 731 *                                    (15,18) (1.0)
* 732 *                                    (19,21) (0.5,0.1,0.1)
* 733 *                                    (22,24) (0.0)  ..
* 734 *
* 735 * OC-2           =DAY-SCHEDULE       (1,24) (0.0)  ..
* 736 *
* 737 * OC-WEEK        =WEEK-SCHEDULE      (WD) OC-1 (WEH) OC-2  ..
* 738 *
```

```
* 739 * OCCUPY-1        =SCHEDULE           THRU DEC 31 OC-WEEK  ..
* 740 *
* 741 *                        $ LIGHTING SCHEDULE
* 742 *
* 743 * LT-1            =DAY-SCHEDULE       (1,8) (0.05)
* 744 *                                     (9,14) (0.9,0.95,1.0,0.95,0.8,0.9)
* 745 *                                     (15,18) (1.0)
* 746 *                                     (19,21) (0.6,0.2,0.2)
* 747 *                                     (22,24) (0.05)  ..
* 748 *
* 749 * LT-2            =DAY-SCHEDULE       (1,24) (0.05)  ..
* 750 *
* 751 * LT-WEEK         =WEEK-SCHEDULE      (MON,FRI) LT-1   (WEH) LT-2  ..
* 752 *
* 753 * LIGHTS-1        =SCHEDULE           THRU DEC 31 LT-WEEK  ..
* 754 *
* 755 *                  $ OFFICE EQUIPMENT SCHEDULE
* 756 *
* 757 * EQ-1            =DAY-SCHEDULE       (1,8) (0.02)
* 758 *                                     (9,14) (0.4,0.9,0.9,0.9,0.9,0.9)
* 759 *                                     (15,20) (0.8,0.7,0.5,0.5,0.3,0.3)
* 760 *                                     (21,24) (0.02)  ..
* 761 *
* 762 * EQ-2            =DAY-SCHEDULE       (1,24) (0.2)  ..
* 763 *
* 764 * EQ-WEEK         =WEEK-SCHEDULE      (MON,FRI) EQ-1   (WEH) EQ-2  ..
* 765 *
* 766 * EQUIP-1         =SCHEDULE           THRU DEC 31 EQ-WEEK  ..
* 767 *
* 768 *                  $ INFILTRATION SCHEDULE
* 769 *
* 770 * INFIL-SCH       =SCHEDULE           THRU MAR 31 (ALL) (1,24) (1)
* 771 *                                     THRU OCT 31 (ALL) (1,24) (0)
* 772 *                                     THRU DEC 31 (ALL) (1,24) (1)  ..
* 773 *
* 774 *
* 775 *                        $ SET DEFAULT VALUES
* 776 *
* 777 *                 SET-DEFAULT FOR SPACE  FLOOR-WEIGHT=70  ..
* 778 *                 SET-DEFAULT FOR EXTERIOR-WALL  CONSTRUCTION=WALL-1  ..
* 779 *                 SET-DEFAULT FOR WINDOW  HEIGHT=4.0  GLASS-TYPE=W-1  Y=3  ..
* 780 *
* 781 *                        $ GENERAL SPACE DEFINITION
* 782 *
* 783 * OFFICE          =SPACE-CONDITIONS   PEOPLE-SCHEDULE      =OCCUPY-1
* 784 *                                     NUMBER-OF-PEOPLE     =50
* 785 *                                     PEOPLE-HEAT-GAIN     =400
* 786 *                                     LIGHTING-SCHEDULE    =LIGHTS-1
* 787 *                                     LIGHTING-TYPE        =REC-FLUOR-RV
* 788 *                                     LIGHT-TO-SPACE       =.80
* 789 *                                     LIGHTING-W/SQFT      =1.5
* 790 *                                     EQUIP-SCHEDULE       =EQUIP-1
* 791 *                                     EQUIPMENT-W/SQFT     =1
* 792 *                                     INF-METHOD           =AIR-CHANGE
* 793 *                                     AIR-CHANGES/HR       =0.25
* 794 *                                     INF-SCHEDULE         =INFIL-SCH  ..
* 795 *
* 796 *                        $ SPECIFIC SPACE DETAILS
* 797 *
* 798 * PLENUM-1        =SPACE              ZONE-TYPE=PLENUM  AREA=5000
* 799 *                                     VOLUME=10000  Z=8  FLOOR-WEIGHT=5  ..
* 800 *
* 801 *     WALL-1PF    =EXTERIOR-WALL      HEIGHT = 2  WIDTH = 100
```

```
* 802 *                                  AZIMUTH = 180   ..
* 803 *
* 804 *     WALL-1PR   =EXTERIOR-WALL    HEIGHT = 2  WIDTH = 50
* 805 *                                  AZIMUTH = 90  X = 100  ..
* 806 *
* 807 *     WALL-1PB   =EXTERIOR-WALL    HEIGHT = 2  WIDTH = 100
* 808 *                                  X = 100  Y = 50  AZIMUTH = 0   ..
* 809 *
* 810 *     WALL-1PL   =EXTERIOR-WALL    HEIGHT = 2  WIDTH = 50
* 811 *                                  AZIMUTH = 270  Y = 50  ..
* 812 *
* 813 *     TOP-1      =ROOF             HEIGHT=50  WIDTH=100
* 814 *                                  X=0   Y=0   Z=2   AZIMUTH = 180
* 815 *                                  TILT=0  GND-REFLECTANCE=0
* 816 *                                  CONSTRUCTION = ROOF-1   ..
* 817 *
* 818 * SPACE1-1      =SPACE            SPACE-CONDITIONS = OFFICE
* 819 *                                  AREA = 1056  VOLUME = 8448
* 820 *                                  NUMBER-OF-PEOPLE = 11   ..
* 821 *     FRONT-1    =EXTERIOR-WALL    HEIGHT = 8            WIDTH = 100
* 822 *                                  X=0   Y=0   Z=0  AZIMUTH = 180   ..
* 823 *       WF-1     =WINDOW           WIDTH = 45  X = 10  ..
* 824 *       DF-1     =WINDOW           WIDTH = 8  HEIGHT = 8
* 825 *                                  X = 70  Y = 0  GLASS-TYPE=DOORS
* 826 *                                  OVERHANG-A 1  OVERHANG-B .5
* 827 *                                  OVERHANG-W 10 OVERHANG-D 4  ..
* 828 *
* 829 *     C1-1       =INTERIOR-WALL    AREA = 1056  NEXT-TO  PLENUM-1
* 830 *                                  CONSTRUCTION = CLNG-1   ..
* 831 *
* 832 *     F1-1       =UNDERGROUND-FLOOR AREA = 1056  CONSTRUCTION = FLOOR-1 ..
* 833 *
* 834 *     SB12       =INTERIOR-WALL    AREA=135.76  NEXT-TO SPACE2-1
* 835 *                                  CONSTRUCTION = SB-U   ..
* 836 *
* 837 *     SB14       =INTERIOR-WALL    LIKE SB12  NEXT-TO SPACE4-1   ..
* 838 *     SB15       =INTERIOR-WALL    AREA 608              NEXT-TO  SPACE5-1
* 839 *                                  CONSTRUCTION = SB-U   ..
* 840 *
* 841 * SPACE2-1      =SPACE            SPACE-CONDITIONS = OFFICE
* 842 *                                  AREA = 456  VOLUME = 3648
* 843 *                                  NUMBER-OF-PEOPLE = 5   ..
* 844 *
* 845 *     RIGHT-1    =EXTERIOR-WALL    HEIGHT = 8  WIDTH = 50
* 846 *                                  X=100  Y=0   Z=0  AZIMUTH = 90  ..
* 847 *
* 848 *       WR-1     =WINDOW           WIDTH = 25  X = 12.5  ..
* 849 *
* 850 *     C2-1       =INTERIOR-WALL    AREA = 456  NEXT-TO PLENUM-1
* 851 *                                  CONSTRUCTION = CLNG-1   ..
* 852 *
* 853 *     F2-1       =UNDERGROUND-FLOOR AREA = 456  CONSTRUCTION = CLNG-1 ..
* 854 *
* 855 *     SB23       =INTERIOR-WALL    AREA = 135.76  NEXT-TO SPACE3-1
* 856 *                                  CONSTRUCTION = SB-U   ..
* 857 *
* 858 *     SB25       =INTERIOR-WALL    AREA = 208  NEXT-TO SPACE5-1
* 859 *                                  CONSTRUCTION = SB-U   ..
* 860 *
* 861 * SPACE3-1      =SPACE            SPACE-CONDITIONS = OFFICE
* 862 *                                  AREA  = 1056  VOLUME = 8448
* 863 *                                  NUMBER-OF-PEOPLE = 11   ..
* 864 *
```

```
* 865 *     BACK-1      =EXTERIOR-WALL      HEIGHT = 8  WIDTH = 100
* 866 *                                     X=100  Y=50  Z=0  AZIMUTH = 0   ..
* 867 *
* 868 *       WB-1      =WINDOW             WIDTH = 45  X = 10  ..
* 869 *       DB-1      =WINDOW             WIDTH = 7  HEIGHT = 7
* 870 *                                     X = 70  Y = 0  GLASS-TYPE=DOORS   ..
* 871 *
* 872 *     C3-1        =INTERIOR-WALL      AREA = 1056  NEXT-TO PLENUM-1
* 873 *                                     CONSTRUCTION = CLNG-1   ..
* 874 *
* 875 *     F3-1        =UNDERGROUND-FLOOR  AREA = 1056
* 876 *                                     CONSTRUCTION = FLOOR-1   ..
* 877 *
* 878 *     SB34        =INTERIOR-WALL      AREA = 135.8  NEXT-TO SPACE4-1
* 879 *                                     CONSTRUCTION = SB-U   ..
* 880 *
* 881 *     SB35        =INTERIOR-WALL      AREA = 608  NEXT-TO SPACE5-1
* 882 *                                     CONSTRUCTION = SB-U   ..
* 883 *
* 884 * SPACE4-1        =SPACE              SPACE-CONDITIONS = OFFICE
* 885 *                                     AREA = 456  VOLUME = 3648
* 886 *                                     NUMBER-OF-PEOPLE = 5   ..
* 887 *
* 888 *     LEFT-1      =EXTERIOR-WALL      HEIGHT = 8  WIDTH = 50
* 889 *                                     X=0   Y=50  Z=0   AZIMUTH = 270  ..
* 890 *
* 891 *       WL-1      =WINDOW             WIDTH = 25  X = 12.5   ..
* 892 *
* 893 *     C4-1        =INTERIOR-WALL      AREA = 456  NEXT-TO PLENUM-1
* 894 *                                     CONSTRUCTION = CLNG-1   ..
* 895 *
* 896 *     F4-1        =UNDERGROUND-FLOOR  AREA = 456
* 897 *                                     CONSTRUCTION = FLOOR-1   ..
* 898 *
* 899 *     SB45        =INTERIOR-WALL      AREA = 208  NEXT-TO SPACE5-1
* 900 *                                     CONSTRUCTION = SB-U   ..
* 901 *
* 902 * SPACE5-1        =SPACE              SPACE-CONDITIONS = OFFICE
* 903 *                                     AREA = 1976  VOLUME = 15808
* 904 *                                     NUMBER-OF-PEOPLE = 20   ..
* 905 *
* 906 *     C5-1        =INTERIOR-WALL      AREA = 1976  NEXT-TO PLENUM-1
* 907 *                                     CONSTRUCTION = CLNG-1   ..
* 908 *
* 909 *     F5-1        =UNDERGROUND-FLOOR  AREA = 1976  CONSTRUCTION = FLOOR-1 ..
* 910 *
* 911 * END  ..
* 912 * COMPUTE  LOADS   ..
* 913 * INPUT SYSTEMS   ..
```

```
* 914 *
* 915 *            SYSTEMS-REPORT  SUMMARY=(SS-A,SS-J)  ..
* 916 *
* 917 *            $ SYSTEMS SCHEDULES
* 918 *
* 919 * FAN-1        =DAY-SCHEDULE       (1,6)(0)(7,8)(-999)(9,18)(1)(19,24)(0)  ..
* 920 * FAN-2        =DAY-SCHEDULE       (1,24) (0)   ..
* 921 * FAN-SCHED    =SCHEDULE           THRU DEC 31 (WD) FAN-1 (WEH) FAN-2  ..
* 922 *
* 923 * HEAT-1      =DAY-SCHEDULE    (1,8) (55)   (9,18) (70)  (19,24) (55)  ..
* 924 * HEAT-2      =DAY-SCHEDULE    (1,24) (55)   ..
* 925 * HEAT-WEEK   =WEEK-SCHEDULE   (MON,FRI)  HEAT-1   (WEH)  HEAT-2   ..
* 926 * HEAT-SCHED  =SCHEDULE        THRU DEC 31   HEAT-WEEK   ..
* 927 * COOLOFF     =SCHEDULE        THRU DEC 31 (ALL) (1,24) (60)  ..
* 928 * HEATOFF     =SCHEDULE        THRU DEC 31 (ALL) (1,24) (60)  ..
* 929 *
* 930 * COOL-1      =DAY-SCHEDULE    (1,8) (99)  (9,18) (78)  (19,24) (99)  ..
* 931 * COOL-2      =DAY-SCHEDULE    (1,24) (99)   ..
* 932 * COOL-WEEK   =WEEK-SCHEDULE   (MON,FRI)  COOL-1   (WEH)  COOL-2   ..
* 933 * COOL-SCHED  =SCHEDULE        THRU DEC 31   COOL-WEEK   ..
* 934 *
* 935 * R1          =DAY-RESET-SCH   SUPPLY-HI=60   SUPPLY-LO=52
* 936 *                              OUTSIDE-LO=30  OUTSIDE-HI=75  ..
* 937 * SAT-RESET   =RESET-SCHEDULE  THRU DEC 31 (ALL) R1  ..
* 938 *
* 939 *
* 940 *                    $ SYSTEM DESCRIPTION
* 941 *
* 942 * ZAIR         =ZONE-AIR      OA-CFM/PER=20  ..
* 943 *
* 944 * CONTROL      =ZONE-CONTROL  DESIGN-HEAT-T=70  DESIGN-COOL-T=76
* 945 *                            HEAT-TEMP-SCH= HEAT-SCHED
* 946 *                            COOL-TEMP-SCH= COOL-SCHED
* 947 *                            THERMOSTAT-TYPE=REVERSE-ACTION  ..
* 948 *
* 949 *                      $ FOLLOWING AIR FLOWS ARE FROM RUN 3 SV-A REPORT,
* 950 *                      $ DIVIDED BY ALTITUDE MULTIPLIER
* 951 *
* 952 * SPACE1-1     =ZONE          ZONE-AIR=ZAIR  SIZING-OPTION=ADJUST-LOADS
* 953 *                            ZONE-CONTROL=CONTROL  ASSIGNED-CFM=2133 ..
* 954 *
* 955 * SPACE2-1     =ZONE          LIKE SPACE1-1   ASSIGNED-CFM=957        ..
* 956 * SPACE3-1     =ZONE          LIKE SPACE1-1   ASSIGNED-CFM=1509       ..
* 957 * SPACE4-1     =ZONE          LIKE SPACE1-1   ASSIGNED-CFM=953        ..
* 958 * SPACE5-1     =ZONE          LIKE SPACE1-1   ASSIGNED-CFM=1814       ..
* 959 *
* 960 * PLENUM-1     =ZONE          ZONE-TYPE=PLENUM  SIZING-OPTION=ADJUST-LOADS
* 961 *                            DESIGN-HEAT-T=50  DESIGN-COOL-T=95  ..
* 962 *
* 963 * S-CONT       =SYSTEM-CONTROL  COOLING-SCHEDULE= COOLOFF
* 964 *                              HEATING-SCHEDULE= HEATOFF
* 965 *                              HEAT-SET-T=65
* 966 *                              COOL-CONTROL=RESET
* 967 *                              COOL-RESET-SCH=SAT-RESET
* 968 *                              MIN-SUPPLY-T=60 ..
```

```
* 969 *
* 970 * S-FAN        =SYSTEM-FANS     FAN-SCHEDULE=FAN-SCHED  FAN-CONTROL=SPEED
* 971 *                              SUPPLY-STATIC=5.5  SUPPLY-EFF=.55
* 972 *                              NIGHT-CYCLE-CTRL=CYCLE-ON-ANY  ..
* 973 *
* 974 * S-TERM       =SYSTEM-TERMINAL REHEAT-DELTA-T=58
* 975 *                              MIN-CFM-RATIO=0.3   ..
* 976 *
* 977 * SYST-1       =SYSTEM          SYSTEM-TYPE=VAVS
* 978 *                              SUPPLY-CFM=7366
* 979 *                              SYSTEM-CONTROL= S-CONT
* 980 *                              SYSTEM-FANS= S-FAN
* 981 *                              SYSTEM-TERMINAL= S-TERM
* 982 *                              ECONO-LIMIT-T=65
* 983 *                              RETURN-AIR-PATH=PLENUM-ZONES
* 984 *                              PLENUM-NAMES=(PLENUM-1)
* 985 *                              ZONE-NAMES=(SPACE5-1,SPACE1-1,SPACE2-1
* 986 *                                        SPACE3-1,SPACE4-1,PLENUM-1)   ..
* 987 *
* 988 * END   ..
* 989 * COMPUTE SYSTEMS   ..
* 990 *
* 991 * INPUT PLANT   ..
```

P D L P R O C E S S O R I N P U T D A T A

Thu Nov 4 16:29:40 1993PDL RUN 2

```
* 992 *
* 993 *              PLANT-REPORT  SUMMARY=(PS-A,BEPS)  ..
* 994 *
* 995 *                $ EQUIPMENT DESCRIPTION
* 996 *
* 997 *                $ HOT-WATER BOILER
* 998 *
* 999 * SBOIL1   =PLANT-EQUIPMENT  TYPE=HW-BOILER  SIZE=.457  .. $ SIZE FROM RUN 3
*1000 *
*1001 *          PLANT-PARAMETERS  HERM-REC-COND-TYPE=AIR  ..
*1002 *
*1003 *                $ AIR-COOLED RECIPROCATING CHILLER
*1004 *
*1005 * CHIL1    =PLANT-EQUIPMENT  TYPE=HERM-REC-CHLR  SIZE=.222  .. $ SIZE FROM RUN 3
*1006 *
*1007 *  PLANT-COSTS      PROJECT-LIFE=25  DISCOUNT-RATE=5 ..
*1008 *  ENERGY-RESOURCE  RESOURCE=ELECTRICITY  ..
*1009 *  ENERGY-RESOURCE  RESOURCE=NATURAL-GAS  ENERGY/UNIT=100000
*1010 *                   UNIT-NAME=THERMS   ..
*1011 * END  ..
*1012 * COMPUTE PLANT   ..
*1013 * INPUT ECONOMICS  ..
```

```
*1014 *
*1015 *          $ COST OF ADDED ROOF INSULATION
*1016 *
*1017 * ROOF-INSUL =COMPONENT-COST  UNIT-NAME='SQFT'  NUMBER-OF-UNITS=5000
*1018 *                            FIRST-COST=0.80   INSTALL-COST=0.30 ..
*1019 *
*1020 *          $ BASELINE COSTS (INCLUDES COST OF BASELINE PLANT EQUIPMENT)
*1021 *
*1022 *            BASELINE
*1023 *
*1024 *                $ following is from 'FIRST COST, INCLUDING INSTALLATION',
*1025 *                $ in Run 3, Report ES-B
*1026 *
*1027 *            FIRST-COST=29298
*1028 *
*1029 *                $ following is from total 'REPLACEMENTS'
*1030 *                $ in Run 3, Report ES-B
*1031 *
*1032 *            REPLACE-COST=0
*1033 *
*1034 *                $ following is from 'ENERGY COST THIS RUN'
*1035 *                $ in Run 3, Report ES-A
*1036 *
*1037 *            ENERGY-COST = (4369,4431,4493,4557,4622,4688,4756,
*1038 *                           4824,4894,4966,5038,5113,5188,5265,5344,5424,
*1039 *                           5505,5588,5673,5759,5847,5936,6027,6120,6215)
*1040 *
*1041 *                $ following is from 'OPRNS COST -- THIS RUN, TOTAL'
*1042 *                $ in Run 3, Report ES-A
*1043 *
*1044 *            OPERATIONS-COST = (249,238,314,216,205,272,
*1045 *                               186,412,236,161,212,146,139,828,126,279,
*1046 *                               159,109,104,531,94,124,85,189,108)
*1047 *
*1048 *                $ following is from 'ANNUAL ENERGY USE THIS RUN, AT SITE'
*1049 *                $ in Run 3, Report ES-C
*1050 *
*1051 *           ENERGY-USE-SITE = 363.93
*1052 *
*1053 *                $ following is from 'ANNUAL ENERGY USE THIS RUN, AT SOURCE'
*1054 *                $ in Run 3, Report ES-C
*1055 *
*1056 *           ENERGY-USE-SRC  = 709.67 ..
*1057 *
*1058 *
*1059 * ECONOMICS-REPORT  SUMMARY=(ALL-SUMMARY)  VERIFICATION=(ALL-VERIFICATION) ..
*1060 *
*1061 * ELEC-TARIFF=UTILITY-RATE   RESOURCE=ELECTRICITY
*1062 *                            ENERGY-CHG-SCH=ENERGY-SCH
*1063 *                            ESCALATION=7  ..
*1064 *
*1065 * ENERGY-SCH =SCHEDULE  THRU DEC 31 (WD) (1,8)(.05)          $OFF-PEAK
*1066 *                                        (9,12)(.06)         $SHOULDER
*1067 *                                        (13,17)(.07)        $PEAK
*1068 *                                        (18,22)(.06)        $SHOULDER
```

```
*1069 *                                        (23,24)(.05)        $OFF-PEAK
*1070 *
*1071 *                                 (SAT)  (1,8)(.05)          $OFF-PEAK
*1072 *                                        (9,17)(.06)         $SHOULDER
*1073 *                                        (18,24)(.05)        $OFF-PEAK
*1074 *
*1075 *                              (SUN,HOL) (1,24)(.05)  ..     $OFF-PEAK
*1076 *
*1077 * GAS-RATE   =UTILITY-RATE   RESOURCE=NATURAL-GAS
*1078 *                            ENERGY-CHG = .6  ..
*1079 *
*1080 * END  ..
*1081 * COMPUTE ECONOMICS  ..
*1082 * STOP ..
```

NUMBER OF SPACES 6 EXTERIOR 5 INTERIOR 1

SPACE	SPACE*FLOOR MULTIPLIER	SPACE TYPE	AZIMUTH	LIGHTING (WATT / SQFT)	PEOPLE	EQUIP (WATT / SQFT)	INFILTRATION METHOD	AIR CHANGES PER HOUR	AREA (SQFT)	VOLUME (CUFT)
PLENUM-1	1.0	EXT	0.0	0.00	0.0	0.00	NO-INFILT.	0.00	5000.00	10000.00
SPACE1-1	1.0	EXT	0.0	1.50	11.0	1.00	AIR-CHANGE	0.25	1056.00	8448.00
SPACE2-1	1.0	EXT	0.0	1.50	5.0	1.00	AIR-CHANGE	0.25	456.00	3648.00
SPACE3-1	1.0	EXT	0.0	1.50	11.0	1.00	AIR-CHANGE	0.25	1056.00	8448.00
SPACE4-1	1.0	EXT	0.0	1.50	5.0	1.00	AIR-CHANGE	0.25	456.00	3648.00
SPACE5-1	1.0	INT	0.0	1.50	20.0	1.00	AIR-CHANGE	0.25	1976.00	15808.00
BUILDING TOTALS					52.0				10000.00	50000.00

NUMBER OF EXTERIOR SURFACES 9 RECTANGULAR 9 OTHER 0
(U-VALUE INCLUDES OUTSIDE AIR FILM; WINDOW INCLUDES FRAME, IF DEFINED)

SURFACE	SPACE	WINDOWS U-VALUE (BTU/HR-SQFT-F)	WINDOWS AREA (SQFT)	WALL U-VALUE (BTU/HR-SQFT-F)	WALL AREA (SQFT)	WALL+WINDOWS U-VALUE (BTU/HR-SQFT-F)	WALL+WINDOWS AREA (SQFT)	AZIMUTH
WALL-1PB	PLENUM-1	0.000	0.00	0.067	200.00	0.067	200.00	NORTH
BACK-1	SPACE3-1	0.565	229.00	0.067	571.00	0.210	800.00	NORTH
RIGHT-1	SPACE2-1	0.467	100.00	0.067	300.00	0.167	400.00	EAST
WALL-1PR	PLENUM-1	0.000	0.00	0.067	100.00	0.067	100.00	EAST
WALL-1PF	PLENUM-1	0.000	0.00	0.067	200.00	0.067	200.00	SOUTH
FRONT-1	SPACE1-1	0.587	244.00	0.067	556.00	0.226	800.00	SOUTH
WALL-1PL	PLENUM-1	0.000	0.00	0.067	100.00	0.067	100.00	WEST
LEFT-1	SPACE4-1	0.467	100.00	0.067	300.00	0.167	400.00	WEST
TOP-1	PLENUM-1	0.000	0.00	0.047	5000.00	0.047	5000.00	ROOF
F1-1	SPACE1-1	0.000	0.00	0.050	1056.00	0.050	1056.00	UNDERGRND
F2-1	SPACE2-1	0.000	0.00	0.270	456.00	0.270	456.00	UNDERGRND
F3-1	SPACE3-1	0.000	0.00	0.050	1056.00	0.050	1056.00	UNDERGRND
F4-1	SPACE4-1	0.000	0.00	0.050	456.00	0.050	456.00	UNDERGRND
F5-1	SPACE5-1	0.000	0.00	0.050	1976.00	0.050	1976.00	UNDERGRND

	AVERAGE U-VALUE/WINDOWS (BTU/HR-SQFT-F)	AVERAGE U-VALUE/WALLS (BTU/HR-SQFT-F)	AVERAGE U-VALUE WALLS+WINDOWS (BTU/HR-SQFT-F)	WINDOW AREA (SQFT)	WALL AREA (SQFT)	WINDOW+WALL AREA (SQFT)
NORTH	0.565	0.067	0.181	229.00	771.00	1000.00
EAST	0.467	0.067	0.147	100.00	400.00	500.00
SOUTH	0.587	0.067	0.194	244.00	756.00	1000.00
WEST	0.467	0.067	0.147	100.00	400.00	500.00
ROOF	0.000	0.047	0.047	0.00	5000.00	5000.00
ALL WALLS	0.544	0.067	0.174	673.00	2327.00	3000.00
WALLS+ROOFS	0.544	0.053	0.095	673.00	7327.00	8000.00
UNDERGRND	0.000	0.070	0.070	0.00	5000.00	5000.00
BUILDING	0.544	0.060	0.085	673.00	12327.00	13000.00

*** BUILDING ***

FLOOR AREA	5000	SQFT	465	SQMT
VOLUME	50000	CUFT	1416	CUMT

	COOLING LOAD		HEATING LOAD	
TIME	AUG 19 6PM		FEB 4 6AM	
DRY-BULB TEMP	90F	32C	7F	-14C
WET-BULB TEMP	71F	22C	6F	-14C

	SENSIBLE (KBTU/H)	SENSIBLE (KW)	LATENT (KBTU/H)	LATENT (KW)	SENSIBLE (KBTU/H)	SENSIBLE (KW)
WALL CONDUCTION	4.297	1.259	0.000	0.000	-7.004	-2.052
ROOF CONDUCTION	0.000	0.000	0.000	0.000	0.000	0.000
WINDOW GLASS+FRM COND	8.963	2.626	0.000	0.000	-21.909	-6.419
WINDOW GLASS SOLAR	29.977	8.783	0.000	0.000	1.242	0.364
DOOR CONDUCTION	0.000	0.000	0.000	0.000	0.000	0.000
INTERNAL SURFACE COND	0.000	0.000	0.000	0.000	0.000	0.000
UNDERGROUND SURF COND	-1.401	-0.411	0.000	0.000	-11.561	-3.387
OCCUPANTS TO SPACE	11.607	3.401	6.776	1.985	0.001	0.000
LIGHT TO SPACE	17.920	5.251	0.000	0.000	1.026	0.301
EQUIPMENT TO SPACE	8.872	2.599	0.000	0.000	0.830	0.243
PROCESS TO SPACE	0.000	0.000	0.000	0.000	0.000	0.000
INFILTRATION	0.000	0.000	0.000	0.000	-9.685	-2.838
TOTAL	80.234	23.508	6.776	1.985	-47.060	-13.788
TOTAL LOAD	87.009 KBTU/H		25.494 KW		-47.060 KBTU/H	-13.788 KW
TOTAL LOAD / AREA	17.40BTU/H.SQFT		54.882 W /SQMT		9.412BTU/H.SQFT	29.684 W /SQMT

```
*****************************************************************
*                                                               *
*  NOTE  1)THE ABOVE LOADS EXCLUDE OUTSIDE VENTILATION AIR      *
*  ----     LOADS                                               *
*        2)TIMES GIVEN IN STANDARD TIME FOR THE LOCATION        *
*          IN CONSIDERATION                                     *
*                                                               *
*****************************************************************
```

SIMPLE STRUCTURE RUN 3A, CHICAGO INCREASED ROOF INSULATION DOE-2.1E-001 Thu Nov 4 16:29:40 1993LDL RUN 4
DESIGN-DAY SIZING OF VAV SYSTEM SHOW ALL REPORTS
REPORT- LS-D BUILDING MONTHLY LOADS SUMMARY WEATHER FILE- TRY CHICAGO

	COOLING						HEATING						ELEC	
MONTH	COOLING ENERGY (MBTU)	TIME OF MAX DY	TIME OF MAX HR	DRY-BULB TEMP	WET-BULB TEMP	MAXIMUM COOLING LOAD (KBTU/HR)	HEATING ENERGY (MBTU)	TIME OF MAX DY	TIME OF MAX HR	DRY-BULB TEMP	WET-BULB TEMP	MAXIMUM HEATING LOAD (KBTU/HR)	ELEC-TRICAL ENERGY (KWH)	MAXIMUM ELEC LOAD (KW)
JAN	4.49885	25	16	48.F	42.F	46.997	-12.798	7	5	2.F	2.F	-45.880	3027.	12.000
FEB	4.07415	15	16	31.F	26.F	48.481	-11.796	4	6	7.F	6.F	-47.060	2654.	12.000
MAR	5.82094	5	17	57.F	46.F	48.474	-8.775	24	6	8.F	7.F	-44.483	2936.	12.000
APR	11.70507	26	15	78.F	61.F	65.887	-2.922	8	6	32.F	29.F	-23.486	2994.	12.000
MAY	14.89968	20	15	77.F	68.F	66.853	-1.170	9	5	40.F	38.F	-13.599	3027.	12.000
JUN	18.99737	20	15	90.F	77.F	74.772	-0.193	17	5	54.F	49.F	-5.237	2812.	12.000
JUL	24.94236	9	15	94.F	74.F	79.777	-0.004	5	5	60.F	54.F	-0.472	3027.	12.000
AUG	22.82894	19	17	90.F	71.F	80.234	-0.009	5	5	55.F	54.F	-2.754	3027.	12.000
SEP	17.11742	26	16	82.F	61.F	76.772	-0.483	23	6	37.F	34.F	-12.273	2812.	12.000
OCT	13.00402	10	16	68.F	53.F	70.816	-1.900	21	6	30.F	29.F	-18.011	3027.	12.000
NOV	6.24292	8	15	60.F	49.F	64.713	-6.776	15	6	28.F	26.F	-30.286	2720.	12.000
DEC	4.20004	10	15	41.F	35.F	49.924	-11.676	9	6	14.F	13.F	-38.725	2936.	12.000
TOTAL	148.332						-58.501						34996.	
MAX						80.234						-47.060		12.000

SYSTEM NAME	SYSTEM TYPE	ALTITUDE MULTIPLIER	FLOOR AREA (SQFT)	MAX PEOPLE
SYST-1	VAVS	1.020	5000.0	52.

SUPPLY FAN (CFM)	ELEC (KW)	DELTA-T (F)	RETURN FAN (CFM)	ELEC (KW)	DELTA-T (F)	OUTSIDE AIR RATIO	COOLING CAPACITY (KBTU/HR)	SENSIBLE (SHR)	HEATING CAPACITY (KBTU/HR)	COOLING EIR (BTU/BTU)	HEATING EIR (BTU/BTU)
7513.	8.646	3.6	0.	0.000	0.0	0.141	216.189	0.804	-1.917	0.00	0.37

ZONE NAME	SUPPLY FLOW (CFM)	EXHAUST FLOW (CFM)	FAN (KW)	MINIMUM FLOW RATIO	OUTSIDE AIR FLOW (CFM)	COOLING CAPACITY (KBTU/HR)	SENSIBLE (SHR)	EXTRACTION RATE (KBTU/HR)	HEATING CAPACITY (KBTU/HR)	ADDITION RATE (KBTU/HR)	MULTIPLIER
SPACE5-1	1850.	0.	0.000	0.300	408.	0.00	0.00	31.97	-115.90	-95.92	1.0
SPACE1-1	2176.	0.	0.000	0.300	224.	0.00	0.00	37.60	-136.28	-112.79	1.0
SPACE2-1	976.	0.	0.000	0.300	102.	0.00	0.00	16.87	-61.15	-50.60	1.0
SPACE3-1	1539.	0.	0.000	0.300	224.	0.00	0.00	26.60	-96.41	-79.79	1.0
SPACE4-1	972.	0.	0.000	0.300	102.	0.00	0.00	16.80	-60.89	-50.39	1.0
PLENUM-1	0.	0.	0.000	0.000	0.	0.00	0.00	0.00	0.00	0.00	1.0

SIMPLE STRUCTURE RUN 3A, CHICAGO INCREASED ROOF INSULATION DOE-2.1E-001 Thu Nov 4 16:29:40 1993SDL RUN 2
DESIGN-DAY SIZING OF VAV SYSTEM SHOW ALL REPORTS
REPORT- SS-A SYSTEM MONTHLY LOADS SUMMARY FOR SYST-1 WEATHER FILE- TRY CHICAGO

	COOLING						HEATING						ELEC	
MONTH	COOLING ENERGY (MBTU)	TIME OF MAX DY	TIME OF MAX HR	DRY-BULB TEMP	WET-BULB TEMP	MAXIMUM COOLING LOAD (KBTU/HR)	HEATING ENERGY (MBTU)	TIME OF MAX DY	TIME OF MAX HR	DRY-BULB TEMP	WET-BULB TEMP	MAXIMUM HEATING LOAD (KBTU/HR)	ELEC-TRICAL ENERGY (KWH)	MAXIMUM ELEC LOAD (KW)
JAN	0.00000					0.000	-24.696	7	8	-1.F	-1.F	-393.441	3292.	12.886
FEB	0.00000					0.000	-19.176	4	8	7.F	6.F	-395.605	2871.	12.862
MAR	0.00000					0.000	-11.439	25	8	14.F	12.F	-357.888	3147.	12.862
APR	1.64851	29	18	69.F	65.F	52.931	-2.702	1	8	43.F	39.F	-190.842	3194.	12.862
MAY	4.78337	21	14	85.F	75.F	108.533	-0.073	9	9	43.F	39.F	-22.369	3261.	13.490
JUN	13.31118	20	17	90.F	78.F	144.459	0.000					0.000	3192.	14.251
JUL	25.36230	15	8	72.F	70.F	208.830	0.000					0.000	3779.	18.752
AUG	21.61059	26	15	90.F	75.F	152.463	0.000					0.000	3616.	16.577
SEP	9.14995	11	15	87.F	72.F	120.025	-0.007	23	9	39.F	36.F	-6.566	3133.	14.966
OCT	2.83521	4	17	78.F	61.F	52.819	-0.704	21	8	30.F	29.F	-157.061	3223.	12.862
NOV	0.37585	1	16	72.F	59.F	49.879	-9.119	18	8	34.F	34.F	-244.497	2904.	12.862
DEC	0.00000					0.000	-18.609	9	8	13.F	12.F	-353.233	3161.	12.862
TOTAL	79.077						-86.524						38773.	
MAX						208.830						-395.605		18.752

	-----COOLING-----				---HEATING---			DAY COOLING PEAK			
	JUL 15				FEB 4			JUL 8			
HOUR	HOURLY COOLING LOAD (KBTU)	SENSIBLE HEAT RATIO	DRY-BULB TEMP	WET-BULB TEMP	HOURLY HEATING LOAD (KBTU)	DRY-BULB TEMP	WET-BULB TEMP	HOURLY COOLING LOAD (KBTU)	SENSIBLE HEAT RATIO	DRY-BULB TEMP	WET-BULB TEMP
1	0.000	0.000	77.F	72.F	0.000	11.F	9.F	0.000	0.000	76.F	68.F
2	0.000	0.000	77.F	72.F	-100.562	11.F	9.F	0.000	0.000	76.F	68.F
3	0.000	0.000	76.F	71.F	0.000	10.F	9.F	0.000	0.000	75.F	68.F
4	0.000	0.000	75.F	71.F	-108.452	9.F	8.F	0.000	0.000	74.F	68.F
5	0.000	0.000	73.F	70.F	0.000	8.F	7.F	0.000	0.000	73.F	67.F
6	0.000	0.000	72.F	70.F	-119.407	7.F	6.F	0.000	0.000	72.F	67.F
7	208.830 *	0.881	72.F	70.F	0.000	6.F	5.F	191.575 *	0.928	72.F	67.F
8	199.172 *	0.861	75.F	70.F	-395.605	7.F	6.F	196.065 *	0.870	77.F	70.F
9	177.857	0.873	76.F	69.F	-246.265	7.F	6.F	188.506	0.861	83.F	72.F
10	173.407	0.883	78.F	69.F	-194.114	10.F	9.F	193.424	0.842	86.F	74.F
11	169.101	0.880	80.F	70.F	-163.056	14.F	13.F	186.416	0.861	89.F	74.F
12	154.657	0.893	81.F	70.F	-139.462	18.F	17.F	169.024	0.893	90.F	73.F
13	161.425	0.865	82.F	71.F	-118.089	23.F	21.F	173.001	0.886	91.F	73.F
14	158.620	0.887	83.F	70.F	-103.090	24.F	22.F	174.959	0.887	92.F	73.F
15	152.590	0.893	81.F	69.F	-90.578	24.F	21.F	177.597	0.866	92.F	74.F
16	144.039	0.885	80.F	69.F	-85.341	23.F	22.F	166.044	0.891	93.F	73.F
17	142.142	0.873	79.F	69.F	-80.663	22.F	21.F	162.546	0.889	93.F	73.F
18	0.000	0.000	77.F	67.F	-78.142	21.F	20.F	0.000	0.000	92.F	73.F
19	0.000	0.000	76.F	67.F	0.000	20.F	19.F	0.000	0.000	90.F	72.F
20	0.000	0.000	74.F	66.F	0.000	19.F	17.F	0.000	0.000	83.F	70.F
21	0.000	0.000	71.F	65.F	0.000	20.F	18.F	0.000	0.000	82.F	68.F
22	0.000	0.000	69.F	64.F	0.000	21.F	19.F	0.000	0.000	82.F	70.F
23	0.000	0.000	67.F	63.F	0.000	22.F	20.F	0.000	0.000	82.F	70.F
24	0.000	0.000	67.F	63.F	0.000	22.F	20.F	0.000	0.000	80.F	69.F
SUM								1979.156			
MAX	208.830				-395.605						

SYSTEM-TYPE	VAVS	SQFT/TON	287.3
COOLING PEAK	41.77 (BTU/HR- SQFT)	HEATING PEAK	-79.12 (BTU/HR- SQFT)
SUPPLY AIR PEAK FLOW	1.50 (CFM/SQFT)	MIN-OA/PERSON	20.40 (CFM)
OA FRAC AT CLG PEAK	0.156	OA FRAC AT HTG PEAK	0.211

* ASTERISKS INDICATE HOURS LOADS NOT MET

EQUIPMENT	SIZE (MBTU/H)	NUMBER INSTD	NUMBER AVAIL	SIZE (MBTU/H)	NUMBER INSTD	NUMBER AVAIL	SIZE (MBTU/H)	NUMBER INSTD	NUMBER AVAIL	SIZE (MBTU/H)	NUMBER INSTD	NUMBER AVAIL	SIZE (MBTU/H)	NUMBER INSTD	NUMBER AVAIL	SIZE (MBTU/H)	NUMBER INSTD	NUMBER AVAIL
HW-BOILER	0.457	1	1															
HERH-REC-CHLR	0.222	1	1															

	SITE ENERGY												SOURCE
	2	3	4	5	6	7	8	9	10	11	12	13	14
MONTH	TOTAL HEAT LOAD (MBTU)	TOTAL COOLING LOAD (MBTU)	TOTAL ELECTR LOAD (MWH)	RCVRED ENERGY (MBTU)	WASTED RCVRABL ENERGY (MBTU)	FUEL INPUT COOLING (MBTU)	ELEC INPUT COOLING (MWH)	FUEL INPUT HEATING (MBTU)	ELEC INPUT HEATING (MWH)	FUEL INPUT ELECT (MBTU)	TOTAL FUEL INPUT (MBTU)	TOTAL SITE ENERGY (MBTU)	TOTAL SOURCE ENERGY (MBTU)
JAN	25.4	0.0	4.0	0.0	0.0	0.0	0.0	39.8	0.7	0.0	39.8	53.4	80.5
FEB	19.8	0.0	3.4	0.0	0.0	0.0	0.0	30.9	0.5	0.0	30.9	42.5	65.7
MAR	12.1	0.0	3.5	0.0	0.0	0.0	0.0	19.1	0.4	0.0	19.1	31.1	55.2
APR	3.0	1.9	3.6	0.0	0.0	0.0	0.3	4.8	0.1	0.0	4.8	17.2	41.8
MAY	0.1	5.3	4.0	0.0	0.0	0.0	0.7	0.2	0.0	0.0	0.2	13.8	41.1
JUN	0.0	14.2	5.0	0.0	0.0	0.0	1.8	0.0	0.0	0.0	0.0	17.0	51.1
JUL	0.0	26.4	6.8	0.0	0.0	0.0	3.0	0.0	0.0	0.0	0.0	23.1	69.2
AUG	0.0	22.6	6.3	0.0	0.0	0.0	2.7	0.0	0.0	0.0	0.0	21.4	64.3
SEP	0.0	9.8	4.4	0.0	0.0	0.0	1.3	0.0	0.0	0.0	0.0	15.0	45.0
OCT	0.8	3.2	3.8	0.0	0.0	0.0	0.5	1.3	0.0	0.0	1.3	14.1	39.8
NOV	9.6	0.4	3.3	0.0	0.0	0.0	0.1	15.3	0.3	0.0	15.3	26.5	48.9
DEC	19.2	0.0	3.7	0.0	0.0	0.0	0.0	30.1	0.5	0.0	30.1	42.7	67.9
TOTAL	90.1	83.8	51.6	0.0	0.0	0.0	10.3	141.6	2.6	0.0	141.6	317.8	670.4

HEATING LOADS	MBTU SUPPLIED	PCT OF TOTAL LOAD
HW-BOILER	90.1	100.0
LOAD SATISFIED	90.1	100.0
TOTAL LOAD ON PLANT	90.1	

COOLING LOADS	MBTU SUPPLIED	PCT OF TOTAL LOAD
HERM-REC-CHLR	83.8	100.0
LOAD SATISFIED	83.8	100.0
TOTAL LOAD ON PLANT	83.8	

ELECTRICAL LOADS	KWH SUPPLIED	PCT OF TOTAL LOAD
ELECTRICITY	51640.9	100.0
LOAD SATISFIED	51640.9	100.0
TOTAL LOAD ON PLANT	51639.6	

SUMMARY OF LOADS MET

TYPE OF LOAD	TOTAL LOAD (MBTU)	LOAD SATISFIED (MBTU)	TOTAL OVERLOAD (MBTU)	PEAK OVERLOAD (MBTU)	HOURS OVERLOADED
HEATING LOADS	90.1	90.1	0.000	0.000	0
COOLING LOADS	83.8	83.8	0.000	0.000	0
ELECTRICAL LOADS	176.2	176.2	0.000	0.000	0

ENERGY TYPE:	ELECTRICITY	NATURAL-GAS
UNITS: MBTU		
CATEGORY OF USE		
AREA LIGHTS	74.7	0.0
MISC EQUIPMT	44.7	0.0
SPACE HEAT	6.9	141.6
SPACE COOL	26.6	0.0
HEAT REJECT	5.9	0.0
PUMPS & MISC	4.6	0.0
VENT FANS	12.9	0.0
TOTAL	176.2	141.6

TOTAL SITE ENERGY	317.85 MBTU	63.6 KBTU/SQFT-YR GROSS-AREA	63.6 KBTU/SQFT-YR NET-AREA
TOTAL SOURCE ENERGY	670.40 MBTU	134.1 KBTU/SQFT-YR GROSS-AREA	134.1 KBTU/SQFT-YR NET-AREA

PERCENT OF HOURS ANY SYSTEM ZONE OUTSIDE OF THROTTLING RANGE = 1.4
PERCENT OF HOURS ANY PLANT LOAD NOT SATISFIED = 0.0

NOTE: ENERGY IS APPORTIONED HOURLY TO ALL END-USE CATEGORIES.

LIFE-CYCLE COSTING PARAMETERS

DISCOUNT RATE (PERCENT)	LABOR INFLATION RATE (PERCENT)	MATERIALS INFLATION RATE (PERCENT)	PROJECT LIFE (YRS)
5.0	0.0	0.0	25.0

BUILDING COMPONENT COST INPUT DATA (CURRENT DOLLARS)

COST NAME	NUMBER OF UNITS	UNIT NAME	LIFE (YRS)	UNIT FIRST COST ($)	UNIT INSTALL -ATION COST ($)	UNIT ANNUAL MAINT COST ($)	UNIT MINOR OVERHAUL COST ($)	MINOR OVERHAUL INTERVAL (YRS)	UNIT MAJOR OVERHAUL COST ($)	MAJOR OVERHAUL INTERVAL (YRS)
ROOF-INSUL	5000.0	SQFT	999.0	0.80	0.30	0.00	0.00	999.00	0.00	999.00

	ENERGY ($)			OPERATIONS ($)					TOTAL SAVINGS-
					OPRNS COST -- THIS RUN				
YEAR	ENERGY COST BASELINE	ENERGY COST THIS RUN	ENERGY COST SAVINGS	OPRNS COST BASELINE	PLANT	BUILDING	TOTAL	OPRNS COST SAVINGS	ENERGY PLUS OPRNS
1	4369.	4111.	258.	249.	249.	0.	249.	0.	258.
2	4431.	4173.	258.	238.	238.	0.	238.	0.	259.
3	4493.	4236.	257.	314.	226.	0.	226.	88.	345.
4	4557.	4301.	256.	216.	215.	0.	215.	1.	257.
5	4622.	4366.	256.	205.	205.	0.	205.	0.	256.
6	4688.	4433.	255.	272.	195.	0.	195.	77.	331.
7	4756.	4502.	254.	186.	186.	0.	186.	0.	254.
8	4824.	4571.	253.	412.	177.	0.	177.	235.	488.
9	4894.	4642.	252.	236.	169.	0.	169.	67.	319.
10	4966.	4714.	252.	161.	161.	0.	161.	0.	252.
11	5038.	4788.	250.	212.	153.	0.	153.	59.	309.
12	5113.	4863.	250.	146.	146.	0.	146.	0.	250.
13	5188.	4939.	249.	139.	139.	0.	139.	0.	249.
14	5265.	5017.	248.	828.	132.	0.	132.	696.	944.
15	5344.	5097.	247.	126.	126.	0.	126.	0.	247.
16	5424.	5177.	247.	279.	120.	0.	120.	159.	406.
17	5505.	5260.	245.	159.	114.	0.	114.	45.	290.
18	5588.	5344.	244.	109.	109.	0.	109.	0.	244.
19	5673.	5429.	244.	104.	104.	0.	104.	0.	244.
20	5759.	5517.	242.	531.	99.	0.	99.	432.	675.
21	5847.	5606.	241.	94.	94.	0.	94.	0.	241.
22	5936.	5696.	240.	124.	90.	0.	90.	34.	274.
23	6027.	5789.	238.	85.	85.	0.	85.	0.	238.
24	6120.	5883.	237.	189.	81.	0.	81.	108.	345.
25	6215.	5978.	237.	108.	77.	0.	77.	31.	267.
TOTALS($)	130642.	124431.	6211.	5722.	3691.	0.	3691.	2031.	8243.

LIFE-CYCLE BUILDING AND PLANT NON-ENERGY COSTS ($)

COST NAME	FIRST COST (INCLUDING INSTALLATION)	REPLACEMENTS	OPERATIONS	TOTAL	INVESTMENT (FIRST COST PLUS REPLACEMENTS)
ROOF-INSUL	5500.	0.	0.	5500.	5500.
PLANT EQUIPMENT	29273.	0.	3691.	32964.	29273.
TOTALS	34773.	0.	3691.	38464.	34773.

ENERGY SAVINGS

	ANNUAL ENERGY USE BASELINE (MBTU)	(MWH)	ANNUAL ENERGY USE THIS RUN (MBTU)	(MWH)	ANNUAL ENERGY SAVINGS (MBTU)	(MWH)	ANNUAL ENERGY SAVINGS (PCT)
AT SITE	363.93	106.63	317.85	93.13	46.08	13.50	12.7
AT SOURCE	709.67	207.93	670.40	196.43	39.27	11.51	5.5

INVESTMENT STATISTICS

PROJECT LIFE 25.0 YEARS

INVESTMENT THIS RUN ($)	BASELINE REPLACEMENT COSTS ($)	INCREMENTAL INVESTMENT ($)	COST SAVINGS ($)	RATIO OF SAVINGS TO INCREMENTAL INVESTMENT (SIR)	DISCOUNTED PAYBACK PERIOD (YEARS)	RATIO OF LIFE CYCLE ENERGY SAVINGS (AT SITE) TO INCREMENTAL INVESTMENT (MBTU/$)	(MWH/$)	RATIO OF LIFE-CYCLE ENERGY SAVINGS (AT SOURCE) TO INCREMENTAL INVESTMENT (MBTU/$)	(MWH/$)
34773.	0.	5475.	8243.	1.51	16.18	0.21	0.06	0.18	0.05

OVERALL LIFE-CYCLE COSTS ($)

	FIRST COST	OPRNS COST	REPLACEMENTS	ENERGY COST	T O T A L
BASELINE	29298.	5722.	0.	130642.	165662.
THIS RUN	34773.	3691.	0.	124431.	162894.
SAVINGS($)	-5475.	2031.	0.	6211.	2768.
(PCT)	-18.7	35.5	0.0	4.8	1.7

UTILITY-RATE	RESOURCE	METERS	METERED ENERGY UNITS/YR	TOTAL CHARGE ($)	VIRTUAL RATE ($/UNIT)	RATE USED ALL YEAR?
ELEC-TARIFF	ELECTRICITY	1 2 3 4 5	51641. KWH	3261.	0.0631	YES
GAS-RATE	NATURAL-GAS	1 2 3 4 5	1416. THERMS	850.	0.6000	YES
				==========		
				4111.		

ENERGY COST/GROSS BLDG AREA: 0.82
ENERGY COST/NET BLDG AREA: 0.82

UTILITY-RATE: ELEC-TARIFF

RESOURCE: ELECTRICITY
METERS: 1 2 3 4 5
POWER-FACTOR: 0.80

DEMAND-WINDOW: HOUR
BILLING-DAY: 31
EXCESS-KVAR-FRAC: 0.30

3413. BTU/KWH
RATE-LIMITATION: 0.0000
EXCESS-KVAR-CHG: 0.0000

RATE-QUALIFICATIONS

MIN-ENERGY: 0.0
MAX-ENERGY: 0.0
MIN-DEMAND: 0.0
MAX-DEMAND: 0.0
QUALIFY-RATE: ALL-MONTHS
USE-MIN-QUAL: NO

BLOCK-CHARGES

DEMAND-RATCHETS

MIN-MON-RATCHETS

MONTH	METERED ENERGY KWH	BILLING ENERGY KWH	METERED DEMAND KW	BILLING DEMAND KW	ENERGY CHARGE ($)	DEMAND CHARGE ($)	ENERGY CST ADJ ($)	TAXES ($)	SURCHRG ($)	FIXED CHARGE ($)	MINIMUM CHARGE ($)	VIRTUAL RATE ($/UNIT)	TOTAL CHARGE ($)
JAN	3972	3972	16.3	16.3	247	0	0	0	0	0	0	0.0622	247
FEB	3400	3400	16.2	16.2	212	0	0	0	0	0	0	0.0623	212
MAR	3525	3525	16.2	16.2	220	0	0	0	0	0	0	0.0624	220
APR	3613	3613	20.1	20.1	228	0	0	0	0	0	0	0.0632	228
MAY	3993	3993	26.4	26.4	253	0	0	0	0	0	0	0.0635	253
JUN	4992	4992	30.4	30.4	318	0	0	0	0	0	0	0.0637	318
JUL	6757	6757	37.6	37.6	430	0	0	0	0	0	0	0.0636	430
AUG	6276	6276	32.8	32.8	400	0	0	0	0	0	0	0.0638	400
SEP	4396	4396	28.7	28.7	280	0	0	0	0	0	0	0.0637	280
OCT	3755	3755	20.2	20.2	238	0	0	0	0	0	0	0.0634	238
NOV	3274	3274	20.1	20.1	204	0	0	0	0	0	0	0.0624	204
DEC	3688	3688	16.2	16.2	230	0	0	0	0	0	0	0.0624	230
TOTAL	51641	51641	37.6		3261	0	0	0	0	0		0.0631	3261

SIMPLE STRUCTURE RUN 3A, CHICAGO INCREASED ROOF INSULATION DOE-2.1E-001 Thu Nov 4 16:29:40 1993EDL RUN 2
DESIGN-DAY SIZING OF VAV SYSTEM SHOW ALL REPORTS
REPORT- ES-E SUMMARY OF UTILITY-RATE: GAS-RATE

UTILITY-RATE: GAS-RATE RESOURCE: NATURAL-GAS DEMAND-WINDOW: HOUR 100000. BTU/THERMS
METERS: 1 2 3 4 5 BILLING-DAY: 31 RATE-LIMITATION: 0.0000

RATE-QUALIFICATIONS

MIN-ENERGY: 0.0
MAX-ENERGY: 0.0
MIN-DEMAND: 0.0
MAX-DEMAND: 0.0
QUALIFY-RATE: ALL-MONTHS
USE-MIN-QUAL: NO

BLOCK-CHARGES

DEMAND-RATCHETS

MIN-MON-RATCHETS

MONTH	METERED ENERGY THERMS	BILLING ENERGY THERMS	METERED DEMAND THERMS	BILLING DEMAND THERMS	ENERGY CHARGE ($)	DEMAND CHARGE ($)	ENERGY CST ADJ ($)	TAXES ($)	SURCHRG ($)	FIXED CHARGE ($)	MINIMUM CHARGE ($)	VIRTUAL RATE ($/UNIT)	TOTAL CHARGE ($)
JAN	398	398	5.1	5.1	239	0	0	0	0	0	0	0.6000	239
FEB	309	309	5.1	5.1	185	0	0	0	0	0	0	0.6000	185
MAR	191	191	4.7	4.7	115	0	0	0	0	0	0	0.6000	115
APR	48	48	2.8	2.8	29	0	0	0	0	0	0	0.6000	29
MAY	2	2	0.4	0.4	1	0	0	0	0	0	0	0.6000	1
JUN	0	0	0.0	0.0	0	0	0	0	0	0	0	0.0000	0
JUL	0	0	0.0	0.0	0	0	0	0	0	0	0	0.0000	0
AUG	0	0	0.0	0.0	0	0	0	0	0	0	0	0.0000	0
SEP	0	0	0.2	0.2	0	0	0	0	0	0	0	0.6000	0
OCT	13	13	2.4	2.4	8	0	0	0	0	0	0	0.6000	8
NOV	153	153	3.4	3.4	92	0	0	0	0	0	0	0.6000	92
DEC	301	301	4.6	4.6	181	0	0	0	0	0	0	0.6000	181
TOTAL	1416	1416	5.1		850	0	0	0	0	0		0.6000	850

31-Story Office Building

Plan and elevation views. Each floor is divided into four perimeter zones and one core zone.

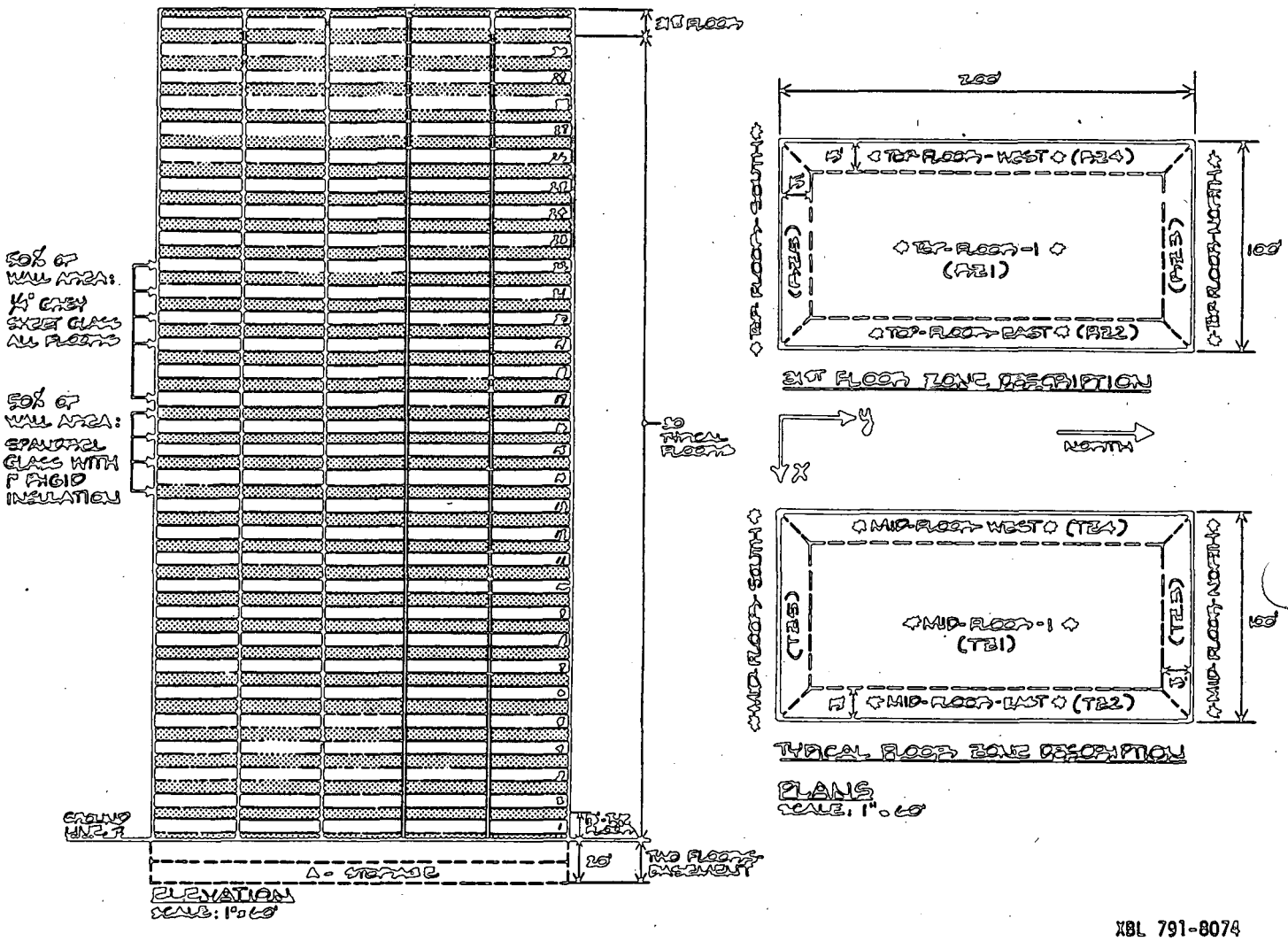

XBL 791-8074

31-Story Office Building, LOAD1

DrawBDL axonometric view of top floor and mid-floor (multiplier = 30) as input into BDL. The roof and interior surfaces are not shown.

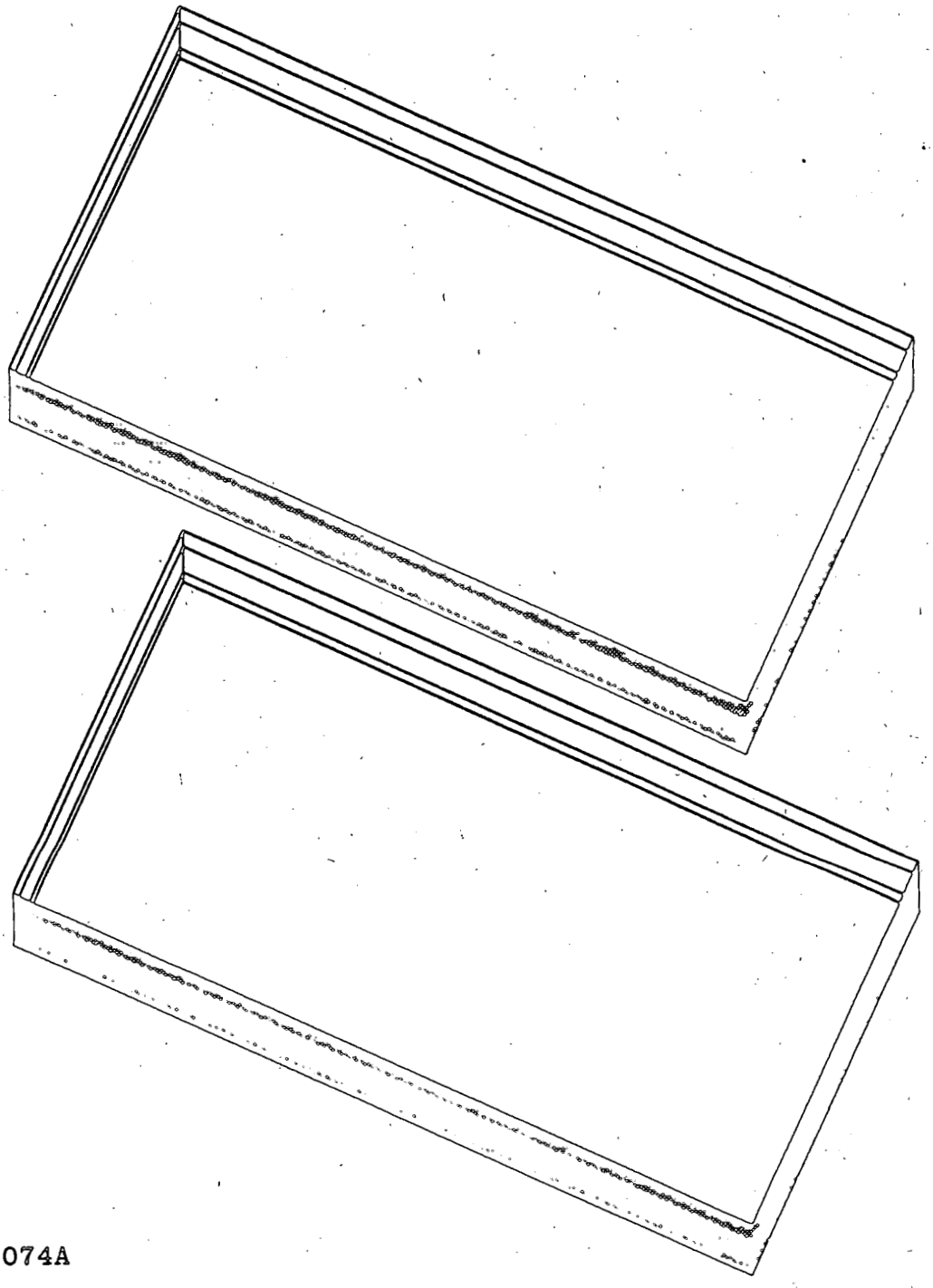

791-8074A

L D L P R O C E S S O R I N P U T D A T A

Wed Nov 10 14:35:12 1993LDL RUN 1

```
*   2 * TITLE         LINE-1 *31-STORY OFFICE BLDG, CHICAGO - LOAD1*
*   3 *               LINE-2 *STD ASHRAE WEIGHTING FACTORS *  ..
*   4 *
*   5 *                ABORT         ERRORS     ..
*   6 *                DIAGNOSTIC    WARNINGS   ..
*   7 *
*   8 *                LOADS-REPORT        SUMMARY=(LS-C,LS-D)        ..
*   9 *                RUN-PERIOD          JAN 1 1988  THRU  DEC 31 1988   ..
*  10 *                BUILDING-LOCATION   LATITUDE=42  LONGITUDE=88
*  11 *                                    TIME-ZONE=6  ALTITUDE=610 ..
*  12 *
*  13 *                      $ BUILDING DESCRIPTION
*  14 *
*  15 * $ STRUCTURE    STEEL FRAME WITH 4IN CONCRETE FLOORS AND ROOF.  31 OCCUPIED
*  16 * $             STORIES, 13FT FLOOR TO FLOOR HEIGHT, 9FT CEILINGS.  RETURN
*  17 * $             AIR CEILING PLENUMS ARE NOT DEFINED PER SE -- INPUT USES THE
*  18 * $             SIMPLER APPROACH OF RETURN-AIR-PATH = DUCT.
*  19 *
*  20 * $ CURTAIN WALL USING CODE-WORDS FROM DOE-2 LIBRARY ( REFERENCE MANUAL PART 2 )
*  21 * $             AND STARTING WITH OUTSIDE WORKING INWARD: 1/4IN SPANDREL GLASS
*  22 * $             ( NOT IN LIBRARY - SEE MATERIAL SPGL ); 2IN POLYSTRENE INSUL
*  23 * $             R-8 (IN35); STEEL BACKPANEL (AS01); 2IN AIRSPACE (AL21);
*  24 * $             3/4IN GYPSUM BOARD FINISH (GP03) .
*  25 *
*  26 * $ ROOF         ROOF GRAVEL (RG02); BUILT-UP ROOFING (BR01); 3IN ROOF INSUL R-8
*  27 * $             (IN76); 4IN CONCRETE (CC03); INSIDE-FILM-RESISTANCE .76 .
*  28 *
*  29 * $ WINDOWS      DOUBLE-GLAZED TINTED, SOLAR TRANSMITTANCE=.53, GLASS TYPE CODE=5.
*  30 * $             WINDOWS HAVE INSIDE BLINDS WITH A 70% PROBABILITY OF BEING PULLED
*  31 * $             IF TRANSMITTED DIRECT SOLAR RADIATION EXCEEDS 40BTUH PER SQFT.
*  32 * $             BLINDS ARE CONSIDERED TO BE REOPENED WITH A PROBABILITY OF 50%
*  33 * $             WHEN TRANSMITTED DIRECT SOLAR IS LESS THAN 40BTUH PER SQFT.
*  34 *
*  35 * $ INTERIORS    CEILINGS ARE SUSPENDED ACCOUSTIC TILE.
*  36 * $             PARTITIONS SIMULATE CONVECTIVE HEAT TRANSFER BETWEEN CORE AND
*  37 * $             PERIMETER SPACES USING A U-VALUE OF 1.5 BTUH/SQFT-F
*  38 *
*  39 * $ SPACE LOADS  LIGHTING IS RECESSED FLUORESCENT AT 1.5 WATTS/SQFT.
*  40 * $             OFFICE EQUIPMENT IS 1 WATTS/SQFT.
*  41 * $             PEOPLE: 100SQFT/PERSON FOR PERIMETER SPACES
*  42 * $                     200SQFT/PERSON FOR CORE AREAS.
*  43 * $             INFILTRATION IS .3 AIR CHANGES/HR FOR PERIMETER AREAS WHEN FANS
*  44 * $             ARE OFF, AND .06 AIR CHANGES/HR WHEN FANS ARE ON.
*  45 *
*  46 * $ HVAC DESCRIPTIONS ARE GIVEN WITH EACH INDIVIDUAL SYSTEM AND PLANT INPUT.
*  47 *
*  48 *                      $ MATERIALS NOT IN DOE-2 LIBRARY
*  49 *
*  50 * SPGS=MATERIAL      TH=.0208  COND=.590  DENS=172.  S-H=.20   ..
*  51 *
*  52 *                      $ WALL CONSTRUCTIONS
*  53 *
*  54 * ROOFER         LAYERS  MAT (RG02,BR01,IN76,CC03)  I-F-R .76  ..
*  55 * WALLER         LAYERS  MAT (SPGS,IN35,AS01,AL21,GP03)  ..
*  56 * RF            =CONSTRUCTION        LAYERS=ROOFER   ..
```

```
* 57 * WL1          =CONSTRUCTION       LAYERS=WALLER   ..
* 58 * BW           =CONSTRUCTION       U=.05   ..
* 59 * SB-U         =CONSTRUCTION       U=1.5   ..
* 60 *
* 61 *                     $ GLASS DESCRIPTION
* 62 *
* 63 * GT1           GLASS-TYPE  G-T-C 5  PANES 2  ..
* 64 *
* 65 *                     $ SCHEDULES
* 66 *
* 67 * OC1          =DAY-SCHEDULE       (1,8) (0.)          (9,10) (1.)
* 68 *                                  (11,13) (.8,.4,.8)  (14,24) (1.,1.,1.,
* 69 *                                                .3,.1,.1,.1,0.,0.,0.,0.)  ..
* 70 * OC2          =DAY-SCHEDULE       (1,24) (0.0)  ..
* 71 * PEOPLE       =WEEK-SCHEDULE      (MON,FRI)  OC1      (WEH)  OC2  ..
* 72 * OCCUP        =SCHEDULE           THRU DEC 31  PEOPLE   ..
* 73 *
* 74 * L1           =DAY-SCHEDULE       (1,6) (.05)         (7,24) (.1,.9,.9,
* 75 *                                  .95,.95,.95,.8,.8,.9,.9,.95,.8,.7,.6,
* 76 *                                  .4,.3,.2,.2)   ..
* 77 * L2           =DAY-SCHEDULE       (1,24) (.05)   ..
* 78 * LIGHTS       =WEEK-SCHEDULE      (MON,FRI)  L1       (WEH)  L2   ..
* 79 * LT1          =SCHEDULE           THRU DEC 31 LIGHTS   ..
* 80 *
* 81 * ES1          =DAY-SCHEDULE       (1,8) (0.)          (9,20) (.35,.50,
* 82 *                                  .55,.9,.6,.8,.7,.75,.3,.3,.5,.05)
* 83 *                                  (21,24) (0.0)   ..
* 84 * ES2          =DAY-SCHEDULE       (1,24) (0.0)  ..
* 85 * EQUIP        =WEEK-SCHEDULE      (MON,FRI)  ES1      (WEH)  ES2   ..
* 86 * EQ1          =SCHEDULE           THRU DEC 31  EQUIP   ..
* 87 *
* 88 * I1           =DAY-SCHEDULE       (1,7) (1.)          (8,18) (0.2)
* 89 *                                  (19,24) (1.)    ..
* 90 * I2           =DAY-SCHEDULE       (1,24) (1.)   ..
* 91 * INFILT       =WEEK-SCHEDULE      (MON,FRI)  I1       (WEH)  I2   ..
* 92 * INF1         =SCHEDULE           THRU DEC 31  INFILT   ..
* 93 *
* 94 * SHADE-MULT     =SCHEDULE THRU DEC 31 (ALL) (1,24) (.5)  ..
* 95 * CLOSE-SHADE   =SCHEDULE THRU DEC 31 (ALL) (1,24) (40)  ..
* 96 * OPEN-PROB     =SCHEDULE THRU DEC 31 (ALL) (1,24) (.5)  ..
* 97 *
* 98 *                  $ SPACE DESCRIPTIONS
* 99 *
* 100 * OFFICE       =SPACE-CONDITIONS   TEMPERATURE=(75)  FLOOR-WEIGHT=70
* 101 *                                 LIGHTING-W/SQFT=1.5  EQUIPMENT-W/SQFT=1
* 102 *                                 PEOPLE-HEAT-GAIN=450
* 103 *                                 EQUIP-SCHEDULE=EQ1  LIGHTING-SCHEDULE=LT1
* 104 *                                 PEOPLE-SCHEDULE=OCCUP  AIR-CHANGES/HR=.3
* 105 *                                 INF-SCHEDULE=INF1  LIGHT-TO-SPACE=.80
* 106 *                                 INF-METHOD=AIR-CHANGE
* 107 *                                 LIGHTING-TYPE=REC-FLUOR-RV   ..
* 108 *
* 109 * A-STORAGE     =SPACE              TEMPERATURE=(75)  FLOOR-WEIGHT=150
* 110 *                                 VOLUME=400000  AREA=20000
* 111 *                                 LIGHTING-W/SQFT=1.5
* 112 *                                 LIGHTING-SCHEDULE=LT1   ..
* 113 *                UNDERGROUND-WALL   AREA=12000  CONSTRUCTION=BW  ..
* 114 *                UNDERGROUND-FLOOR  AREA=20000  CONSTRUCTION=BW  ..
* 115 *
* 116 *                SET-DEFAULT FOR  EXTERIOR-WALL   HEIGHT=13.0  AZIMUTH=180  ..
* 117 *                SET-DEFAULT FOR  WINDOW   HEIGHT=6.5  Y=2.5  GLASS-TYPE=GT1
* 118 *                                 MAX-SOLAR-SCH=CLOSE-SHADE
* 119 *                                 WIN-SHADE-TYPE=MOVABLE-INTERIOR
```

```
* 120 *                                SHADING-SCHEDULE=SHADE-MULT
* 121 *                                OPEN-SHADE-SCH=OPEN-PROB
* 122 *                                SUN-CTRL-PROB=.7  ..
* 123 *
* 124 * RZ1          =SPACE             SPACE-CONDITIONS=OFFICE  VOLUME=107100
* 125 *                                AREA=11900  NUMBER-OF-PEOPLE=60
* 126 *                                AIR-CHANGES/HR=0.01  X=15  Y=15  Z=390  ..
* 127 * ROOF1       =ROOF              HEIGHT=170  WIDTH=70  AZIMUTH=180  TILT=0
* 128 *                                GND-REFLECTANCE=0  CONSTRUCTION=RF  ..
* 129 * IRZ2        =INTERIOR-WALL     NEXT-TO RZ2  AREA=1530
* 130 *                                CONSTRUCTION=SB-U ..
* 131 * IRZ3        =INTERIOR-WALL     NEXT-TO RZ3  AREA=630
* 132 *                                CONSTRUCTION=SB-U ..
* 133 * IRZ4        =INTERIOR-WALL     LIKE IRZ2  NEXT-TO RZ4 ..
* 134 * IRZ5        =INTERIOR-WALL     LIKE IRZ3  NEXT-TO RZ5 ..
* 135 *
* 136 * RZ2          =SPACE             SPACE-CONDITIONS=OFFICE   VOLUME=24975
* 137 *                                AREA=2775  NUMBER-OF-PEOPLE=28
* 138 *                                AZIMUTH=-90  X=100  Z=390  ..
* 139 * E2           =EXTERIOR-WALL     WIDTH=200  CONSTRUCTION=WL1  ..
* 140 * W2           =WINDOW            WIDTH=200  ..
* 141 * ROOF2        =ROOF              HEIGHT=15  WIDTH=185  AZIMUTH=180  TILT=0
* 142 *                                GND-REFLECTANCE=0  CONSTRUCTION=RF   ..
* 143 *
* 144 * RZ3          =SPACE             SPACE-CONDITIONS= OFFICE   VOLUME=11475
* 145 *                                AREA=1275  NUMBER-OF-PEOPLE=13
* 146 *                                AZIMUTH=180  X=100  Y=200  Z=390  ..
* 147 * E3           =EXTERIOR-WALL     WIDTH=100  CONSTRUCTION=WL1  ..
* 148 * W3           =WINDOW            WIDTH=100  ..
* 149 * ROOF3        =ROOF              HEIGHT=15  WIDTH=85  AZIMUTH=180  TILT=0
* 150 *                                GND-REFLECTANCE=0  CONSTRUCTION=RF  ..
* 151 *
* 152 * RZ4          =SPACE             LIKE  RZ2  AZIMUTH=90  X=0  Y=200  ..
* 153 *               EXTERIOR-WALL     LIKE  E2  ..
* 154 *               WINDOW            LIKE W2  ..
* 155 *               ROOF              LIKE ROOF2  ..
* 156 *
* 157 * RZ5          =SPACE             LIKE RZ3  AZIMUTH=0  X=0  Y=0  ..
* 158 *               EXTERIOR-WALL     LIKE  E3  ..
* 159 *               WINDOW            LIKE  W3  ..
* 160 *               ROOF              LIKE  ROOF3  ..
* 161 *
* 162 * TZ1          =SPACE             LIKE  RZ1    FLOOR-MULTIPLIER=30  Z=195  ..
* 163 * ITZ2         =INTERIOR-WALL     LIKE IRZ2  NEXT-TO TZ2 ..
* 164 * ITZ3         =INTERIOR-WALL     LIKE IRZ3  NEXT-TO TZ3 ..
* 165 * ITZ4         =INTERIOR-WALL     LIKE IRZ2  NEXT-TO TZ4 ..
* 166 * ITZ5         =INTERIOR-WALL     LIKE IRZ3  NEXT-TO TZ5 ..
* 167 *
* 168 * TZ2          =SPACE             LIKE  RZ2    FLOOR-MULTIPLIER=30  Z=195  ..
* 169 *               EXTERIOR-WALL     LIKE  E2  ..
* 170 *               WINDOW            LIKE  W2  ..
* 171 *
* 172 * TZ3          =SPACE             LIKE  RZ3    FLOOR-MULTIPLIER=30  Z=195  ..
* 173 *               EXTERIOR-WALL     LIKE  E3  ..
* 174 *               WINDOW            LIKE  W3  ..
* 175 *
* 176 * TZ4          =SPACE             LIKE  RZ4    FLOOR-MULTIPLIER=30  Z=195  ..
* 177 *               EXTERIOR-WALL     LIKE  E2 ..
* 178 *               WINDOW            LIKE  W2  ..
* 179 *
* 180 * TZ5          =SPACE             LIKE  RZ5    FLOOR-MULTIPLIER=30  Z=195  ..
* 181 *               EXTERIOR-WALL     LIKE  E3  ..
* 182 *               WINDOW            LIKE  W3  ..
```

```
* 183 *
* 184 * END ..
* 185 * COMPUTE LOADS ..
* 186 * INPUT SYSTEMS ..
```

°°° BUILDING °°°

FLOOR AREA	640000	SQFT	59456	SQMT
VOLUME	5980000	CUFT	169354	CUMT

	COOLING LOAD		HEATING LOAD	
TIME	JUL 9 4PM		JAN 1 7AM	
DRY-BULB TEMP	94F	34C	-1F	-18C
WET-BULB TEMP	74F	23C	-1F	-18C

	COOLING SENSIBLE (KBTU/H)	COOLING SENSIBLE (KW)	COOLING LATENT (KBTU/H)	COOLING LATENT (KW)	HEATING SENSIBLE (KBTU/H)	HEATING SENSIBLE (KW)
WALL CONDUCTION	316.266	92.666	0.000	0.000	-826.453	-242.151
ROOF CONDUCTION	40.922	11.990	0.000	0.000	-143.559	-42.063
WINDOW GLASS+FRM COND	1681.924	492.804	0.000	0.000	-4335.515	-1270.306
WINDOW GLASS SOLAR	3562.686	1043.867	0.000	0.000	290.437	85.098
DOOR CONDUCTION	0.000	0.000	0.000	0.000	0.000	0.000
INTERNAL SURFACE COND	0.000	0.000	0.000	0.000	0.000	0.000
UNDERGROUND SURF COND	-17.600	-5.157	0.000	0.000	-56.000	-16.408
OCCUPANTS TO SPACE	1014.692	297.305	780.200	228.598	0.000	0.000
LIGHT TO SPACE	2123.957	622.319	0.000	0.000	58.976	17.280
EQUIPMENT TO SPACE	1376.767	403.393	0.000	0.000	0.000	0.000
PROCESS TO SPACE	0.000	0.000	0.000	0.000	0.000	0.000
INFILTRATION	52.818	15.476	57.857	16.952	-1150.446	-337.081
TOTAL	10152.430	2974.662	838.057	245.551	-6162.560	-1805.630

TOTAL LOAD	10990.487	KBTU/H	3220.213	KW	-6162.560	KBTU/H	-1805.630	KW
TOTAL LOAD / AREA	17.17	BTU/H.SQFT	54.160	W /SQMT	9.629	BTU/H.SQFT	30.368	W /SQMT

NOTE 1)THE ABOVE LOADS EXCLUDE OUTSIDE VENTILATION AIR LOADS
2)TIMES GIVEN IN STANDARD TIME FOR THE LOCATION IN CONSIDERATION

REPORT- LS-D BUILDING MONTHLY LOADS SUMMARY WEATHER FILE- TRY CHICAGO

	COOLING						HEATING						ELEC	
MONTH	COOLING ENERGY (MBTU)	TIME OF MAX DY	TIME OF MAX HR	DRY-BULB TEMP	WET-BULB TEMP	MAXIMUM COOLING LOAD (KBTU/HR)	HEATING ENERGY (MBTU)	TIME OF MAX DY	TIME OF MAX HR	DRY-BULB TEMP	WET-BULB TEMP	MAXIMUM HEATING LOAD (KBTU/HR)	ELEC-TRICAL ENERGY (KWH)	MAXIMUM ELEC LOAD (KW)
JAN	675.86096	25	16	48.F	42.F	4729.054	-1853.456	1	7	-1.F	-1.F	-6162.559	332713.	1470.000
FEB	690.91943	25	16	27.F	22.F	5383.071	-1533.816	4	6	7.F	6.F	-5747.923	314407.	1470.000
MAR	1013.27417	3	16	79.F	62.F	7047.375	-1015.720	24	6	8.F	7.F	-5839.985	377263.	1470.000
APR	1531.55164	27	15	82.F	61.F	8987.365	-456.614	8	6	32.F	29.F	-4188.527	361261.	1470.000
MAY	1839.31677	20	15	77.F	68.F	9168.952	-222.062	9	5	40.F	38.F	-2772.635	332713.	1470.000
JUN	2483.81152	4	15	85.F	67.F	9680.896	-43.781	23	5	52.F	48.F	-1251.471	361261.	1470.000
JUL	2974.76562	9	15	94.F	74.F	10152.431	-5.772	23	5	61.F	60.F	-508.765	347563.	1470.000
AUG	2669.71899	12	15	85.F	72.F	9566.644	-12.595	5	5	55.F	54.F	-684.197	362413.	1470.000
SEP	1839.88354	10	15	82.F	70.F	8846.675	-177.489	22	6	35.F	31.F	-2652.321	346411.	1470.000
OCT	1240.67822	5	15	74.F	62.F	7701.893	-462.705	21	6	30.F	29.F	-3022.637	332713.	1470.000
NOV	848.28888	2	15	75.F	61.F	7152.317	-1158.444	15	3	26.F	25.F	-4633.186	331560.	1470.000
DEC	690.18445	10	15	41.F	35.F	4795.656	-1704.426	9	6	14.F	13.F	-4923.012	347563.	1470.000
TOTAL	18498.254						-8646.882						4147840.	
MAX						10152.431						-6162.559		1470.000

S D L P R O C E S S O R I N P U T D A T A

Wed Nov 10 14:35:12 1993SDL RUN 1

```
° 187 ° TITLE     LINE-4 °RUN 1 DUAL-DUCT VARIABLE VOLUME SYSTEM° ..
° 188 °
° 189 °                  $ HVAC SYSTEM DESCRIPTION
° 190 °
° 191 ° $ DESIGN TEMPS  COOLING 76F  HEATING 70F.
° 192 ° $ SYSTEM TYPE   A SINGLE DUAL DUCT VARIABLE VOLUME SYSTEM SERVES THE ENTIRE
° 193 ° $               BUILDING.  THE SYSTEM HAS A DRY BULB CONTROLLED ECONOMIZER WITH
° 194 ° $               A LIMIT TEMP OF 68F, INLET VANES ON BOTH SUPPLY AND RETURN FANS,
° 195 ° $               AND THE DD/VAV BOXES HAVE A MINIMUM STOP OF 30%. THE TEMPERATURE
° 196 ° $               OF THE COLD DECK SUPPLY AIR IS CONTROLLED BY THE WARMEST ZONE
° 197 ° $               AND THE HOT DECK AIR BY THE COLDEST ZONE.  MINIMUM VENTILATION
° 198 ° $               AIR IS 20 CFM/PERSON AND THE SYSTEM OPERATES FROM 7AM TO 6PM ON
° 199 ° $               WEEKDAYS AND IS OFF WEEKENDS AND HOLIDAYS.  THERE IS A LOW
° 200 ° $               LIMIT SETPOINT OF 55F TO PREVENT FREEZING. FROM MAY 1 THRU NOV 1
° 201 ° $               THE SYSTEM IS ALLOWED TO CYCLE ON TO PROVIDE NIGHT VENTILATION
° 202 ° $               FOR FREE OA COOLING BUT ONLY IF THE SPACE TEMP IS ABOVE 74F.
° 203 °
° 204 °
° 205 °          SYSTEMS-REPORT      SUMMARY=(SS-A,SS-C,SS-D,SS-J)    ..
° 206 °
° 207 °           $ SCHEDULES
° 208 °
° 209 °  HRS1         = DAY-SCHEDULE (1,7) (0)  (8,18) (1) (19,24) (0)   ..
° 210 °  HRS2         = DAY-SCHEDULE (1,24) (0)   ..
° 211 °  DAYS1        = WEEK-SCHEDULE  (MON,FRI)  HRS1   (WEH)  HRS2    ..
° 212 °  AHU-SCHED    = SCHEDULE THRU DEC 31   DAYS1   ..          $ FANS $
° 213 °
° 214 ° SUMMER-VENT   = SCHEDULE THRU MAY 1 (ALL) (1,24) (0)
° 215 °                         THRU NOV 1 (ALL) (1,24) (1)
° 216 °                         THRU DEC 31 (ALL) (1,24) (0)  ..
° 217 °
° 218 ° VENT-SETPT    = SCHEDULE THRU DEC 31 (ALL) (1,24) (74)  ..
° 219 °
° 220 ° COOLON        = SCHEDULE THRU DEC 31 (ALL) (1,24) (55)  ..
° 221 ° HEATON        = SCHEDULE THRU DEC 31 (ALL) (1,24) (60)  ..
° 222 °
° 223 °  HRSH1        = DAY-SCHEDULE (1,7) (55)  (8,18) (70)  (19,24) (55)  ..
° 224 °  HRSH2        = DAY-SCHEDULE (1,24) (55)   ..
° 225 °  DAYHEAT      = WEEK-SCHEDULE (MON,FRI)   HRSH1   (WEH)   HRSH2   ..
° 226 °  THEAT        = SCHEDULE THRU DEC 31   DAYHEAT   ..     $ HEATING $
° 227 °
° 228 °  HRSC1        = DAY-SCHEDULE  (1,7) (99)  (8,18) (76)  (19,24) (99)   ..
° 229 °  HRSC2        = DAY-SCHEDULE  (1,24) (99)   ..
° 230 °  DAYCOOL      = WEEK-SCHEDULE  (MON,FRI)  HRSC1   (WEH)  HRSC2   ..
° 231 °  TCOOL        = SCHEDULE THRU DEC 31   DAYCOOL  ..    $ COOLING $
° 232 °
° 233 °
° 234 °          $ ZONE SUB-COMMANDS
° 235 °
° 236 °  SAIR         = ZONE-AIR      OA-CFM/PER=20   ..
° 237 °
° 238 °  CONTROL      = ZONE-CONTROL  HEAT-TEMP-SCH=THEAT  COOL-TEMP-SCH=TCOOL
° 239 °                               DESIGN-HEAT-T=70  DESIGN-COOL-T=74
° 240 °                               THERMOSTAT-TYPE=REVERSE-ACTION  ..
° 241 °
```

```
* 242 *            $ ZONE DESCRIPTION
* 243 *
* 244 * RZ1       = ZONE                ZONE-TYPE=CONDITIONED  ZONE-AIR=SAIR
* 245 *                                 ZONE-CONTROL=CONTROL  CFM/SQFT=.9  ..
* 246 *
* 247 * RZ2       = ZONE  LIKE RZ1  ..
* 248 * RZ3       = ZONE  LIKE RZ1  ..
* 249 * RZ4       = ZONE  LIKE RZ1  ..
* 250 * RZ5       = ZONE  LIKE RZ1  ..
* 251 * TZ1       = ZONE  LIKE RZ1  ..
* 252 * TZ2       = ZONE  LIKE TZ1  ..
* 253 * TZ3       = ZONE  LIKE TZ1  ..
* 254 * TZ4       = ZONE  LIKE TZ1  ..
* 255 * TZ5       = ZONE  LIKE TZ1  ..
* 256 * A-STORAGE= ZONE  LIKE RZ1     AIR-CHANGES/HR=4  OA-CHANGES=0.5 ..
* 257 *
* 258 *            $ SYSTEM SUB-COMMANDS
* 259 *
* 260 *  S-CTRL  = SYSTEM-CONTROL     COOLING-SCHEDULE=COOLON
* 261 *                                HEATING-SCHEDULE=HEATON
* 262 *                                HEAT-CONTROL=COLDEST   COOL-CONTROL=WARMEST
* 263 *                                MAX-SUPPLY-T=105  MIN-SUPPLY-T=55   ..
* 264 *
* 265 *  S-FAN   = SYSTEM-FANS        FAN-SCHEDULE=AHU-SCHED  FAN-CONTROL=INLET
* 266 *                                SUPPLY-STATIC=5.5  SUPPLY-EFF=0.55
* 267 *                                RETURN-STATIC=2.0  RETURN-EFF=0.55
* 268 *                                NIGHT-VENT-CTRL=SCHEDULED+DEMAND
* 269 *                                NIGHT-VENT-SCH=SUMMER-VENT
* 270 *                                NIGHT-VENT-RATIOS=(1,1,1,0,0,0)
* 271 *                                NIGHT-CYCLE-CTRL=CYCLE-ON-FIRST   ..
* 272 *
* 273 *  S-TERM  = SYSTEM-TERMINAL    MIN-CFM-RATIO=0.3 ..
* 274 *
* 275 *           $ SYSTEMS DESCRIPTION
* 276 *
* 277 * DUAL-DUCT  = SYSTEM          SYSTEM-TYPE=DDS    SYSTEM-CONTROL=S-CTRL
* 278 *                               SYSTEM-FANS=S-FAN  VENT-TEMP-SCH=VENT-SETPT
* 279 *                               SYSTEM-TERMINAL=S-TERM  RETURN-AIR-PATH=DUCT
* 280 *                               ECONO-LIMIT-T=68   ZONE-NAMES=(RZ1,RZ2,RZ3,
* 281 *                                 RZ4,RZ5,TZ1,TZ2,TZ3,TZ4,TZ5,A-STORAGE)
* 282 *                               SUPPLY-CFM=750000  ..
* 283 *
* 284 * PLANT1  = PLANT-ASSIGNMENT  SYSTEM-NAMES = (DUAL-DUCT)
* 285 *                             INT-ELEC-KW = 100  $ FOR ELEVATORS
* 286 *                             INT-ELEC-SCH = OCCUP
* 287 *                             DHW-SIZE=0
* 288 *                             DHW-GAL/MIN  = 2.22
* 289 *                             DHW-SCH      = OCCUP  ..
* 290 *
* 291 * OC1           =DAY-SCHEDULE        (1,8) (0.)          (9,10) (1.)
* 292 *                                    (11,13) (.8,.4,.8)  (14,24) (1.,1.,1.,
* 293 *                                                  .3,.1,.1,.1,0.,0.,0.,0.)  ..
* 294 * OC2           =DAY-SCHEDULE        (1,24) (0.0)  ..
* 295 * PEOPLE        =WEEK-SCHEDULE       (MON,FRI)  OC1      (WEH)  OC2  ..
* 296 * OCCUP         =SCHEDULE            THRU DEC 31  PEOPLE   ..
* 297 *
* 298 *
* 299 * END   ..
* 300 * COMPUTE SYSTEMS   ..
* 301 *
* 302 * INPUT PLANT  ..
```

```
* 303 *
* 304 * PLANT1 = PLANT-ASSIGNMENT  ..
* 305 *
* 306 *                    $ PLANT DESCRIPTION
* 307 *
* 308 * $ SCREW TYPE CHILLERS ARE ALLOWED TO RUN ONLY IF OA TEMPERATURE IS ABOVE 60F.
* 309 * $ THE GAS BOILER IS ALLOWED TO RUN ONLY IF OA TEMPERATURE IS BELOW 60F.
* 310 * $ THESE LIMITS ARE PLACED IN SYSTEMS INPUT VIA COOLING AND HEATING SCHEDULES.
* 311 * $ ALL PIECES OF EQUIPMENT ARE ALLOWED TO SIZE AUTOMATICALLY.
* 312 * $ THE CHILLED WATER PUMPS ARE VARIABLE SPEED WHEREAS THE HEATING PUMPS
* 313 * $ ARE CONSTANT SPEED (FLOW). CURVE-FIT COMMANDS ARE USED TO REPLACE THE STANDARD
* 314 * $ HERMETIC CENTRIFUGAL CHILLER DEFAULT CURVES AND THUS SIMULATE A SCREW TYPE
* 315 * $ CHILLER WITH MULTIPLE COMPRESSORS.
* 316 *
* 317 *          PLANT-REPORT        SUMMARY=(PS-A,BEPS)  ..
* 318 *
* 319 * SBOIL     =PLANT-EQUIPMENT    TYPE=HW-BOILER  SIZE=-999   INSTALLED-NUMBER=2  ..
* 320 * DHWH      =PLANT-EQUIPMENT    TYPE=DHW-HEATER  SIZE -999  INSTALLED-NUMBER=2  ..
* 321 *
* 322 *       PLANT-PARAMETERS       HCIRC-PUMP-TYPE=FIXED-SPEED
* 323 *                              CCIRC-PUMP-TYPE=VARIABLE-SPEED  ..
* 324 *
* 325 * CMPC      =PLANT-EQUIPMENT    TYPE=HERM-CENT-CHLR  SIZE=-999
* 326 *                              INSTALLED-NUMBER=2  ..
* 327 *
* 328 *
* 329 * CTOWER    =PLANT-EQUIPMENT    TYPE=COOLING-TWR  SIZE=-999 ..
* 330 *
* 331 * PART-LOAD-RATIO  TYPE=HERM-CENT-CHLR
* 332 *      MIN-RATIO=0.1  MAX-RATIO=1.05  OPERATING-RATIO=0.4  E-I-R=.23  ..
* 333 *
* 334 * DIAGNOSTIC COMMENTS  ..
* 335 *
* 336 * BLR-HIR-FPLR  CURVE-FIT  TYPE LINEAR
* 337 *      DATA (1.,1.)  (.1,.109)  ..

          COEFFICIENT( 1) =     0.01000000
          COEFFICIENT( 2) =     0.99000001
          COEFFICIENT( 3) =     0.00000000
          COEFFICIENT( 4) =     0.00000000
          COEFFICIENT( 5) =     0.00000000
          COEFFICIENT( 6) =     0.00000000

             INPUT        CALL
 INDEPENDENT  DEPENDENT    DEPENDENT   DIFFERENCE     PRINT DIFF

     1.000       1.000
     0.100       0.109       0.109        0.000        0.000

ROOT MEAN SQUARE DIFFERENCE =     0.000
* 338 * SCREW-EIR-FPLR  CURVE-FIT  TYPE QUADRATIC
* 339 *      DATA (1.0,1.0) (.8,.7) (.6,.45) (.4,.25) (.2,.13)  ..

          COEFFICIENT( 1) =     0.05225713
          COEFFICIENT( 2) =     0.22597121
```

```
COEFFICIENT( 3) =     0.72177273
COEFFICIENT( 4) =     0.00000000
COEFFICIENT( 5) =     0.00000000
COEFFICIENT( 6) =     0.00000000
```

INDEPENDENT	INPUT DEPENDENT	CALL DEPENDENT	DIFFERENCE	PRINT DIFF
1.000	1.000			
0.800	0.700	0.695	0.005	0.719
0.600	0.450	0.448	0.002	0.516
0.400	0.250	0.258	-0.008	3.252
0.200	0.130	0.126	0.004	2.829

```
ROOT MEAN SQUARE DIFFERENCE =     0.006
    * 340 * SCREW-CAP-FT  CURVE-FIT  TYPE BI-QUADRATIC
    * 341 *      DATA (44,85,1.0) (40,75,.97) (40,85,.94) (40,95,.90) (44,75,1.03)
    * 342 *           (44,95,.96) (50,75,1.13) (50,85,1.1) (50,95,1.06)  ..

COEFFICIENT( 1) =     0.57026076
COEFFICIENT( 2) =     0.00093736
COEFFICIENT( 3) =     0.00016746
COEFFICIENT( 4) =     0.00501750
COEFFICIENT( 5) =    -0.00005008
COEFFICIENT( 6) =    -0.00000011
```

INDEPENDENT	INDEPENDENT	INPUT DEPENDENT	CALC DEPENDENT	DIFFERENCE	PRCNT DIFF
44.000	85.000	1.000			
40.000	75.000	0.970	0.970	0.000	0.003
40.000	85.000	0.940	0.940	0.000	0.003
40.000	95.000	0.900	0.900	0.000	0.005
44.000	75.000	1.030	1.030	0.000	0.005
44.000	95.000	0.960	0.960	0.000	0.007
50.000	75.000	1.130	1.130	0.000	0.002
50.000	85.000	1.100	1.100	0.000	0.003
50.000	95.000	1.060	1.060	0.000	0.006

```
ROOT MEAN SQUARE DIFFERENCE =     0.000
    * 343 * SCREW-EIR-FT  CURVE-FIT  TYPE BI-QUADRATIC
    * 344 *      DATA (44,85,1.0) (40,75,.88) (40,85,1.06) (40,95,1.26) (44,75,.84)
    * 345 *           (44,95,1.18) (50,75,.79) (50,85,.93) (50,95,1.09)  ..

COEFFICIENT( 1) =     0.03537060
COEFFICIENT( 2) =    -0.00968459
COEFFICIENT( 3) =     0.00033442
COEFFICIENT( 4) =     0.01752476
COEFFICIENT( 5) =     0.00010020
COEFFICIENT( 6) =    -0.00039319
```

INDEPENDENT	INDEPENDENT	INPUT DEPENDENT	CALC DEPENDENT	DIFFERENCE	PRCNT DIFF
44.000	85.000	1.000			
40.000	75.000	0.880	0.882	-0.002	0.173
40.000	85.000	1.060	1.060	0.000	0.017
40.000	95.000	1.260	1.258	0.002	0.146
44.000	75.000	0.840	0.837	0.003	0.334
44.000	95.000	1.180	1.182	-0.002	0.202
50.000	75.000	0.790	0.791	-0.001	0.097
50.000	85.000	0.930	0.930	0.000	0.027
50.000	95.000	1.090	1.089	0.001	0.113

```
ROOT MEAN SQUARE DIFFERENCE =     0.002
    * 346 *
    * 347 * DIAGNOSTIC WARNINGS  ..
    * 348 *
    * 349 * EQUIPMENT-QUAD
    * 350 *      HW-BOILER-HIR-FPLR BLR-HIR-FPLR
    * 351 *      HERM-CENT-EIR-FPLR SCREW-EIR-FPLR
    * 352 *      HERM-CENT-CAP-FT   SCREW-CAP-FT
    * 353 *      HERM-CENT-EIR-FT   SCREW-EIR-FT    ..
    * 354 *
    * 355 * END  ..
    * 356 * COMPUTE PLANT  ..
    * 357 * INPUT ECONOMICS  ..
```

```
* 358 * ECONOMICS-REPORT  S (ES-D,ES-E,ES-F)  ..
* 359 *
* 360 *                        $ ENERGY COST DESCRIPTION
* 361 *
* 362 * $ THE INPUT FOR UTILITY RATES IS THE SIMPLEST POSSIBLE. USING UNIFORM RATES
* 363 * $ FOR BOTH GAS AND ELECTRICITY.  THERE IS A FIXED MONTHLY CHARGE AND A RATE
* 364 * $ LIMITATION ON ELECTRICITY OF 7 CENTS/KWH.  THE DEMAND CHARGE IS A NOMINAL
* 365 * $ FLAT RATE OF 5 DOLLARS/KW YEAR-AROUND.
* 366 *
* 367 * ELEC-RATE = UTILITY-RATE  RESOURCE=ELECTRICITY
* 368 *                           MONTH-CHGS = (2000)
* 369 *                           ENERGY-CHG = .055
* 370 *                           DEMAND-CHGS = (5)
* 371 *                           RATE-LIMITATION = .07  ..
* 372 *
* 373 * GAS-RATE  = UTILITY-RATE  RESOURCE=NATURAL-GAS
* 374 *                           ENERGY-CHG =.70  ..  $ DOLLARS/THERM
* 375 * END  ..
* 376 * COMPUTE ECONOMICS  ..
* 377 *
* 378 * INPUT SYSTEMS  ..
```

SYSTEM NAME	SYSTEM TYPE	ALTITUDE MULTIPLIER	FLOOR AREA (SQFT)	MAX PEOPLE
DUAL-DUCT	DDS	1.020	640000.0	4402.

SUPPLY FAN (CFM)	ELEC (KW)	DELTA-T (F)	RETURN FAN (CFM)	ELEC (KW)	DELTA-T (F)	OUTSIDE AIR RATIO	COOLING CAPACITY (KBTU/HR)	SENSIBLE (SHR)	HEATING CAPACITY (KBTU/HR)	COOLING EIR (BTU/BTU)	HEATING EIR (BTU/BTU)
765000.	880.282	3.6	765000.	320.102	1.3	0.122	24975.178	0.745	-38507.746	0.00	0.37

ZONE NAME	SUPPLY FLOW (CFM)	EXHAUST FLOW (CFM)	FAN (KW)	MINIMUM FLOW RATIO	OUTSIDE AIR FLOW (CFM)	COOLING CAPACITY (KBTU/HR)	SENSIBLE (SHR)	EXTRACTION RATE (KBTU/HR)	HEATING CAPACITY (KBTU/HR)	ADDITION RATE (KBTU/HR)	MULTIPLIER
RZ1	9964.	0.	0.000	0.300	1224.	0.00	0.00	204.47	0.00	-376.66	1.0
RZ2	4917.	0.	0.000	0.300	571.	0.00	0.00	100.91	0.00	-185.88	1.0
RZ3	1525.	0.	0.000	0.300	265.	0.00	0.00	31.29	0.00	-57.64	1.0
RZ4	4878.	0.	0.000	0.300	571.	0.00	0.00	100.09	0.00	-184.38	1.0
RZ5	2130.	0.	0.000	0.300	265.	0.00	0.00	43.72	0.00	-80.53	1.0
TZ1	9964.	0.	0.000	0.300	1224.	0.00	0.00	204.47	0.00	-376.66	30.0
TZ2	4942.	0.	0.000	0.300	571.	0.00	0.00	101.41	0.00	-186.81	30.0
TZ3	1484.	0.	0.000	0.300	265.	0.00	0.00	30.46	0.00	-56.11	30.0
TZ4	5276.	0.	0.000	0.300	571.	0.00	0.00	108.27	0.00	-199.45	30.0
TZ5	2225.	0.	0.000	0.300	265.	0.00	0.00	45.66	0.00	-84.11	30.0
A-STORAGE	24810.	0.	0.000	0.300	3400.	0.00	0.00	509.11	0.00	-937.83	1.0

	COOLING						HEATING						ELEC	
MONTH	COOLING ENERGY (MBTU)	TIME OF MAX DY	TIME OF MAX HR	DRY-BULB TEMP	WET-BULB TEMP	MAXIMUM COOLING LOAD (KBTU/HR)	HEATING ENERGY (MBTU)	TIME OF MAX DY	TIME OF MAX HR	DRY-BULB TEMP	WET-BULB TEMP	MAXIMUM HEATING LOAD (KBTU/HR)	ELEC-TRICAL ENERGY (KWH)	MAXIMUM ELEC LOAD (KW)
JAN	0.00000					0.000	-1360.075	4	8	2.F	2.F	-32294.734	487696.	2017.333
FEB	0.00000					0.000	-902.488	8	8	7.F	6.F	-27977.312	447234.	2015.254
MAR	96.10119	3	15	76.F	65.F	9312.090	-293.062	24	8	6.F	5.F	-11400.101	522411.	2022.900
APR	676.91876	28	15	78.F	68.F	13260.128	-50.972	8	8	31.F	28.F	-4102.924	504773.	2091.482
MAY	558.87231	21	14	85.F	75.F	14771.589	-38.075	6	23	39.F	32.F	-5109.092	592791.	2071.204
JUN	1592.44739	21	16	82.F	72.F	15581.333	-4.944	1	8	50.F	49.F	-749.133	701938.	2119.384
JUL	2780.08643	19	16	90.F	75.F	19637.363	0.000					0.000	748423.	2302.989
AUG	2318.93164	16	16	86.F	73.F	16268.928	-0.261	4	8	58.F	56.F	-82.480	778051.	2141.416
SEP	830.72363	10	16	82.F	70.F	13722.426	-36.284	23	8	36.F	34.F	-2885.901	635695.	2084.419
OCT	305.18964	5	16	74.F	62.F	8111.271	-92.795	18	8	43.F	41.F	-6469.029	527490.	2105.047
NOV	135.12518	2	16	77.F	62.F	7739.572	-368.909	15	8	27.F	26.F	-19181.605	469326.	2028.545
DEC	0.00000					0.000	-854.511	27	8	31.F	30.F	-24501.088	497948.	2013.748
TOTAL	9294.387						-4002.373						6913781.	
MAX						19637.363						-32294.734		2302.989

MAXIMUM DAILY INTEGRATED COOLING LOAD (DES DAY) 0.000 (KBTU)
MAXIMUM DAILY INTEGRATED COOLING LOAD (WTH FILE) 201088.800 (KBTU)

31-STORY OFFICE BLDG, CHICAGO - LOAD1 STD ASHRAE WEIGHTING FACTORS DOE-2.1E-001 Wed Nov 10 14:35:12 1993SDL RUN 1
RUN 1 DUAL-DUCT VARIABLE VOLUME SYSTEM
REPORT- SS-A SYSTEM MONTHLY LOADS SUMMARY FOR DUAL-DUCT WEATHER FILE- TRY CHICAGO

	COOLING						HEATING						ELEC	
MONTH	COOLING ENERGY (MBTU)	TIME OF MAX DY	TIME OF MAX HR	DRY-BULB TEMP	WET-BULB TEMP	MAXIMUM COOLING LOAD (KBTU/HR)	HEATING ENERGY (MBTU)	TIME OF MAX DY	TIME OF MAX HR	DRY-BULB TEMP	WET-BULB TEMP	MAXIMUM HEATING LOAD (KBTU/HR)	ELEC-TRICAL ENERGY (KWH)	MAXIMUM ELEC LOAD (KW)
JAN	0.00000					0.000	-1360.075	4	8	2.F	2.F	-32294.734	472496.	1977.333
FEB	0.00000					0.000	-902.488	8	8	7.F	6.F	-27977.312	432794.	1975.254
MAR	96.10119	3	15	76.F	65.F	9312.090	-293.062	24	8	6.F	5.F	-11400.101	504931.	1982.900
APR	676.91876	28	15	78.F	68.F	13260.128	-50.972	8	8	31.F	28.F	-4102.924	488053.	2051.482
MAY	558.87231	21	14	85.F	75.F	14771.589	-38.075	6	23	39.F	32.F	-5109.092	577591.	2031.203
JUN	1592.44739	21	16	82.F	72.F	15581.333	-4.944	1	8	50.F	49.F	-749.133	685218.	2079.384
JUL	2780.08643	19	16	90.F	75.F	19637.363	0.000					0.000	732462.	2262.989
AUG	2318.93164	16	16	86.F	73.F	16268.928	-0.261	4	8	58.F	56.F	-82.480	761331.	2101.416
SEP	830.72363	10	16	82.F	70.F	13722.426	-36.284	23	8	36.F	34.F	-2885.901	619735.	2044.419
OCT	305.18964	5	16	74.F	62.F	8111.271	-92.795	18	8	43.F	41.F	-6469.029	512290.	2065.047
NOV	135.12518	2	16	77.F	62.F	7739.572	-368.909	15	8	27.F	26.F	-19181.605	454126.	1988.545
DEC	0.00000					0.000	-854.511	27	8	31.F	30.F	-24501.088	481988.	1973.748
TOTAL	9294.387						-4002.373						6723011.	
MAX						19637.363						-32294.734		2262.989

	NUMBER OF HOURS										--COINCIDENT LOADS--	
MONTH	HOURS COOLING LOAD	HOURS HEATING LOAD	HOURS COINCIDENT COOL-HEAT LOAD	HOURS FLOATING	HOURS HEATING AVAIL.	HOURS COOLING AVAIL.	HOURS FANS ON	HOURS FANS CYCLE ON	HOURS NIGHT VENTING	HOURS FLOATING WHEN FANS ON	HEATING LOAD AT COOLING PEAK (KBTU/HR)	ELECTRIC LOAD AT COOLING PEAK (KW)
JAN	0	277	0	467	744	0	277	57	0	0	0.000	48.000
FEB	0	235	0	437	672	1	235	26	0	0	0.000	48.000
MAR	21	236	5	492	711	47	253	0	0	1	0.000	1835.089
APR	112	154	24	478	504	290	242	0	0	0	0.000	1913.863
MAY	247	138	45	404	452	394	370	0	150	30	0.000	1857.121
JUN	423	37	22	282	147	653	463	0	221	25	0.000	1985.587
JUL	471	0	0	273	2	744	510	0	279	39	0.000	2131.033
AUG	481	8	3	258	30	742	542	0	300	56	0.000	1998.371
SEP	295	100	34	359	314	506	406	0	175	45	0.000	1938.555
OCT	136	160	20	468	494	326	297	0	77	21	0.000	1853.431
NOV	38	212	13	483	676	68	237	10	7	0	0.000	1846.406
DEC	0	267	0	477	744	0	267	36	0	0	0.000	48.000
ANNUAL	2224	1824	166	4878	5490	3771	4099	129	1209	217		

	-----COOLING-----				---HEATING---			DAY COOLING PEAK			
	JUL 19				JAN 4			JUL 19			
HOUR	HOURLY COOLING LOAD (KBTU)	SENSIBLE HEAT RATIO	DRY-BULB TEMP	WET-BULB TEMP	HOURLY HEATING LOAD (KBTU)	DRY-BULB TEMP	WET-BULB TEMP	HOURLY COOLING LOAD (KBTU)	SENSIBLE HEAT RATIO	DRY-BULB TEMP	WET-BULB TEMP
1	0.000	0.000	79.F	72.F	0.000	6.F	6.F	0.000	0.000	79.F	72.F
2	0.000	0.000	79.F	72.F	-9638.244	5.F	5.F	0.000	0.000	79.F	72.F
3	0.000	0.000	78.F	72.F	0.000	4.F	4.F	0.000	0.000	78.F	72.F
4	0.000	0.000	78.F	72.F	-9782.389	4.F	4.F	0.000	0.000	78.F	72.F
5	0.025	0.712	77.F	72.F	0.000	3.F	3.F	0.025	0.712	77.F	72.F
6	0.000	0.000	78.F	72.F	-10077.901	3.F	3.F	0.000	0.000	78.F	72.F
7	18286.602	0.884	77.F	72.F	0.000	2.F	2.F	18286.602	0.884	77.F	72.F
8	18453.250	0.829	79.F	72.F	-32294.734	2.F	2.F	18453.250	0.829	79.F	72.F
9	17884.889	0.845	82.F	72.F	-18999.021	4.F	3.F	17884.889	0.845	82.F	72.F
10	18224.994	0.851	85.F	73.F	-15659.052	7.F	6.F	18224.994	0.851	85.F	73.F
11	18715.545	0.864	88.F	74.F	-13227.115	11.F	9.F	18715.545	0.864	88.F	74.F
12	18165.553	0.855	89.F	74.F	-11438.996	16.F	13.F	18165.553	0.855	89.F	74.F
13	18929.281	0.837	90.F	75.F	-9487.539	18.F	15.F	18929.281	0.837	90.F	75.F
14	19152.379	0.833	89.F	75.F	-7530.267	20.F	16.F	19152.379	0.833	89.F	75.F
15	19637.363	0.840	90.F	75.F	-6679.233	20.F	16.F	19637.363	0.840	90.F	75.F
16	17473.195	0.841	91.F	76.F	-5753.929	20.F	16.F	17473.195	0.841	91.F	76.F
17	16165.688	0.849	90.F	75.F	-6808.142	19.F	15.F	16165.688	0.849	90.F	75.F
18	0.000	0.000	86.F	74.F	-7249.688	16.F	13.F	0.000	0.000	86.F	74.F
19	0.000	0.000	86.F	74.F	0.000	13.F	11.F	0.000	0.000	86.F	74.F
20	0.000	0.000	80.F	72.F	0.000	11.F	9.F	0.000	0.000	80.F	72.F
21	0.000	0.000	79.F	72.F	0.000	10.F	8.F	0.000	0.000	79.F	72.F
22	0.025	0.712	77.F	71.F	0.000	11.F	9.F	0.025	0.712	77.F	71.F
23	0.000	0.000	76.F	71.F	0.000	7.F	6.F	0.000	0.000	76.F	71.F
24	0.012	0.446	74.F	70.F	0.000	6.F	5.F	0.012	0.446	74.F	70.F
SUM	--------				--------			---------			
								201088.812			
MAX	19637.363				-32294.734						

SYSTEM-TYPE	DDS	SQFT/TON	391.1
COOLING PEAK	30.68 (BTU/HR- SQFT)	HEATING PEAK	-50.46 (BTU/HR- SQFT)
SUPPLY AIR PEAK FLOW	1.20 (CFM/SQFT)	MIN-OA/PERSON	21.17 (CFM)
OA FRAC AT CLG PEAK	0.158	OA FRAC AT HTG PEAK	0.251

* ASTERISKS INDICATE HOURS LOADS NOT MET

EQUIPMENT	SIZE (MBTU/H)	NUMBER INSTD	NUMBER AVAIL	SIZE (MBTU/H)	NUMBER INSTD	NUMBER AVAIL	SIZE (MBTU/H)	NUMBER INSTD	NUMBER AVAIL	SIZE (MBTU/H)	NUMBER INSTD	NUMBER AVAIL	SIZE (MBTU/H)	NUMBER INSTD	NUMBER AVAIL	SIZE (MBTU/H)	NUMBER INSTD	NUMBER AVAIL
HW-BOILER	16.255	2	2															
DHW-HEATER	0.057	2	2															
HERM-CENT-CHLR	10.015	2	2															
COOLING-TWR	12.444	2	2															

31-STORY OFFICE BLDG, CHICAGO - LOAD1 STD ASHRAE WEIGHTING FACTORS DOE-2.1E-001 Wed Nov 10 14:35:12 1993PDL RUN 1
RUN 1 DUAL-DUCT VARIABLE VOLUME SYSTEM
REPORT- PS-A PLANT ENERGY UTILIZATION SUMMARY WEATHER FILE- TRY CHICAGO

	SITE ENERGY												SOURCE
	2	3	4	5	6	7	8	9	10	11	12	13	14
MONTH	TOTAL HEAT LOAD (MBTU)	TOTAL COOLING LOAD (MBTU)	TOTAL ELECTR LOAD (MWH)	RCVRED ENERGY (MBTU)	WASTED RCVRABL ENERGY (MBTU)	FUEL INPUT COOLING (MBTU)	ELEC INPUT COOLING (MWH)	FUEL INPUT HEATING (MBTU)	ELEC INPUT HEATING (MWH)	FUEL INPUT ELECT (MBTU)	TOTAL FUEL INPUT (MBTU)	TOTAL SITE ENERGY (MBTU)	TOTAL SOURCE ENERGY (MBTU)
JAN	1436.6	0.0	519.5	0.0	0.0	0.0	0.0	1825.1	31.8	0.0	1825.1	3598.0	7144.3
FEB	969.6	0.0	473.2	0.0	0.0	0.0	0.0	1238.5	25.9	0.0	1238.5	2853.4	6083.8
MAR	363.5	99.1	544.2	0.0	0.0	0.0	6.1	469.3	15.8	0.0	469.3	2326.8	6042.3
APR	101.9	694.9	553.1	0.0	0.0	0.0	40.8	135.0	7.6	0.0	135.0	2022.8	5798.8
MAY	82.8	589.0	645.2	0.0	0.0	0.0	45.9	110.2	6.5	0.0	110.2	2312.3	6717.3
JUN	28.1	1651.0	816.1	0.0	0.0	0.0	112.6	39.8	1.6	0.0	39.8	2825.3	8397.1
JUL	13.5	2861.1	945.6	0.0	0.0	0.0	197.2	20.9	0.0	0.0	20.9	3248.2	9703.7
AUG	15.7	2392.6	940.2	0.0	0.0	0.0	161.8	23.8	0.3	0.0	23.8	3232.6	9651.0
SEP	71.3	868.3	704.0	0.0	0.0	0.0	63.3	95.2	5.0	0.0	95.2	2497.9	7304.0
OCT	140.9	321.6	560.8	0.0	0.0	0.0	24.5	184.8	8.8	0.0	184.8	2098.8	5927.5
NOV	429.4	140.2	494.2	0.0	0.0	0.0	9.2	551.7	15.7	0.0	551.7	2238.5	5612.7
DEC	928.8	0.0	525.3	0.0	0.0	0.0	0.0	1188.9	27.3	0.0	1188.9	2981.7	6567.8
TOTAL	4582.0	9617.9	7721.4	0.0	0.0	0.0	661.3	5883.2	146.4	0.0	5883.3	32236.3	84950.3

	SITE ENERGY												SOURCE
	2	3	4	5	6	7	8	9	10	11	12	13	14
MONTH	TOTAL HEAT LOAD (MBTU)	TOTAL COOLING LOAD (MBTU)	TOTAL ELECTR LOAD (MWH)	RCVRED ENERGY (MBTU)	WASTED RCVRABL ENERGY (MBTU)	FUEL INPUT COOLING (MBTU)	ELEC INPUT COOLING (MWH)	FUEL INPUT HEATING (MBTU)	ELEC INPUT HEATING (MWH)	FUEL INPUT ELECT (MBTU)	TOTAL FUEL INPUT (MBTU)	TOTAL SITE ENERGY (MBTU)	TOTAL SOURCE ENERGY (MBTU)
JAN	1436.6	0.0	519.5	0.0	0.0	0.0	0.0	1825.1	31.8	0.0	1825.1	3598.0	7144.3
FEB	969.6	0.0	473.2	0.0	0.0	0.0	0.0	1238.5	25.9	0.0	1238.5	2853.4	6083.8
MAR	363.5	99.1	544.2	0.0	0.0	0.0	6.1	469.3	15.8	0.0	469.3	2326.8	6042.3
APR	101.9	694.9	553.1	0.0	0.0	0.0	40.8	135.0	7.6	0.0	135.0	2022.8	5798.8
MAY	82.8	589.0	645.2	0.0	0.0	0.0	45.9	110.2	6.5	0.0	110.2	2312.3	6717.3
JUN	28.1	1651.0	816.1	0.0	0.0	0.0	112.6	39.8	1.6	0.0	39.8	2825.3	8397.1
JUL	13.5	2861.1	945.6	0.0	0.0	0.0	197.2	20.9	0.0	0.0	20.9	3248.2	9703.7
AUG	15.7	2392.6	940.2	0.0	0.0	0.0	161.8	23.8	0.3	0.0	23.8	3232.6	9651.0
SEP	71.3	868.3	704.0	0.0	0.0	0.0	63.3	95.2	5.0	0.0	95.2	2497.9	7304.0
OCT	140.9	321.6	560.8	0.0	0.0	0.0	24.5	184.8	8.8	0.0	184.8	2098.8	5927.5
NOV	429.4	140.2	494.2	0.0	0.0	0.0	9.2	551.7	15.7	0.0	551.7	2238.5	5612.7
DEC	928.8	0.0	525.3	0.0	0.0	0.0	0.0	1188.9	27.3	0.0	1188.9	2981.7	6567.8
TOTAL	4582.0	9617.9	7721.4	0.0	0.0	0.0	661.3	5883.2	146.4	0.0	5883.3	32236.3	84950.3

HEATING LOADS	MBTU SUPPLIED	PCT OF TOTAL LOAD
HW-BOILER	4394.8	95.9
DHW-HEATER	187.2	4.1
LOAD SATISFIED	4582.0	100.0
TOTAL LOAD ON PLANT	4582.1	

COOLING LOADS	MBTU SUPPLIED	PCT OF TOTAL LOAD
HERM-CENT-CHLR	9617.8	100.0
LOAD SATISFIED	9617.8	100.0
TOTAL LOAD ON PLANT	9617.8	

ELECTRICAL LOADS	KWH SUPPLIED	PCT OF TOTAL LOAD
ELECTRICITY	7721433.0	100.0
LOAD SATISFIED	7721433.0	100.0
TOTAL LOAD ON PLANT	7721451.0	

TOWER ABOVE DESIGN TEMPERATURE OF 85.F 0 HOURS

SUMMARY OF LOADS MET

TYPE OF LOAD	TOTAL LOAD (MBTU)	LOAD SATISFIED (MBTU)	TOTAL OVERLOAD (MBTU)	PEAK OVERLOAD (MBTU)	HOURS OVERLOADED
HEATING LOADS	4582.1	4582.0	0.000	0.000	0
COOLING LOADS	9617.8	9617.8	0.000	0.000	0
ELECTRICAL LOADS	26353.1	26353.0	0.000	0.000	0

ENERGY TYPE: UNITS: MBTU	ELECTRICITY	NATURAL-GAS
CATEGORY OF USE		
AREA LIGHTS	10810.3	0.0
MISC EQUIPMT	3997.2	0.0
SPACE HEAT	281.1	5598.3
SPACE COOL	1461.7	0.0
HEAT REJECT	539.1	0.0
PUMPS & MISC	474.6	0.0
VENT FANS	8789.0	0.0
DOMHOT WATER	0.0	284.9
TOTAL	26353.0	5883.2

TOTAL SITE ENERGY	32236.27 MBTU	50.4 KBTU/SQFT-YR GROSS-AREA	50.4 KBTU/SQFT-YR NET-AREA
TOTAL SOURCE ENERGY	84950.23 MBTU	132.7 KBTU/SQFT-YR GROSS-AREA	132.7 KBTU/SQFT-YR NET-AREA

PERCENT OF HOURS ANY SYSTEM ZONE OUTSIDE OF THROTTLING RANGE = 0.0
PERCENT OF HOURS ANY PLANT LOAD NOT SATISFIED = 0.0

NOTE: ENERGY IS APPORTIONED HOURLY TO ALL END-USE CATEGORIES.

31-STORY OFFICE BLDG, CHICAGO - LOAD1 STD ASHRAE WEIGHTING FACTORS DOE-2.1E-001 Wed Nov 10 14:35:12 1993EDL RUN 1.
RUN 1 DUAL-DUCT VARIABLE VOLUME SYSTEM

REPORT- ES-D ENERGY COST SUMMARY

UTILITY-RATE	RESOURCE	METERS	METERED ENERGY UNITS/YR	TOTAL CHARGE ($)	VIRTUAL RATE ($/UNIT)	RATE USED ALL YEAR?
ELEC-RATE	ELECTRICITY	1 2 3 4 5	7721433. KWH	564500.	0.0731	YES
GAS-RATE	NATURAL-GAS	1 2 3 4 5	58833. THERM	41183.	0.7000	YES
				==========		
				605683.		

ENERGY COST/GROSS BLDG AREA: 0.95
ENERGY COST/NET BLDG AREA: 0.95

REPORT- ES-E SUMMARY OF UTILITY-RATE: ELEC-RATE

UTILITY-RATE: ELEC-RATE

RESOURCE: ELECTRICITY
METERS: 1 2 3 4 5
POWER-FACTOR: 0.80

DEMAND-WINDOW: HOUR
BILLING-DAY: 31
EXCESS-KVAR-FRAC: 0.30

3413. BTU/KWH
RATE-LIMITATION: 0.0700
EXCESS-KVAR-CHG: 0.0000

RATE-QUALIFICATIONS

MIN-ENERGY: 0.0
MAX-ENERGY: 0.0
MIN-DEMAND: 0.0
MAX-DEMAND: 0.0
QUALIFY-RATE: ALL-MONTHS
USE-MIN-QUAL: NO

BLOCK-CHARGES

DEMAND-RATCHETS

MIN-MON-RATCHETS

MONTH	METERED ENERGY KWH	BILLING ENERGY KWH	METERED DEMAND KW	BILLING DEMAND KW	ENERGY CHARGE ($)	DEMAND CHARGE ($)	ENERGY CST ADJ ($)	TAXES ($)	SURCHRG ($)	FIXED. CHARGE ($)	MINIMUM CHARGE ($)	VIRTUAL RATE ($/UNIT)	TOTAL CHARGE ($)
JAN	519453	519453	2157.2	2157.2	28570	10786	0	0	0	2000	0	0.0739	38362
FEB	473171	473171	2154.7	2154.7	26024	10774	0	0	0	2000	0	0.0742	35122
MAR	544248	544248	2492.4	2492.4	29934	12462	0	0	0	2000	0	0.0737	40097
APR	553110	553110	2828.4	2828.4	30421	14142	0	0	0	2000	0	0.0736	40718
MAY	645226	645226	2944.6	2944.6	35487	14723	0	0	0	2000	0	0.0731	47166
JUN	816149	816149	3119.7	3119.7	44888	15599	0	0	0	2000	0	0.0725	59130
JUL	945592	945592	3700.9	3700.9	52008	18504	0	0	0	2000	0	0.0721	68191
AUG	940158	940158	3204.0	3204.0	51709	16020	0	0	0	2000	0	0.0721	67811
SEP	703986	703986	2901.8	2901.8	38719	14509	0	0	0	2000	0	0.0728	51279
OCT	560817	560817	2418.5	2418.5	30845	12093	0	0	0	2000	0	0.0736	41257
NOV	494236	494236	2404.2	2404.2	27183	12021	0	0	0	2000	0	0.0740	36596
DEC	525288	525288	2153.6	2153.6	28891	10768	0	0	0	2000	0	0.0738	38770
TOTAL	7721433	7721433	3700.9		424679	162400	0	0	0	24000		0.0731	564500

REPORT- ES-E SUMMARY OF UTILITY-RATE: GAS-RATE

UTILITY-RATE: GAS-RATE

RESOURCE: NATURAL-GAS
METERS: 1 2 3 4 5

DEMAND-WINDOW: HOUR
BILLING-DAY: 31

100000. BTU/THERM
RATE-LIMITATION: 0.0000

RATE-QUALIFICATIONS

MIN-ENERGY: 0.0
MAX-ENERGY: 0.0
MIN-DEMAND: 0.0
MAX-DEMAND: 0.0
QUALIFY-RATE: ALL-MONTHS
USE-MIN-QUAL: NO

BLOCK-CHARGES

DEMAND-RATCHETS

MIN-MON-RATCHETS

MONTH	METERED ENERGY THERM	BILLING ENERGY THERM	METERED DEMAND THERMS	BILLING DEMAND THERMS	ENERGY CHARGE ($)	DEMAND CHARGE ($)	ENERGY CST ADJ ($)	TAXES ($)	SURCHRG ($)	FIXED CHARGE ($)	MINIMUM CHARGE ($)	VIRTUAL RATE ($/UNIT)	TOTAL CHARGE ($)
JAN	18251	18251	406.4	406.4	12776	0	0	0	0	0	0	0.7000	12776
FEB	12385	12385	353.0	353.0	8670	0	0	0	0	0	0	0.7000	8670
MAR	4693	4693	145.8	145.8	3285	0	0	0	0	0	0	0.7000	3285
APR	1350	1350	55.5	55.5	945	0	0	0	0	0	0	0.7000	945
MAY	1102	1102	68.0	68.0	771	0	0	0	0	0	0	0.7000	771
JUN	398	398	12.4	12.4	279	0	0	0	0	0	0	0.7000	279
JUL	209	209	1.2	1.2	146	0	0	0	0	0	0	0.7000	146
AUG	238	238	4.4	4.4	167	0	0	0	0	0	0	0.7000	167
SEP	952	952	40.0	40.0	667	0	0	0	0	0	0	0.7000	667
OCT	1848	1848	84.8	84.8	1294	0	0	0	0	0	0	0.7000	1294
NOV	5517	5517	244.1	244.1	3862	0	0	0	0	0	0	0.7000	3862
DEC	11889	11889	310.0	310.0	8322	0	0	0	0	0	0	0.7000	8322
TOTAL	58833	58833	406.4		41183	0	0	0	0	0		0.7000	41183

S D L P R O C E S S O R I N P U T D A T A

Wed Nov 10 14:35:12 1993SDL RUN 2

```
* 379 *
* 380 *          TITLE     LINE-2 *RUN 2 VARIABLE AIR VOLUME SYSTEM *
* 381 *                    LINE-4 *ELECTRIC THERMOSTATIC BASEBOARDS *
* 382 *                    LINE-5 *WARM-UP CYCLE USES GAS HEAT*  ..
* 383 *
* 384 *                     $ HVAC SYSTEM DESCRIPTION
* 385 *
* 386 * $ DESIGN TEMPS  COOLING 78F  HEATING 70F.
* 387 * $ SYSTEM TYPE   A SINGLE VARIABLE AIR VOLUME SYSTEM SERVES THE ENTIRE BUILDING.
* 388 * $               THE SYSTEM HAS A DRY BULB CONTROLLED ECONOMIZER WITH A LIMIT
* 389 * $               TEMP OF 68F. THE FAN HAS INLET VANES.
* 390 * $               THE VAV BOXES HAVE A MINIMUM STOP OF 25%.
* 391 * $               ELECTRIC BASEBOARDS IN ALL PERIMETER SPACES ARE
* 392 * $               SUFFICIENTLY LARGE TO HEAT THE SPACE BUT NOT PICK UP THE HEATING
* 393 * $               LOAD ON A COLD WINTER MORNING; THEREFORE, A GAS WARM-UP CYCLE IS
* 394 * $               IS PROVIDED WHICH MINIMIZES THE USE OF THE ELECTRIC BASEBOARDS
* 395 * $               AND REDUCES THE ELECTRIC DEMAND CHARGES.  IT IS VERY DIFFICULT
* 396 * $               TO SIMULATE THE DYNAMICS OF THIS CONTROL STRATEGY CORRECTLY AS
* 397 * $               ON SOME MORNINGS SPACES ARE UNDERHEATED, AND ON OTHERS THEY ARE
* 398 * $               OVERHEATED.  THE OPERATOR OF THE BUILDING WOULD IN FACT NEED TO
* 399 * $               TUNE THE SUPPLY AIR TEMPERATURE SETPOINT TO ELIMINATE THE
* 400 * $               PROBLEM.
* 401 *
* 402 * $               THE SUPPLY AIR TEMPERATURE IS SET AT 100F FOR ONE HOUR ON WINTER
* 403 * $               MORNINGS AND THE CONTROL OF THE VAV BOXES OPENS THE BOXES
* 404 * $               FULL FOR THOSE HOURS. THE SUPPLY AIR TEMPERATURE IS 60F AT ALL
* 405 * $               OTHER TIMES. MINIMUM VENTILATION AIR IS 20 CFM/PERSON AND THE
* 406 * $               FAN OPERATES FROM 7AM TO 6PM WEEKDAYS AND IS OFF ON WEEKENDS AND
* 407 * $               HOLIDAYS.  THERE IS A NIGHT LOW LIMIT SETTING FOR PERIMETER
* 408 * $               THERMOSTATS TO HOLD SPACE AT 55F.  THE FANS DO NOT RUN AT NIGHT
* 409 * $               BUT CAN CYCLE ON AS EARLY 12 PM TO HOLD SETBACK.  THE MINIMUM OA
* 410 * $               DAMPERS ARE HELD CLOSED DURING MORNING STARTUP YEAR ROUND,
* 411 * $               HOWEVER THE ECONOMIZER DAMPERS ARE ACTIVATED IF NEEDED.
* 412 *
* 413 *          ABORT                ERRORS ..
* 414 *          DIAGNOSTIC           WARNINGS  ..
* 415 *          SYSTEMS-REPORT       SUMMARY=(SS-A,SS-D,SS-J) ..
* 416 *
* 417 *          $ SCHEDULES
* 418 *
* 419 *  HRS1          = DAY-SCHEDULE (1,7) (0) (8,18) (1) (19,24) (0)  ..
* 420 *  HRS2          = DAY-SCHEDULE (1,24) (0)   ..
* 421 *  DAYS1         = WEEK-SCHEDULE  (MON,FRI)  HRS1   (WEH)  HRS2    ..
* 422 *  AHU-SCHED     = SCHEDULE THRU DEC 31   DAYS1   ..           $ FANS $
* 423 *
* 424 *  HRSH1         = DAY-SCHEDULE (1,8) (55)  (9,18) (70)  (19,24) (55)  ..
* 425 *  HRSH2         = DAY-SCHEDULE (1,24) (55)   ..
* 426 *  DAYHEAT       = WEEK-SCHEDULE (MON,FRI)   HRSH1   (WEH)   HRSH2   ..
* 427 *  THEAT         = SCHEDULE THRU DEC 31   DAYHEAT   ..     $ HEATING $
* 428 *
* 429 *  HRSC1         = DAY-SCHEDULE  (1,7) (99)  (8,18) (78)  (19,24) (99)   ..
* 430 *  HRSC2         = DAY-SCHEDULE  (1,24) (99)   ..
* 431 *  DAYCOOL       = WEEK-SCHEDULE  (MON,FRI)  HRSC1   (WEH)  HRSC2   ..
* 432 *  TCOOL         = SCHEDULE THRU DEC 31   DAYCOOL   ..     $ COOLING $
* 433 *
```

```
* 434 * COOLON        = SCHEDULE THRU DEC 31 (ALL) (1,24) (55)  ..
* 435 * HEATON        = SCHEDULE THRU DEC 31 (ALL) (1,24) (60)  ..
* 436 *
* 437 * REV-STAT-ACT  = SCHEDULE THRU MAR 15 (ALL) (1,8)(1) (9,24)(-999)
* 438 *                          THRU DEC 15 (ALL) (1,24) (-999)
* 439 *                          THRU DEC 31 (ALL) (1,8)(1) (9,24)(-999)  ..
* 440 *
* 441 * SA1 = DAY-SCHEDULE  (1,8)(110) (9,18)(60) (19,24)(110)  ..
* 442 * SA2 = DAY-SCHEDULE  (1,8)(90)  (9,18)(60) (19,24)(90)  ..
* 443 * SAT-SETPT = SCHEDULE THRU MAR 15 (MON) SA1 (TUE,FRI) SA2 (WEH) (1,24)(110)
* 444 *                     THRU MAY 15 (WD) SA2 (WEH) (1,24)(90)
* 445 *                     THRU SEP 15 (ALL) (1,24)(55)
* 446 *                     THRU OCT 15 (WD) SA2 (WEH) (1,24)(90)
* 447 *                     THRU DEC 31 (MON) SA1 (TUE,FRI) SA2 (WEH) (1,24)(110)  ..
* 448 *
* 449 * OA-DAMPER-POS = SCHEDULE THRU DEC 31 (ALL)(1,8)(.01)(9,18)(-999)(19,24)(.01)  ..
* 450 *
* 451 *          $ ZONE SUB-COMMANDS
* 452 *
* 453 *  ZAIR         = ZONE-AIR      OA-CFM/PER=20  ..
* 454 *
* 455 *  CONTROL      = ZONE-CONTROL  DESIGN-HEAT-T=70  DESIGN-COOL-T=74
* 456 *                               HEAT-TEMP-SCH=THEAT  COOL-TEMP-SCH=TCOOL
* 457 *                               BASEBOARD-CTRL=THERMOSTATIC
* 458 *                               THERMOSTAT-TYPE=REVERSE-ACTION  ..
* 459 *
* 460 *          $ ZONE DESCRIPTION
* 461 *
* 462 * RZ1      = ZONE              ZONE-AIR=ZAIR  ZONE-CONTROL=CONTROL
* 463 *                               MIN-CFM-SCH=REV-STAT-ACT  CFM/SQFT=1
* 464 *                               BASEBOARD-RATING=-55000  ..
* 465 * RZ2      = ZONE  LIKE RZ1  BASEBOARD-RATING=-140000  ..
* 466 * RZ3      = ZONE  LIKE RZ2  B-R=-69000  ..
* 467 * RZ4      = ZONE  LIKE RZ2  ..
* 468 * RZ5      = ZONE  LIKE RZ3  ..
* 469 * TZ1      = ZONE  LIKE RZ1  ..
* 470 * TZ2      = ZONE  LIKE RZ2  B-R=-120000  ..
* 471 * TZ3      = ZONE  LIKE TZ2  B-R=-60000  ..
* 472 * TZ4      = ZONE  LIKE TZ2  ..
* 473 * TZ5      = ZONE  LIKE TZ3  ..
* 474 * A-STORAGE= ZONE  LIKE RZ1     AIR-CHANGES/HR=4  OA-CHANGES=0.5  ..
* 475 *
* 476 *          $ SYSTEM SUB-COMMANDS
* 477 *
* 478 *  S-CTRL  = SYSTEM-CONTROL     COOLING-SCHEDULE=COOLON
* 479 *                               HEATING-SCHEDULE=HEATON  COOL-CONTROL = SCHEDULED
* 480 *                               HEAT-SET-T=100   COOL-SET-SCH=SAT-SETPT
* 481 *                               MIN-SUPPLY-T=55  MAX-SUPPLY-T=100
* 482 *                               MIN-HUMIDITY=25  ..
* 483 *
* 484 *  S-FAN   = SYSTEM-FANS        FAN-SCHEDULE=AHU-SCHED  FAN-CONTROL=INLET
* 485 *                               SUPPLY-STATIC=5.5  SUPPLY-EFF=0.55
* 486 *                               RETURN-STATIC=2.0  RETURN-EFF=0.53 ..
* 487 *
* 488 *  S-TERM  = SYSTEM-TERMINAL    REHEAT-DELTA-T=20  MIN-CFM-RATIO=0.25 ..
* 489 *
* 490 *          $ SYSTEM DESCRIPTION
* 491 *
* 492 *  BLDG    = SYSTEM              SYSTEM-TYPE=VAVS  SYSTEM-CONTROL=S-CTRL
* 493 *                               SYSTEM-FANS=S-FAN  MIN-AIR-SCH=OA-DAMPER-POS
* 494 *                               SYSTEM-TERMINAL=S-TERM  RETURN-AIR-PATH=DUCT
* 495 *                               BASEBOARD-SOURCE=ELECTRIC  PREHEAT=HOT-WATER
* 496 *                               HEAT-SOURCE=HOT-WATER  HUMIDIFIER-TYPE=HOT-WATER
```

```
* 497 *                                ECONO-LIMIT-T=68  ZONE-NAMES=(RZ1,RZ2,RZ3,RZ4,
* 498 *                                 RZ5,TZ1,TZ2,TZ3,TZ4,TZ5)  ..
* 499 *
* 500 * BASMT-SYS = SYSTEM              SYSTEM-TYPE=SZRH  MAX-SUPPLY-T=105
* 501 *                                MIN-SUPPLY-T=55   SUPPLY-STATIC=2.5
* 502 *                                SUPPLY-EFF=.5     FAN-SCHEDULE=AHU-SCHED
* 503 *                                HEATING-SCHEDULE=HEATON  HEAT-SOURCE=ELECTRIC
* 504 *                                COOLING-SCHEDULE=COOLON
* 505 *                                ZONE-NAMES=(A-STORAGE)  ..
* 506 *
* 507 * PLANT1  = PLANT-ASSIGNMENT  SYSTEM-NAMES = (BLDG,BASMT-SYS)
* 508 *                            INT-ELEC-KW = 100  $ FOR ELEVATORS
* 509 *                            INT-ELEC-SCH = OCCUP
* 510 *                            DHW-SIZE=0
* 511 *                            DHW-GAL/MIN  = 2.22
* 512 *                            DHW-SCH      = OCCUP  ..
* 513 *
* 514 * OC1           =DAY-SCHEDULE        (1,8) (0.)          (9,10) (1.)
* 515 *                                    (11,13) (.8,.4,.8)  (14,24) (1.,1.,1.,
* 516 *                                                  .3,.1,.1,.1,0.,0.,0.,0.)  ..
* 517 * OC2           =DAY-SCHEDULE        (1,24) (0.0)  ..
* 518 * PEOPLE        =WEEK-SCHEDULE       (MON,FRI)  OC1      (WEH)  OC2  ..
* 519 * OCCUP         =SCHEDULE            THRU DEC 31  PEOPLE   ..
* 520 * END   ..
* 521 * COMPUTE SYSTEMS   ..
* 522 * INPUT PLANT  ..
```

```
* 523 * PLANT1 = PLANT-ASSIGNMENT  ..
* 524 *
* 525 *          PLANT-REPORT        SUMMARY=(PS-A,BEPS) ..
* 526 *
* 527 *          $ EQUIPMENT DESCRIPTION
* 528 *
* 529 * $ THE PLANT USES CHILLED WATER STORAGE. THE CHILLER CHARGES
* 530 * $ THE TANKS AT NIGHT. STORED CHILLED WATER IS RELEASED FROM 12NOON TO 5PM,
* 531 * $ WHICH IS THE ON-PEAK PERIOD OF THE TIME-OF-DAY RATE SCHEDULE.
* 532 * $ THE CHILLER PROVIDES OFF-PEAK COOLING AND SUPPLEMENTS THE TANK
* 533 * $ DURING THE ON-PEAK PERIOD IF NECESSARY.
* 534 * $ DAYTIME HEATING IS DONE WITH ELECTRIC BASEBOARDS,
* 535 * $ BUT FOR NIGHTTIME HEATING AND FOR EARLY MORNING
* 536 * $ START-UP A GAS HOT WATER GENERATOR IS USED.
* 537 *
* 538 * CMPC     =PLANT-EQUIPMENT     TYPE=HERM-CENT-CHLR  SIZE=13.5  I-N=2  ..
* 539 *
* 540 * DHWH     =PLANT-EQUIPMENT     TYPE=ELEC-DHW-HEATER  SIZE -999  ..
* 541 *
* 542 * HWG      =PLANT-EQUIPMENT     TYPE=HW-BOILER  SIZE=-999  ..
* 543 *
* 544 * CTWR     =PLANT-EQUIPMENT     TYPE=COOLING-TWR  SIZE=-999  ..
* 545 *
* 546 * CTANK    =PLANT-EQUIPMENT     TYPE=CTANK-STORAGE  SIZE=50  I-N=1  ..
* 547 *
* 548 *
* 549 * ENERGY-STORAGE  COOL-STORE-RATE=13.5  COOL-SUPPLY-RATE=13.5
* 550 *                 COOL-STORE-SCH=TANK-CHG  CTANK-LOSS-COEF=50
* 551 *                 CTANK-BASE-T=54  CTANK-T-RANGE=10  CTANK-ENV-T=53  ..
* 552 *
* 553 * TANK-CHG=SCHEDULE THRU MAY 1 (ALL) (1,24) (0)
* 554 *                  THRU OCT 1 (ALL) (1,7) (1) (8,24) (0)
* 555 *                  THRU DEC 31 (ALL) (1,24) (0)  ..
* 556 *
* 557 * TANK-CHARGE =LOAD-ASSIGNMENT  TYPE=COOLING  LOAD-RANGE=13.5
* 558 *                               PLANT-EQUIPMENT=CMPC   N=1  ..
* 559 *
* 560 * RELEASE-CHG =LOAD-ASSIGNMENT  TYPE=COOLING  LOAD-RANGE=27
* 561 *                               PLANT-EQUIPMENT=CTANK  N=1
* 562 *                               PLANT-EQUIPMENT=CMPC   N=1  ..
* 563 *
* 564 * OFF-PEAK-CLG=LOAD-ASSIGNMENT  TYPE=COOLING  LOAD-RANGE=27
* 565 *                               PLANT-EQUIPMENT =CMPC  N=2  ..
* 566 *
* 567 * CHW-CTRL =DAY-ASSIGN-SCH (1,7) (TANK-CHARGE)  (8,12) (OFF-PEAK-CLG)
* 568 *                           (13,17) (RELEASE-CHG) (18,24) (OFF-PEAK-CLG)  ..
* 569 * WEH-CTRL =DAY-ASSIGN-SCH (1,24) (OFF-PEAK-CLG)  ..
* 570 *
* 571 * CHILLER-CTRL=SCHEDULE THRU DEC 31 (WD) CHW-CTRL (WEH) WEH-CTRL  ..
* 572 *
* 573 * LOAD-MANAGEMENT  PRED-LOAD-RANGE=999
* 574 *                 ASSIGN-SCHEDULE=(DEFAULT,CHILLER-CTRL,DEFAULT)  ..
* 575 *
* 576 * END  ..
* 577 * COMPUTE PLANT  ..
```

```
* 578 *
* 579 * INPUT ECONOMICS ..
```

```
* 580 *
* 581 *                    $ ENERGY COST DESCRIPTION
* 582 *
* 583 * $ ELECTRICITY IS CHARGED ACCORDING TO A TIME-OF-DAY SCHEDULE THAT CHANGES FROM
* 584 * $ SUMMER TO WINTER SEASONS.  THE DEMAND CHARGE ALSO CHANGES, FROM 5 DOLLARS/KW
* 585 * $ IN WINTER TO 6 DOLLARS/KW IN SUMMER.
* 586 * $ THERE IS NO RATCHET OR OTHER SPECIAL FEATURES.
* 587 * $ HOWEVER, NOTE THAT IT IS ASSUMED THAT THE PEAK DEMAND
* 588 * $ OCCURS DURING THE ON-PEAK PERIOD SINCE THERE IS NO DEMAND CHARGE FOR
* 589 * $ THE OFF-PEAK OR SHOULDER PERIODS.
* 590 *
* 591 * ECONOMICS-REPORT  S=(ES-D,ES-E,ES-F)  ..
* 592 *
* 593 * GAS-RATE = UTILITY-RATE    RESOURCE=NATURAL-GAS
* 594 *                           ENERGY-CHG = .60  ..
* 595 *
* 596 * ELEC-RATE = UTILITY-RATE   RESOURCE = ELECTRICITY
* 597 *                           BLOCK-CHARGES = (WINTER-OFF-P,WINTER-SHOUL,
* 598 *                                            WINTER-ON-P,SUMMER-OFF-P,
* 599 *                                            SUMMER-SHOUL,SUMMER-ON-P
* 600 *                                            WINTER-DEMAND,SUMMER-DEMAND)  ..
* 601 *
* 602 *       $ THE FLAGS USED IN THE BLOCK-CHARGES AND SCHEDULE BELOW
* 603 *
* 604 *       $                     WINTER    SUMMER
* 605 *       $           OFF-PEAK    1.1       2.1
* 606 *       $           SHOULDER    1.2       2.2
* 607 *       $           ON-PEAK     1.3       2.3
* 608 *
* 609 * WINTER-OFF-P = BLOCK-CHARGE  BLOCK-SCH = SEASONS-SCH
* 610 *                             SCH-FLAG  = 1.1
* 611 *                             BLOCK1-TYPE = KWH/KW
* 612 *                             BLOCK1-DATA = (200,.04,0
* 613 *                                            800,.05,0)  ..
* 614 * WINTER-SHOUL = BLOCK-CHARGE  BLOCK-SCH =SEASONS-SCH
* 615 *                             SCH-FLAG  = 1.2
* 616 *                             BLOCK1-TYPE = KWH/KW
* 617 *                             BLOCK1-DATA = (200,.045,0
* 618 *                                            800,.055,0)  ..
* 619 * WINTER-ON-P  = BLOCK-CHARGE  BLOCK-SCH = SEASONS-SCH
* 620 *                             SCH-FLAG  = 1.3
* 621 *                             BLOCK1-TYPE = KWH/KW
* 622 *                             BLOCK1-DATA = (200,.05,0
* 623 *                                            800,.06,0)  ..
* 624 *
* 625 * WINTER-DEMAND = BLOCK-CHARGE BLOCK-SCH = SEASONS-SCH
* 626 *                             SCH-FLAG  = 1.3
* 627 *                             TOU-SEASON-LINKS = (SUMMER-DEMAND)
* 628 *                             BLOCK1-TYPE = DEMAND
* 629 *                             BLOCK1-DATA = ( 1,5.00)  ..
* 630 *
* 631 * SUMMER-OFF-P = BLOCK-CHARGE  BLOCK-SCH = SEASONS-SCH
* 632 *                             SCH-FLAG  = 2.1
* 633 *                             BLOCK1-TYPE = KWH/KW
* 634 *                             BLOCK1-DATA = (175,.045,0
```

```
* 635 *                                          800,.055,0)  ..
* 636 * SUMMER-SHOUL = BLOCK-CHARGE  BLOCK-SCH = SEASONS-SCH
* 637 *                             SCH-FLAG  = 2.2
* 638 *                             BLOCK1-TYPE = KWH/KW
* 639 *                             BLOCK1-DATA = (175,.055,0
* 640 *                                          800,.065,0)  ..
* 641 * SUMMER-ON-P  = BLOCK-CHARGE  BLOCK-SCH = SEASONS-SCH
* 642 *                             SCH-FLAG  = 2.3
* 643 *                             BLOCK1-TYPE = KWH/KW
* 644 *                             BLOCK1-DATA = (175,.065,0
* 645 *                                          800,.075,0)  ..
* 646 *
* 647 * SUMMER-DEMAND = BLOCK-CHARGE BLOCK-SCH = SEASONS-SCH
* 648 *                             SCH-FLAG  = 2.3
* 649 *                             TOU-SEASON-LINKS = (WINTER-DEMAND)
* 650 *                             BLOCK1-TYPE = DEMAND
* 651 *                             BLOCK1-DATA = ( 1,6.00)  ..
* 652 *
* 653 * SEASONS-SCH  SCHEDULE  THRU MAY 15 (WD) (1,8)(1.1) (9,12)(1.2) (13,17)(1.3)
* 654 *                                      (18,22)(1.2) (23,24)(1.1)
* 655 *                                 (WEH) (1,8)(1.1)  (9,24)(1.2)
* 656 *                        THRU SEP 15 (WD) (1,8)(2.1) (9,12)(2.2) (13,18)(2.3)
* 657 *                                      (19,24)(2.2)
* 658 *                                 (WEH) (1,8)(2.1) (9,24)(2.2)
* 659 *                        THRU DEC 31 (WD) (1,8)(1.1) (9,12)(1.2) (13,17)(1.3)
* 660 *                                      (18,22)(1.2) (23,24)(1.1)
* 661 *                                 (WEH) (1,8)(1.1)  (9,24)(1.2)   ..
* 662 * END  ..
* 663 * COMPUTE ECONOMICS  ..
* 664 * INPUT SYSTEMS  ..
```

SYSTEM NAME	SYSTEM TYPE	ALTITUDE MULTIPLIER	FLOOR AREA (SQFT)	MAX PEOPLE
BLDG	VAVS	1.020	620000.0	4402.

SUPPLY FAN (CFM)	ELEC (KW)	DELTA-T (F)	RETURN FAN (CFM)	ELEC (KW)	DELTA-T (F)	OUTSIDE AIR RATIO	COOLING CAPACITY (KBTU/HR)	SENSIBLE (SHR)	HEATING CAPACITY (KBTU/HR)	COOLING EIR (BTU/BTU)	HEATING EIR (BTU/BTU)
849109.	977.066	3.6	849109.	368.704	1.4	0.106	33083.254	0.676	-30765.266	0.00	0.37

ZONE NAME	SUPPLY FLOW (CFM)	EXHAUST FLOW (CFM)	FAN (KW)	MINIMUM FLOW RATIO	OUTSIDE AIR FLOW (CFM)	COOLING CAPACITY (KBTU/HR)	SENSIBLE (SHR)	EXTRACTION RATE (KBTU/HR)	HEATING CAPACITY (KBTU/HR)	ADDITION RATE (KBTU/HR)	MULTIPLIER
RZ1	12138.	0.	0.000	0.250	1224.	0.00	0.00	249.07	-262.18	-448.27	1.0
RZ2	5391.	0.	0.000	0.250	571.	0.00	0.00	110.63	-116.45	-314.67	1.0
RZ3	1672.	0.	0.000	0.250	265.	0.00	0.00	34.31	-36.11	-123.17	1.0
RZ4	5348.	0.	0.000	0.250	571.	0.00	0.00	109.74	-115.51	-313.27	1.0
RZ5	2336.	0.	0.000	0.250	265.	0.00	0.00	47.93	-50.45	-144.68	1.0
TZ1	12138.	0.	0.000	0.250	1224.	0.00	0.00	249.07	-262.18	-448.27	30.0
TZ2	5418.	0.	0.000	0.250	571.	0.00	0.00	111.18	-117.03	-295.54	30.0
TZ3	1627.	0.	0.000	0.250	265.	0.00	0.00	33.39	-35.15	-112.73	30.0
TZ4	5785.	0.	0.000	0.250	571.	0.00	0.00	118.70	-124.95	-307.42	30.0
TZ5	2440.	0.	0.000	0.250	265.	0.00	0.00	50.06	-52.69	-139.04	30.0

SYSTEM NAME	SYSTEM TYPE	ALTITUDE MULTIPLIER	FLOOR AREA (SQFT)	MAX PEOPLE
BASMT-SYS	SZRH	1.020	20000.0	0.

SUPPLY FAN (CFM)	ELEC (KW)	DELTA-T (F)	RETURN FAN (CFM)	ELEC (KW)	DELTA-T (F)	OUTSIDE AIR RATIO	COOLING CAPACITY (KBTU/HR)	SENSIBLE (SHR)	HEATING CAPACITY (KBTU/HR)	COOLING EIR (BTU/BTU)	HEATING EIR (BTU/BTU)
27200.	15.649	1.8	0.	0.000	0.0	0.125	948.825	0.721	-1227.298	0.00	0.37

ZONE NAME	SUPPLY FLOW (CFM)	EXHAUST FLOW (CFM)	FAN (KW)	MINIMUM FLOW RATIO	OUTSIDE AIR FLOW (CFM)	COOLING CAPACITY (KBTU/HR)	SENSIBLE (SHR)	EXTRACTION RATE (KBTU/HR)	HEATING CAPACITY (KBTU/HR)	ADDITION RATE (KBTU/HR)	MULTIPLIER
A-STORAGE	27200.	0.	0.000	1.000	3400.	0.00	0.00	558.14	0.00	-1083.16	1.0

	COOLING						HEATING						ELEC	
MONTH	COOLING ENERGY (MBTU)	TIME OF MAX DY	TIME OF MAX HR	DRY-BULB TEMP	WET-BULB TEMP	MAXIMUM COOLING LOAD (KBTU/HR)	HEATING ENERGY (MBTU)	TIME OF MAX DY	TIME OF MAX HR	DRY-BULB TEMP	WET-BULB TEMP	MAXIMUM HEATING LOAD (KBTU/HR)	ELEC-TRICAL ENERGY (KWH)	MAXIMUM ELEC LOAD (KW)
JAN	0.00000					0.000	-480.937	11	8	15.F	14.F	-25227.889	718884.	5016.672
FEB	0.00000					0.000	-424.595	8	8	7.F	6.F	-25438.799	597583.	4303.577
MAR	83.19585	3	16	79.F	62.F	7999.346	-256.093	1	8	28.F	27.F	-20184.379	607251.	3695.740
APR	605.01703	28	15	78.F	68.F	13718.789	-128.728	9	17	47.F	36.F	-2658.760	525790.	2333.793
MAY	681.43768	21	14	85.F	75.F	16606.508	-73.512	6	17	48.F	38.F	-3559.978	480318.	2161.021
JUN	2267.18628	21	16	82.F	72.F	19424.721	-0.127	16	8	54.F	48.F	-122.216	532027.	2288.137
JUL	3411.16089	19	8	77.F	72.F	23438.977	0.000					0.000	522663.	2419.513
AUG	3058.12817	16	8	72.F	68.F	21856.553	0.000					0.000	537604.	2311.094
SEP	1121.87512	10	15	82.F	70.F	15121.777	-54.955	23	17	59.F	46.F	-2273.243	502109.	2188.370
OCT	345.68723	5	16	74.F	62.F	9919.728	-85.576	18	8	43.F	41.F	-3569.758	478057.	2165.382
NOV	158.14256	2	16	77.F	62.F	10400.727	-101.933	15	8	27.F	26.F	-7094.745	573664.	4715.411
DEC	0.00000					0.000	-256.720	27	8	31.F	30.F	-25258.002	696788.	4494.943
TOTAL	11731.829						-1863.177						6772698.	
MAX						23438.977						-25438.799		5016.672

MAXIMUM DAILY INTEGRATED COOLING LOAD (DES DAY) 0.000 (KBTU)
MAXIMUM DAILY INTEGRATED COOLING LOAD (WTH FILE) 230887.600 (KBTU)

31-STORY OFFICE BLDG, CHICAGO - LOAD1 RUN 2 VARIABLE AIR VOLUME SYSTEM DOE-2.1E-001 Wed Nov 10 14:35:12 1993SDL RUN 2
ELECTRIC THERMOSTATIC BASEBOARDS WARM-UP CYCLE USES GAS HEAT
REPORT- SS-A SYSTEM MONTHLY LOADS SUMMARY FOR BLDG WEATHER FILE- TRY CHICAGO

	COOLING						HEATING						ELEC	
MONTH	COOLING ENERGY (MBTU)	TIME OF MAX DY	TIME OF MAX HR	DRY-BULB TEMP	WET-BULB TEMP	MAXIMUM COOLING LOAD (KBTU/HR)	HEATING ENERGY (MBTU)	TIME OF MAX DY	TIME OF MAX HR	DRY-BULB TEMP	WET-BULB TEMP	MAXIMUM HEATING LOAD (KBTU/HR)	ELEC-TRICAL ENERGY (KWH)	MAXIMUM ELEC LOAD (KW)
JAN	0.00000					0.000	-1228.748	11	8	15.F	14.F	-25227.889	686369.	4731.019
FEB	0.00000					0.000	-850.592	8	8	7.F	6.F	-25438.799	566911.	4092.727
MAR	83.19585	3	16	79.F	62.F	7999.346	-431.543	1	8	28.F	27.F	-20184.379	573556.	3510.529
APR	605.01703	28	15	78.F	68.F	13718.789	-137.147	16	12	51.F	40.F	-2657.328	496185.	2167.263
MAY	681.13385	21	14	85.F	75.F	16518.898	-74.092	6	17	48.F	38.F	-3559.978	453719.	2076.871
JUN	2261.16309	21	16	82.F	72.F	19304.686	-0.127	16	8	54.F	48.F	-122.216	502915.	2203.988
JUL	3384.38525	19	8	77.F	72.F	23257.844	0.000					0.000	494790.	2335.364
AUG	3039.20337	16	8	72.F	68.F	21856.553	0.000					0.000	508457.	2226.944
SEP	1117.51477	10	15	82.F	70.F	14948.386	-55.046	23	17	59.F	46.F	-2273.243	474262.	2104.220
OCT	345.51819	5	16	74.F	62.F	9919.728	-93.907	18	8	43.F	41.F	-3569.758	451453.	2081.232
NOV	158.08046	2	16	77.F	62.F	10338.622	-435.736	15	9	28.F	26.F	-14506.762	546747.	4559.283
DEC	0.00000					0.000	-894.017	27	8	31.F	30.F	-25258.002	666612.	4322.104
TOTAL	11675.214						-4200.956						6421994.	
MAX						23257.844						-25438.799		4731.019

	-----COOLING-----				---HEATING---			DAY COOLING PEAK			
	JUL 19				FEB 8			JUL 19			
HOUR	HOURLY COOLING LOAD (KBTU)	SENSIBLE HEAT RATIO	DRY-BULB TEMP	WET-BULB TEMP	HOURLY HEATING LOAD (KBTU)	DRY-BULB TEMP	WET-BULB TEMP	HOURLY COOLING LOAD (KBTU)	SENSIBLE HEAT RATIO	DRY-BULB TEMP	WET-BULB TEMP
1	0.000	0.000	79.F	72.F	-1676.769	14.F	12.F	0.000	0.000	79.F	72.F
2	0.000	0.000	79.F	72.F	-1777.842	12.F	11.F	0.000	0.000	79.F	72.F
3	0.000	0.000	78.F	72.F	-1863.587	9.F	8.F	0.000	0.000	78.F	72.F
4	0.000	0.000	78.F	72.F	-2201.448	8.F	7.F	0.000	0.000	78.F	72.F
5	0.000	0.000	77.F	72.F	-2206.422	6.F	5.F	0.000	0.000	77.F	72.F
6	0.000	0.000	78.F	72.F	-2255.855	5.F	4.F	0.000	0.000	78.F	72.F
7	23257.844	0.984	77.F	72.F	-2305.349	5.F	5.F	23257.844	0.984	77.F	72.F
8	22514.631	0.842	79.F	72.F	-25438.799	7.F	6.F	22514.631	0.842	79.F	72.F
9	21396.689	0.852	82.F	72.F	-2892.448	13.F	11.F	21396.689	0.852	82.F	72.F
10	21279.252	0.855	85.F	73.F	-11614.917	14.F	12.F	21279.252	0.855	85.F	73.F
11	21347.191	0.865	88.F	74.F	-9849.519	17.F	14.F	21347.191	0.865	88.F	74.F
12	20449.969	0.854	89.F	74.F	-8485.560	19.F	16.F	20449.969	0.854	89.F	74.F
13	20894.680	0.837	90.F	75.F	-7360.321	21.F	17.F	20894.680	0.837	90.F	75.F
14	20834.625	0.832	89.F	75.F	-5674.086	21.F	17.F	20834.625	0.832	89.F	75.F
15	21063.539	0.836	90.F	75.F	-5062.012	21.F	17.F	21063.539	0.836	90.F	75.F
16	18657.373	0.836	91.F	76.F	-3646.734	21.F	17.F	18657.373	0.836	91.F	76.F
17	17188.213	0.841	90.F	75.F	-4622.370	20.F	17.F	17188.213	0.841	90.F	75.F
18	0.000	0.000	86.F	74.F	-5997.368	18.F	15.F	0.000	0.000	86.F	74.F
19	0.000	0.000	86.F	74.F	0.000	17.F	15.F	0.000	0.000	86.F	74.F
20	0.000	0.000	80.F	72.F	0.000	15.F	13.F	0.000	0.000	80.F	72.F
21	0.000	0.000	79.F	72.F	0.000	13.F	12.F	0.000	0.000	79.F	72.F
22	0.000	0.000	77.F	71.F	0.000	13.F	12.F	0.000	0.000	77.F	71.F
23	0.000	0.000	76.F	71.F	0.000	12.F	11.F	0.000	0.000	76.F	71.F
24	0.000	0.000	74.F	70.F	0.000	9.F	8.F	0.000	0.000	74.F	70.F
	---				---			---			
SUM								228884.000			
MAX	23257.844				-25438.799						

SYSTEM-TYPE	VAVS	SQFT/TON	319.9
COOLING PEAK	37.51 (BTU/HR- SQFT)	HEATING PEAK	-41.03 (BTU/HR- SQFT)
SUPPLY AIR PEAK FLOW	1.37 (CFM/SQFT)	MIN-OA/PERSON	20.40 (CFM)
OA FRAC AT CLG PEAK	0.012	OA FRAC AT HTG PEAK	0.010

* ASTERISKS INDICATE HOURS LOADS NOT MET

31-STORY OFFICE BLDG, CHICAGO - LOAD1 RUN 2 VARIABLE AIR VOLUME SYSTEM DOE-2.1E-001 Wed Nov 10 14:35:12 1993SDL RUN 2
ELECTRIC THERMOSTATIC BASEBOARDS WARM-UP CYCLE USES GAS HEAT
REPORT- SS-A SYSTEM MONTHLY LOADS SUMMARY FOR BASMT-SYS WEATHER FILE- TRY CHICAGO

	COOLING						HEATING						ELEC	
MONTH	COOLING ENERGY (MBTU)	TIME OF MAX DY	TIME OF MAX HR	DRY-BULB TEMP	WET-BULB TEMP	MAXIMUM COOLING LOAD (KBTU/HR)	HEATING ENERGY (MBTU)	TIME OF MAX DY	TIME OF MAX HR	DRY-BULB TEMP	WET-BULB TEMP	MAXIMUM HEATING LOAD (KBTU/HR)	ELEC-TRICAL ENERGY (KWH)	MAXIMUM ELEC LOAD (KW)
JAN	0.00000					0.000	-30.984	4	9	4.F	3.F	-543.070	17315.	185.654
FEB	0.00000					0.000	-28.954	8	9	13.F	11.F	-305.531	16233.	116.055
MAR	0.00000					0.000	-21.719	1	9	30.F	28.F	-239.701	16215.	96.767
APR	0.00000					0.000	-5.086	19	9	39.F	35.F	-144.093	12885.	68.754
MAY	0.30392	21	13	87.F	76.F	93.557	-0.012	10	9	46.F	43.F	-12.392	11399.	44.150
JUN	6.02330	9	15	83.F	73.F	165.044	0.000					0.000	12391.	44.149
JUL	26.77848	13	17	97.F	78.F	259.228	0.000					0.000	11913.	44.149
AUG	18.92442	26	17	94.F	76.F	254.092	0.000					0.000	12427.	44.149
SEP	4.36051	10	11	77.F	69.F	191.406	-0.035	22	8	34.F	31.F	-14.893	11887.	47.013
OCT	0.16904	4	17	78.F	61.F	68.037	-0.017	1	8	33.F	32.F	-15.733	11404.	47.259
NOV	0.06210	2	16	77.F	62.F	62.104	-3.910	29	9	29.F	28.F	-138.523	11717.	67.122
DEC	0.00000					0.000	-18.103	27	9	31.F	30.F	-217.205	14217.	90.176
TOTAL	56.622						-108.819						160002.	
MAX						259.228						-543.070		185.654

	-----COOLING-----				---HEATING---			DAY COOLING PEAK			
	JUL 13				JAN 4			JUL 14			
HOUR	HOURLY COOLING LOAD (KBTU)	SENSIBLE HEAT RATIO	DRY-BULB TEMP	WET-BULB TEMP	HOURLY HEATING LOAD (KBTU)	DRY-BULB TEMP	WET-BULB TEMP	HOURLY COOLING LOAD (KBTU)	SENSIBLE HEAT RATIO	DRY-BULB TEMP	WET-BULB TEMP
1	0.000	0.000	76.F	66.F	0.000	6.F	6.F	0.000	0.000	83.F	72.F
2	0.000	0.000	74.F	66.F	0.000	5.F	5.F	0.000	0.000	81.F	72.F
3	0.000	0.000	74.F	65.F	0.000	4.F	4.F	0.000	0.000	80.F	71.F
4	0.000	0.000	73.F	62.F	0.000	4.F	4.F	0.000	0.000	78.F	71.F
5	0.000	0.000	72.F	62.F	0.000	3.F	3.F	0.000	0.000	77.F	70.F
6	0.000	0.000	72.F	63.F	0.000	3.F	3.F	0.000	0.000	78.F	71.F
7	0.000	0.000	73.F	65.F	0.000	2.F	2.F	171.014	0.696	79.F	71.F
8	123.313	0.526	76.F	69.F	0.000	2.F	2.F	184.646	0.699	82.F	72.F
9	169.597	0.703	82.F	72.F	-543.070	4.F	3.F	211.456	0.687	86.F	74.F
10	198.345	0.681	86.F	74.F	-495.242	7.F	6.F	213.700	0.714	88.F	74.F
11	221.819	0.661	89.F	76.F	-465.945	11.F	9.F	238.488	0.686	91.F	76.F
12	240.226	0.642	93.F	78.F	-427.645	16.F	13.F	233.342	0.715	94.F	76.F
13	242.319	0.666	95.F	78.F	-409.028	18.F	15.F	246.195	0.707	96.F	77.F
14	239.493	0.710	96.F	77.F	-383.750	20.F	16.F	212.832	0.704	87.F	74.F
15	243.268	0.718	97.F	77.F	-362.419	20.F	16.F	177.021	0.454	76.F	71.F
16	259.228	0.689	97.F	78.F	-346.622	20.F	16.F	183.168	0.668	78.F	72.F
17	242.758	0.735	99.F	77.F	-332.858	19.F	15.F	179.725	0.653	78.F	72.F
18	0.000	0.000	97.F	76.F	-336.910	16.F	13.F	0.000	0.000	89.F	75.F
19	0.000	0.000	95.F	75.F	0.000	13.F	11.F	0.000	0.000	87.F	75.F
20	0.000	0.000	93.F	75.F	0.000	11.F	9.F	0.000	0.000	84.F	74.F
21	0.000	0.000	90.F	74.F	0.000	10.F	8.F	0.000	0.000	84.F	74.F
22	0.000	0.000	87.F	73.F	0.000	11.F	9.F	0.000	0.000	82.F	74.F
23	0.000	0.000	86.F	73.F	0.000	7.F	6.F	0.000	0.000	80.F	72.F
24	0.000	0.000	85.F	73.F	0.000	6.F	5.F	0.000	0.000	78.F	72.F
SUM								2251.587			
MAX	259.228				-543.070						

SYSTEM-TYPE SZRH SQFT/TON 925.8
COOLING PEAK 12.96 (BTU/HR- SQFT) HEATING PEAK -27.15 (BTU/HR- SQFT)
SUPPLY AIR PEAK FLOW 1.36 (CFM/SQFT)
OA FRAC AT CLG PEAK 0.125 OA FRAC AT HTG PEAK 0.125

* ASTERISKS INDICATE HOURS LOADS NOT MET

EQUIPMENT	SIZE (MBTU/H)	NUMBER INSTD	NUMBER AVAIL	SIZE (MBTU/H)	NUMBER INSTD	NUMBER AVAIL	SIZE (MBTU/H)	NUMBER INSTD	NUMBER AVAIL	SIZE (MBTU/H)	NUMBER INSTD	NUMBER AVAIL	SIZE (MBTU/H)	NUMBER INSTD	NUMBER AVAIL
HW-BOILER	25.608	1	1												
ELEC-DHW-HEATER	0.114	1	1												
HERM-CENT-CHLR	13.500	2	2												
COOLING-TWR	10.913	3	3												
CTANK-STORAGE	50.000	1	1												

COOL-STORE-RATE = 13.500 (MBTU/H)
COOL-SUPPLY-RATE= 13.500 (MBTU/H)

	SITE ENERGY												SOURCE
	2	3	4	5	6	7	8	9	10	11	12	13	14
MONTH	TOTAL HEAT LOAD (MBTU)	TOTAL COOLING LOAD (MBTU)	TOTAL ELECTR LOAD (MWH)	RCVRED ENERGY (MBTU)	WASTED RCVRABL ENERGY (MBTU)	FUEL INPUT COOLING (MBTU)	ELEC INPUT COOLING (MWH)	FUEL INPUT HEATING (MBTU)	ELEC INPUT HEATING (MWH)	FUEL INPUT ELECT (MBTU)	TOTAL FUEL INPUT (MBTU)	TOTAL SITE ENERGY (MBTU)	TOTAL SOURCE ENERGY (MBTU)
JAN	535.1	0.0	740.5	0.0	0.0	0.0	0.0	782.1	249.8	0.0	782.1	3309.5	8365.0
FEB	476.5	0.0	617.6	0.0	0.0	0.0	0.0	693.5	153.3	0.0	693.5	2801.3	7017.5
MAR	315.7	93.4	636.3	0.0	0.0	0.0	9.4	465.9	77.5	0.0	465.9	2637.7	6981.9
APR	169.8	655.1	594.7	0.0	0.0	0.0	55.2	248.3	17.6	0.0	248.3	2277.8	6337.5
MAY	97.7	799.2	556.4	0.0	0.0	0.0	67.3	135.1	8.9	0.0	135.1	2034.0	5832.4
JUN	15.7	2342.1	707.8	0.0	0.0	0.0	170.5	0.8	5.3	0.0	0.8	2416.5	7248.8
JUL	13.5	3556.2	771.4	0.0	0.0	0.0	244.0	0.0	4.7	0.0	0.0	2632.7	7898.8
AUG	13.7	3135.4	762.0	0.0	0.0	0.0	219.6	0.0	4.8	0.0	0.0	2600.5	7802.3
SEP	76.2	1240.5	606.9	0.0	0.0	0.0	97.2	102.5	7.6	0.0	102.5	2173.9	6317.3
OCT	115.4	347.0	527.8	0.0	0.0	0.0	39.8	166.2	12.4	0.0	166.2	1967.7	5571.2
NOV	139.3	174.5	601.9	0.0	0.0	0.0	16.4	202.5	110.9	0.0	202.5	2256.9	6366.4
DEC	312.7	0.0	714.7	0.0	0.0	0.0	0.0	450.3	210.0	0.0	450.3	2889.6	7768.9
TOTAL	2281.4	12343.5	7838.0	0.0	0.0	0.0	919.4	3247.1	862.7	0.0	3247.1	29998.1	83508.1

HEATING LOADS	MBTU SUPPLIED	PCT OF TOTAL LOAD
HW-BOILER	2094.2	91.8
ELEC-DHW-HEATER	187.2	8.2
LOAD SATISFIED	2281.4	100.0
TOTAL LOAD ON PLANT	2281.4	

COOLING LOADS	MBTU SUPPLIED	PCT OF TOTAL LOAD
HERM-CENT-CHLR	12343.5	100.0
LOAD SATISFIED	12343.5	100.0
TOTAL LOAD ON PLANT	12343.5	

ELECTRICAL LOADS	KWH SUPPLIED	PCT OF TOTAL LOAD
ELECTRICITY	7838039.5	100.0
LOAD SATISFIED	7838039.5	100.0
TOTAL LOAD ON PLANT	7838303.5	

STORAGE TANK USE	MBTU STORED	MBTU RETURNED	MBTU LOST	MBTU RESIDUAL
CTANK-STORAGE	4135.8	4134.8	0.87	0.06

TOWER ABOVE DESIGN TEMPERATURE OF 85.F 0 HOURS

SUMMARY OF LOADS MET

TYPE OF LOAD	TOTAL LOAD (MBTU)	LOAD SATISFIED (MBTU)	TOTAL OVERLOAD (MBTU)	PEAK OVERLOAD (MBTU)	HOURS OVERLOADED
HEATING LOADS	2281.4	2281.4	0.000	0.000	0
COOLING LOADS	12343.5	12343.5	57.109	5.354	32
ELECTRICAL LOADS	26751.9	26751.0	0.000	0.000	0

ENERGY TYPE:	ELECTRICITY	NATURAL-GAS
UNITS: MBTU		
CATEGORY OF USE		
AREA LIGHTS	10810.3	0.0
MISC EQUIPMT	3997.2	0.0
SPACE HEAT	2598.6	3247.1
SPACE COOL	2378.6	0.0
HEAT REJECT	419.9	0.0
PUMPS & MISC	468.1	0.0
VENT FANS	5861.1	0.0
DOMHOT WATER	217.3	0.0
TOTAL	26751.1	3247.1

TOTAL SITE ENERGY 29998.22 MBTU 46.9 KBTU/SQFT-YR GROSS-AREA 46.9 KBTU/SQFT-YR NET-AREA
TOTAL SOURCE ENERGY 83508.49 MBTU 130.5 KBTU/SQFT-YR GROSS-AREA 130.5 KBTU/SQFT-YR NET-AREA

PERCENT OF HOURS ANY SYSTEM ZONE OUTSIDE OF THROTTLING RANGE = 3.9
PERCENT OF HOURS ANY PLANT LOAD NOT SATISFIED = 0.4

NOTE: ENERGY IS APPORTIONED HOURLY TO ALL END-USE CATEGORIES.

31-STORY OFFICE BLDG, CHICAGO - LOAD1 RUN 2 VARIABLE AIR VOLUME SYSTEM DOE-2.1E-001 Wed Nov 10 14:35:12 1993EDL RUN 2
ELECTRIC THERMOSTATIC BASEBOARDS WARM-UP CYCLE USES GAS HEAT

REPORT- ES-D ENERGY COST SUMMARY

UTILITY-RATE	RESOURCE	METERS	METERED ENERGY UNITS/YR	TOTAL CHARGE ($)	VIRTUAL RATE ($/UNIT)	RATE USED ALL YEAR?
GAS-RATE	NATURAL-GAS	1 2 3 4 5	32471. THERM	19483.	0.6000	YES
ELEC-RATE	ELECTRICITY	1 2 3 4 5	7838040. KWH	595752.	0.0760	YES
				==========		
				615235.		

ENERGY COST/GROSS BLDG AREA: 0.96
ENERGY COST/NET BLDG AREA: 0.96

31-STORY OFFICE BLDG, CHICAGO - LOAD1 RUN 2 VARIABLE AIR VOLUME SYSTEM DOE-2.1E-001 Wed Nov 10 14:35:12 1993EDL RUN 2
ELECTRIC THERMOSTATIC BASEBOARDS WARM-UP CYCLE USES GAS HEAT
REPORT- ES-E SUMMARY OF UTILITY-RATE: GAS-RATE

UTILITY-RATE: GAS-RATE
RESOURCE: NATURAL-GAS
METERS: 1 2 3 4 5
DEMAND-WINDOW: HOUR
BILLING-DAY: 31
100000. BTU/THERM
RATE-LIMITATION: 0.0000

RATE-QUALIFICATIONS

MIN-ENERGY:	0.0
MAX-ENERGY:	0.0
MIN-DEMAND:	0.0
MAX-DEMAND:	0.0
QUALIFY-RATE:	ALL-MONTHS
USE-MIN-QUAL:	NO

BLOCK-CHARGES

DEMAND-RATCHETS

MIN-MON-RATCHETS

MONTH	METERED ENERGY THERM	BILLING ENERGY THERM	METERED DEMAND THERMS	BILLING DEMAND THERMS	ENERGY CHARGE ($)	DEMAND CHARGE ($)	ENERGY CST ADJ ($)	TAXES ($)	SURCHRG ($)	FIXED CHARGE ($)	MINIMUM CHARGE ($)	VIRTUAL RATE ($/UNIT)	TOTAL CHARGE ($)
JAN	7821	7821	317.9	317.9	4692	0	0	0	0	0	0	0.6000	4692
FEB	6935	6935	320.1	320.1	4161	0	0	0	0	0	0	0.6000	4161
MAR	4659	4659	264.0	264.0	2795	0	0	0	0	0	0	0.6000	2795
APR	2483	2483	46.2	46.2	1490	0	0	0	0	0	0	0.6000	1490
MAY	1351	1351	60.9	60.9	811	0	0	0	0	0	0	0.6000	811
JUN	8	8	4.8	4.8	5	0	0	0	0	0	0	0.6000	5
JUL	0	0	0.0	0.0	0	0	0	0	0	0	0	0.0000	0
AUG	0	0	0.0	0.0	0	0	0	0	0	0	0	0.0000	0
SEP	1025	1025	39.9	39.9	615	0	0	0	0	0	0	0.6000	615
OCT	1662	1662	61.1	61.1	997	0	0	0	0	0	0	0.6000	997
NOV	2025	2025	114.9	114.9	1215	0	0	0	0	0	0	0.6000	1215
DEC	4503	4503	318.2	318.2	2702	0	0	0	0	0	0	0.6000	2702
TOTAL	32471	32471	320.1		19483	0	0	0	0	0		0.6000	19483

REPORT- ES-E SUMMARY OF UTILITY-RATE: ELEC-RATE

UTILITY-RATE: ELEC-RATE

RESOURCE: ELECTRICITY
METERS: 1 2 3 4 5
POWER-FACTOR: 0.80

DEMAND-WINDOW: HOUR
BILLING-DAY: 31
EXCESS-KVAR-FRAC: 0.30

3413. BTU/KWH
RATE-LIMITATION: 0.0000
EXCESS-KVAR-CHG: 0.0000

RATE-QUALIFICATIONS

MIN-ENERGY:	0.0
MAX-ENERGY:	0.0
MIN-DEMAND:	0.0
MAX-DEMAND:	0.0
QUALIFY-RATE:	ALL-MONTHS
USE-MIN-QUAL:	NO

BLOCK-CHARGES

WINTER-OFF-P	WINTER-DEMAND
WINTER-SHOUL	SUMMER-DEMAND
WINTER-ON-P	
SUMMER-OFF-P	
SUMMER-SHOUL	
SUMMER-ON-P	

DEMAND-RATCHETS

MIN-MON-RATCHETS

MONTH	METERED ENERGY KWH	BILLING ENERGY KWH	METERED DEMAND KW	BILLING DEMAND KW	ENERGY CHARGE ($)	DEMAND CHARGE ($)	ENERGY CST ADJ ($)	TAXES ($)	SURCHRG ($)	FIXED CHARGE ($)	MINIMUM CHARGE ($)	VIRTUAL RATE ($/UNIT)	TOTAL CHARGE ($)
JAN	740522	740522	5242.9	5242.9	34144	18759	0	0	0	0	0	0.0714	52903
FEB	617579	617579	4465.4	4465.4	28630	17922	0	0	0	0	0	0.0754	46552
MAR	636339	636339	3775.2	3775.2	29531	14610	0	0	0	0	0	0.0694	44141
APR	594652	594652	3085.4	3085.4	27746	15427	0	0	0	0	0	0.0726	43173
MAY	556384	556384	3257.2	3257.2	29112	14034	0	0	0	0	0	0.0775	43146
JUN	707817	707817	3484.0	3484.0	40840	17714	0	0	0	0	0	0.0827	58554
JUL	771373	771373	3811.1	3811.1	44334	18973	0	0	0	0	0	0.0821	63307
AUG	761952	761952	3648.0	3648.0	43863	17574	0	0	0	0	0	0.0806	61437
SEP	606918	606918	3078.0	3078.0	31462	14911	0	0	0	0	0	0.0764	46373
OCT	527844	527844	2789.8	2789.8	24593	13949	0	0	0	0	0	0.0730	38542
NOV	601948	601948	4896.1	4896.1	28013	17529	0	0	0	0	0	0.0757	45542
DEC	714713	714713	4632.2	4632.2	33203	18879	0	0	0	0	0	0.0729	52082
TOTAL	7838040	7838040	5242.9		395471	200281	0	0	0	0		0.0760	595752

REPORT- ES-F BLOCK-CHARGE AND RATCHET SUMMARY FOR: ELEC-RATE

UTILITY-RATE: ELEC-RATE
RESOURCE: ELECTRICITY
ENERGY-UNITS: KWH
DEMAND-UNITS: KW
DEMAND-WINDOW: HOUR

BLOCK-CHARGES	JAN	FEB	MAR	APR	MAY	JUN	JUL	AUG	SEP	OCT	NOV	DEC	YEAR
WINTER-OFF-P USE: TIME-OF-USE													
METERED ENERGY:	101083	70558	66003	53122	33673	0	0	0	45415	49970	52607	70150	
BILLING ENERGY:	101083	70558	66003	53122	33673	0	0	0	45415	49970	52607	70150	542581
KWH/KW DEMAND:	2404.8	2404.8	2404.8	1532.2	1654.1	0.0	0.0	0.0	1506.2	1567.2	1635.8	2404.8	
ENERGY CHGS($):	4043	2822	2640	2125	1347	0	0	0	1817	1999	2104	2806	21703
WINTER-SHOUL USE: TIME-OF-USE													
METERED ENERGY:	374244	308760	325254	291074	131420	0	0	0	148723	259821	311664	366207	
BILLING ENERGY:	374244	308760	325254	291074	131420	0	0	0	148723	259821	311664	366207	2517167
KWH/KW DEMAND:	5242.9	4465.4	3775.2	2974.2	2612.3	0.0	0.0	0.0	2931.9	2653.2	4896.1	4632.2	
ENERGY CHGS($):	16841	13894	14636	13098	5914	0	0	0	6693	11692	14025	16479	113273
WINTER-ON-P USE: TIME-OF-USE													
METERED ENERGY:	265196	238262	245083	250458	100751	0	0	0	112778	218054	237678	278357	
BILLING ENERGY:	265196	238262	245083	250458	100751	0	0	0	112778	218054	237678	278357	1946618
KWH/KW DEMAND:	3751.9	3584.4	2922.1	3085.4	2303.3	0.0	0.0	0.0	2582.6	2789.8	3505.8	3775.7	
ENERGY CHGS($):	13260	11913	12254	12523	5038	0	0	0	5639	10903	11884	13918	97331
SUMMER-OFF-P USE: TIME-OF-USE													
METERED ENERGY:	0	0	0	0	40643	107781	129078	124020	45544	0	0	0	
BILLING ENERGY:	0	0	0	0	40643	107781	129078	124020	45544	0	0	0	447066
KWH/KW DEMAND:	0.0	0.0	0.0	0.0	2241.4	2865.1	3321.5	3178.9	2135.7	0.0	0.0	0.0	
ENERGY CHGS($):	0	0	0	0	1829	4850	5809	5581	2049	0	0	0	20118
SUMMER-SHOUL USE: TIME-OF-USE													
METERED ENERGY:	0	0	0	0	125871	301229	322381	318381	127532	0	0	0	
BILLING ENERGY:	0	0	0	0	125871	301229	322381	318381	127532	0	0	0	1195393
KWH/KW DEMAND:	0.0	0.0	0.0	0.0	3257.2	3484.0	3811.1	3648.0	3078.0	0.0	0.0	0.0	
ENERGY CHGS($):	0	0	0	0	6923	16568	17731	17511	7014	0	0	0	65747
SUMMER-ON-P USE: TIME-OF-USE													
METERED ENERGY:	0	0	0	0	124028	298808	319915	319553	126927	0	0	0	
BILLING ENERGY:	0	0	0	0	124028	298808	319915	319553	126927	0	0	0	1189231
KWH/KW DEMAND:	0.0	0.0	0.0	0.0	2530.8	2952.3	3162.2	2929.0	2700.4	0.0	0.0	0.0	
ENERGY CHGS($):	0	0	0	0	8062	19423	20794	20771	8250	0	0	0	77300
WINTER-DEMAND USE: TIME-OF-USE													
METERED DEMAND:	3751.9	3584.4	2922.1	3085.4	2303.3	0.0	0.0	0.0	2582.6	2789.8	3505.8	3775.7	
BILLING DEMAND:	3751.9	3584.4	2922.1	3085.4	2530.8	0.0	0.0	0.0	2700.4	2789.8	3505.8	3775.7	
PRORATE FACTOR:	1.0000	1.0000	1.0000	1.0000	0.4545	0.0000	0.0000	0.0000	0.4783	1.0000	1.0000	1.0000	
DEMAND CHGS($):	18759	17922	14610	15427	5752	0	0	0	6457	13949	17529	18879	129284
SUMMER-DEMAND USE: TIME-OF-USE													
METERED DEMAND:	0.0	0.0	0.0	0.0	2530.8	2952.3	3162.2	2929.0	2700.4	0.0	0.0	0.0	
BILLING DEMAND:	0.0	0.0	0.0	0.0	2530.8	2952.3	3162.2	2929.0	2700.4	0.0	0.0	0.0	
PRORATE FACTOR:	0.0000	0.0000	0.0000	0.0000	0.5455	1.0000	1.0000	1.0000	0.5217	0.0000	0.0000	0.0000	
DEMAND CHGS($):	0	0	0	0	8283	17714	18973	17574	8453	0	0	0	70997

TOTAL ENERGY:	740523	617580	636340	594654	556386	707818	771374	761954	606919	527845	601949	714714	7838056
TOTAL CHARGES ($):	52903	46552	44141	43173	43146	58554	63307	61437	46373	38542	45542	52082	595752

S D L P R O C E S S O R I N P U T D A T A

Wed Nov 10 14:35:12 1993SDL RUN 3

```
* 665 *
* 666 *          TITLE     LINE-2 *RUN 3 VARIABLE AIR VOLUME SYSTEM *
* 667 *                    LINE-4 *OA RESET BASEBOARDS *
* 668 *                    LINE-5 *-                   *  ..
* 669 *
* 670 *                 $ HAVC SYSTEM DESCRIPTION
* 671 *
* 672 * $ DESIGN TEMPS  COOLING 76F  HEATING 70F.
* 673 * $ SYSTEM TYPE   A SINGLE VARIABLE AIR VOLUME SYSTEM SERVES THE ENTIRE BUILDING.
* 674 * $               THE SYSTEM HAS A DRY BULB CONTROLLED ECONOMIZER WITH A LIMIT
* 675 * $               TEMPERATURE OF 68F AND THE FANS HAVE A SPEED CONTROLLER. THE VAV
* 676 * $               BOXES HAVE A MINIMUM STOP OF 20%.  BASEBOARD RADIATION IS NOT
* 677 * $               CONTROLLED BY SPACE THERMOSTATS BUT BY A RESET CONTROL THAT
* 678 * $               IS A FUNCTION OF OA TEMP.  THEREFORE THE BASEBOARD IS ACTIVE
* 679 * $               AT NIGHT BUT THE FAN SYSTEM CAN CYCLE ON IF NECESSARY TO HOLD
* 680 * $               THE NIGHT LOW LIMIT SETTING OF 55F.  THE FANS CAN START AS
* 681 * $               EARLY AS 5AM BUT ARE DELAYED AS LONG AS POSSIBLE (I.E., OPTIMUM
* 682 * $               START).  FANS ARE OFF AFTER 6PM AND ON WEEKENDS AND HOLIDAYS.
* 683 *
* 684 * $.              THERE ARE REHEAT COILS IN THE VAV BOXES THAT ARE CONTROLLED BY
* 685 * $               SPACE THERMOSTATS SINCE THE BASEBOARD RADIATION IS SIZED ONLY
* 686 * $               FOR GLASS CONDUCTION.  A HUMIDISTAT CONTROLS THE
* 687 * $               RETURN AIR HUMIDITY AT 25% RH BY ADDING STEAM TO THE AIR. TO
* 688 * $               PREVENT ADDING MOISTURE TO LARGE QUANITIES OF OUTSIDE AIR, WHICH
* 689 * $               IS VERY COSTLY, THE ECONOMIZER DAMPERS ARE CLOSED BELOW OUTSIDE
* 690 * $               AIR TEMPERATURES OF 45F.  THE FREE COOLING CYCLE ON THE CHILLERS
* 691 * $               PROVIDES NECESSARY MECHANICAL COOLING, SINCE OUTSIDE AIR COOLING
* 692 * $               IS LOCKED OUT.
* 693 *
* 694 *          SYSTEMS-REPORT      SUMMARY=(SS-A,SS-D,SS-J) ..
* 695 *
* 696 *          $ SCHEDULES
* 697 *
* 698 *  HRS1         = DAY-SCHEDULE (1,5) (0) (6,7) (-999) (8,18) (1) (19,24) (0)   ..
* 699 *  HRS2         = DAY-SCHEDULE (1,24) (0)   ..
* 700 *  DAYS1        = WEEK-SCHEDULE  (MON,FRI)  HRS1   (WEH)  HRS2    ..
* 701 *  AHU-SCHED    = SCHEDULE THRU DEC 31   DAYS1   ..      $ FANS $
* 702 *
* 703 *  HRSH1        = DAY-SCHEDULE (1,7) (55)  (8,18) (70)  (19,24) (55)  ..
* 704 *  HRSH2        = DAY-SCHEDULE (1,24) (55)   ..
* 705 *  DAYHEAT      = WEEK-SCHEDULE (MON,FRI)   HRSH1   (WEH)   HRSH2   ..
* 706 *  THEAT        = SCHEDULE THRU DEC 31   DAYHEAT   ..     $ HEATING $
* 707 *
* 708 *  HRSC1        = DAY-SCHEDULE  (1,7) (99)  (8,18) (76)  (19,24) (99)   ..
* 709 *  HRSC2        = DAY-SCHEDULE  (1,24) (99)   ..
* 710 *  DAYCOOL      = WEEK-SCHEDULE  (MON,FRI)  HRSC1   (WEH)  HRSC2   ..
* 711 *  TCOOL        = SCHEDULE THRU DEC 31   DAYCOOL   ..     $ COOLING $
* 712 *
* 713 * HEATON        = SCHEDULE THRU DEC 31 (ALL) (1,24) (60)   ..
* 714 *
* 715 * SAT-FOA       = SCHEDULE THRU DEC 31 (ALL) SA1  ..
* 716 * SA1           = DAY-RESET-SCH  SUPPLY-HI 65   SUPPLY-LO 55
* 717 *                                OUTSIDE-LO 20  OUTSIDE-HI 75  ..
* 718 *
* 719 *  BASEB        = RESET-SCHEDULE  THRU MAR 15  (ALL)  BASE1
```

```
* 720 *                                THRU DEC 15  (ALL)  BASE2
* 721 *                                THRU DEC 31  (ALL)  BASE3  ..
* 722 *
* 723 *  BASE1        = DAY-RESET-SCH OUTSIDE-HI = 60  OUTSIDE-LO = 0
* 724 *                               SUPPLY-HI  =  1  SUPPLY-LO  = 0    ..
* 725 *  BASE2        = DAY-RESET-SCH OUTSIDE-HI = 60  OUTSIDE-LO = 0
* 726 *                               SUPPLY-HI  =  0  SUPPLY-LO  =  0  ..
* 727 *  BASE3        = DAY-RESET-SCH OUTSIDE-HI = 60  OUTSIDE-LO = 0
* 728 *                               SUPPLY-HI  =  1  SUPPLY-LO  =  0  ..
* 729 *
* 730 *
* 731 *          $ ZONE SUB-COMMANDS
* 732 *
* 733 *  ZAIR          = ZONE-AIR      OA-CFM/PER=20   ..
* 734 *
* 735 *  CONTROL      = ZONE-CONTROL  DESIGN-HEAT-T=70  DESIGN-COOL-T=74
* 736 *                               HEAT-TEMP-SCH=THEAT  COOL-TEMP-SCH=TCOOL
* 737 *                               BASEBOARD-CTRL=OUTDOOR-RESET
* 738 *                               THERMOSTAT-TYPE=REVERSE-ACTION  ..
* 739 *
* 740 *          $ ZONE DESCRIPTION
* 741 *
* 742 * RZ1      = ZONE      ZONE-AIR=ZAIR  ZONE-CONTROL=CONTROL  CFM/SQFT=.9
* 743 *                      BASEBOARD-RATING=-50000  ..
* 744 * RZ2      = ZONE  LIKE RZ1  BASEBOARD-RATING=-50000  ..
* 745 * RZ3      = ZONE  LIKE RZ2  B-R -25000  ..
* 746 * RZ4      = ZONE  LIKE RZ2  ..
* 747 * RZ5      = ZONE  LIKE RZ3  ..
* 748 * TZ1      = ZONE  LIKE RZ1  ..
* 749 * TZ2      = ZONE  LIKE RZ2  ..
* 750 * TZ3      = ZONE  LIKE RZ3  ..
* 751 * TZ4      = ZONE  LIKE TZ2  ..
* 752 * TZ5      = ZONE  LIKE TZ3  ..
* 753 * A-STORAGE= ZONE  LIKE RZ1     AIR-CHANGES/HR=4  OA-CHANGES=0.5  ..
* 754 *
* 755 *          $ SYSTEM SUB-COMMANDS
* 756 *
* 757 *  S-CTRL  = SYSTEM-CONTROL     HEATING-SCHEDULE=HEATON
* 758 *                               BASEBOARD-SCH=BASEB  HEAT-SET-T=60
* 759 *                               COOL-CONTROL=RESET  COOL-RESET-SCH=SAT-FOA
* 760 *                               MIN-SUPPLY-T=55   MAX-SUPPLY-T=105
* 761 *                               MIN-HUMIDITY=25  ..
* 762 *
* 763 *  S-FAN   = SYSTEM-FANS        FAN-SCHEDULE=AHU-SCHED  FAN-CONTROL=SPEED
* 764 *                               SUPPLY-STATIC=5.5  SUPPLY-EFF=0.54
* 765 *                               RETURN-STATIC=2.0  RETURN-EFF=0.51  ..
* 766 *
* 767 *  S-TERM  = SYSTEM-TERMINAL    REHEAT-DELTA-T=50  MIN-CFM-RATIO=0.2 ..
* 768 *
* 769 *          $ SYSTEM DESCRIPTION
* 770 *
* 771 *  VARVOL  = SYSTEM             SYSTEM-TYPE=VAVS  SYSTEM-CONTROL=S-CTRL
* 772 *                               SYSTEM-FANS=S-FAN   ECONO-LOW-LIMIT 45
* 773 *                               SYSTEM-TERMINAL=S-TERM  RETURN-AIR-PATH=DUCT
* 774 *                               ECONO-LIMIT-T=68  ZONE-NAMES=(RZ1,RZ2,RZ3,
* 775 *                                RZ4,RZ5,TZ1,TZ2,TZ3,TZ4,TZ5) ..
* 776 *
* 777 * BASMT-SYS = SYSTEM            SYSTEM-TYPE=SZRH  MAX-S-T=105  MIN-S-T=55
* 778 *                               SUPPLY-STATIC=2.5  S-E=.5  F-SCH=AHU-SCHED
* 779 *                               H-SCH=HEATON
* 780 *                               ZONE-NAMES=(A-STORAGE)  ..
* 781 *
* 782 * PLANT1  = PLANT-ASSIGNMENT  SYSTEM-NAMES = (VARVOL,BASMT-SYS)
```

```
* 783 *                                INT-ELEC-KW = 100  $ FOR ELEVATORS
* 784 *                                INT-ELEC-SCH = OCCUP
* 785 *                                DHW-SIZE=0
* 786 *                                DHW-GAL/MIN  = 2.22
* 787 *                                DHW-SCH      = OCCUP  ..
* 788 *
* 789 * OC1          =DAY-SCHEDULE        (1,8) (0.)          (9,10) (1.)
* 790 *                                  (11,13) (.8,.4,.8)  (14,24) (1.,1.,1.,
* 791 *                                                  .3,.1,.1,.1,0.,0.,0.,0.)  ..
* 792 * OC2          =DAY-SCHEDULE        (1,24) (0.0)  ..
* 793 * PEOPLE       =WEEK-SCHEDULE       (MON,FRI)  OC1      (WEH)  OC2  ..
* 794 * OCCUP        =SCHEDULE            THRU DEC 31  PEOPLE   ..
* 795 * END   ..
* 796 * COMPUTE SYSTEMS   ..
* 797 *
* 798 * INPUT PLANT  ..
```

```
* 799 * PLANT1 = PLANT-ASSIGNMENT  ..
* 800 *
* 801 *          PLANT-REPORT        SUMMARY=(PS-A,BEPS) ..
* 802 *
* 803 *          $ PLANT DESCRIPTION
* 804 *
* 805 * $ THIS PLANT IS TYPICAL OF THOSE IN LARGE CITIES
* 806 * $ LIKE NEW YORK WHERE THE UTILITY
* 807 * $ FURNISHES STEAM TO THE BUILDING, AND, AS IN MANY OLDER BUILDINGS,
* 808 * $ THE PLANT HAS AN ABSORPTION CHILLER.
* 809 * $ THE INPUT DEMONSTRATES THE USE OF THE ABSORPTION CHILLER
* 810 * $ AS AN ELECTRIC PEAK SHAVING DEVICE THAT TRIES TO HOLD THE ELECTRIC DEMAND
* 811 * $ BELOW 10 MBTUH OR 2930KW.
* 812 *
* 813 * CMPC     =PLANT-EQUIPMENT     TYPE=HERM-CENT-CHLR  SIZE=12.5  I-N=2 ..
* 814 *
* 815 * ABSC     =PLANT-EQUIPMENT   TYPE=ABSOR1-CHLR  SIZE=12.5  I-N=1  ..
* 816 *
* 817 * NORMAL-OP =LOAD-ASSIGNMENT  TYPE=COOLING  LOAD-RANGE=25  P-E=CMPC  N=2  ..
* 818 *
* 819 * PEAK-OP   =LOAD-ASSIGNMENT  TYPE=COOLING  L-R=25
* 820 *                            P-E=ABSC  N=1
* 821 *                            P-E=CMPC  N=1  ..
* 822 *
* 823 * LOAD-MANAGEMENT  HEAT-MULTIPLIER=0  COOL-MULTIPLIER=.27
* 824 *                 ELEC-MULTIPLIER=1
* 825 *                 PRED-LOAD-RANGE=10
* 826 *                 LOAD-ASSIGNMENT=(DEFAULT,NORMAL-OP,DEFAULT)
* 827 *                 PRED-LOAD-RANGE=999
* 828 *                 LOAD-ASSIGNMENT=(DEFAULT,PEAK-OP,DEFAULT)  ..
* 829 *
* 830 * CTOWER   =PLANT-EQUIPMENT     TYPE=COOLING-TWR  SIZE=-999 ..
* 831 *
* 832 *          $ ENERGY COST DESCRIPTION
* 833 *
* 834 * ENERGY-RESOURCE  RESOURCE=STEAM  ENERGY/UNIT=1000000
* 835 *                 SOURCE-SITE-EFF=.6  UNIT-NAME = MBTU  ..
* 836 *
* 837 * ENERGY-RESOURCE  RESOURCE=ELECTRICITY  ..
* 838 *
* 839 * END  ..
* 840 * COMPUTE PLANT  ..
* 841 * INPUT ECONOMICS  ..
```

```
* 842 *
* 843 * ECONOMICS-REPORT  S=(ES-D,ES-E,ES-F)  ..
* 844 *
* 845 *                    $   ENERGY CHARGE DESCRIPTION
* 846 *
* 847 * $ THE ELECTRICITY RATE HAS A TIME-OF-DAY SCHEDULE WITH A 12 DOLLARS/KW DEMAND
* 848 * $ CHARGE IN WINTER AND A 15 DOLLARS/KW CHARGE IN SUMMER.  IT IS ASSUMED THAT
* 849 * $ THERE IS A SINGLE DEMAND METER AND THAT THE PEAK DEMAND OCCURS DURING
* 850 * $ THE ON-PEAK PERIOD.  THERE IS ALSO A RATCHET OF 90% ON THE HIGHEST SUMMER
* 851 * $ PEAK DEMAND AND THE KWH/KW CHARGE IS BASED ON THE BILLING DEMAND RATHER THAN
* 852 * $ THE RECORDED OR MEASURED DEMAND.
* 853 *
* 854 * $ FOR STEAM THERE IS A STRAIGHT UNIFORM CHARGE OF 10 DOLLARS/MBTU.
* 855 * $ HOWEVER THERE IS A MINIMUM MONTHLY CHARGE OF 1000 DOLLARS WHICH APPROXIMATELY
* 856 * $ COVERS THE DOMESTIC HOT WATER USE.
* 857 *
* 858 * STEAM-CHG = UTILITY-RATE   RESOURCE=STEAM   ENERGY-CHG=10.00
* 859 *                            MIN-MON-CHGS=(1000)  ..
* 860 *
* 861 * ELEC-RATE = UTILITY-RATE   RESOURCE = ELECTRICITY
* 862 *                            BLOCK-CHARGES = (WINTER-OFF-P,WINTER-SHOUL,
* 863 *                                             WINTER-ON-P,SUMMER-OFF-P,
* 864 *                                             SUMMER-SHOUL,SUMMER-ON-P,
* 865 *                                             WINTER-DEMAND,SUMMER-DEMAND)
* 866 *                            DEMAND-RATCHETS = (SUMMER-RATCH)  ..
* 867 *
* 868 * WINTER-OFF-P = BLOCK-CHARGE  BLOCK-SCH = SEASONS-SCH
* 869 *                             SCH-FLAG  = 1
* 870 *                             BLOCK1-TYPE = KWH/KW
* 871 *                             BLOCK1-DATA = (200,.04,0
* 872 *                                            800,.05,0)  ..
* 873 * WINTER-SHOUL = BLOCK-CHARGE  BLOCK-SCH = SEASONS-SCH
* 874 *                             SCH-FLAG  = 2
* 875 *                             BLOCK1-TYPE = KWH/KW
* 876 *                             BLOCK1-DATA = (200,.045,0
* 877 *                                            800,.055,0)  ..
* 878 * WINTER-ON-P  = BLOCK-CHARGE  BLOCK-SCH = SEASONS-SCH
* 879 *                             SCH-FLAG  = 3
* 880 *                             BLOCK1-TYPE = KWH/KW
* 881 *                             BLOCK1-DATA = (200,.05,0
* 882 *                                            800,.06,0)  ..
* 883 * WINTER-DEMAND = BLOCK-CHARGE BLOCK-SCH = SEASONS-SCH
* 884 *                             TOU-SEASON-LINKS = (SUMMER-DEMAND)
* 885 *                             SCH-FLAG  = 3
* 886 *                             BLOCK1-TYPE = DEMAND
* 887 *                             BLOCK1-DATA = (1,12.00)  ..
* 888 *
* 889 * SUMMER-OFF-P = BLOCK-CHARGE  BLOCK-SCH = SEASONS-SCH
* 890 *                             SCH-FLAG  = 4
* 891 *                             BLOCK1-TYPE = KWH/KW
* 892 *                             BLOCK1-DATA = (175,.045,0
* 893 *                                            800,.055,0)  ..
* 894 * SUMMER-SHOUL = BLOCK-CHARGE  BLOCK-SCH = SEASONS-SCH
* 895 *                             SCH-FLAG  = 5
* 896 *                             BLOCK1-TYPE = KWH/KW
```

```
* 897 *                                BLOCK1-DATA = (175,.055,0
* 898 *                                              800,.065,0)  ..
* 899 * SUMMER-ON-P  = BLOCK-CHARGE  BLOCK-SCH = SEASONS-SCH
* 900 *                              SCH-FLAG  = 6
* 901 *                              BLOCK1-TYPE = KWH/KW
* 902 *                              BLOCK1-DATA = (175,.065,0
* 903 *                                              800,.075,0)  ..
* 904 * SUMMER-DEMAND = BLOCK-CHARGE BLOCK-SCH = SEASONS-SCH
* 905 *                              TOU-SEASON-LINKS = (WINTER-DEMAND)
* 906 *                              SCH-FLAG  = 6
* 907 *                              BLOCK1-TYPE = DEMAND
* 908 *                              BLOCK1-DATA = (1,15.00)  ..
* 909 *
* 910 * SUMMER-RATCH = RATCHET       RATCHET-SCH = SUM-RAT-SCH
* 911 *                              SCH-FLAG    = 1
* 912 *                              NUM-MONTHS  = 12
* 913 *                              FRACTION    = .90  ..
* 914 *
* 915 * SUM-RAT-SCH  = SCHEDULE      THRU MAY 15 (ALL)(1,24)(0)
* 916 *                              THRU SEP 15 (ALL)(1,24)(1)
* 917 *                              THRU DEC 31 (ALL)(1,24)(0)  ..
* 918 *
* 919 * SEASONS-SCH  SCHEDULE  THRU MAY 15 (WD) (1,8)(1) (9,12)(2) (13,17)(3)
* 920 *                                      (18,22)(2) (23,24)(1)
* 921 *                                 (WEH) (1,8)(1)  (9,24)(2)
* 922 *                        THRU SEP 15 (WD) (1,8)(4) (9,12)(5) (13,18)(6)
* 923 *                                      (19,24)(5)
* 924 *                                 (WEH) (1,8)(4) (9,24)(5)
* 925 *                        THRU DEC 31 (WD) (1,8)(1) (9,12)(2) (13,17)(3)
* 926 *                                      (18,22)(2) (23,24)(1)
* 927 *                                 (WEH) (1,8)(1)  (9,24)(2)   ..
* 928 * END  ..
* 929 * COMPUTE ECONOMICS  ..
* 930 *
* 931 * INPUT LOADS   ..
```

SYSTEM NAME	SYSTEM TYPE	ALTITUDE MULTIPLIER	FLOOR AREA (SQFT)	MAX PEOPLE
VARVOL	VAVS	1.020	620000.0	4402.

SUPPLY FAN (CFM)	ELEC (KW)	DELTA-T (F)	RETURN FAN (CFM)	ELEC (KW)	DELTA-T (F)	OUTSIDE AIR RATIO	COOLING CAPACITY (KBTU/HR)	SENSIBLE (SHR)	HEATING CAPACITY (KBTU/HR)	COOLING EIR (BTU/BTU)	HEATING EIR (BTU/BTU)
811481.	951.060	3.7	811481.	366.183	1.4	0.111	31849.852	0.674	0.000	0.00	0.37

ZONE NAME	SUPPLY FLOW (CFM)	EXHAUST FLOW (CFM)	FAN (KW)	MINIMUM FLOW RATIO	OUTSIDE AIR FLOW (CFM)	COOLING CAPACITY (KBTU/HR)	SENSIBLE (SHR)	EXTRACTION RATE (KBTU/HR)	HEATING CAPACITY (KBTU/HR)	ADDITION RATE (KBTU/HR)	MULTIPLIER
RZ1	10924.	0.	0.000	0.200	1224.	0.00	0.00	224.16	-589.91	-462.93	1.0
RZ2	5391.	0.	0.000	0.200	571.	0.00	0.00	110.63	-291.12	-253.78	1.0
RZ3	1672.	0.	0.000	0.200	265.	0.00	0.00	34.31	-90.28	-88.19	1.0
RZ4	5348.	0.	0.000	0.200	571.	0.00	0.00	109.74	-288.78	-252.14	1.0
RZ5	2336.	0.	0.000	0.200	265.	0.00	0.00	47.93	-126.13	-113.29	1.0
TZ1	10924.	0.	0.000	0.200	1224.	0.00	0.00	224.16	-589.91	-462.93	30.0
TZ2	5418.	0.	0.000	0.200	571.	0.00	0.00	111.18	-292.57	-254.80	30.0
TZ3	1627.	0.	0.000	0.200	265.	0.00	0.00	33.39	-87.88	-86.52	30.0
TZ4	5785.	0.	0.000	0.200	571.	0.00	0.00	118.70	-312.37	-268.66	30.0
TZ5	2440.	0.	0.000	0.200	265.	0.00	0.00	50.06	-131.73	-117.21	30.0

REPORT- SV-A SYSTEM DESIGN PARAMETERS BASMT-SYS WEATHER FILE- TRY CHICAGO

SYSTEM NAME	SYSTEM TYPE	ALTITUDE MULTIPLIER	FLOOR AREA (SQFT)	MAX PEOPLE
BASMT-SYS	SZRH	1.020	20000.0	0.

SUPPLY FAN (CFM)	ELEC (KW)	DELTA-T (F)	RETURN FAN (CFM)	ELEC (KW)	DELTA-T (F)	OUTSIDE AIR RATIO	COOLING CAPACITY (KBTU/HR)	SENSIBLE (SHR)	HEATING CAPACITY (KBTU/HR)	COOLING EIR (BTU/BTU)	HEATING EIR (BTU/BTU)
27200.	15.649	1.8	0.	0.000	0.0	0.125	948.825	0.721	-1227.298	0.00	0.37

ZONE NAME	SUPPLY FLOW (CFM)	EXHAUST FLOW (CFM)	FAN (KW)	MINIMUM FLOW RATIO	OUTSIDE AIR FLOW (CFM)	COOLING CAPACITY (KBTU/HR)	SENSIBLE (SHR)	EXTRACTION RATE (KBTU/HR)	HEATING CAPACITY (KBTU/HR)	ADDITION RATE (KBTU/HR)	MULTIPLIER
A-STORAGE	27200.	0.	0.000	1.000	3400.	0.00	0.00	558.14	0.00	-1078.16	1.0

31-STORY OFFICE BLDG, CHICAGO - LOAD1 RUN 3 VARIABLE AIR VOLUME SYSTEM DOE-2.1E-001 Wed Nov 10 14:35:12 1993SDL RUN 3
OA RESET BASEBOARDS
REPORT- SS-D PLANT MONTHLY LOADS SUMMARY FOR PLANT1 WEATHER FILE- TRY CHICAGO

	COOLING						HEATING						ELEC	
MONTH	COOLING ENERGY (MBTU)	TIME OF MAX DY	TIME OF MAX HR	DRY-BULB TEMP	WET-BULB TEMP	MAXIMUM COOLING LOAD (KBTU/HR)	HEATING ENERGY (MBTU)	TIME OF MAX DY	TIME OF MAX HR	DRY-BULB TEMP	WET-BULB TEMP	MAXIMUM HEATING LOAD (KBTU/HR)	ELEC-TRICAL ENERGY (KWH)	MAXIMUM ELEC LOAD (KW)
JAN	836.90778	4	7	2.F	2.F	12960.485	-2872.071	12	7	-6.F	-7.F	-10944.467	458628.	2737.903
FEB	767.65100	9	16	23.F	19.F	8112.404	-2484.821	9	7	2.F	2.F	-8627.833	432833.	2439.711
MAR	379.99835	3	15	76.F	65.F	9294.560	-1041.017	24	7	6.F	5.F	-17061.723	449798.	2047.118
APR	590.44543	28	15	78.F	68.F	12429.391	-130.508	8	7	32.F	29.F	-7332.346	424922.	1839.387
MAY	587.58905	21	14	85.F	75.F	16181.095	-46.335	10	7	41.F	39.F	-2942.354	407028.	2030.905
JUN	2132.48633	21	16	82.F	72.F	19492.824	0.000					0.000	477973.	2274.687
JUL	3399.83398	19	7	78.F	72.F	24591.713	0.000					0.000	489093.	2516.045
AUG	2978.57129	16	7	73.F	68.F	21840.842	0.000					0.000	490204.	2291.614
SEP	995.00549	10	16	82.F	70.F	14546.001	-30.382	22	8	34.F	31.F	-2248.202	421892.	1914.044
OCT	295.05307	5	16	74.F	62.F	9229.723	-81.396	21	7	30.F	29.F	-5844.290	382512.	1705.445
NOV	139.13741	2	16	77.F	62.F	9285.938	-536.348	15	7	27.F	25.F	-23077.816	382983.	1737.591
DEC	215.86208	30	16	38.F	33.F	4538.136	-1795.730	13	7	34.F	33.F	-18403.383	412222.	1888.473
TOTAL	13318.555						-9018.632						5230078.	
MAX						24591.713						-23077.816		2737.903

MAXIMUM DAILY INTEGRATED COOLING LOAD (DES DAY) 0.000 (KBTU)
MAXIMUM DAILY INTEGRATED COOLING LOAD (WTH FILE) 250185.616 (KBTU)

REPORT- SS-A SYSTEM MONTHLY LOADS SUMMARY FOR VARVOL WEATHER FILE- TRY CHICAGO

	COOLING						HEATING						ELEC	
MONTH	COOLING ENERGY (MBTU)	TIME OF MAX DY	TIME OF MAX HR	DRY-BULB TEMP	WET-BULB TEMP	MAXIMUM COOLING LOAD (KBTU/HR)	HEATING ENERGY (MBTU)	TIME OF MAX DY	TIME OF MAX HR	DRY-BULB TEMP	WET-BULB TEMP	MAXIMUM HEATING LOAD (KBTU/HR)	ELEC-TRICAL ENERGY (KWH)	MAXIMUM ELEC LOAD (KW)
JAN	836.90778	4	7	2.F	2.F	12960.485	-2838.256	12	7	-6.F	-7.F	-10627.519	431857.	2653.753
FEB	767.65100	9	16	23.F	19.F	8112.404	-2453.258	9	7	2.F	2.F	-8329.184	407428.	2297.062
MAR	379.99835	3	15	76.F	65.F	9294.560	-1017.361	24	7	6.F	5.F	-16817.875	419175.	1962.968
APR	590.44543	28	15	78.F	68.F	12429.391	-124.739	8	7	32.F	29.F	-7332.346	395733.	1739.786
MAY	586.51184	21	14	85.F	75.F	16023.778	-46.309	10	7	41.F	39.F	-2942.354	380429.	1946.756
JUN	2123.28296	21	16	82.F	72.F	19347.477	0.000					0.000	448861.	2190.538
JUL	3367.74121	19	7	78.F	72.F	24591.713	0.000					0.000	461220.	2431.895
AUG	2953.61230	16	7	73.F	68.F	21840.842	0.000					0.000	461057.	2207.464
SEP	989.21368	10	16	82.F	70.F	14354.195	-30.359	22	8	34.F	31.F	-2234.634	394055.	1829.895
OCT	294.33704	5	16	74.F	62.F	9160.113	-81.363	21	7	30.F	29.F	-5844.290	355913.	1606.422
NOV	138.83478	2	16	77.F	62.F	9200.800	-531.762	15	7	27.F	25.F	-23077.816	356405.	1653.442
DEC	215.86208	30	16	38.F	33.F	4538.136	-1776.498	13	7	34.F	33.F	-18211.879	384270.	1804.324
TOTAL	13244.418						-8899.935						4896432.	
MAX						24591.713						-23077.816		2653.753

	-----COOLING-----				---HEATING---			DAY COOLING PEAK			
	JUL 19				NOV 15			JUL 19			
HOUR	HOURLY COOLING LOAD (KBTU)	SENSIBLE HEAT RATIO	DRY-BULB TEMP	WET-BULB TEMP	HOURLY HEATING LOAD (KBTU)	DRY-BULB TEMP	WET-BULB TEMP	HOURLY COOLING LOAD (KBTU)	SENSIBLE HEAT RATIO	DRY-BULB TEMP	WET-BULB TEMP
1	0.000	0.000	79.F	72.F	0.000	27.F	25.F	0.000	0.000	79.F	72.F
2	0.000	0.000	79.F	72.F	0.000	26.F	25.F	0.000	0.000	79.F	72.F
3	0.000	0.000	78.F	72.F	0.000	26.F	25.F	0.000	0.000	78.F	72.F
4	0.000	0.000	78.F	72.F	0.000	26.F	25.F	0.000	0.000	78.F	72.F
5	0.000	0.000	77.F	72.F	0.000	27.F	26.F	0.000	0.000	77.F	72.F
6	24591.713	0.866	78.F	72.F	0.000	28.F	26.F	24591.713	0.866	78.F	72.F
7	20563.613	0.851	77.F	72.F	-23077.816	27.F	25.F	20563.613	0.851	77.F	72.F
8	21868.527	0.837	79.F	72.F	-15235.086	27.F	26.F	21868.527	0.837	79.F	72.F
9	21041.549	0.849	82.F	72.F	-11490.358	28.F	26.F	21041.549	0.849	82.F	72.F
10	20986.748	0.852	85.F	73.F	-9513.255	30.F	27.F	20986.748	0.852	85.F	73.F
11	21172.213	0.862	88.F	74.F	-8267.069	32.F	29.F	21172.213	0.862	88.F	74.F
12	20188.467	0.851	89.F	74.F	-6747.712	33.F	29.F	20188.467	0.851	89.F	74.F
13	20722.068	0.834	90.F	75.F	-5353.481	35.F	31.F	20722.068	0.834	90.F	75.F
14	20729.994	0.829	89.F	75.F	-3618.465	36.F	32.F	20729.994	0.829	89.F	75.F
15	21066.977	0.835	90.F	75.F	-2708.287	37.F	32.F	21066.977	0.835	90.F	75.F
16	18315.027	0.834	91.F	76.F	-2090.126	37.F	32.F	18315.027	0.834	91.F	76.F
17	16698.906	0.839	90.F	75.F	-3654.365	35.F	31.F	16698.906	0.839	90.F	75.F
18	0.000	0.000	86.F	74.F	-4389.135	33.F	30.F	0.000	0.000	86.F	74.F
19	0.000	0.000	86.F	74.F	0.000	33.F	29.F	0.000	0.000	86.F	74.F
20	0.000	0.000	80.F	72.F	0.000	32.F	30.F	0.000	0.000	80.F	72.F
21	0.000	0.000	79.F	72.F	0.000	32.F	29.F	0.000	0.000	79.F	72.F
22	0.000	0.000	77.F	71.F	0.000	31.F	29.F	0.000	0.000	77.F	71.F
23	0.000	0.000	76.F	71.F	0.000	29.F	28.F	0.000	0.000	76.F	71.F
24	0.000	0.000	74.F	70.F	0.000	27.F	26.F	0.000	0.000	74.F	70.F
	---				---			---			
SUM								247945.797			
MAX	24591.713				-23077.816						

SYSTEM-TYPE	VAVS	SQFT/TON	302.5
COOLING PEAK	39.66 (BTU/HR- SQFT)	HEATING PEAK	-37.22 (BTU/HR- SQFT)
SUPPLY AIR PEAK FLOW	1.31 (CFM/SQFT)	MIN-OA/PERSON	20.40 (CFM)
OA FRAC AT CLG PEAK	0.131	OA FRAC AT HTG PEAK	0.220

* ASTERISKS INDICATE HOURS LOADS NOT MET

	COOLING						HEATING						ELEC	
MONTH	COOLING ENERGY (MBTU)	TIME OF MAX DY	TIME OF MAX HR	DRY-BULB TEMP	WET-BULB TEMP	MAXIMUM COOLING LOAD (KBTU/HR)	HEATING ENERGY (MBTU)	TIME OF MAX DY	TIME OF MAX HR	DRY-BULB TEMP	WET-BULB TEMP	MAXIMUM HEATING LOAD (KBTU/HR)	ELEC-TRICAL ENERGY (KWH)	MAXIMUM ELEC LOAD (KW)
JAN	0.00000					0.000	-33.813	4	7	2.F	2.F	-587.425	11571.	44.149
FEB	0.00000					0.000	-31.562	8	7	5.F	5.F	-355.787	10965.	44.149
MAR	0.00000					0.000	-23.656	1	7	28.F	26.F	-270.999	13145.	44.149
APR	0.00000					0.000	-5.769	19	7	38.F	36.F	-177.284	12469.	44.149
MAY	1.07714	21	13	87.F	76.F	167.358	-0.026	10	8	42.F	40.F	-20.263	11399.	44.149
JUN	9.20262	9	15	83.F	73.F	187.044	0.000					0.000	12391.	44.149
JUL	32.09126	13	17	97.F	78.F	279.431	0.000					0.000	11913.	44.149
AUG	24.95892	26	17	94.F	76.F	271.527	0.000					0.000	12427.	44.149
SEP	5.79182	10	17	83.F	70.F	196.117	-0.023	22	8	34.F	31.F	-13.569	11877.	44.149
OCT	0.71604	4	17	78.F	61.F	88.591	-0.034	1	8	33.F	32.F	-14.381	11399.	44.149
NOV	0.30262	2	16	77.F	62.F	85.139	-4.586	29	7	28.F	27.F	-173.835	11379.	44.149
DEC	0.00000					0.000	-19.233	27	7	31.F	30.F	-246.132	11991.	44.149
TOTAL	74.140						-118.701						142926.	
MAX						279.431						-587.425		44.149

	-----COOLING-----				---HEATING---			DAY COOLING PEAK			
	JUL 13				JAN 4			JUL 9			
HOUR	HOURLY COOLING LOAD (KBTU)	SENSIBLE HEAT RATIO	DRY-BULB TEMP	WET-BULB TEMP	HOURLY HEATING LOAD (KBTU)	DRY-BULB TEMP	WET-BULB TEMP	HOURLY COOLING LOAD (KBTU)	SENSIBLE HEAT RATIO	DRY-BULB TEMP	WET-BULB TEMP
1	0.000	0.000	76.F	66.F	0.000	6.F	6.F	0.000	0.000	78.F	68.F
2	0.000	0.000	74.F	66.F	0.000	5.F	5.F	0.000	0.000	76.F	68.F
3	0.000	0.000	74.F	65.F	0.000	4.F	4.F	0.000	0.000	75.F	68.F
4	0.000	0.000	73.F	62.F	0.000	4.F	4.F	0.000	0.000	73.F	67.F
5	0.000	0.000	72.F	62.F	0.000	3.F	3.F	0.000	0.000	72.F	66.F
6	0.000	0.000	72.F	63.F	0.000	3.F	3.F	0.000	0.000	71.F	65.F
7	59.228	0.651	73.F	65.F	-587.425	2.F	2.F	187.372	0.550	75.F	68.F
8	161.139	0.710	76.F	69.F	-513.253	2.F	2.F	172.458	0.750	77.F	69.F
9	197.922	0.696	82.F	72.F	-491.286	4.F	3.F	212.123	0.706	82.F	72.F
10	221.865	0.685	86.F	74.F	-458.140	7.F	6.F	234.339	0.683	85.F	74.F
11	244.745	0.666	89.F	76.F	-424.878	11.F	9.F	246.907	0.689	88.F	75.F
12	263.139	0.647	93.F	78.F	-389.119	16.F	13.F	252.316	0.687	91.F	76.F
13	264.223	0.670	95.F	78.F	-372.755	18.F	15.F	242.635	0.727	92.F	75.F
14	260.045	0.713	96.F	77.F	-349.616	20.F	16.F	217.321	0.816	91.F	72.F
15	263.266	0.720	97.F	77.F	-330.303	20.F	16.F	244.990	0.770	94.F	74.F
16	279.431	0.692	97.F	78.F	-316.387	20.F	16.F	236.845	0.819	95.F	73.F
17	261.879	0.737	99.F	77.F	-304.399	19.F	15.F	232.436	0.835	97.F	73.F
18	0.000	0.000	97.F	76.F	-310.097	16.F	13.F	0.000	0.000	96.F	73.F
19	0.000	0.000	95.F	75.F	0.000	13.F	11.F	0.000	0.000	94.F	73.F
20	0.000	0.000	93.F	75.F	0.000	11.F	9.F	0.000	0.000	84.F	70.F
21	0.000	0.000	90.F	74.F	0.000	10.F	8.F	0.000	0.000	78.F	70.F
22	0.000	0.000	87.F	73.F	0.000	11.F	9.F	0.000	0.000	76.F	71.F
23	0.000	0.000	86.F	73.F	0.000	7.F	6.F	0.000	0.000	70.F	67.F
24	0.000	0.000	85.F	73.F	0.000	6.F	5.F	0.000	0.000	70.F	67.F
	--------				--------			---------			
SUM								2479.743			
MAX	279.431				-587.425						

SYSTEM-TYPE SZRH SQFT/TON 858.9
COOLING PEAK 13.97 (BTU/HR- SQFT) HEATING PEAK -29.37 (BTU/HR- SQFT)
SUPPLY AIR PEAK FLOW 1.36 (CFM/SQFT)
OA FRAC AT CLG PEAK 0.125 OA FRAC AT HTG PEAK 0.125

* ASTERISKS INDICATE HOURS LOADS NOT MET

EQUIPMENT	SIZE (MBTU/H)	NUMBER INSTD	NUMBER AVAIL	SIZE (MBTU/H)	NUMBER INSTD	NUMBER AVAIL	SIZE (MBTU/H)	NUMBER INSTD	NUMBER AVAIL	SIZE (MBTU/H)	NUMBER INSTD	NUMBER AVAIL	SIZE (MBTU/H)	NUMBER INSTD	NUMBER AVAIL	SIZE (MBTU/H)	NUMBER INSTD	NUMBER AVAIL
HERM-CENT-CHLR	12.500	2	2															
ABSOR1-CHLR	12.500	1	1															
COOLING-TWR	12.611	5	5															

31-STORY OFFICE BLDG, CHICAGO - LOAD1 RUN 3 VARIABLE AIR VOLUME SYSTEM DOE-2.1E-001 Wed Nov 10 14:35:12 1993PDL RUN 3
OA RESET BASEBOARDS
REPORT- PS-A PLANT ENERGY UTILIZATION SUMMARY WEATHER FILE- TRY CHICAGO

	SITE ENERGY												SOURCE
	2	3	4	5	6	7	8	9	10	11	12	13	14
MONTH	TOTAL HEAT LOAD (MBTU)	TOTAL COOLING LOAD (MBTU)	TOTAL ELECTR LOAD (MWH)	RCVRED ENERGY (MBTU)	WASTED RCVRABL ENERGY (MBTU)	FUEL INPUT COOLING (MBTU)	ELEC INPUT COOLING (MWH)	FUEL INPUT HEATING (MBTU)	ELEC INPUT HEATING (MWH)	FUEL INPUT ELECT (MBTU)	TOTAL FUEL INPUT (MBTU)	TOTAL SITE ENERGY (MBTU)	TOTAL SOURCE ENERGY (MBTU)
JAN	3244.4	947.1	562.5	0.0	0.0	241.0	85.2	3003.3	18.7	0.0	0.0	5164.1	11167.0
FEB	2630.0	871.5	534.5	0.0	0.0	25.4	84.8	2604.7	16.9	0.0	0.0	4454.2	9856.4
MAR	1133.1	456.3	515.0	0.0	0.0	0.0	53.4	1133.1	11.8	0.0	0.0	2890.7	7161.8
APR	170.0	671.2	495.9	0.0	0.0	0.0	67.4	170.0	3.5	0.0	0.0	1862.5	5361.4
MAY	158.0	662.4	471.5	0.0	0.0	89.1	63.3	68.9	1.2	0.0	0.0	1767.3	5091.7
JUN	1156.5	2253.6	609.3	0.0	0.0	1141.3	131.3	15.2	0.0	0.0	0.0	3236.0	8166.7
JUL	2712.9	3523.9	651.2	0.0	0.0	2699.4	162.2	13.5	0.0	0.0	0.0	4935.6	11190.2
AUG	1731.2	3108.0	656.8	0.0	0.0	1717.5	166.6	13.7	0.0	0.0	0.0	3972.7	9610.5
SEP	96.5	1088.0	515.2	0.0	0.0	46.3	92.3	50.2	1.0	0.0	0.0	1854.9	5436.5
OCT	117.2	366.4	434.9	0.0	0.0	0.0	48.7	117.2	3.6	0.0	0.0	1601.4	4648.2
NOV	582.3	184.4	415.4	0.0	0.0	0.0	27.3	582.3	5.1	0.0	0.0	2000.0	5224.0
DEC	1891.9	290.7	471.5	0.0	0.0	0.0	46.3	1891.9	12.9	0.0	0.0	3501.0	7981.0
TOTAL	15623.9	14423.4	6333.6	0.0	0.0	5959.9	1028.8	9664.0	74.7	0.0	0.0	37240.3	90895.5

HEATING LOADS	MBTU SUPPLIED	PCT OF TOTAL LOAD
STEAM	15624.0	100.0
LOAD SATISFIED	15624.0	100.0
TOTAL LOAD ON PLANT	15623.9	

COOLING LOADS	MBTU SUPPLIED	PCT OF TOTAL LOAD
HERM-CENT-CHLR	10574.2	73.3
ABSOR1-CHLR	3849.2	26.7
LOAD SATISFIED	14423.4	100.0
TOTAL LOAD ON PLANT	14423.4	

ELECTRICAL LOADS	KWH SUPPLIED	PCT OF TOTAL LOAD
ELECTRICITY	6333589.0	100.0
LOAD SATISFIED	6333589.0	100.0
TOTAL LOAD ON PLANT	6333653.5	

TOWER ABOVE DESIGN TEMPERATURE OF 85.F 0 HOURS

SUMMARY OF LOADS MET

TYPE OF LOAD	TOTAL LOAD (MBTU)	LOAD SATISFIED (MBTU)	TOTAL OVERLOAD (MBTU)	PEAK OVERLOAD (MBTU)	HOURS OVERLOADED
HEATING LOADS	15623.9	15624.0	0.000	0.000	0
COOLING LOADS	14423.4	14423.4	0.000	0.000	0
ELECTRICAL LOADS	21616.6	21616.3	0.000	0.000	0

ENERGY TYPE:	ELECTRICITY	STEAM
UNITS: MBTU		
CATEGORY OF USE		
AREA LIGHTS	10810.3	0.0
MISC EQUIPMT	3997.2	0.0
SPACE HEAT	0.0	9476.8
SPACE COOL	2253.7	5959.9
HEAT REJECT	643.3	0.0
PUMPS & MISC	869.2	0.0
VENT FANS	3042.6	0.0
DOMHOT WATER	0.0	187.2
TOTAL	21616.3	15624.0

TOTAL SITE ENERGY	37240.27 MBTU	58.2 KBTU/SQFT-YR GROSS-AREA	58.2 KBTU/SQFT-YR NET-AREA
TOTAL SOURCE ENERGY	90895.38 MBTU	142.0 KBTU/SQFT-YR GROSS-AREA	142.0 KBTU/SQFT-YR NET-AREA

PERCENT OF HOURS ANY SYSTEM ZONE OUTSIDE OF THROTTLING RANGE = 4.3
PERCENT OF HOURS ANY PLANT LOAD NOT SATISFIED = 0.0

NOTE: ENERGY IS APPORTIONED HOURLY TO ALL END-USE CATEGORIES.

REPORT- ES-D ENERGY COST SUMMARY

UTILITY-RATE	RESOURCE	METERS	METERED ENERGY UNITS/YR	TOTAL CHARGE ($)	VIRTUAL RATE ($/UNIT)	RATE USED ALL YEAR?
STEAM-CHG	STEAM		15624. MBTU	156275.	10.0022	YES
ELEC-RATE	ELECTRICITY	1 2 3 4 5	6333589. KWH	763611.	0.1206	YES
				==========		
				919885.		

ENERGY COST/GROSS BLDG AREA: 1.44
ENERGY COST/NET BLDG AREA: 1.44

REPORT- ES-E SUMMARY OF UTILITY-RATE: STEAM-CHG

UTILITY-RATE: STEAM-CHG
RESOURCE: STEAM
METERS:
DEMAND-WINDOW: HOUR
BILLING-DAY: 31
1000000. BTU/MBTU
RATE-LIMITATION: 0.0000

RATE-QUALIFICATIONS

MIN-ENERGY:	0.0
MAX-ENERGY:	0.0
MIN-DEMAND:	0.0
MAX-DEMAND:	0.0
QUALIFY-RATE:	ALL-MONTHS
USE-MIN-QUAL:	NO

BLOCK-CHARGES

DEMAND-RATCHETS

MIN-MON-RATCHETS

MONTH	METERED ENERGY MBTU	BILLING ENERGY MBTU	METERED DEMAND MBTU	BILLING DEMAND MBTU	ENERGY CHARGE ($)	DEMAND CHARGE ($)	ENERGY CST ADJ ($)	TAXES ($)	SURCHRG ($)	FIXED CHARGE ($)	MINIMUM CHARGE ($)	VIRTUAL RATE ($/UNIT)	TOTAL CHARGE ($)
JAN	3244	3244	26.9	26.9	32444	0	0	0	0	0	1000	10.0000	32444
FEB	2630	2630	18.1	18.1	26300	0	0	0	0	0	1000	10.0000	26300
MAR	1133	1133	17.2	17.2	11330	0	0	0	0	0	1000	10.0000	11330
APR	170	170	7.5	7.5	1700	0	0	0	0	0	1000	10.0000	1700
MAY	158	158	24.1	24.1	1580	0	0	0	0	0	1000	10.0000	1580
JUN	1157	1157	25.4	25.4	11565	0	0	0	0	0	1000	10.0000	11565
JUL	2713	2713	25.7	25.7	27129	0	0	0	0	0	1000	10.0000	27129
AUG	1731	1731	25.3	25.3	17312	0	0	0	0	0	1000	10.0000	17312
SEP	96	96	23.3	23.3	965	0	0	0	0	0	1000	10.3633	1000
OCT	117	117	6.0	6.0	1172	0	0	0	0	0	1000	10.0000	1172
NOV	582	582	23.2	23.2	5823	0	0	0	0	0	1000	10.0000	5823
DEC	1892	1892	18.6	18.6	18919	0	0	0	0	0	1000	10.0000	18919
TOTAL	15624	15624	26.9		156240	0	0	0	0	0		10.0022	156275

REPORT- ES-E SUMMARY OF UTILITY-RATE: ELEC-RATE

UTILITY-RATE: ELEC-RATE
RESOURCE: ELECTRICITY
METERS: 1 2 3 4 5
POWER-FACTOR: 0.80
DEMAND-WINDOW: HOUR
BILLING-DAY: 31
EXCESS-KVAR-FRAC: 0.30
3413. BTU/KWH
RATE-LIMITATION: 0.0000
EXCESS-KVAR-CHG: 0.0000

RATE-QUALIFICATIONS

MIN-ENERGY:	0.0
MAX-ENERGY:	0.0
MIN-DEMAND:	0.0
MAX-DEMAND:	0.0
QUALIFY-RATE:	ALL-MONTHS
USE-MIN-QUAL:	NO

BLOCK-CHARGES

WINTER-OFF-P	WINTER-DEMAND
WINTER-SHOUL	SUMMER-DEMAND
WINTER-ON-P	
SUMMER-OFF-P	
SUMMER-SHOUL	
SUMMER-ON-P	

DEMAND-RATCHETS
SUMMER-RATCH

MIN-MON-RATCHETS

MONTH	METERED ENERGY KWH	BILLING ENERGY KWH	METERED DEMAND KW	BILLING DEMAND KW	ENERGY CHARGE ($)	DEMAND CHARGE ($)	ENERGY CST ADJ ($)	TAXES ($)	SURCHRG ($)	FIXED CHARGE ($)	MINIMUM CHARGE ($)	VIRTUAL RATE ($/UNIT)	TOTAL CHARGE ($)
JAN	562481	562481	2955.4	2955.4	26054	35018	0	0	0	0	0	0.1086	61073
FEB	534479	534479	2886.6	2886.6	24789	34639	0	0	0	0	0	0.1112	59427
MAR	514984	514984	2610.9	2766.3	23904	33196	0	0	0	0	0	0.1109	57100
APR	495903	495903	2695.5	2766.3	23104	33196	0	0	0	0	0	0.1135	56300
MAY	471530	471530	2798.0	2798.0	25076	38154	0	0	0	0	0	0.1341	63230
JUN	609299	609299	2812.5	2812.5	35867	41989	0	0	0	0	0	0.1278	77857
JUL	651245	651245	3073.7	3073.7	38112	43938	0	0	0	0	0	0.1260	82050
AUG	656755	656755	2883.4	2883.4	38556	41908	0	0	0	0	0	0.1225	80464
SEP	515203	515203	2805.1	2805.1	27261	37873	0	0	0	0	0	0.1264	65134
OCT	434853	434853	2368.1	2766.3	20224	33196	0	0	0	0	0	0.1228	53420
NOV	415386	415386	2370.1	2766.3	19294	33196	0	0	0	0	0	0.1264	52490
DEC	471472	471472	2296.5	2766.3	21871	33196	0	0	0	0	0	0.1168	55066
TOTAL	6333589	6333589	3073.7		324113	439498	0	0	0	0		0.1206	763611

REPORT- ES-F BLOCK-CHARGE AND RATCHET SUMMARY FOR: ELEC-RATE

UTILITY-RATE: ELEC-RATE
RESOURCE: ELECTRICITY
ENERGY-UNITS: KWH
DEMAND-UNITS: KW
DEMAND-WINDOW: HOUR

BLOCK-CHARGES	JAN	FEB	MAR	APR	MAY	JUN	JUL	AUG	SEP	OCT	NOV	DEC	YEAR
WINTER-OFF-P USE: TIME-OF-USE													
METERED ENERGY:	70971	63626	56737	48206	22322	0	0	0	23773	43839	43962	53418	
BILLING ENERGY:	70971	63626	56737	48206	22322	0	0	0	23773	43839	43962	53418	426854
KWH/KW DEMAND:	2766.3	2766.3	2766.3	2766.3	2766.3	0.0	0.0	0.0	2766.3	2766.3	2766.3	2766.3	
ENERGY CHGS($):	2839	2545	2269	1928	893	0	0	0	951	1754	1758	2137	17074
WINTER-SHOUL USE: TIME-OF-USE													
METERED ENERGY:	272013	259807	255557	241750	108901	0	0	0	124520	216038	207049	233780	
BILLING ENERGY:	272013	259807	255557	241750	108901	0	0	0	124520	216038	207049	233780	1919414
KWH/KW DEMAND:	2955.4	2859.6	2766.3	2766.3	2766.3	0.0	0.0	0.0	2766.3	2766.3	2766.3	2766.3	
ENERGY CHGS($):	12241	11691	11500	10879	4901	0	0	0	5603	9722	9317	10520	86374
WINTER-ON-P USE: TIME-OF-USE													
METERED ENERGY:	219500	211050	202690	205947	89587	0	0	0	107522	174976	164375	184277	
BILLING ENERGY:	219500	211050	202690	205947	89587	0	0	0	107522	174976	164375	184277	1559923
KWH/KW DEMAND:	2918.2	2886.6	2766.3	2766.3	2766.3	0.0	0.0	0.0	2766.3	2766.3	2766.3	2766.3	
ENERGY CHGS($):	10975	10552	10135	10297	4479	0	0	0	5376	8749	8219	9214	77996
SUMMER-OFF-P USE: TIME-OF-USE													
METERED ENERGY:	0	0	0	0	20012	56643	76306	69459	21058	0	0	0	
BILLING ENERGY:	0	0	0	0	20012	56643	76306	69459	21058	0	0	0	243478
KWH/KW DEMAND:	0.0	0.0	0.0	0.0	2766.3	2766.3	2766.3	2766.3	2766.3	0.0	0.0	0.0	
ENERGY CHGS($):	0	0	0	0	901	2549	3434	3126	948	0	0	0	10957
SUMMER-SHOUL USE: TIME-OF-USE													
METERED ENERGY:	0	0	0	0	109298	260423	269322	274394	110862	0	0	0	
BILLING ENERGY:	0	0	0	0	109298	260423	269322	274394	110862	0	0	0	1024299
KWH/KW DEMAND:	0.0	0.0	0.0	0.0	2766.3	2812.5	3073.7	2883.4	2805.1	0.0	0.0	0.0	
ENERGY CHGS($):	0	0	0	0	6011	14323	14813	15092	6097	0	0	0	56336
SUMMER-ON-P USE: TIME-OF-USE													
METERED ENERGY:	0	0	0	0	121410	292234	305617	312903	127469	0	0	0	
BILLING ENERGY:	0	0	0	0	121410	292234	305617	312903	127469	0	0	0	1159632
KWH/KW DEMAND:	0.0	0.0	0.0	0.0	2798.0	2799.3	2929.2	2793.8	2791.9	0.0	0.0	0.0	
ENERGY CHGS($):	0	0	0	0	7892	18995	19865	20339	8285	0	0	0	75376
WINTER-DEMAND USE: TIME-OF-USE													
METERED DEMAND:	2918.2	2886.6	2420.5	2695.5	2249.6	0.0	0.0	0.0	2637.3	2368.1	2370.1	2275.4	
BILLING DEMAND:	2918.2	2886.6	2766.3	2766.3	2798.0	0.0	0.0	0.0	2791.9	2766.3	2766.3	2766.3	
PRORATE FACTOR:	1.0000	1.0000	1.0000	1.0000	0.4545	0.0000	0.0000	0.0000	0.4783	1.0000	1.0000	1.0000	
DEMAND CHGS($):	35018	34639	33196	33196	15262	0	0	0	16023	33196	33196	33196	266920
SUMMER-DEMAND USE: TIME-OF-USE													
METERED DEMAND:	0.0	0.0	0.0	0.0	2798.0	2799.3	2929.2	2793.8	2791.9	0.0	0.0	0.0	
BILLING DEMAND:	0.0	0.0	0.0	0.0	2798.0	2799.3	2929.2	2793.8	2791.9	0.0	0.0	0.0	
PRORATE FACTOR:	0.0000	0.0000	0.0000	0.0000	0.5455	1.0000	1.0000	1.0000	0.5217	0.0000	0.0000	0.0000	
DEMAND CHGS($):	0	0	0	0	22892	41989	43938	41908	21850	0	0	0	172577

TOTAL ENERGY:	562484	534482	514984	495903	471530	609299	651245	656755	515204	434853	415386	471475	6333600
TOTAL CHARGES ($):	61073	59427	57100	56300	63230	77857	82050	80464	65134	53420	52490	55066	763611

REPORT- ES-F RATCHET SUMMARY FOR: ELEC-RATE

RATCHETS	TYPE	JAN	FEB	MAR	APR	MAY	JUN	JUL	AUG	SEP	OCT	NOV	DEC
SUMMER-RATCH	HIGHEST	2766.3	2766.3	2766.3	2766.3	2766.3	2766.3	2766.3	2766.3	2766.3	2766.3	2766.3	2766.3

31-Story Office Building, LOAD2

DrawBDL axonometric view of top floor and mid-floor (multiplier = 30) as input into BDL. The roof and interior walls are not shown. For daylighting simulation, each 25-ft-wide bay on the perimeter of all four exposures is input as a separate zone with a multiplier. There are eight bays per floor on the east and west, and four bays per floor on the north and south.

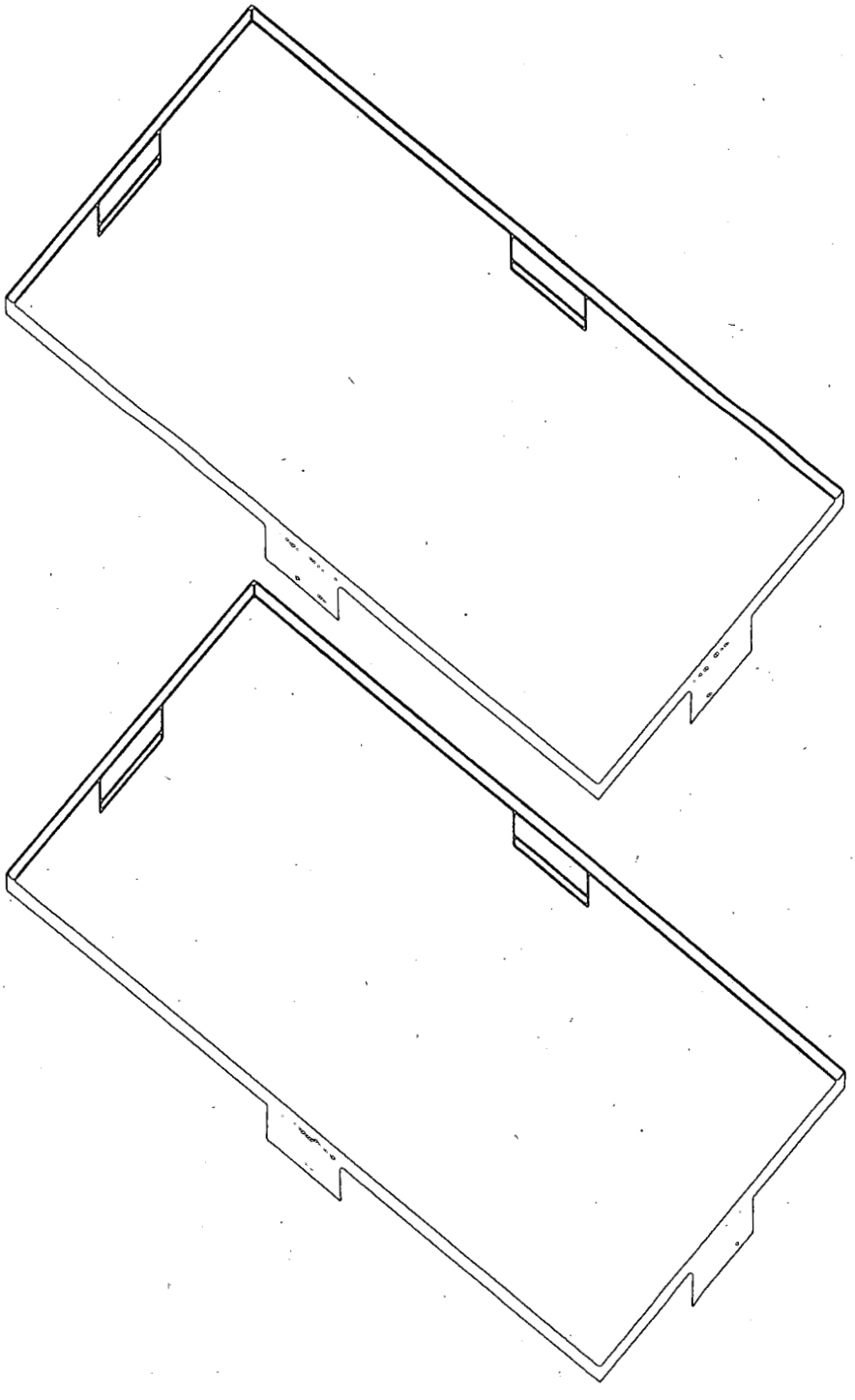

791-8074AA

```
* 932 * TITLE        LINE-1 *31-STORY OFFICE BLDG, CHICAGO - LOAD2 *
* 933 *              LINE-2 * CUSTOM WEIGHTING FACTORS & DAYLIGHTING *
* 934 *              LINE-3 * *  ..
* 935 *
* 936 *               ABORT          ERRORS     ..
* 937 *               DIAGNOSTIC     WARNINGS   ..
* 938 *
* 939 *               LOADS-REPORT   V=(LV-K)    SUMMARY=(LS-C,LS-D,LS-I)  ..
* 940 *               RUN-PERIOD          JAN 1 1988 THRU  DEC 31 1988   ..
* 941 *               BUILDING-LOCATION   LATITUDE=42  LONGITUDE=88
* 942 *                                   TIME-ZONE=6  ALTITUDE=610
* 943 *               ATM-MOISTURE=(.36,.32,.40,.53,.76,1.11,1.21,1.12,.88,.66,
* 944 *                            .43,.35)
* 945 *               ATM-TURBIDITY=(.15,.18,.21,.18,.18,.19,.22,.16,.16,.14,.13,
* 946 *                             .15)  ..
* 947 *
* 948 *                     $ BUILDING DESCRIPTION
* 949 *
* 950 * $                 THIS EXAMPLE HAS THREE SPECIAL FEATURES:
* 951 *
* 952 * $               1 IT USES CUSTOM WEIGHTING FACTORS FOR THE EXTERIOR ZONES,
* 953 * $                 WHICH GIVES A BETTER SIMULATION
* 954 * $                 OF BUILDING MASS AND HVAC SYSTEM PERFORMANCE.
* 955 * $                 THE INTERIOR ZONES ARE INPUT
* 956 * $                 USING STANDARD ASHRAE WEIGHTING FACTORS WITH
* 957 * $                 A FLOOR WEIGHT OF 150LB/SQFT TO REPRESENT THE MASS OF ELEVATOR
* 958 * $                 SHAFT WALLS, WHICH ARE ASSUMED TO BE HEAVY REINFORCED
* 959 * $                 CONSTRUCTION FOR WIND BRACING.
* 960 * $
* 961 * $               2 IT DEMONSTRATES DAYLIGHTING AND ASSOCIATED ELECTRIC LIGHTING
* 962 * $                 CONTROLS. EACH 25 FT WIDE BAY ON
* 963 * $                 ALL FOUR EXPOSURES IS TREATED AS A SEPARATE ZONE.
* 964 * $                 THERE ARE 8 BAYS PER FLOOR ON THE EAST AND WEST EXPOSURES
* 965 * $                 AND 4 BAYS PER FLOOR ON THE NORTH AND SOUTH.
* 966 * $
* 967 * $               3 IT DEMONSTRATES HOW DOE-2 INPUT CAN BE SHORTENED BY
* 968 * $                 OMITTING U-NAMES FOR EVERY WALL AND FLOOR SURFACE.  THIS
* 969 * $                 MAKES THE VERIFICATION REPORTS LESS READABLE AS MOST SURFACES
* 970 * $                 ARE NOT IDENTIFIED.
* 971 * $                 IN ADDITION, AS ANOTHER WAY OF SHORTENING THE INPUT,
* 972 * $                 ABBREVIATIONS ARE USED EXTENSIVELY,
* 973 * $                 BUT THE FIRST INPUT ENTRY IS WRITTEN USING THE FULL KEYWORD
* 974 * $                 FOR CLARIFICATION.  EQUAL SIGNS ARE ALSO OMITTED IN MOST
* 975 * $                 CASES.
* 976 *
* 977 * $        NOTE THAT THE FOLLOWING DESCRIPTION IS IDENTICAL TO
* 978 * $        *31-STORY OFFICE BLDG - LOAD1* EXCEPT THAT:
* 979 * $        (1) CEILING PLENUMS HAVE BEEN ADDED;
* 980 * $        (2) DAYLIGHTING IS SPECIFIED; AND
* 981 * $        (3) FOR THE DAYLIGHTING CALCULATION, THE PERIMETER ZONES HAVE BEEN
* 982 * $            DIVIDED INTO INDIVIDUAL ROOMS, SO THAT RZ2, RZ4, TZ2, AND TZ4
* 983 * $            NOW HAVE MULTIPLIER=8 AND RZ3,RZ5,TZ3, AND TZ5 HAVE MULTIPLIER=4
* 984 * $            (AS BEFORE, THE TZ ZONES ALSO HAVE FLOOR-MULTIPLIER=30, SO THAT
* 985 * $            THERE ARE 8X30=240 TZ2 AND TZ4 ZONES AND 4X30=120 TZ3 AND TZ5
* 986 * $            ZONES).
```

```
* 987 *
* 988 * $ STRUCTURE    STEEL FRAME WITH 4" CONCRETE FLOORS AND ROOF.  31 OCCUPIED
* 989 * $              STORIES, 13FT FLOOR TO FLOOR HEIGHT, 9FT CEILINGS.  RETURN
* 990 * $              AIR CEILING PLENUMS ARE DEFINED; ONE FOR THE TOP FLOOR AND ONE
* 991 * $              FOR THE TYPICAL FLOORS.
* 992 *
* 993 * $ CURTAIN WALL USING CODE-WORDS FROM DOE-2 LIBRARY (REFERENCE MANUAL, PART 2)
* 994 * $              AND STARTING WITH OUTSIDE WORKING INWARD: 1/4IN SPANDREL GLASS
* 995 * $              (NOT IN LIBRARY - SEE MATERIAL SPGL); 2IN POLYSTRENE INSUL
* 996 * $              R-8 (IN35); STEEL BACKPANEL (AS01); 2IN AIRSPACE (AL21);
* 997 * $              3/4IN GYPSUM BOARD FINISH (GP03) .
* 998 *
* 999 * $ ROOF         ROOF GRAVEL (RG02); BUILT-UP ROOFING (BR01); 3IN ROOF INSUL R-8
*1000 * $              (IN76); 4IN CONCRETE (CC03); INSIDE-FILM-RESISTANCE .76 .
*1001 *
*1002 * $ WINDOWS      DOUBLE-GLAZED TINTED, SOLAR TRANSMITTANCE=.53, GLASS TYPE CODE=5.
*1003 * $              WINDOWS HAVE INSIDE BLINDS THAT ARE PULLED WHENEVER TRANSMITTED
*1004 * $              DIRECT SOLAR RADIATION EXCEEDS 40 BTUH PER SQFT AND IF THE WINDOW
*1005 * $              GLARE INDEX EXCEEDS A VALUE OF 22.  THE BLINDS ARE CONSIDERED
*1006 * $              TO BE REOPENED WITH A PROBABILITY OF .4 WHEN SOLAR EFFECT IS LESS
*1007 * $              THAN 40 BTUH.
*1008 *
*1009 * $ INTERIORS    CEILINGS ARE SUSPENDED ACCOUSTIC TILE.
*1010 * $              PARTITIONS SIMULATE CONVECTIVE HEAT TRANSFER BETWEEN CORE AND
*1011 * $              PERIMETER SPACES USING A U-VALUE OF 1.5.
*1012 *
*1013 * $ SPACE LOADS  LIGHTING RECESSED FLUORSCENT AT 1.5 WATTS/SQFT.
*1014 * $              OFFICE EQUIPMENT 1 WATTS/SQFT.
*1015 * $              PEOPLE  100SQFT/PERSON FOR PERIMETER SPACES
*1016 * $                      200SQFT/PERSON FOR CORE AREAS.
*1017 * $              INFILTRATION .3 AIR CHANGES/HR FOR PERIMETER AREAS WHEN FANS
*1018 * $              ARE OFF -.06 AIR CHANGES/HR WHEN FANS ARE ON.
*1019 *
*1020 * $ HVAC DESCRIPTIONS ARE TO BE FOUND WITH EACH INDIVIDUAL SYSTEM AND PLANT INPUT.
*1021 *
*1022 *                    $ MATERIALS NOT IN DOE-2 LIBRARY
*1023 *
*1024 * SPGS=MATERIAL      TH=.0208  COND=.590  DENS=172.   S-H=.20   ..
*1025 *
*1026 *                    $ WALL CONSTRUCTIONS
*1027 *
*1028 * ROOFER        =LAYERS  MAT (RG02,BR01,IN76,CC03)  I-F-R .76  ..
*1029 * WALLER        =LAYERS  MAT (SPGS,IN35,AS01,AL21,GP03)  ..
*1030 * FLR-UP        =LAYERS  MAT (CP01,CC03)  ..
*1031 * FLR-DN        =LAYERS  MAT (CC03,CP01)  ..
*1032 * PARTITION     =LAYERS  MAT (GP01,AL21,GP01)  ..
*1033 *
*1034 * RF            =CONSTRUCTION        LAYERS=ROOFER   ..
*1035 * WL1           =CONSTRUCTION        LAYERS=WALLER   ..
*1036 * CEIL          =CONS  U=.20  ..
*1037 * FLOOR-ABOVE   =CONS  LAYERS=FLR-UP  ..
*1038 * FLOOR         =CONS  LAYERS=FLR-DN  ..
*1039 * PA2           =CONS  LAYERS =PARTITION  ..
*1040 * BW            =CONSTRUCTION        U=.05   ..
*1041 * SB-U          =CONSTRUCTION        U=1.5   ..
*1042 *
*1043 *                    $ GLASS DESCRIPTION
*1044 *
*1045 * GT1           =GLASS-TYPE  GLASS-TYPE-CODE=5  PANES=2  VIS-TRANS=.35  ..
*1046 *
*1047 *                    $ SCHEDULES
*1048 *
*1049 * OC1           =DAY-SCHEDULE        (1,8) (0.)          (9,10) (1.)
```

```
*1050 *                                   (11,13) (.8,.4,.8)  (14,24) (1.,1.,1.,
*1051 *                                                .3,.1,.1,.1,0.,0.,0.,0.)  ..
*1052 * OC2          =DAY-SCHEDULE        (1,24) (0.0)  ..
*1053 * OCCUP        =SCHEDULE            THRU DEC 31  (WD) OC1  (WEH) OC2   ..
*1054 *
*1055 * L1           =DAY-SCHEDULE        (1,6) (.05)          (7,24) (.1,.9,.9,
*1056 *                                   .95,.95,.95,.8,.8,.9,.9,.95,.8,.7,.6,
*1057 *                                   .4,.3,.2,.2)   ..
*1058 * L2           =DAY-SCHEDULE        (1,24) (.05)   ..
*1059 * LIGHTS        SCHEDULE            THRU DEC 31 (WD) L1  (WEH) L2  ..
*1060 *
*1061 * ES1          =DAY-SCHEDULE        (1,8) (0.)           (9,20) (.35,.50,
*1062 *                                   .55,.9,.6,.8,.7,.75,.3,.3,.5,.05)
*1063 *                                   (21,24) (0.0)   ..
*1064 * ES2          =DAY-SCHEDULE        (1,24) (0.0)  ..
*1065 * EQUIP        =SCHEDULE            THRU DEC 31 (WD) ES1  (WEH) ES2  ..
*1066 *
*1067 * I1           =DAY-SCHEDULE        (1,7) (1.)           (8,18) (0.2)
*1068 *                                   (19,24) (1.)    ..
*1069 * I2           =DAY-SCHEDULE        (1,24) (1.)   ..
*1070 * INFIL        =SCHEDULE            THRU DEC 31  (WD)  I1  (WEH)  I2  ..
*1071 *
*1072 * SHADE-MULT      =SCHEDULE THRU DEC 31 (ALL) (1,24) (.75)  ..
*1073 * TRANS-MULT     =SCHEDULE THRU DEC 31 (ALL) (1,24) (.35)  ..
*1074 * COND-MULT      =SCHEDULE THRU DEC 31 (ALL) (1,24) (.9)  ..
*1075 * CLOSE-SHADE    =SCHEDULE THRU DEC 31 (ALL) (1,24) (40)  ..
*1076 * REOPEN-PROB    =SCHEDULE THRU DEC 31 (ALL) (1,24) (.5)  ..
*1077 *
*1078 *                  $ SPACE DESCRIPTIONS
*1079 *
*1080 * OFFICE       =SPACE-CONDITIONS    TEMPERATURE=(75)  FLOOR-WEIGHT=0  $ FOR CWF
*1081 *                                   LIGHTING-W/SQFT=1.5  EQUIPMENT-W/SQFT=1
*1082 *                                   PEOPLE-HEAT-GAIN=450
*1083 *                                   EQUIP-SCHEDULE=EQUIP  L-SCH=LIGHTS
*1084 *                                   PEOPLE-SCHEDULE=OCCUP  AIR-CHANGES/HR=.5
*1085 *                                   INF-SCHEDULE=INFIL  LIGHT-TO-SPACE=.80
*1086 *                                   INF-METHOD=AIR-CHANGE
*1087 *                                   LIGHTING-TYPE=REC-FLUOR-RV   ..
*1088 *
*1089 * A-STORAGE     =SPACE               TEMPERATURE=(75)  FLOOR-WEIGHT=150
*1090 *                                   VOLUME=400000  AREA=20000
*1091 *                                   LIGHTING-W/SQFT=1.5
*1092 *                                   LIGHTING-SCHEDULE=LIGHTS   ..
*1093 *                UNDERGROUND-WALL   AREA=12000  CONSTRUCTION=BW  ..
*1094 *                UNDERGROUND-FLOOR  AREA=20000  CONSTRUCTION=BW  ..
*1095 *
*1096 *                SET-DEFAULT FOR  EXTERIOR-WALL   HEIGHT=9.  AZIMUTH=180  ..
*1097 *                SET-DEFAULT FOR  WINDOW   HEIGHT=6.5  GLASS-TYPE=GT1
*1098 *                                 MAX-SOLAR-SCH=CLOSE-SHADE
*1099 *                                 WIN-SHADE-TYPE=MOVABLE-INTERIOR
*1100 *                                 SHADING-SCHEDULE=SHADE-MULT
*1101 *                                 CONDUCT-SCHEDULE=COND-MULT
*1102 *                                 VIS-TRANS-SCH=TRANS-MULT
*1103 *                                 OPEN-SHADE-SCH=REOPEN-PROB
*1104 *                                 SUN-CTRL-PROB=.7  ..
*1105 *
*1106 * RZ1            SPACE   SPACE-CONDITIONS OFFICE  VOLUME 107100  AREA 11900
*1107 *                        X 15  Y 15  Z 390  N-O-P 60  AIR-CHANGES/HR 0.01
*1108 *                        F-W 150  ..
*1109 *            IN1   I-W   AREA 191  CONS SB-U  NEXT-TO RZ2  ..
*1110 *            IN2   I-W   AREA 158   CONS SB-U  N-T RZ3  ..
*1111 *                  I-W   LIKE IN1  N-T RZ4  ..
*1112 *                  I-W   LIKE IN2  N-T RZ5  ..
```

```
*1113 *            CL1   I-W   AREA 11900  CONS CEIL  TILT 0  NEXT-TO PLEN1  ..
*1114 *
*1115 * RZ2            SPACE   S-C OFFICE  A 346.8  V 3114  N-O-P 4  H 8
*1116 *                        AZ -90  X 100  Y 87.5  Z 390
*1117 *                        DAYLIGHTING YES  LIGHT-REF-POINT1 (12.5,9,2.5)
*1118 *                        LIGHT-SET-POINT1 50  LIGHT-CTRL-TYPE1 CONTINUOUS
*1119 *                        MAX-GLARE 22  ..
*1120 *            CU1   E-W   H 9  W 25  CONS WL1  .. $ EAST-FACING
*1121 *
*1122 * $ FOR CU1, NOTE THAT THE SUM OF BUILDING AZIMUTH (0) + SPACE AZIMUTH (-90)
*1123 * $ + WALL AZIMUTH (180, FROM SET-DEFAULT) = 90, SO THIS WALL FACES EAST
*1124 *
*1125 *             W1    WI   W 25  Y 2.5  ..
*1126 *            IN3   I-W   A 125  CONS PA2  I-W-TYPE ADIABATIC  ..
*1127 *            IN4   I-W   LIKE IN3  ..
*1128 *            FL1   I-W   A 347  CONS FLOOR  TILT 180  I-W-TYPE ADIABATIC  ..
*1129 *            CL2   I-W   A 347  CONS CEIL   TILT 0  NEXT-TO PLEN1  ..
*1130 *
*1131 * RZ3            SPACE   LIKE RZ2  A 319  V 2869  AZ 180  X 62.5  Y 200  H 4  ..
*1132 *                  E-W   LIKE CU1  ..  WI LIKE W1  .. $ NORTH-FACING
*1133 *                  I-W   LIKE IN3  ..  I-W LIKE IN3  ..
*1134 *                  I-W   LIKE FL1  ..  I-W LIKE CL2  ..
*1135 *
*1136 * RZ4            SPACE   LIKE RZ2  AZ 90  X 0  Y 112.5  H 8  ..
*1137 *                  E-W   LIKE CU1  ..  WI LIKE W1  .. $ WEST-FACING
*1138 *                  I-W   LIKE IN3  ..  I-W LIKE IN3  ..
*1139 *                  I-W   LIKE FL1  ..  I-W LIKE CL2  ..
*1140 *
*1141 * RZ5            SPACE   LIKE RZ3  AZ 0  X 37.5  Y 0  H 4  ..
*1142 *                  E-W   LIKE CU1  ..  WI LIKE W1  .. $ SOUTH-FACING
*1143 *                  I-W   LIKE IN3  ..  I-W LIKE IN3  ..
*1144 *                  I-W   LIKE FL1  ..  I-W LIKE CL2  ..
*1145 *
*1146 * PLEN1          SPACE   ZONE-TYPE PLENUM T=(75) A 20000   V 60000  F-W 0
*1147 *                        Z 399  ..
*1148 *            EW3   E-W   H 4  W 100  AZ 0  X 100  Y 200  CONS WL1  ..
*1149 *            EW2   E-W   LIKE EW3  W 200  AZ 90  X 100  Y 0  ..
*1150 *            EW5   E-W   LIKE EW3  AZ 180  X 0  Y 0  ..
*1151 *            EW4   E-W   LIKE EW2  AZ 270  X 0  Y 200  ..
*1152 *                 ROOF   H 200  W 100  AZ 180  TILT 0  CONS RF  G-R 0  ..
*1153 *
*1154 * TZ1            SPACE   LIKE RZ1  FLOOR-MULTIPLIER 30  Z 195  ..
*1155 *                  I-W   LIKE IN1  N-T TZ2  ..
*1156 *                  I-W   LIKE IN2  N-T TZ3  ..
*1157 *                  I-W   LIKE IN1  N-T TZ4  ..
*1158 *                  I-W   LIKE IN2  N-T TZ5  ..
*1159 *                  I-W   LIKE CL1  N-T PLEN2  ..
*1160 *
*1161 * TZ2            SPACE   LIKE RZ2  F-H 30  Z 195  ..
*1162 *                  E-W   LIKE CU1  ..   WI LIKE W1  ..
*1163 *                  I-W   LIKE IN3  ..   I-W LIKE IN3  ..
*1164 *                  I-W   LIKE FL1  ..
*1165 *             CL3  I-W   LIKE CL2  NEXT-TO PLEN2  ..
*1166 *
*1167 * TZ3            SPACE   LIKE RZ3  F-H 30  Z 195  ..
*1168 *                  E-W   LIKE CU1  ..   WI LIKE W1  ..
*1169 *                  I-W   LIKE IN3  ..   I-W LIKE IN3  ..
*1170 *                  I-W   LIKE FL1  ..   I-W LIKE CL3  ..
*1171 *
*1172 * TZ4            SPACE   LIKE RZ4  F-H 30  Z 195  ..
*1173 *                  E-W   LIKE CU1  ..   WI LIKE W1  ..
*1174 *                  I-W   LIKE IN3  ..   I-W LIKE IN3  ..
*1175 *                  I-W   LIKE FL1  ..   I-W LIKE CL3  ..
```

```
*1176 *
*1177 * TZ5          SPACE   LIKE RZ5  F-H 30  Z 195  ..
*1178 *                E-W   LIKE CU1  ..   WI LIKE W1  ..
*1179 *                I-W   LIKE IN3  ..   I-W LIKE IN3  ..
*1180 *                I-W   LIKE FL1  ..   I-W LIKE CL3  ..
*1181 *
*1182 * PLEN2         SPACE   LIKE PLEN1  F-H 30  Z 204  ..
*1183 *                E-W   LIKE EW3  ..
*1184 *                E-W   LIKE EW2  ..
*1185 *                E-W   LIKE EW5  ..
*1186 *                E-W   LIKE EW4  ..
*1187 *                I-W   A 20000  CONS FLOOR-ABOVE  I-W-TYPE ADIABATIC  TILT 0 ..
*1188 *
*1189 * END  ..
```

31-STORY OFFICE BLDG, CHICAGO - LOAD2 CUSTOM WEIGHTING FACTORS & DAYLIGHTING Wed Nov 10 14:35:12 1993LDL RUN 2
OA RESET BASEBOARDS

REPORT- LV-K WEIGHTING FACTOR SUMMARY

SP NAME-- WF NAME--	A-STORAGE	RZ1	RZ2	RZ3	RZ4	RZ5	PLEN1
SOLAR							
V0	0.17292	0.17292	0.59119	0.59119	0.59119	0.59119	0.42502
V1	-0.11227	-0.11227	-0.46877	-0.46877	-0.46877	-0.46877	-0.47226
V2	0.00000	0.00000	0.07832	0.07832	0.07832	0.07832	0.09427
W1	0.93935	0.93935	0.97737	0.97737	0.97737	0.97737	1.22661
W2	0.00000	0.00000	-0.21427	-0.21427	-0.21427	-0.21427	-0.27852
GENERAL LIGHTING							
V0	0.51215	0.57446	0.79045	0.79045	0.79045	0.79045	0.36633
V1	-0.45150	-0.51380	-0.69610	-0.69610	-0.69610	-0.69610	-0.38993
V2	0.00000	0.00000	0.12995	0.12995	0.12995	0.12995	0.07147
W1	0.93935	0.93935	0.96337	0.96337	0.96337	0.96337	1.21206
W2	0.00000	0.00000	-0.20454	-0.20454	-0.20454	-0.20454	-0.26546
TASK LIGHTING							
V0	0.48093	0.48093	0.74783	0.74783	0.74783	0.74783	0.55009
V1	-0.42028	-0.42028	-0.64174	-0.64174	-0.64174	-0.64174	-0.62835
V2	0.00000	0.00000	0.11478	0.11478	0.11478	0.11478	0.12772
W1	0.93935	0.93935	0.96337	0.96337	0.96337	0.96337	1.21206
W2	0.00000	0.00000	-0.20455	-0.20455	-0.20455	-0.20455	-0.26546
PEOPLE-EQUIPMENT							
V0	0.67521	0.67521	0.75138	0.75138	0.75138	0.75138	0.55643
V1	-0.61455	-0.61455	-0.64627	-0.64627	-0.64627	-0.64627	-0.63657
V2	0.00000	0.00000	0.11604	0.11604	0.11604	0.11604	0.12966
W1	0.93935	0.93935	0.96337	0.96337	0.96337	0.96337	1.21206
W2	0.00000	0.00000	-0.20454	-0.20454	-0.20454	-0.20454	-0.26546
CONDUCTION							
V0	0.67521	0.67521	0.78261	0.78261	0.78261	0.78261	0.59074
V1	-0.61455	-0.61455	-0.68610	-0.68610	-0.68610	-0.68610	-0.68108
V2	0.00000	0.00000	0.12716	0.12716	0.12716	0.12716	0.14017
W1	0.93935	0.93935	0.96337	0.96337	0.96337	0.96337	1.21206
W2	0.00000	0.00000	-0.20455	-0.20455	-0.20455	-0.20455	-0.26546
AIR TEMP (BTU/HR-SQFT-F)							
G0°	1.84393	1.84393	0.45493	0.49458	0.45493	0.49458	0.52949
G1°	-1.99232	-1.99232	-0.63965	-0.69540	-0.63965	-0.69540	-0.71934
G2°	0.14838	0.14838	0.18417	0.20022	0.18417	0.20022	0.19022
G3°	0.00000	0.00000	0.00055	0.00060	0.00055	0.00060	-0.00036
P1	-0.93935	-0.93935	-0.93751	-0.93751	-0.93751	-0.93751	-1.25344
P2	0.00000	0.00000	0.18959	0.18959	0.18959	0.18959	0.30344

REPORT- LV-K WEIGHTING FACTOR SUMMARY

(CONTINUED)

SP NAME-- WF NAME--	TZ1	TZ2	TZ3	TZ4	TZ5	PLEN2
SOLAR						
V0	0.17292	0.59119	0.59119	0.59119	0.59119	0.43979
V1	-0.11227	-0.46877	-0.46877	-0.46877	-0.46877	-0.46752
V2	0.00000	0.07832	0.07832	0.07832	0.07832	0.08778
W1	0.93935	0.97737	0.97737	0.97737	0.97737	1.19684
W2	0.00000	-0.21427	-0.21427	-0.21427	-0.21427	-0.25739
GENERAL LIGHTING						
V0	0.57446	0.79045	0.79045	0.79045	0.79045	0.38260
V1	-0.51380	-0.69610	-0.69610	-0.69610	-0.69610	-0.38594
V2	0.00000	0.12995	0.12995	0.12995	0.12995	0.06530
W1	0.93935	0.96337	0.96337	0.96337	0.96337	1.17820
W2	0.00000	-0.20454	-0.20454	-0.20454	-0.20454	-0.24075
TASK LIGHTING						
V0	0.48093	0.74783	0.74783	0.74783	0.74783	0.56165
V1	-0.42028	-0.64174	-0.64174	-0.64174	-0.64174	-0.61570
V2	0.00000	0.11478	0.11478	0.11478	0.11478	0.11618
W1	0.93935	0.96337	0.96337	0.96337	0.96337	1.17820
W2	0.00000	-0.20455	-0.20455	-0.20455	-0.20455	-0.24075
PEOPLE-EQUIPMENT						
V0	0.67521	0.75138	0.75138	0.75138	0.75138	0.56782
V1	-0.61455	-0.64627	-0.64627	-0.64627	-0.64627	-0.62362
V2	0.00000	0.11604	0.11604	0.11604	0.11604	0.11793
W1	0.93935	0.96337	0.96337	0.96337	0.96337	1.17820
W2	0.00000	-0.20454	-0.20454	-0.20454	-0.20454	-0.24075
CONDUCTION						
V0	0.67521	0.78261	0.78261	0.78261	0.78261	0.62211
V1	-0.61455	-0.68610	-0.68610	-0.68610	-0.68610	-0.69328
V2	0.00000	0.12716	0.12716	0.12716	0.12716	0.13336
W1	0.93935	0.96337	0.96337	0.96337	0.96337	1.17820
W2	0.00000	-0.20455	-0.20455	-0.20455	-0.20455	-0.24075
AIR TEMP (BTU/HR-SQFT-F)						
G0*	1.84393	0.45493	0.49458	0.45493	0.49458	0.73939
G1*	-1.99232	-0.63965	-0.69540	-0.63965	-0.69540	-0.98453
G2*	0.14838	0.18417	0.20022	0.18417	0.20022	0.24567
G3*	0.00000	0.00055	0.00060	0.00055	0.00060	-0.00053
P1	-0.93935	-0.93751	-0.93751	-0.93751	-0.93751	-1.22491
P2	0.00000	0.18959	0.18959	0.18959	0.18959	0.28319

```
°1190 ° COMPUTE LOADS  ..
°1191 ° INPUT SYSTEMS  ..
```

*** BUILDING ***

FLOOR AREA	640025	SQFT	59458	SQMT
VOLUME	7836156	CUFT	221920	CUMT

	COOLING LOAD		HEATING LOAD	
TIME	JUL 13 4PM		JAN 12 3AM	
DRY-BULB TEMP	97F	36C	1F	-17C
WET-BULB TEMP	77F	25C	0F	-18C

	SENSIBLE (KBTU/H)	SENSIBLE (KW)	LATENT (KBTU/H)	LATENT (KW)	SENSIBLE (KBTU/H)	SENSIBLE (KW)
WALL CONDUCTION	129.241	37.868	0.000	0.000	-286.874	-84.054
ROOF CONDUCTION	0.000	0.000	0.000	0.000	0.000	0.000
WINDOW GLASS+FRM COND	1894.288	555.026	0.000	0.000	-4087.626	-1197.674
WINDOW GLASS SOLAR	4445.044	1302.398	0.000	0.000	3.298	0.966
DOOR CONDUCTION	0.000	0.000	0.000	0.000	0.000	0.000
INTERNAL SURFACE COND	0.000	0.000	0.000	0.000	0.000	0.000
UNDERGROUND SURF COND	-17.600	-5.157	0.000	0.000	-56.000	-16.408
OCCUPANTS TO SPACE	1116.352	327.091	857.121	251.136	1.650	0.483
LIGHT TO SPACE	1457.277	426.982	0.000	0.000	81.580	23.903
EQUIPMENT TO SPACE	1344.543	393.951	0.000	0.000	2.232	0.654
PROCESS TO SPACE	0.000	0.000	0.000	0.000	0.000	0.000
INFILTRATION	150.299	44.038	192.850	56.505	-2480.536	-726.797
TOTAL	10519.444	3082.197	1049.971	307.642	-6822.276	-1998.927
TOTAL LOAD	11569.416 KBTU/H		3389.839 KW		-6822.276 KBTU/H	-1998.927 KW
TOTAL LOAD / AREA	18.08BTU/H.SQFT		57.010 W /SQMT		10.659BTU/H.SQFT	33.618 W /SQMT

```
*****************************************************************
*                                                               *
*  NOTE  1)THE ABOVE LOADS EXCLUDE OUTSIDE VENTILATION AIR      *
*  ----     LOADS                                               *
*        2)TIMES GIVEN IN STANDARD TIME FOR THE LOCATION        *
*          IN CONSIDERATION                                     *
*                                                               *
*****************************************************************
```

31-STORY OFFICE BLDG, CHICAGO - LOAD2 CUSTOM WEIGHTING FACTORS & DAYLIGHTING DOE-2.1E-001 Wed Nov 10 14:35:12 1993LDL RUN 2
OA RESET BASEBOARDS
REPORT- LS-D BUILDING MONTHLY LOADS SUMMARY WEATHER FILE- TRY CHICAGO

	COOLING						HEATING						ELEC	
MONTH	COOLING ENERGY (MBTU)	TIME OF MAX DY	TIME OF MAX HR	DRY-BULB TEMP	WET-BULB TEMP	MAXIMUM COOLING LOAD (KBTU/HR)	HEATING ENERGY (MBTU)	TIME OF MAX DY	TIME OF MAX HR	DRY-BULB TEMP	WET-BULB TEMP	MAXIMUM HEATING LOAD (KBTU/HR)	ELEC-TRICAL ENERGY (KWH)	MAXIMUM ELEC LOAD (KW)
JAN	808.21442	25	15	47.F	42.F	6024.511	-1819.494	12	3	1.F	0.F	-6822.276	300281.	1349.438
FEB	834.27246	25	16	27.F	22.F	6864.054	-1661.532	4	6	7.F	6.F	-6257.168	277062.	1333.500
MAR	1159.44556	3	15	76.F	65.F	7450.762	-1311.005	24	5	9.F	8.F	-6681.700	324199.	1251.543
APR	1638.80640	27	15	82.F	61.F	9119.307	-764.648	8	6	32.F	29.F	-5164.872	303483.	1222.188
MAY	1841.75269	20	14	76.F	67.F	9513.387	-522.187	6	3	38.F	35.F	-3994.568	276221.	1219.561
JUN	2304.76953	4	15	85.F	67.F	10225.854	-236.597	22	23	54.F	48.F	-2229.502	297458.	1219.561
JUL	2695.18799	13	15	97.F	77.F	10519.444	-88.570	23	5	61.F	60.F	-1275.956	286591.	1219.561
AUG	2396.09668	19	15	90.F	71.F	10285.552	-130.676	5	5	55.F	54.F	-1372.005	301370.	1219.561
SEP	1881.36218	17	15	82.F	66.F	9826.906	-421.772	29	6	46.F	44.F	-3444.435	294181.	1221.081
OCT	1372.15564	22	15	70.F	55.F	8202.183	-697.232	2	4	31.F	28.F	-3799.418	289995.	1289.510
NOV	962.80908	8	15	60.F	49.F	8115.301	-1284.995	15	3	26.F	25.F	-5110.487	296965.	1325.629
DEC	782.75873	10	15	41.F	35.F	6606.250	-1720.530	8	20	18.F	16.F	-5292.845	316174.	1362.779
TOTAL	18677.631						-10659.238						3563981.	
MAX						10519.444						-6822.276		1362.779

*** BUILDING ***

	HOUR OF DAY																								
MONTH	1	2	3	4	5	6	7	8	9	10	11	12	13	14	15	16	17	18	19	20	21	22	23	24	ALL HOURS
JAN	0	0	0	0	0	0	0	1	9	16	18	18	18	18	16	11	1	0	0	0	0	0	0	0	9
FEB	0	0	0	0	0	0	0	6	15	17	18	18	18	18	18	16	9	0	0	0	0	0	0	0	11
MAR	0	0	0	0	0	0	4	14	19	19	19	19	19	18	19	18	15	3	0	0	0	0	0	0	13
APR	0	0	0	0	0	2	14	18	18	19	19	19	19	19	18	18	18	10	0	0	0	0	0	0	14
MAY	0	0	0	0	0	10	18	18	19	19	19	19	19	19	19	19	19	15	4	0	0	0	0	0	15
JUN	0	0	0	0	1	13	18	19	19	19	19	19	19	19	19	19	18	18	10	0	0	0	0	0	16
JUL	0	0	0	0	0	11	18	19	19	19	19	19	19	19	19	18	18	18	10	0	0	0	0	0	16
AUG	0	0	0	0	0	4	16	19	18	19	19	19	19	19	19	19	19	15	3	0	0	0	0	0	15
SEP	0	0	0	0	0	0	11	18	18	19	19	19	18	18	19	18	15	5	0	0	0	0	0	0	14
OCT	0	0	0	0	0	0	4	14	18	18	18	18	18	17	18	15	6	0	0	0	0	0	0	0	12
NOV	0	0	0	0	0	0	0	8	14	18	18	18	18	18	15	8	0	0	0	0	0	0	0	0	9
DEC	0	0	0	0	0	0	0	1	9	15	18	18	18	18	13	6	0	0	0	0	0	0	0	0	8
ANNUAL	0	0	0	0	0	4	13	13	16	18	19	18	18	18	18	16	11	7	2	0	0	0	0	0	13

NOTE- THE ENTRIES IN THIS REPORT ARE NOT
SUBJECT TO THE DAYLIGHTING REPORT SCHEDULE

S D L P R O C E S S O R I N P U T D A T A

Wed Nov 10 14:35:12 1993SDL RUN 4

```
°1192 ° TITLE  LINE-2 ° RUN 4 - FOUR PIPE FANCOIL PERIMETER °
°1193 °        LINE-4 ° VAR TEMP SINGLE ZONE INTERIOR °  ..
°1194 °
°1195 °                        $  HVAC SYSTEM DESCRIPTION
°1196 °
°1197 ° $ DESIGN TEMPS  COOLING 76F  HEATING 70F
°1198 ° $ SYSTEM TYPE   A TYPICAL FOUR PIPE FANCOIL SYSTEM SERVES THE PERIMETER ZONES.
°1199 ° $               THE INTERIOR IS SERVED BY A VARIABLE TEMPERATURE CONSTANT VOLUME
°1200 ° $               AIR HANDLING UNIT WHICH SUPPLIES OUTSIDE AIR VENTILATION OF
°1201 ° $               20 CFM/PERSON FOR THE ENTIRE BUILDING (INCLUDING PERIMETER).
°1202 ° $               THE INTERIOR SYSTEM IS CONTROLLED TO SATISFY THE TYPICAL CORE
°1203 ° $               AREA BUT THERE IS A REHEAT COIL ON THE TOP FLOOR TO HANDLE
°1204 ° $               THE ROOF LOAD.  THE MINIMUM OUTSIDE AIR DAMPER IS HELD CLOSED
°1205 ° $               UNTIL 8AM WHICH IS THE POINT OF OCCUPANCY EVEN THOUGH FANS START
°1206 ° $               AT 7AM.  FANS CAN START AS EARLY AS 5AM WHEN NECESSARY TO PICK
°1207 ° $               UP THE MORNING START-UP LOADS.  THE LOW-LIMIT SETPOINT IS 55F
°1208 ° $               NIGHTS AND WEEKENDS BUT ONLY THE FANCOIL UNITS ARE OPERATIVE.
°1209 °
°1210 °
°1211 ° SYSTEMS-REPORT  S (SS-A,SS-D,SS-J)  ..
°1212 °
°1213 ° FANSON  SCH THRU DEC 31 (WD) (1,5)(0) (6,7)(-999) (8,18)(1) (19,24) (0)
°1214 °                         (WEH) (1,24) (0)  ..
°1215 °
°1216 ° HEAT-SETPT SCH THRU DEC 31 (WD) (1,7) (55) (8,18) (70) (19,24) (55)
°1217 °                            (WEH) (1,24) (55)  ..
°1218 ° COOL-SETPT SCH THRU DEC 31 (WD) (1,7) (99) (8,18) (76) (19,24) (99)
°1219 °                            (WEH) (1,24) (99)  ..
°1220 °
°1221 ° HEATON SCH THRU DEC 31 (ALL) (1,24) (65)  ..
°1222 °
°1223 ° OA-DAMP-POS SCH THRU DEC 31 (ALL) (1,8)(.01) (9,18)(-999) (19,24)(.01)   ..
°1224 °
°1225 ° ENV  ZONE-CONTROL  D-H-T 70  D-C-T 74  H-T-SCH HEAT-SETPT  C-T-SCH COOL-SETPT ..
°1226 °
°1227 ° RZ1  Z Z-C  ENV  OUTSIDE-AIR-CFM 2500  SIZING-OPTION ADJUST-LOADS
°1228 °                                        CFM/SQFT .9  ..
°1229 ° RZ2  Z LIKE RZ1  O-A-CFM 28  ..
°1230 ° RZ3  Z LIKE RZ2  O-A-CFM 28  ..
°1231 ° RZ4  Z LIKE RZ2  O-A-CFM 28  ..
°1232 ° RZ5  Z LIKE RZ2  O-A-CFM 28  ..
°1233 ° TZ1  Z  Z-C ENV  O-A-CFM 2500  CFM/SQFT .9  ..
°1234 ° TZ2  Z LIKE RZ2  ..
°1235 ° TZ3  Z LIKE RZ3  ..
°1236 ° TZ4  Z LIKE RZ4  ..
°1237 ° TZ5  Z LIKE RZ5  ..
°1238 ° PLEN1  Z Z-TYPE PLENUM  S-O ADJUST-LOADS  D-H-T 50  D-C-T 90  ..
°1239 ° PLEN2  Z Z-TYPE PLENUM  ..
°1240 ° A-STORAGE  Z LIKE RZ1  AIR-CHANGES/HR 4  ..
°1241 °
°1242 °
°1243 ° CORESYS  SYSTEM  S-TYPE SZRH  MAX-S-T 105  MIN-S-T 55  SUPPLY-STATIC 4.0
°1244 °                  SUPPLY-EFF .55  F-SCH FANSON  H-SCH HEATON
°1245 °                  MIN-AIR-SCH OA-DAMP-POS  REHEAT-DELTA-T 30
°1246 °                  ECONO-LIMIT-T 68   ECONO-LOW-LIMIT 45
```

```
*1247 *                  RETURN-AIR-PATH PLENUM-ZONES   RETURN-STATIC 1.5  R-E .50
*1248 *                  PLENUM-NAMES (PLEN1,PLEN2) Z-N (TZ1,RZ1,PLEN1,PLEN2,
*1249 *                                                          A-STORAGE)  ..
*1250 * FANCOIL  SYSTEM  S-TYPE FPFC  MAX-SUPPLY-T 105  MIN-SUPPLY-T 60
*1251 *                  N-C-C CYCLE-ON-ANY  F-SCH FANSON  H-SCH HEATON
*1252 *                  SUPPLY-STATIC .20  SUPPLY-EFF .20
*1253 *                  OA-FROM-SYSTEM = CORESYS  $OUTSIDE AIR OF CORESYS
*1254 *                                            $MUST EXCEED FANCOIL UNITS
*1255 *                  Z-N (RZ2,RZ3,RZ4,RZ5,TZ2,TZ3,TZ4,TZ5)  ..
*1256 *
*1257 * PLANT1  = PLANT-ASSIGNMENT  SYSTEM-NAMES = (CORESYS,FANCOIL)
*1258 *                             INT-ELEC-KW = 100  $ FOR ELEVATORS
*1259 *                             INT-ELEC-SCH = OCCUP
*1260 *                             DHW-SIZE=0
*1261 *                             DHW-GAL/HIN  = 2.22
*1262 *                             DHW-SCH      = OCCUP  ..
*1263 *
*1264 * OC1           =DAY-SCHEDULE        (1,8) (0.)          (9,10) (1.)
*1265 *                                    (11,13) (.8,.4,.8)  (14,24) (1.,1.,1.,
*1266 *                                                   .3,.1,.1,.1,0.,0.,0.,0.)  ...
*1267 * OC2           =DAY-SCHEDULE        (1,24) (0.0)  ..
*1268 * PEOPLE        =WEEK-SCHEDULE       (MON,FRI)  OC1      (WEH)  OC2  ..
*1269 * OCCUP         =SCHEDULE            THRU DEC 31  PEOPLE   ..
*1270 * END  ..
*1271 * COMPUTE SYSTEMS  ..
*1272 * INPUT PLANT  ..
```

```
°1273 ° PLANT1 = PLANT-ASSIGNMENT  ..
°1274 °
°1275 °                    $ PLANT DESCRIPTION
°1276 °
°1277 ° $ MECHANICAL COOLING IS AVAILABLE YEAR-ROUND FROM A HEAT
°1278 ° $ RECOVERY PLANT USING A DOUBLE BUNDLE CHILLER BASE LOADED IN WINTER.
°1279 ° $ HEAT RECOVERED FROM THE DOUBLE BUNDLE CHILLER IS STORED IN A HOT WATER TANK
°1280 ° $ AND USED FOR MORNING START UP.
°1281 ° $ TWO STANDARD CENTRIFUGAL CHILLERS ARE BASE LOADED IN SUMMER WITH THE DOUBLE
°1282 ° $ BUNDLE CHILLER OFF.  THE GAS FIRED HOT WATER GENERATOR CAN SUPPLEMENT THE
°1283 ° $ DOUBLE BUNDLE IF NECESSARY BUT IT CANNOT CHARGE THE STORAGE TANK.
°1284 °
°1285 ° PLANT-REPORT  S (PS-A,BEPS)  ..
°1286 °
°1287 ° CMPC  P-E  TYPE HERM-CENT-CHLR   SIZE 7.8  I-N 2  ..
°1288 ° HWG   P-E  TYPE HW-BOILER   SIZE 17  I-N 1  ..
°1289 ° DHH   P-E  TYPE DHW-HEATER  SIZE .1  ..
°1290 ° RCVY  P-E  TYPE DBUN-CHLR   SIZE 10  I-N 1  ..
°1291 ° STOR  P-E  TYPE HTANK-STORAGE  SIZE 20  I-N 1  ..
°1292 °
°1293 ° HEAT-RECOVERY  SUPPLY-1 (DBUN-CHLR,HTANK-STORAGE)
°1294 °                DEMAND-1 (SPACE-HEAT)
°1295 °                SUPPLY-2 (DBUN-CHLR)
°1296 °                DEMAND-2 (HTANK-STORAGE)  ..
°1297 °
°1298 ° ENERGY-STORAGE  HEAT-STORE-RATE 10  HEAT-SUPPLY-RATE 12
°1299 °                 HTANK-T-RANGE 10  HTANK-LOSS-COEF 400
°1300 °                 HTANK-ENV-T 65  HEAT-STORE-SCH ALWAYS  ..
°1301 °
°1302 ° ALWAYS SCH THRU DEC 31 (ALL) (1,24) (1)  ..
°1303 °
°1304 ° PLANT-PARAMETERS  CCIRC-PUMP-TYPE VARIABLE-SPEED
°1305 °                   HCIRC-PUMP-TYPE FIXED-SPEED  DBUN-MIN-HEAT .8  ..
°1306 °
°1307 ° WIN-HEAT  LOAD-ASSIGNMENT  TYPE HEATING  L-R 99
°1308 °                P-E STOR  N 1
°1309 °                P-E HWG   N 1  ..
°1310 °
°1311 ° HT2 DAY-ASSIGN-SCH  (1,24) (WIN-HEAT)  ..
°1312 ° HEAT-CTRL SCHEDULE  THRU DEC 31 (ALL) HT2  ..
°1313 °
°1314 ° WINTER-OP  LOAD-ASSIGNMENT  TYPE COOLING  L-R 99
°1315 °                P-E RCVY  N 1
°1316 °                P-E CMPC  N 1  ..
°1317 °
°1318 ° SUMMER-OP  LOAD-ASSIGNMENT  TYPE COOLING  L-R 99
°1319 °                P-E CMPC  N 2  ..
°1320 °
°1321 ° C1 DAY-ASSIGN-SCH (1,24) (WINTER-OP)  ..
°1322 ° C2 DAY-ASSIGN-SCH (1,24) (SUMMER-OP)  ..
°1323 ° CHLR-CTRL SCHEDULE THRU MAY 15 (ALL) C1
°1324 °                    THRU SEP 15 (ALL) C2
°1325 °                    THRU DEC 31 (ALL) C1  ..
°1326 °
°1327 ° LOAD-MANAGEMENT  PRED-LOAD-RANGE 999
```

```
*1328 *                    ASSIGN-SCHEDULE (HEAT-CTRL,CHLR-CTRL,DEFAULT)  ..
*1329 *
*1330 * END  ..
*1331 * COMPUTE PLANT  ..
*1332 * INPUT ECONOMICS  ..
```

```
*1333 *
*1334 *                    $ ENERGY CHARGE DESCRIPTION
*1335 *
*1336 * $ THE ELECTRIC UTILITY RATE CONSISTES OF A BLOCK CHARGE WITH A RATE CHANGE
*1337 * $ BASED ON THE DEMAND BEING ABOVE OR BELOW 2400KW, PLUS A
*1338 * $ UNIFORM DEMAND CHARGE.  HOWEVER, BECAUSE THE BUILDING HAS A POOR POWER
*1339 * $ FACTOR, THE UTILITY HAS LEVIED AN EXCESS KVAR FRACTION OF .2 SINCE IT
*1340 * $ HAS BEEN DETERMINED THAT THE POWER FACTOR IS ONLY .79, WHEREAS THIS TYPE OF
*1341 * $ BUILDING SHOULD BE OPERATING AT WITH A POWER FACTOR OF 0.9.  THERE IS
*1342 * $ RATCHET OF .9 BASED ON THE AVERAGE OF THE THREE HIGHEST PEAKS THAT OCCUR
*1343 * $ DURING THE YEAR.
*1344 *
*1345 * $ THE GAS UTILITY CHARGES ARE BASED ON A RATE OF 55 CENTS/THERM IF THE
*1346 * $ MONTHLY DEMAND IS LESS THAN 110 THERMS/HR AND 70 CENTS WHEN IT IS OVER THAT.
*1347 *
*1348 *
*1349 * ECONOMICS-REPORT  S=(ES-D,ES-E,ES-F)  ..
*1350 *
*1351 * <THAN-2000KW = UTILITY-RATE RESOURCE = ELECTRICITY
*1352 *                              DEMAND-CHGS     = (10)
*1353 *                              RATE-LIMITATION = .10
*1354 *                              DEMAND-QUALS  = (0,2400)
*1355 *                              QUALIFY-RATE  = MONTH-BY-MONTH
*1356 *                              BLOCK-CHARGES = (HIGH-COST)
*1357 *                              DEMAND-RATCHETS = (3-MON-AVG)
*1358 *                              POWER-FACTOR    = .79
*1359 *                              EXCESS-KVAR-FRAC = .11
*1360 *                              EXCESS-KVAR-CHG = 10  ..
*1361 *
*1362 * 3-MON-AVG  = RATCHET         NUM-MONTHS = 12
*1363 *                              RATCHET-SCH = ALL-YEAR
*1364 *                              SCH-FLAG = 1
*1365 *                              TYPE = AVERAGE
*1366 *                              FRACTION = .9  ..
*1367 *
*1368 * ALL-YEAR   = SCHEDULE  THRU MAY 30 (ALL) (1,24)(0)
*1369 *                        THRU SEP 30 (ALL) (1,24)(1)
*1370 *                        THRU DEC 31 (ALL) (1,24)(0)  ..
*1371 *
*1372 * HIGH-COST  = BLOCK-CHARGE  BLOCK1-TYPE = ENERGY
*1373 *                              BLOCK1-DATA = (4000,.065,
*1374 *                                             6000,.055
*1375 *                                            10000,.045)
*1376 *                              BLOCK2-TYPE = KWH/KW
*1377 *                              BLOCK2-DATA = (500,.035,0
*1378 *                                               1,.030,0)  ..
*1379 *
*1380 * >THAN-2000KW = UTILITY-RATE RESOURCE = ELECTRICITY
*1381 *                              DEMAND-CHGS     = (10)
*1382 *                              RATE-LIMITATION = .10
*1383 *                              DEMAND-QUALS  = (2400,0)
*1384 *                              QUALIFY-RATE  = MONTH-BY-MONTH
*1385 *                              BLOCK-CHARGES = (LOW-COST)
*1386 *                              DEMAND-RATCHETS = (3-MON-AVG)
*1387 *                              POWER-FACTOR    = .79
```

```
*1388 *                                EXCESS-KVAR-FRAC = .11
*1389 *                                EXCESS-KVAR-CHG = 10  ..
*1390 *
*1391 * LOW-COST    = BLOCK-CHARGE      BLOCK1-TYPE = ENERGY
*1392 *                                BLOCK1-DATA = (4000,.055,
*1393 *                                               6000,.045
*1394 *                                              10000,.035)
*1395 *                                BLOCK2-TYPE = KWH/KW
*1396 *                                BLOCK2-DATA = (500,.030,0
*1397 *                                                 1,.025,0)  ..
*1398 *
*1399 * BELOW-110   = UTILITY-RATE     RESOURCE = NATURAL-GAS
*1400 *                                DEMAND-QUALS = (0,110)
*1401 *                                QUALIFY-RATE = MONTH-BY-MONTH
*1402 *                                ENERGY-CHG = .55  ..
*1403 *
*1404 * ABOVE-110   = UTILITY-RATE     RESOURCE = NATURAL-GAS
*1405 *                                DEMAND-QUALS = (110,0)
*1406 *                                QUALIFY-RATE = MONTH-BY-MONTH
*1407 *                                ENERGY-CHG = .70  ..
*1408 *
*1409 * END  ..
*1410 * COMPUTE ECONOMICS  ..
*1411 *
*1412 * INPUT SYSTEMS  ..
```

SYSTEM NAME	SYSTEM TYPE	ALTITUDE MULTIPLIER	FLOOR AREA (SQFT)	MAX PEOPLE
CORESYS	SZRH	1.020	388900.0	1860.

SUPPLY FAN (CFM)	ELEC (KW)	DELTA-T (F)	RETURN FAN (CFM)	ELEC (KW)	DELTA-T (F)	OUTSIDE AIR RATIO	COOLING CAPACITY (KBTU/HR)	SENSIBLE (SHR)	HEATING CAPACITY (KBTU/HR)	COOLING EIR (BTU/BTU)	HEATING EIR (BTU/BTU)
365850.	306.169	2.6	365850.	126.295	1.1	0.223	14765.264	0.672	-19423.416	0.00	0.37

ZONE NAME	SUPPLY FLOW (CFM)	EXHAUST FLOW (CFM)	FAN (KW)	MINIMUM FLOW RATIO	OUTSIDE AIR FLOW (CFM)	COOLING CAPACITY (KBTU/HR)	SENSIBLE (SHR)	EXTRACTION RATE (KBTU/HR)	HEATING CAPACITY (KBTU/HR)	ADDITION RATE (KBTU/HR)	MULTIPLIER
TZ1	10924.	0.	0.000	1.000	2550.	0.00	0.00	224.16	-353.94	-412.93	30.0
RZ1	10924.	0.	0.000	1.000	2550.	0.00	0.00	224.16	-353.94	-412.93	1.0
PLEN1	0.	0.	0.000	0.000	0.	0.00	0.00	0.00	0.00	0.00	1.0
PLEN2	0.	0.	0.000	0.000	0.	0.00	0.00	0.00	0.00	0.00	30.0
A-STORAGE	27200.	0.	0.000	1.000	2550.	0.00	0.00	558.14	-881.28	-1028.16	1.0

REPORT- SV-A SYSTEM DESIGN PARAMETERS WEATHER FILE- TRY CHICAGO

SYSTEM NAME	SYSTEM TYPE	ALTITUDE MULTIPLIER	FLOOR AREA (SQFT)	MAX PEOPLE
FANCOIL	FPFC	1.020	251124.8	2976.

SUPPLY FAN (CFM)	ELEC (KW)	DELTA-T (F)	RETURN FAN (CFM)	ELEC (KW)	DELTA-T (F)	OUTSIDE AIR RATIO	COOLING CAPACITY (KBTU/HR)	SENSIBLE (SHR)	HEATING CAPACITY (KBTU/HR)	COOLING EIR (BTU/BTU)	HEATING EIR (BTU/BTU)
811713.	0.000	0.4	0.	0.000	0.0	0.101	0.000	0.000	0.000	0.00	0.37

ZONE NAME	SUPPLY FLOW (CFM)	EXHAUST FLOW (CFM)	FAN (KW)	MINIMUM FLOW RATIO	OUTSIDE AIR FLOW (CFM)	COOLING CAPACITY (KBTU/HR)	SENSIBLE (SHR)	EXTRACTION RATE (KBTU/HR)	HEATING CAPACITY (KBTU/HR)	ADDITION RATE (KBTU/HR)	MULTIPLIER
RZ2	1166.	0.	0.134	1.000	29.	23.57	0.92	17.29	-44.78	-43.16	8.0
RZ3	675.	0.	0.078	1.000	29.	14.44	0.89	10.01	-26.86	-25.05	4.0
RZ4	1146.	0.	0.132	1.000	29.	22.82	0.93	16.98	-44.03	-42.40	8.0
RZ5	1395.	0.	0.161	1.000	29.	27.65	0.94	20.68	-53.13	-51.60	4.0
TZ2	1155.	0.	0.133	1.000	29.	23.32	0.92	17.12	-44.38	-42.75	240.0
TZ3	606.	0.	0.070	1.000	29.	13.11	0.88	8.99	-24.35	-22.51	120.0
TZ4	1129.	0.	0.130	1.000	29.	22.94	0.92	16.74	-43.42	-41.79	240.0
TZ5	1367.	0.	0.157	1.000	29.	27.12	0.94	20.26	-52.10	-50.55	120.0

31-STORY OFFICE BLDG, CHICAGO - LOAD2 RUN 4 - FOUR PIPE FANCOIL PERIMETER DOE-2.1E-001 Wed Nov 10 14:35:12 1993SDL RUN 4
VAR TEMP SINGLE ZONE INTERIOR -
REPORT- SS-D PLANT MONTHLY LOADS SUMMARY FOR PLANT1 WEATHER FILE- TRY CHICAGO

	COOLING						HEATING						ELEC	
MONTH	COOLING ENERGY (MBTU)	TIME OF MAX DY	TIME OF MAX HR	DRY-BULB TEMP	WET-BULB TEMP	MAXIMUM COOLING LOAD (KBTU/HR)	HEATING ENERGY (MBTU)	TIME OF MAX DY	TIME OF MAX HR	DRY-BULB TEMP	WET-BULB TEMP	MAXIMUM HEATING LOAD (KBTU/HR)	ELEC-TRICAL ENERGY (KWH)	MAXIMUM ELEC LOAD (KW)
JAN	73.82199	25	15	47.F	42.F	3236.050	-1040.307	4	6	3.F	3.F	-24148.729	450934.	1915.304
FEB	123.96275	25	16	27.F	22.F	3810.732	-725.996	8	7	5.F	5.F	-12569.847	419524.	1899.366
MAR	284.04797	3	15	76.F	65.F	8127.443	-276.879	1	8	28.F	27.F	-6905.583	484104.	1817.409
APR	977.75800	28	15	78.F	68.F	12680.301	-31.678	8	8	31.F	28.F	-3226.991	449190.	1788.054
MAY	1096.08435	21	14	85.F	75.F	15747.660	-6.736	10	8	42.F	40.F	-624.135	407635.	1785.427
JUN	2195.45581	21	16	82.F	72.F	17644.016	-3.955	28	8	59.F	54.F	-160.801	448213.	1785.427
JUL	3248.66187	13	16	97.F	77.F	19616.564	-1.393	6	8	64.F	58.F	-363.203	436375.	1785.427
AUG	2863.75269	16	15	85.F	73.F	17484.006	-1.155	2	8	65.F	64.F	-129.461	455831.	1785.427
SEP	1360.46155	10	15	82.F	70.F	15266.467	-2.458	22	8	34.F	31.F	-567.055	435060.	1786.948
OCT	656.14038	5	16	74.F	62.F	10409.931	-11.162	21	8	30.F	29.F	-1159.818	421725.	1855.377
NOV	323.04776	2	15	75.F	61.F	10476.650	-225.421	29	8	29.F	27.F	-9080.154	436229.	1899.100
DEC	52.28515	10	15	41.F	35.F	3620.678	-617.199	27	8	31.F	30.F	-12491.229	471283.	1928.646
TOTAL	13255.493						-2944.338						5316124.	
MAX						19616.564						-24148.729		1928.646

MAXIMUM DAILY INTEGRATED COOLING LOAD (DES DAY) 0.000 (KBTU)
MAXIMUM DAILY INTEGRATED COOLING LOAD (WTH FILE) 198008.368 (KBTU)

	COOLING						HEATING						ELEC	
MONTH	COOLING ENERGY (MBTU)	TIME OF MAX DY	TIME OF MAX HR	DRY-BULB TEMP	WET-BULB TEMP	MAXIMUM COOLING LOAD (KBTU/HR)	HEATING ENERGY (MBTU)	TIME OF MAX DY	TIME OF MAX HR	DRY-BULB TEMP	WET-BULB TEMP	MAXIMUM HEATING LOAD (KBTU/HR)	ELEC-TRICAL ENERGY (KWH)	MAXIMUM ELEC LOAD (KW)
JAN	0.00000					0.000	-765.101	4	6	3.F	3.F	-19472.742	304977.	1318.656
FEB	0.00000					0.000	-588.209	8	7	5.F	5.F	-10725.037	288713.	1318.656
MAR	11.77368	3	15	76.F	65.F	2072.431	-218.051	1	7	28.F	26.F	-5921.586	344008.	1318.656
APR	163.65411	28	15	78.F	68.F	5806.282	-14.679	1	7	40.F	37.F	-1308.509	324820.	1318.656
MAY	132.01375	21	13	87.F	76.F	7707.107	-5.493	10	9	46.F	43.F	-265.324	296760.	1318.656
JUN	838.27191	21	15	81.F	72.F	9252.763	-3.955	28	8	59.F	54.F	-160.801	328280.	1318.656
JUL	1683.74109	19	14	90.F	75.F	11010.372	-1.393	6	8	64.F	58.F	-363.203	319141.	1318.656
AUG	1405.40552	16	15	85.F	73.F	9836.833	-1.155	2	8	65.F	64.F	-129.461	332872.	1318.656
SEP	390.45990	10	16	82.F	70.F	7082.210	-1.673	23	9	39.F	36.F	-254.046	310657.	1318.656
OCT	68.55700	5	16	74.F	62.F	3667.577	-4.535	27	9	40.F	36.F	-297.670	296327.	1318.656
NOV	62.40891	2	16	77.F	62.F	4557.225	-187.992	29	7	28.F	27.F	-7486.211	299520.	1318.656
DEC	0.01624	3	14	33.F	30.F	16.241	-503.185	27	7	31.F	30.F	-10684.330	319141.	1318.656
TOTAL	4756.305						-2295.422						3765328.	
MAX						11010.372						-19472.742		1318.656

	-----COOLING-----				---HEATING---			DAY COOLING PEAK			
	JUL 19				JAN 4			JUL 19			
HOUR	HOURLY COOLING LOAD (KBTU)	SENSIBLE HEAT RATIO	DRY-BULB TEMP	WET-BULB TEMP	HOURLY HEATING LOAD (KBTU)	DRY-BULB TEMP	WET-BULB TEMP	HOURLY COOLING LOAD (KBTU)	SENSIBLE HEAT RATIO	DRY-BULB TEMP	WET-BULB TEMP
1	0.000	0.000	79.F	72.F	0.000	6.F	6.F	0.000	0.000	79.F	72.F
2	0.000	0.000	79.F	72.F	0.000	5.F	5.F	0.000	0.000	79.F	72.F
3	0.000	0.000	78.F	72.F	0.000	4.F	4.F	0.000	0.000	78.F	72.F
4	0.000	0.000	78.F	72.F	0.000	4.F	4.F	0.000	0.000	78.F	72.F
5	0.000	0.000	77.F	72.F	0.000	3.F	3.F	0.000	0.000	77.F	72.F
6	8571.109	0.984	78.F	72.F	-19472.742	3.F	3.F	8571.109	0.984	78.F	72.F
7	9273.517	0.986	77.F	72.F	-16910.035	2.F	2.F	9273.517	0.986	77.F	72.F
8	10472.361	0.754	79.F	72.F	-14897.768	2.F	2.F	10472.361	0.754	79.F	72.F
9	10524.677	0.770	82.F	72.F	-15472.430	4.F	3.F	10524.677	0.770	82.F	72.F
10	10609.516	0.773	85.F	73.F	-13767.545	7.F	6.F	10609.516	0.773	85.F	73.F
11	10842.654	0.782	88.F	74.F	-12475.425	11.F	9.F	10842.654	0.782	88.F	74.F
12	10555.061	0.776	89.F	74.F	-11288.944	16.F	13.F	10555.061	0.776	89.F	74.F
13	11010.372	0.758	90.F	75.F	-10857.404	18.F	15.F	11010.372	0.758	90.F	75.F
14	10880.451	0.749	89.F	75.F	-9858.023	20.F	16.F	10880.451	0.749	89.F	75.F
15	10841.978	0.755	90.F	75.F	-9126.853	20.F	16.F	10841.978	0.755	90.F	75.F
16	10304.237	0.744	91.F	76.F	-8569.791	20.F	16.F	10304.237	0.744	91.F	76.F
17	9583.459	0.755	90.F	75.F	-8775.312	19.F	15.F	9583.459	0.755	90.F	75.F
18	0.000	0.000	86.F	74.F	-8933.562	16.F	13.F	0.000	0.000	86.F	74.F
19	0.000	0.000	86.F	74.F	0.000	13.F	11.F	0.000	0.000	86.F	74.F
20	0.000	0.000	80.F	72.F	0.000	11.F	9.F	0.000	0.000	80.F	72.F
21	0.000	0.000	79.F	72.F	0.000	10.F	8.F	0.000	0.000	79.F	72.F
22	0.000	0.000	77.F	71.F	0.000	11.F	9.F	0.000	0.000	77.F	71.F
23	0.000	0.000	76.F	71.F	0.000	7.F	6.F	0.000	0.000	76.F	71.F
24	0.000	0.000	74.F	70.F	0.000	6.F	5.F	0.000	0.000	74.F	70.F
	---				---			---			
SUM								123469.391			
MAX	11010.372				-19472.742						

SYSTEM-TYPE	SZRH	SQFT/TON	423.9
COOLING PEAK	28.31 (BTU/HR- SQFT)	HEATING PEAK	-50.07 (BTU/HR- SQFT)
SUPPLY AIR PEAK FLOW	0.94 (CFM/SQFT)	MIN-OA/PERSON	43.87 (CFM)
OA FRAC AT CLG PEAK	0.223	OA FRAC AT HTG PEAK	0.010

* ASTERISKS INDICATE HOURS LOADS NOT MET

REPORT- SS-A SYSTEM MONTHLY LOADS SUMMARY FOR FANCOIL WEATHER FILE- TRY CHICAGO

	COOLING						HEATING						ELEC	
MONTH	COOLING ENERGY (MBTU)	TIME OF MAX DY	TIME OF MAX HR	DRY-BULB TEMP	WET-BULB TEMP	MAXIMUM COOLING LOAD (KBTU/HR)	HEATING ENERGY (MBTU)	TIME OF MAX DY	TIME OF MAX HR	DRY-BULB TEMP	WET-BULB TEMP	MAXIMUM HEATING LOAD (KBTU/HR)	ELEC-TRICAL ENERGY (KWH)	MAXIMUM ELEC LOAD (KW)
JAN	73.82199	25	15	47.F	42.F	3236.050	-275.208	12	8	-7.F	-7.F	-5403.996	130758.	556.649
FEB	123.96275	25	16	27.F	22.F	3810.732	-137.787	4	8	7.F	6.F	-4646.200	116372.	540.711
MAR	272.27432	3	15	76.F	65.F	6055.012	-58.828	23	8	19.F	16.F	-3210.700	122616.	465.508
APR	814.10406	27	16	82.F	61.F	7605.653	-16.999	8	8	31.F	28.F	-3108.617	107651.	449.295
MAY	964.07074	20	15	76.F	67.F	8187.685	-1.244	10	8	42.F	40.F	-598.937	95676.	426.772
JUN	1357.18384	4	16	85.F	67.F	8849.107	0.000	10	8	64.F	59.F	-0.004	103215.	426.772
JUL	1564.92041	13	16	97.F	77.F	9326.570	0.000					0.000	101276.	426.772
AUG	1458.34961	19	16	90.F	71.F	8825.367	0.000	4	9	58.F	56.F	-0.004	106240.	427.699
SEP	970.00165	17	16	82.F	66.F	8328.922	-0.785	22	8	34.F	31.F	-567.055	108445.	454.591
OCT	587.58350	5	16	74.F	62.F	6742.354	-6.627	21	8	30.F	29.F	-1157.051	110198.	496.722
NOV	260.63892	8	15	60.F	49.F	6391.240	-37.429	26	8	25.F	22.F	-2965.361	121510.	564.947
DEC	52.26891	10	15	41.F	35.F	3620.678	-114.014	22	8	15.F	15.F	-3912.441	136183.	581.154
TOTAL	8499.186						-648.920						1360129.	
MAX						9326.570						-5403.996		581.154

	-----COOLING-----				---HEATING---			DAY COOLING PEAK			
	JUL 13				JAN 12			JUL 9			
HOUR	HOURLY COOLING LOAD (KBTU)	SENSIBLE HEAT RATIO	DRY-BULB TEMP	WET-BULB TEMP	HOURLY HEATING LOAD (KBTU)	DRY-BULB TEMP	WET-BULB TEMP	HOURLY COOLING LOAD (KBTU)	SENSIBLE HEAT RATIO	DRY-BULB TEMP	WET-BULB TEMP
1	0.000	0.000	76.F	66.F	0.000	5.F	4.F	0.000	0.000	78.F	68.F
2	0.000	0.000	74.F	66.F	-2259.364	3.F	2.F	0.000	0.000	76.F	68.F
3	0.000	0.000	74.F	65.F	0.000	1.F	0.F	0.000	0.000	75.F	68.F
4	0.000	0.000	73.F	62.F	-2819.349	-2.F	-3.F	0.000	0.000	73.F	67.F
5	0.000	0.000	72.F	62.F	0.000	-4.F	-5.F	0.000	0.000	72.F	66.F
6	0.000	0.000	72.F	63.F	-2685.624	-5.F	-6.F	0.000	0.000	71.F	65.F
7	4993.281	0.865	73.F	65.F	0.000	-6.F	-7.F	5301.946	0.873	75.F	68.F
8	6396.661	0.870	76.F	69.F	-5403.996	-7.F	-7.F	7128.604	0.882	77.F	69.F
9	7477.664	0.889	82.F	72.F	-1970.560	-8.F	-8.F	7541.470 *	0.888	82.F	72.F
10	7588.757	0.889	86.F	74.F	-1571.490	-7.F	-7.F	7641.616	0.888	85.F	74.F
11	7648.610	0.889	89.F	76.F	-1095.962	-4.F	-5.F	7673.164	0.889	88.F	75.F
12	7228.647	0.879	93.F	78.F	-767.344	0.F	0.F	7133.871	0.878	91.F	76.F
13	7514.749	0.882	95.F	78.F	-503.561	4.F	2.F	7899.081	0.889	92.F	75.F
14	8580.162	0.897	96.F	77.F	-185.834	6.F	4.F	8522.173	0.901	91.F	72.F
15	9326.570	0.907	97.F	77.F	-193.734	4.F	2.F	8653.564	0.903	94.F	74.F
16	7161.613	0.880	97.F	78.F	-231.440	3.F	1.F	7200.829	0.889	95.F	73.F
17	6769.182	0.876	99.F	77.F	-956.711	1.F	0.F	6959.842	0.887	97.F	73.F
18	0.000	0.000	97.F	76.F	-1327.278	-2.F	-3.F	0.000	0.000	96.F	73.F
19	0.000	0.000	95.F	75.F	0.000	-4.F	-5.F	0.000	0.000	94.F	73.F
20	0.000	0.000	93.F	75.F	0.000	-4.F	-5.F	0.000	0.000	84.F	70.F
21	0.000	0.000	90.F	74.F	0.000	-3.F	-4.F	0.000	0.000	78.F	70.F
22	0.000	0.000	87.F	73.F	0.000	-3.F	-4.F	0.000	0.000	76.F	71.F
23	0.000	0.000	86.F	73.F	0.000	-2.F	-3.F	0.000	0.000	70.F	67.F
24	0.000	0.000	85.F	73.F	-13.338	-1.F	-2.F	0.000	0.000	70.F	67.F
	---				---			---			
SUM								81656.164			
MAX	9326.570				-5403.996						

SYSTEM-TYPE	FPFC	SQFT/TON	323.1
COOLING PEAK	37.14 (BTU/HR- SQFT)	HEATING PEAK	-21.52 (BTU/HR- SQFT)
SUPPLY AIR PEAK FLOW	0.01 (CFM/SQFT)	MIN-OA/PERSON	0.05 (CFM)
OA FRAC AT CLG PEAK	0.021	OA FRAC AT HTG PEAK	0.021

* ASTERISKS INDICATE HOURS LOADS NOT MET

MESSAGE LIST FROM PLANT PROGRAM

```
**CAUTION*****************************************************************
        TOWER WILL BE DEFINED FOR CHILLERS THAT NEED IT
```

EQUIPMENT	SIZE (MBTU/H)	NUMBER INSTD	NUMBER AVAIL	SIZE (MBTU/H)	NUMBER INSTD	NUMBER AVAIL	SIZE (MBTU/H)	NUMBER INSTD	NUMBER AVAIL	SIZE (MBTU/H)	NUMBER INSTD	NUMBER AVAIL	SIZE (MBTU/H)	NUMBER INSTD	NUMBER AVAIL	SIZE (MBTU/H)	NUMBER INSTD	NUMBER AVAIL
HW-BOILER	17.000	1	1															
DHW-HEATER	0.100	1	1															
HERM-CENT-CHLR	7.800	2	2															
DBUN-CHLR	10.000	1	1															
COOLING-TWR	10.487	3	3															
HTANK-STORAGE	20.000	1	1															

HEAT-STORE-RATE = 10.000 (MBTU/H)
HEAT-SUPPLY-RATE= 12.000 (MBTU/H)

31-STORY OFFICE BLDG, CHICAGO - LOAD2 RUN 4 - FOUR PIPE FANCOIL PERIMETER DOE-2.1E-001 Wed Nov 10 14:35:12 1993PDL RUN 4
VAR TEMP SINGLE ZONE INTERIOR -

REPORT- PS-A PLANT ENERGY UTILIZATION SUMMARY WEATHER FILE- TRY CHICAGO

	SITE ENERGY												SOURCE
	2	3	4	5	6	7	8	9	10	11	12	13	14
MONTH	TOTAL HEAT LOAD (MBTU)	TOTAL COOLING LOAD (MBTU)	TOTAL ELECTR LOAD (MWH)	RCVRED ENERGY (MBTU)	WASTED RCVRABL ENERGY (MBTU)	FUEL INPUT COOLING (MBTU)	ELEC INPUT COOLING (MWH)	FUEL INPUT HEATING (MBTU)	ELEC INPUT HEATING (MWH)	FUEL INPUT ELECT (MBTU)	TOTAL FUEL INPUT (MBTU)	TOTAL SITE ENERGY (MBTU)	TOTAL SOURCE ENERGY (MBTU)
JAN	1123.4	89.9	503.2	160.5	0.0	0.0	25.7	1438.4	26.6	0.0	1438.4	3155.9	6591.5
FEB	814.6	143.6	476.4	234.3	11.1	0.0	36.2	900.1	20.7	0.0	900.1	2526.0	5778.3
MAR	364.3	308.7	556.4	263.3	226.0	0.0	63.1	158.2	9.1	0.0	158.2	2057.1	5855.5
APR	84.1	1010.2	569.9	66.3	1207.8	0.0	117.2	25.4	3.5	0.0	25.4	1970.5	5861.1
MAY	32.2	1128.8	509.8	17.2	581.8	0.0	99.3	22.7	2.8	0.0	22.7	1762.5	5242.5
JUN	31.5	2246.8	598.6	0.0	0.0	0.0	147.9	49.5	2.5	0.0	49.5	2092.4	6178.8
JUL	17.4	3318.5	654.8	0.0	0.0	0.0	217.9	27.1	0.5	0.0	27.1	2262.0	6732.4
AUG	18.6	2925.3	646.7	0.0	0.0	0.0	190.1	28.9	0.7	0.0	28.9	2235.9	6650.7
SEP	79.1	1399.4	560.3	60.1	680.5	0.0	123.7	29.6	1.6	0.0	29.6	1942.0	5767.4
OCT	47.2	684.7	517.6	33.5	906.6	0.0	94.3	20.9	1.6	0.0	20.9	1787.4	5321.0
NOV	266.1	346.9	506.7	132.4	368.3	0.0	62.3	210.8	8.2	0.0	210.8	1940.1	5399.2
DEC	709.9	69.4	515.8	129.3	0.6	0.0	23.2	908.4	21.3	0.0	908.4	2668.8	6189.9
TOTAL	3588.5	13672.2	6616.1	1096.8	3982.7	0.0	1200.9	3820.0	99.1	0.0	3820.0	26400.5	71568.4

HEATING LOADS	MBTU SUPPLIED	PCT OF TOTAL LOAD
HW-BOILER	2304.4	64.2
DHW-HEATER	182.0	5.1
DBUN-CHLR	1096.8	30.6
LOAD SATISFIED	3583.2	99.9
TOTAL LOAD ON PLANT	3588.5	

COOLING LOADS	MBTU SUPPLIED	PCT OF TOTAL LOAD
HERM-CENT-CHLR	10056.4	73.6
DBUN-CHLR	3615.9	26.4
LOAD SATISFIED	13672.3	100.0
TOTAL LOAD ON PLANT	13672.3	

ELECTRICAL LOADS	KWH SUPPLIED	PCT OF TOTAL LOAD
ELECTRICITY	6616102.0	100.0
LOAD SATISFIED	6616102.0	100.0
TOTAL LOAD ON PLANT	6616099.0	

STORAGE TANK USE	MBTU STORED	MBTU RETURNED	MBTU LOST	MBTU RESIDUAL
HTANK-STORAGE	580.1	440.3	129.78	10.01

TOWER ABOVE DESIGN TEMPERATURE OF 85.F 0 HOURS

SUMMARY OF LOADS MET

TYPE OF LOAD	TOTAL LOAD (MBTU)	LOAD SATISFIED (MBTU)	TOTAL OVERLOAD (MBTU)	PEAK OVERLOAD (MBTU)	HOURS OVERLOADED
HEATING LOADS	3588.5	3583.2	9.110	3.910	527
COOLING LOADS	13672.3	13672.3	93.174	3.832	111
ELECTRICAL LOADS	22580.5	22580.6	0.000	0.000	0

ENERGY TYPE: UNITS: MBTU	ELECTRICITY	NATURAL-GAS	RECOVERED
CATEGORY OF USE			
AREA LIGHTS	8817.5	0.0	0.0
MISC EQUIPMT	3997.2	0.0	0.0
SPACE HEAT	161.7	3545.9	1085.2
SPACE COOL	3360.1	0.0	0.0
HEAT REJECT	422.7	0.0	0.0
PUMPS & MISC	492.3	0.0	0.0
VENT FANS	5329.0	0.0	0.0
DOMHOT WATER	0.0	274.0	0.0
TOTAL	22580.6	3820.0	1085.2

NOTE ABOVE FIGURES DO NOT INCLUDE THE 10.01 MBTU RESIDUAL IN THE HOT STORAGE TANK

TOTAL SITE ENERGY	26400.55 MBTU	41.2 KBTU/SQFT-YR GROSS-AREA	41.2 KBTU/SQFT-YR NET-AREA
TOTAL SOURCE ENERGY	71568.46 MBTU	111.8 KBTU/SQFT-YR GROSS-AREA	111.8 KBTU/SQFT-YR NET-AREA

PERCENT OF HOURS ANY SYSTEM ZONE OUTSIDE OF THROTTLING RANGE = 0.5
PERCENT OF HOURS ANY PLANT LOAD NOT SATISFIED = 7.3

NOTE: ENERGY IS APPORTIONED HOURLY TO ALL END-USE CATEGORIES.

REPORT- ES-D ENERGY COST SUMMARY

UTILITY-RATE	RESOURCE	METERS	METERED ENERGY UNITS/YR	TOTAL CHARGE ($)	VIRTUAL RATE ($/UNIT)	RATE USED ALL YEAR?
<THAN-2000KW	ELECTRICITY	1 2 3 4 5	992163. KWH	88966.	0.0897	NO
>THAN-2000KW	ELECTRICITY	1 2 3 4 5	5623940. KWH	486924.	0.0866	NO
BELOW-110	NATURAL-GAS	1 2 3 4 5	3622. THERM	1992.	0.5500	NO
ABOVE-110	NATURAL-GAS	1 2 3 4 5	34578. THERM	24204.	0.7000	NO
				==========		
				602087.		

ENERGY COST/GROSS BLDG AREA: 0.94
ENERGY COST/NET BLDG AREA: 0.94

31-STORY OFFICE BLDG, CHICAGO - LOAD2 RUN 4 - FOUR PIPE FANCOIL PERIMETER DOE-2.1E-001 Wed Nov 10 14:35:12 1993EDL RUN 4
VAR TEMP SINGLE ZONE INTERIOR -
REPORT- ES-E SUMMARY OF UTILITY-RATE: <THAN-2000KW

UTILITY-RATE: <THAN-2000KW

RESOURCE: ELECTRICITY
METERS: 1 2 3 4 5
POWER-FACTOR: 0.79

DEMAND-WINDOW: HOUR
BILLING-DAY: 31
EXCESS-KVAR-FRAC: 0.11

3413. BTU/KWH
RATE-LIMITATION: 0.1000
EXCESS-KVAR-CHG: 10.0000

RATE-QUALIFICATIONS

MIN-ENERGY: 0.0
MAX-ENERGY: 0.0
MIN-DEMAND: 0.0
MAX-DEMAND: 2400.0
QUALIFY-RATE: MONTH-BY-MONTH
USE-MIN-QUAL: NO

BLOCK-CHARGES

HIGH-COST

DEMAND-RATCHETS

3-MON-AVG

MIN-MON-RATCHETS

MONTH	METERED ENERGY KWH	BILLING ENERGY KWH	METERED DEMAND KW	BILLING DEMAND KW	ENERGY CHARGE ($)	DEMAND CHARGE ($)	ENERGY CST ADJ ($)	TAXES ($)	SURCHRG ($)	FIXED CHARGE ($)	MINIMUM CHARGE ($)	VIRTUAL RATE ($/UNIT)	TOTAL CHARGE ($)
JAN	503235	0	2420.1	0.0	0	0	0	0	0	0	0	0.0000	0
FEB	476386	476386	2302.2	2302.2	17014	23022	0	0	0	0	0	0.0916	43623
MAR	556383	0	2458.8	0.0	0	0	0	0	0	0	0	0.0000	0
APR	569896	0	2790.8	0.0	0	0	0	0	0	0	0	0.0000	0
MAY	509752	0	2779.4	0.0	0	0	0	0	0	0	0	0.0000	0
JUN	598567	0	2780.0	0.0	0	0	0	0	0	0	0	0.0000	0
JUL	654825	0	2865.3	0.0	0	0	0	0	0	0	0	0.0000	0
AUG	646668	0	2844.7	0.0	0	0	0	0	0	0	0	0.0000	0
SEP	560331	0	2881.8	0.0	0	0	0	0	0	0	0	0.0000	0
OCT	517601	0	2720.9	0.0	0	0	0	0	0	0	0	0.0000	0
NOV	506683	0	2781.2	0.0	0	0	0	0	0	0	0	0.0000	0
DEC	515776	515776	2331.7	2331.7	18392	23317	0	0	0	0	0	0.0879	45343
TOTAL	6616102	992163	2881.8		35406	46340	0	0	0	0		0.0134	88966

REPORT- ES-F BLOCK-CHARGE AND RATCHET SUMMARY FOR: <THAN-2000KW

UTILITY-RATE: <THAN-2000KW
RESOURCE: ELECTRICITY
ENERGY-UNITS: KWH
DEMAND-UNITS: KW
DEMAND-WINDOW: HOUR

BLOCK-CHARGES	JAN	FEB	MAR	APR	MAY	JUN	JUL	AUG	SEP	OCT	NOV	DEC	YEAR
HIGH-COST USE: YEARLY													
METERED ENERGY:	503235	476386	556383	569896	509752	598567	654825	646668	560331	517601	506683	515776	
BILLING ENERGY:	0	476386	0	0	0	0	0	0	0	0	0	515776	992163
KWH/KW DEMAND:	0.0	2302.2	0.0	0.0	0.0	0.0	0.0	0.0	0.0	0.0	0.0	2331.7	
ENERGY CHGS($):	0	17014	0	0	0	0	0	0	0	0	0	18392	35406
TOTAL ENERGY:	0	476386	0	0	0	0	0	0	0	0	0	515776	992163
TOTAL CHARGES ($):	0	17014	0	0	0	0	0	0	0	0	0	18392	35406

RATCHETS	TYPE	JAN	FEB	MAR	APR	MAY	JUN	JUL	AUG	SEP	OCT	NOV	DEC
3-MON-AVG	AVERAGE	2055.6	2055.6	2055.6	2055.6	2055.6	2055.6	2055.6	2055.6	2055.6	2055.6	2055.6	2055.6

REPORT- ES-E SUMMARY OF UTILITY-RATE: >THAN-2000KW

UTILITY-RATE: >THAN-2000KW

RESOURCE: ELECTRICITY
METERS: 1 2 3 4 5
POWER-FACTOR: 0.79

DEMAND-WINDOW: HOUR
BILLING-DAY: 31
EXCESS-KVAR-FRAC: 0.11

3413. BTU/KWH
RATE-LIMITATION: 0.1000
EXCESS-KVAR-CHG: 10.0000

RATE-QUALIFICATIONS

MIN-ENERGY: 0.0
MAX-ENERGY: 0.0
MIN-DEMAND: 2400.0
MAX-DEMAND: 0.0
QUALIFY-RATE: MONTH-BY-MONTH
USE-MIN-QUAL: NO

BLOCK-CHARGES

LOW-COST

DEMAND-RATCHETS

3-MON-AVG

MIN-MON-RATCHETS

MONTH	METERED ENERGY KWH	BILLING ENERGY KWH	METERED DEMAND KW	BILLING DEMAND KW	ENERGY CHARGE ($)	DEMAND CHARGE ($)	ENERGY CST ADJ ($)	TAXES ($)	SURCHRG ($)	FIXED CHARGE ($)	MINIMUM CHARGE ($)	VIRTUAL RATE ($/UNIT)	TOTAL CHARGE ($)
JAN	503235	503235	2420.1	2420.1	15337	24201	0	0	0	0	0	0.0861	43309
FEB	476386	0	2302.2	0.0	0	0	0	0	0	0	0	0.0000	0
MAR	556383	556383	2458.8	2458.8	16931	24588	0	0	0	0	0	0.0815	45351
APR	569896	569896	2790.8	2790.8	17337	27908	0	0	0	0	0	0.0870	49594
MAY	509752	509752	2779.4	2779.4	15533	27794	0	0	0	0	0	0.0935	47657
JUN	598567	598567	2780.0	2780.0	18197	27800	0	0	0	0	0	0.0841	50329
JUL	654825	654825	2865.3	2865.3	19885	28653	0	0	0	0	0	0.0809	53003
AUG	646668	646668	2844.7	2844.7	19640	28447	0	0	0	0	0	0.0812	52519
SEP	560331	560331	2881.8	2881.8	17050	28818	0	0	0	0	0	0.0899	50359
OCT	517601	517601	2720.9	2720.9	15768	27209	0	0	0	0	0	0.0912	47216
NOV	506683	506683	2781.2	2781.2	15441	27812	0	0	0	0	0	0.0939	47586
DEC	515776	0	2331.7	0.0	0	0	0	0	0	0	0	0.0000	0
TOTAL	6616102	5623940	2881.8		171118	273230	0	0	0	0		0.0736	486924

REPORT- ES-F BLOCK-CHARGE AND RATCHET SUMMARY FOR: >THAN-2000KW

UTILITY-RATE: >THAN-2000KW
RESOURCE: ELECTRICITY
ENERGY-UNITS: KWH
DEMAND-UNITS: KW
DEMAND-WINDOW: HOUR

BLOCK-CHARGES	JAN	FEB	MAR	APR	MAY	JUN	JUL	AUG	SEP	OCT	NOV	DEC	YEAR
LOW-COST USE: YEARLY													
METERED ENERGY:	503235	476386	556383	569896	509752	598567	654825	646668	560331	517601	506683	515776	
BILLING ENERGY:	503235	0	556383	569896	509752	598567	654825	646668	560331	517601	506683	0	5623940
KWH/KW DEMAND:	2420.1	0.0	2458.8	2790.8	2779.4	2780.0	2865.3	2844.7	2881.8	2720.9	2781.2	0.0	
ENERGY CHGS($):	15337	0	16931	17337	15533	18197	19885	19640	17050	15768	15441	0	171118
TOTAL ENERGY:	503235	0	556383	569896	509752	598567	654825	646668	560331	517601	506683	0	5623940
TOTAL CHARGES ($):	15337	0	16931	17337	15533	18197	19885	19640	17050	15768	15441	0	171118

RATCHETS	TYPE	JAN	FEB	MAR	APR	MAY	JUN	JUL	AUG	SEP	OCT	NOV	DEC
3-MON-AVG	AVERAGE	2055.6	2055.6	2055.6	2055.6	2055.6	2055.6	2055.6	2055.6	2055.6	2055.6	2055.6	2055.6

REPORT- ES-E SUMMARY OF UTILITY-RATE: BELOW-110

UTILITY-RATE: BELOW-110

RESOURCE: NATURAL-GAS
METERS: 1 2 3 4 5

DEMAND-WINDOW: HOUR
BILLING-DAY: 31

100000. BTU/THERM
RATE-LIMITATION: 0.0000

RATE-QUALIFICATIONS

MIN-ENERGY: 0.0
MAX-ENERGY: 0.0
MIN-DEMAND: 0.0
MAX-DEMAND: 110.0
QUALIFY-RATE: MONTH-BY-MONTH
USE-MIN-QUAL: NO

BLOCK-CHARGES

DEMAND-RATCHETS

MIN-MON-RATCHETS

MONTH	METERED ENERGY THERM	BILLING ENERGY THERM	METERED DEMAND THERMS	BILLING DEMAND THERMS	ENERGY CHARGE ($)	DEMAND CHARGE ($)	ENERGY CST ADJ ($)	TAXES ($)	SURCHRG ($)	FIXED CHARGE ($)	MINIMUM CHARGE ($)	VIRTUAL RATE ($/UNIT)	TOTAL CHARGE ($)
JAN	14384	0	247.5	0.0	0	0	0	0	0	0	0	0.0000	0
FEB	9001	0	164.1	0.0	0	0	0	0	0	0	0	0.0000	0
MAR	1582	1582	91.0	91.0	870	0	0	0	0	0	0	0.5500	870
APR	254	254	1.4	1.4	140	0	0	0	0	0	0	0.5500	140
MAY	227	227	1.4	1.4	125	0	0	0	0	0	0	0.5500	125
JUN	495	495	6.2	6.2	272	0	0	0	0	0	0	0.5500	272
JUL	271	271	8.6	8.6	149	0	0	0	0	0	0	0.5500	149
AUG	289	289	5.9	5.9	159	0	0	0	0	0	0	0.5500	159
SEP	296	296	5.0	5.0	163	0	0	0	0	0	0	0.5500	163
OCT	209	209	1.3	1.3	115	0	0	0	0	0	0	0.5500	115
NOV	2108	0	127.7	0.0	0	0	0	0	0	0	0	0.0000	0
DEC	9084	0	165.9	0.0	0	0	0	0	0	0	0	0.0000	0
TOTAL	38200	3622	247.5		1992	0	0	0	0	0		0.0521	1992

REPORT- ES-E SUMMARY OF UTILITY-RATE: ABOVE-110

UTILITY-RATE: ABOVE-110

RESOURCE: NATURAL-GAS
METERS: 1 2 3 4 5

DEMAND-WINDOW: HOUR
BILLING-DAY: 31

100000. BTU/THERM
RATE-LIMITATION: 0.0000

RATE-QUALIFICATIONS

MIN-ENERGY: 0.0
MAX-ENERGY: 0.0
MIN-DEMAND: 110.0
MAX-DEMAND: 0.0
QUALIFY-RATE: MONTH-BY-MONTH
USE-MIN-QUAL: NO

BLOCK-CHARGES

DEMAND-RATCHETS

MIN-MON-RATCHETS

MONTH	METERED ENERGY THERM	BILLING ENERGY THERM	METERED DEMAND THERMS	BILLING DEMAND THERMS	ENERGY CHARGE ($)	DEMAND CHARGE ($)	ENERGY CST ADJ ($)	TAXES ($)	SURCHRG ($)	FIXED CHARGE ($)	MINIMUM CHARGE ($)	VIRTUAL RATE ($/UNIT)	TOTAL CHARGE ($)
JAN	14384	14384	247.5	247.5	10069	0	0	0	0	0	0	0.7000	10069
FEB	9001	9001	164.1	164.1	6301	0	0	0	0	0	0	0.7000	6301
MAR	1582	0	91.0	0.0	0	0	0	0	0	0	0	0.0000	0
APR	254	0	1.4	0.0	0	0	0	0	0	0	0	0.0000	0
MAY	227	0	1.4	0.0	0	0	0	0	0	0	0	0.0000	0
JUN	495	0	6.2	0.0	0	0	0	0	0	0	0	0.0000	0
JUL	271	0	8.6	0.0	0	0	0	0	0	0	0	0.0000	0
AUG	289	0	5.9	0.0	0	0	0	0	0	0	0	0.0000	0
SEP	296	0	5.0	0.0	0	0	0	0	0	0	0	0.0000	0
OCT	209	0	1.3	0.0	0	0	0	0	0	0	0	0.0000	0
NOV	2108	2108	127.7	127.7	1476	0	0	0	0	0	0	0.7000	1476
DEC	9084	9084	165.9	165.9	6359	0	0	0	0	0	0	0.7000	6359
TOTAL	38200	34578	247.5		24204	0	0	0	0	0		0.6336	24204

S D L P R O C E S S O R I N P U T D A T A

Wed Nov 10 14:35:12 1993SDL RUN 5

```
*1413 * TITLE  LINE-2 * RUN 5 POWERED INDUCTION UNITS *
*1414 *        LINE-4 * SINGLE-ZONE UNIT IN BASEMENT *  ..
*1415 *
*1416 *                  $ HVAC SYSTEM DESCRIPTION
*1417 *
*1418 * $ DESIGN TEMPS  COOLING 76F  HEATING 70F
*1419 * $ SYSTEM TYPE   POWERED INDUCTION UNITS SERVE THE PERIMETER SPACES WITH
*1420 * $               PARALLEL-PIU ON THE EAST, SOUTH, AND WEST EXPOSURES AND
*1421 * $               SERIES-PIU ON THE NORTH.  THE INTERIOR IS SERVED BY STANDARD
*1422 * $               VAV BOXES WITH A MINIMUM STOP OF 20%.
*1423 *
*1424 * $               THE MAIN AIR HANDLING UNITS HAVE SUPPLY AND RETURN FANS WITH
*1425 * $               SPEED CONTROL, AND AN ECONOMIZER WITH A LIMIT TEMPERATURE
*1426 * $               OF 68F.  THE MINIMUM VENTILATION IS 20 CFM/PERSON  AND THE
*1427 * $               FANS OPERATE FROM 7AM TO 6PM WEEKDAYS.  ON NIGHTS AND ON
*1428 * $               WEEKENDS THE MAIN FANS ARE OFF BUT THE PIU FANS CAN CYCLE
*1429 * $               ON TO HOLD A MINIMUM SETPOINT OF 55F.  THE MINIMUM OUTSIDE
*1430 * $               AIR DAMPERS ARE HELD CLOSED UNTIL 8AM; HOWEVER,
*1431 * $               THE ECONOMIZER IS ACTIVE FOR OA COOLING.
*1432 *
*1433 * SYSTEMS-REPORT  S (SS-A,SS-D,SS-J)  ..
*1434 *
*1435 * FANSON  SCH THRU DEC 31 (WD) (1,5)(0) (6,7)(-999) (8,18)(1) (19,24) (0)
*1436 *                         (WEH) (1,24) (0)  ..
*1437 *
*1438 * HEAT-SETPT SCH THRU DEC 31 (WD) (1,7) (55) (8,18) (70) (19,24) (55)
*1439 *                            (WEH) (1,24) (55)  ..
*1440 * COOL-SETPT SCH THRU DEC 31 (WD) (1,7) (99) (8,18) (76) (19,24) (99)
*1441 *                            (WEH) (1,24) (99)  ..
*1442 * PIU-SETPT  SCH THRU DEC 31 (ALL) (1,24) (74)  ..
*1443 *
*1444 * COOLON SCH THRU DEC 31 (ALL) (1,24) (55)  ..
*1445 * HEATON SCH THRU DEC 31 (ALL) (1,24) (65)  ..
*1446 *
*1447 * OA-DAMP-POS SCH THRU DEC 31 (ALL) (1,8)(.01) (9,18)(-999) (19,24)(.01)   ..
*1448 *
*1449 * ENV ZONE-CONTROL  D-H-T 70  D-C-T 74  H-T-SCH HEAT-SETPT  C-T-SCH COOL-SETPT ..
*1450 *
*1451 * RZ1  Z Z-C ENV  OA-CFM/PER 15  S-O ADJUST-LOADS  TERMINAL-TYPE SVAV
*1452 *                 M-C-R .5  R-D-T 50  CFM/SQFT .9  T-TYPE REVERSE-ACTION  ..
*1453 *
*1454 * RZ2  Z  Z-C ENV   OA-CFM/PER  15  S-O ADJUST-LOADS  TERMINAL-TYPE PARALLEL-PIU
*1455 *                   INDUCED-AIR-ZONE RZ1  REHEAT-DELTA-T 50  M-C-R .2
*1456 *                   ZONE-FAN-RATIO .8  ZONE-FAN-T-SCH PIU-SETPT  ..
*1457 *
*1458 * RZ3  Z  LIKE RZ2  TERMINAL-TYPE SERIES-PIU  ZONE-FAN-RATIO 1.1 ..
*1459 * RZ4  Z  LIKE RZ2  ..
*1460 * RZ5  Z  LIKE RZ2  ..
*1461 * TZ1  Z  Z-C ENV   OA-CFM/PER 15  TERMINAL-TYPE SVAV  M-C-R .5  R-D-T 50
*1462 *                                 CFM/SQFT .7  ..
*1463 *
*1464 * TZ2  Z  Z-C ENV  OA-CFM/PER 15  TERMINAL-TYPE PARALLEL-PIU  M-C-R .2
*1465 *                  INDUCED-AIR-ZONE TZ1  R-D-T 50  ZONE-FAN-RATIO .8  ..
*1466 *
*1467 * TZ3  Z  LIKE TZ2  TERMINAL-TYPE SERIES-PIU  ZONE-FAN-RATIO 1.1  ..
```

```
*1468 * TZ4  Z  LIKE TZ2  ..
*1469 * TZ5  Z  LIKE TZ2  ..
*1470 * PLEN1  Z  Z-TYPE PLENUM  S-O ADJUST-LOADS  D-H-T 50  D-C-T 90  ..
*1471 * PLEN2  Z  Z-TYPE PLENUM  ..
*1472 * A-STORAGE  Z  Z-C ENV  AIR-CHANGES/HR 4  OA-CHANGES .5  ..
*1473 *
*1474 * MAIN   SYSTEM  S-TYPE PIU  MAX-S-T 105  MIN-S-T 55  OA-CONTROL TEMP
*1475 *                COOL-SET-T 58  MAX-HUMIDITY 55  HEAT-SET-T 60
*1476 *                SUPPLY-STATIC 5.5  S-E .55  R-S 2  R-E .51 FAN-CONTROL SPEED
*1477 *                MIN-F-R .2  COOL-CONTROL CONSTANT  F-SCH FANSON
*1478 *                N-C-C ZONE-FANS-ONLY  P-N (PLEN1,PLEN2)  R-A-P PLENUM-ZONES
*1479 *                Z-N (RZ1,RZ2,RZ3,RZ4,RZ5,TZ1,TZ2,TZ3,TZ4,TZ5,PLEN1,PLEN2)
*1480 *                MIN-AIR-SCH OA-DAMP-POS   C-SCH COOLON ECONO-LIMIT-T 68 ..
*1481 *
*1482 * BASEMT SYSTEM  S-TYPE SZRH  MAX-S-T 105  MIN-S-T 55  SUPPLY-STATIC 2.5 S-E .50
*1483 *                FAN-SCHEDULE FANSON  HEATING-SCHEDULE HEATON  C-SCH COOLON
*1484 *                ECONO-LIMIT-T 68  Z-N (A-STORAGE)  ..
*1485 *
*1486 * PLANT1  = PLANT-ASSIGNMENT  SYSTEM-NAMES = (MAIN,BASEMT)
*1487 *                             INT-ELEC-KW = 100  $ FOR ELEVATORS
*1488 *                             INT-ELEC-SCH = OCCUP
*1489 *                             DHW-SIZE=0
*1490 *                             DHW-GAL/MIN  = 2.22
*1491 *                             DHW-SCH      = OCCUP  ..
*1492 *
*1493 * OC1           =DAY-SCHEDULE        (1,8) (0.)          (9,10) (1.)
*1494 *                                    (11,13) (.8,.4,.8)  (14,24) (1.,1.,1.,
*1495 *                                                  .3,.1,.1,.1,0.,0.,0.,0.)  ..
*1496 * OC2           =DAY-SCHEDULE        (1,24) (0.0)  ..
*1497 * PEOPLE        =WEEK-SCHEDULE       (MON,FRI)  OC1      (WEH)  OC2  ..
*1498 * OCCUP         =SCHEDULE            THRU DEC 31  PEOPLE   ..
*1499 * END  ..
*1500 * COMPUTE SYSTEMS  ..
*1501 * INPUT PLANT  ..
```

```
°1502 ° PLANT1 = PLANT-ASSIGNMENT  ..
°1503 °
°1504 °                    $  PLANT DESCRIPTION
°1505 °
°1506 ° $ THIS IS A COGENERATION PLANT THAT SELLS ELECTRICITY TO THE UTILITY AND
°1507 ° $ BUYS IT ON A SIMPLE BUY/SELL ARRANGEMENT.  THE UTILITY PAYS 100000 DOLLARS/YR
°1508 ° $ TO THE BUILDING OWNER UNDER
°1509 ° $ THE AGREEMENT THAT THE BUILDING WILL RUN TWO 750KW GENERATORS
°1510 ° $ FULL-OUT DURING THE ON PEAK HOURS OF 12NOON TILL 6PM.  AN ABSORPTION CHILLER
°1511 ° $ RECOVERS THE HEAT REJECTED BY THE GENERATORS.  A CENTRIFUGAL CHILLER SERVES
°1512 ° $ TO HELP BALANCE OFF THERMAL WITH ELECTRICAL LOADS.  SPACE HEATING IS DONE BY
°1513 ° $ RECOVERED HEAT, WITH A HOT WATER GENERATOR AS A SUPPLEMENTAL SOURCE.  ONE
°1514 ° $ DIESEL GENERATOR IS HELD IN RESERVE TO COVER THE DOWN TIME DUE TO MAINTENANCE
°1515 ° $ ON THE GENERATION SYSTEM, AND THUS INSURE THAT TWO GENERATORS ARE AVAILABLE
°1516 ° $ TO MEET THE CAPACITY AGREEMENT.  THE ENGINES ARE NATURAL-GAS OTTO CYCLE EVEN
°1517 ° $ THOUGH REFERRED TO AS DIESEL.
°1518 °
°1519 ° PLANT-REPORT  S (PS-A,PS-B,BEPS)  ..
°1520 °
°1521 ° HWG  P-E  TYPE  HW-BOILER  I-N 1  SIZE 10.  ..
°1522 ° CHL  P-E  TYPE  HERM-CENT-CHLR  I-N 1  SIZE 10.  ..
°1523 ° ABS  P-E  TYPE  ABSOR1-CHLR  I-N 1  SIZE 10.  ..
°1524 ° CTW  P-E  TYPE  COOLING-TWR  SIZE -999  ..
°1525 ° COG  P-E  TYPE  DIESEL-GEN  SIZE 2.56  I-N 3  MAX-NUMBER-AVAIL 2
°1526 °                 FUEL-METER = M2 ..  $ SEE ENERGY-RESOURCE BELOW
°1527 °
°1528 ° PLANT-PARAMETERS  HW-BOILER-HIR 1.33
°1529 °                   COGEN-TRACK-SCH=DIESEL-CTRL
°1530 °                   MIN-TRACK-LOAD  3   DIESEL-TRACK-MODE=TRACK-BOTH
°1531 °                   CCIRC-SIZE-OPT=INST-PLANT-EQUIP  HCIRC-SIZE-OPT=SYSTEM-PEAK
°1532 °                   CCIRC-PUMP-TYPE=VARIABLE-SPEED  ..
°1533 °
°1534 ° DIESEL-CTRL SCH THRU DEC 31 (WD) (1,7) (0) (8,12) (3)  $ 3 = TRACK-LESSER
°1535 °                                  (13,18) (5)           $ 5 = MAX-OUTPUT
°1536 °                                  (19,24) (0)           $ 0 = DO NOT RUN
°1537 °                            (WEH) (1,24) (0)  ..
°1538 °
°1539 ° HEAT-RECOVERY  SUPPLY-1  (DIESEL-GEN,DIESEL-JACKET)
°1540 °                DEMAND-1  (SPACE-HEAT,PROCESS-HEAT)
°1541 °                SUPPLY-2  (DIESEL-GEN,DIESEL-JACKET)
°1542 °                DEMAND-2  (ABSOR1-CHLR)  ..
°1543 °
°1544 ° PART-LOAD-RATIO  TYPE HERM-CENT-CHLR  E-I-R .235  ..
°1545 °
°1546 ° ENERGY-RESOURCE  RESOURCE=ELECTRICITY  ..
°1547 ° ENERGY-RESOURCE  RESOURCE=NATURAL-GAS  FUEL-METERS=(M1)  ..
°1548 ° ENERGY-RESOURCE  RESOURCE=OTHER-FUEL   FUEL-METERS=(M2)
°1549 °                  ENERGY/UNIT = 90000  $ LOW HEAT VALUE FOR A COMBUSTION ENGINE
°1550 °                  UNIT-NAME = THERMS
°1551 °                  DEM-UNIT-NAME = THERMS/HR
°1552 °                  OTHER-FUEL-NAME = COGEN-GAS  ..
°1553 ° END  ..
°1554 ° COMPUTE PLANT  ..
°1555 ° INPUT ECONOMICS  ..
```

```
*1556 *
*1557 *                    $ ENERGY CHARGE DESCRIPTION
*1558 *
*1559 * $ THIS IS A BLOCK RATE STRUCTURE WITH ENERGY CHARGES SWITCHING TO KWH/KW CHARGES
*1560 * $ WITH INCREASING USAGE. THERE IS A UNIFORM DEMAND CHARGE OF 8.00 DOLLARS/KW.
*1561 * $ THERE IS A RATCHET BASED ON THE HIGHEST PEAK DURING THREE SUMMER MONTHS.
*1562 * $ THE ELECTRICITY THAT IS SOLD IS AT A FLAT RATE OF 8 CENTS/KWH.  THERE IS
*1563 * $ A 100000 DOLLAR CAPACITY PAYMENT BY THE UTILITY IN RETURN FOR THE OWNER'S
*1564 * $ AGREEMENT TO OPERATE AT 1500KW CAPACITY (2 GENERATORS FULL-OUT) 5 DAYS A
*1565 * $ WEEK FROM 12NOON TILL 6PM.  TO ACCOUNT FOR THE ADDITIONAL COSTS (OVER A
*1566 * $ CONVENTIONAL PLANT) OF HAVING IMMEDIATELY AVAILABLE DIESEL MAINTENANCE FOR
*1567 * $ THE ENGINE/GENERATORS, THE INCOME FROM THE CAPACITY PAYMENT IS REDUCED FROM
*1568 * $ 100000 DOLLARS TO 76000 DOLLARS. NOTE THAT THIS ADJUSTMENT MAY BE MADE
*1569 * $ AS A MONTHLY CHARGE TO THE UTILITY IN DOE2.1E.  THE NATURAL GAS USED BY
*1570 * $ THE COGENERATORS IS CHARGED AT A LOWER COST THAN THAT FOR HEATING GAS.
*1571 *
*1572 * ECONOMICS-REPORT  S (ES-D,ES-E,ES-F)  ..
*1573 *
*1574 * ELEC-COST    = UTILITY-RATE   RESOURCE = ELECTRICITY
*1575 *                               MIN-MON-CHGS = (1200)
*1576 *                               DEMAND-CHGS  = (8)
*1577 *                               DEMAND-RATCHETS = (SUMMER-PEAK)
*1578 *                               BLOCK-CHARGES = (PURCHASED-ELEC)  ..
*1579 *
*1580 * PURCHASED-ELEC = BLOCK-CHARGE BLOCK1-TYPE = ENERGY
*1581 *                               BLOCK1-DATA = (3000,.04,
*1582 *                                              7000,.035,
*1583 *                                                 1,.030)
*1584 *                               BLOCK2-TYPE = KWH/KW
*1585 *                               BLOCK2-DATA = (100,.035,0
*1586 *                                              100,.025,0
*1587 *                                                1,.020,0)  ..
*1588 * SUMMER-PEAK    = RATCHET      NUM-MONTHS = 12
*1589 *                               RATCHET-SCH = JUN-SEP
*1590 *                               SCH-FLAG = 1
*1591 *                               TYPE = HIGHEST-PEAK
*1592 *                               FRACTION = .9  ..
*1593 *
*1594 * JUN-SEP = SCHEDULE  THRU MAY 31 (ALL) (1,24) (0)
*1595 *                     THRU SEP 30 (ALL) (1,24) (1)
*1596 *                     THRU DEC 31 (ALL) (1,24) (0)  ..
*1597 *
*1598 * GENERATED-POWER = UTILITY-RATE  RESOURCE = ELEC-BUY/SELL
*1599 *                                 MONTH-CHGS = (6333)  $76000/12 CAPACITY PMT
*1600 *                                 ENERGY-CHG = .08  ..
*1601 *
*1602 * GAS-COST1    = UTILITY-RATE   RESOURCE = OTHER-FUEL  $ NATURAL-GAS USING
*1603 *                                                      $ LOW HEAT VALUE
*1604 *                               ENERGY-CHG = .45  ..
*1605 *
*1606 * GAS-COST2    = UTILITY-RATE   RESOURCE = NATURAL-GAS
*1607 *                               ENERGY-CHG = .50  ..
*1608 *
*1609 *
*1610 * END  ..
```

°1611 ° COMPUTE ECONOMICS ..
°1612 ° INPUT SYSTEMS ..

SYSTEM NAME	SYSTEM TYPE	ALTITUDE MULTIPLIER	FLOOR AREA (SQFT)	MAX PEOPLE
MAIN	PIU	1.020	620024.8	4836.

SUPPLY FAN (CFM)	ELEC (KW)	DELTA-T (F)	RETURN FAN (CFM)	ELEC (KW)	DELTA-T (F)	OUTSIDE AIR RATIO	COOLING CAPACITY (KBTU/HR)	SENSIBLE (SHR)	HEATING CAPACITY (KBTU/HR)	COOLING EIR (BTU/BTU)	HEATING EIR (BTU/BTU)
858293.	987.633	3.6	858293.	387.307	1.4	0.086	33750.098	0.674	-2514.050	0.00	0.37

ZONE NAME	SUPPLY FLOW (CFM)	EXHAUST FLOW (CFM)	FAN (KW)	MINIMUM FLOW RATIO	OUTSIDE AIR FLOW (CFM)	COOLING CAPACITY (KBTU/HR)	SENSIBLE (SHR)	EXTRACTION RATE (KBTU/HR)	HEATING CAPACITY (KBTU/HR)	ADDITION RATE (KBTU/HR)	MULTIPLIER
RZ1	10924.	0.	0.000	0.500	918.	0.00	0.00	224.16	0.00	-412.93	1.0
TZ1	8497.	0.	0.000	0.500	918.	0.00	0.00	174.35	0.00	-160.59	30.0
PLEN1	0.	0.	0.000	0.000	0.	0.00	0.00	0.00	0.00	0.00	1.0
PLEN2	0.	0.	0.000	0.000	0.	0.00	0.00	0.00	0.00	0.00	30.0
RZ2	859.	0.	0.000	0.200	61.	0.00	0.00	17.63	-37.12	-38.76	8.0
RZ3	498.	0.	0.000	0.200	61.	0.00	0.00	10.64	-24.18	-25.45	4.0
RZ4	844.	0.	0.000	0.200	61.	0.00	0.00	17.32	-36.47	-38.07	8.0
RZ5	1028.	0.	0.000	0.200	61.	0.00	0.00	21.09	-44.40	-46.36	4.0
TZ2	843.	0.	0.000	0.200	61.	0.00	0.00	17.31	-36.44	-38.23	240.0
TZ3	439.	0.	0.000	0.200	61.	0.00	0.00	9.38	-21.32	-22.55	120.0
TZ4	824.	0.	0.000	0.200	61.	0.00	0.00	16.91	-35.60	-37.35	240.0
TZ5	999.	0.	0.000	0.200	61.	0.00	0.00	20.50	-43.16	-45.29	120.0

ZONE NAME	FAN FLOW (CFM)	SUPPLY FLOW (CFM)	MIN FLOW RATIO	REHEAT DELTA-T (F)	FAN DELTA-T (F)	FAN KW
RZ1	0.	10924.	0.500	50.0	0.00	0.000
TZ1	0.	8497.	0.500	50.0	0.00	0.000
PLEN1	0.	0.	0.000	0.0	0.00	0.000
PLEN2	0.	0.	0.000	0.0	0.00	0.000
RZ2	687.	859.	0.200	50.0	1.02	0.227
RZ3	547.	498.	0.200	50.0	1.02	0.181
RZ4	675.	844.	0.200	50.0	1.02	0.223
RZ5	822.	1028.	0.200	50.0	1.02	0.271
TZ2	675.	843.	0.200	50.0	1.02	0.223
TZ3	483.	439.	0.200	50.0	1.02	0.159
TZ4	659.	824.	0.200	50.0	1.02	0.218
TZ5	799.	999.	0.200	50.0	1.02	0.264

REPORT- SV-A SYSTEM DESIGN PARAMETERS WEATHER FILE- TRY CHICAGO

SYSTEM NAME	SYSTEM TYPE	ALTITUDE MULTIPLIER	FLOOR AREA (SQFT)	MAX PEOPLE
BASEMT	SZRH	1.020	20000.0	0.

SUPPLY FAN (CFM)	ELEC (KW)	DELTA-T (F)	RETURN FAN (CFM)	ELEC (KW)	DELTA-T (F)	OUTSIDE AIR RATIO	COOLING CAPACITY (KBTU/HR)	SENSIBLE (SHR)	HEATING CAPACITY (KBTU/HR)	COOLING EIR (BTU/BTU)	HEATING EIR (BTU/BTU)
27200.	15.649	1.8	0.	0.000	0.0	0.125	972.577	0.713	-1219.418	0.00	0.37

ZONE NAME	SUPPLY FLOW (CFM)	EXHAUST FLOW (CFM)	FAN (KW)	MINIMUM FLOW RATIO	OUTSIDE AIR FLOW (CFM)	COOLING CAPACITY (KBTU/HR)	SENSIBLE (SHR)	EXTRACTION RATE (KBTU/HR)	HEATING CAPACITY (KBTU/HR)	ADDITION RATE (KBTU/HR)	MULTIPLIER
A-STORAGE	27200.	0.	0.000	1.000	3400.	0.00	0.00	558.14	0.00	-1028.16	1.0

REPORT- SS-D PLANT MONTHLY LOADS SUMMARY FOR PLANT1 WEATHER FILE- TRY CHICAGO

	COOLING						HEATING						ELEC	
MONTH	COOLING ENERGY (MBTU)	TIME OF MAX DY	TIME OF MAX HR	DRY-BULB TEMP	WET-BULB TEMP	MAXIMUM COOLING LOAD (KBTU/HR)	HEATING ENERGY (MBTU)	TIME OF MAX DY	TIME OF MAX HR	DRY-BULB TEMP	WET-BULB TEMP	MAXIMUM HEATING LOAD (KBTU/HR)	ELEC-TRICAL ENERGY (KWH)	MAXIMUM ELEC LOAD (KW)
JAN	0.00000					0.000	-1237.450	4	9	4.F	3.F	-16123.612	382257.	1686.829
FEB	0.00000					0.000	-847.431	8	9	13.F	11.F	-11107.875	352186.	1633.864
MAR	87.18318	3	15	76.F	65.F	7958.514	-518.056	1	8	28.F	27.F	-9422.837	406020.	1567.994
APR	527.50043	28	15	78.F	68.F	10980.509	-107.753	5	8	34.F	30.F	-7725.423	379815.	1653.295
MAY	545.02783	21	14	85.F	75.F	14689.465	-19.518	10	8	42.F	40.F	-2854.207	350061.	1688.006
JUN	1862.96948	21	16	82.F	72.F	18002.160	-0.491	25	8	55.F	49.F	-256.868	405111.	1953.609
JUL	3118.74927	13	16	97.F	77.F	20802.381	0.000					0.000	426776.	2054.042
AUG	2654.75610	16	15	85.F	73.F	17721.020	0.000					0.000	422054.	1943.081
SEP	956.96442	10	15	82.F	70.F	15093.584	-9.076	29	8	47.F	44.F	-1737.429	374233.	1751.166
OCT	333.26004	5	16	74.F	62.F	9128.977	-65.393	21	8	30.F	29.F	-4827.550	356729.	1561.852
NOV	135.69865	2	15	75.F	61.F	8814.735	-458.315	29	8	29.F	27.F	-11314.007	373152.	1681.667
DEC	0.00000					0.000	-908.252	13	8	34.F	34.F	-11349.360	401484.	1704.223
TOTAL	10222.097						-4171.730						4629860.	
MAX						20802.381						-16123.612		2054.042

MAXIMUM DAILY INTEGRATED COOLING LOAD (DES DAY) 0.000 (KBTU)
MAXIMUM DAILY INTEGRATED COOLING LOAD (WTH FILE) 189884.336 (KBTU)

	COOLING						HEATING						ELEC	
MONTH	COOLING ENERGY (MBTU)	TIME OF MAX DY	TIME OF MAX HR	DRY-BULB TEMP	WET-BULB TEMP	MAXIMUM COOLING LOAD (KBTU/HR)	HEATING ENERGY (MBTU)	TIME OF MAX DY	TIME OF MAX HR	DRY-BULB TEMP	WET-BULB TEMP	MAXIMUM HEATING LOAD (KBTU/HR)	ELEC-TRICAL ENERGY (KWH)	MAXIMUM ELEC LOAD (KW)
JAN	0.00000					0.000	-1203.637	4	9	4.F	3.F	-15632.481	355486.	1602.679
FEB	0.00000					0.000	-815.869	8	9	13.F	11.F	-10838.659	326781.	1549.715
MAR	87.18318	3	15	76.F	65.F	7958.514	-494.412	1	8	28.F	27.F	-9200.246	375395.	1483.845
APR	527.50043	28	15	78.F	68.F	10980.509	-101.984	5	8	34.F	30.F	-7599.096	350642.	1510.646
MAY	542.98151	21	14	85.F	75.F	14531.375	-19.492	10	8	42.F	40.F	-2834.157	323463.	1603.857
JUN	1850.04675	21	16	82.F	72.F	17856.029	-0.491	25	8	55.F	49.F	-256.868	376000.	1810.960
JUL	3082.54346	13	16	97.F	77.F	20537.863	0.000					0.000	398903.	1949.756
AUG	2621.60059	16	15	85.F	73.F	17509.277	0.000					0.000	392907.	1858.931
SEP	947.20508	10	15	82.F	70.F	14901.445	-9.052	29	8	47.F	44.F	-1737.429	346396.	1630.014
OCT	331.25348	5	16	74.F	62.F	9028.915	-65.359	21	8	30.F	29.F	-4827.550	330130.	1470.691
NOV	134.88367	2	15	75.F	61.F	8738.739	-453.729	29	8	29.F	27.F	-11185.349	346573.	1588.405
DEC	0.00000					0.000	-889.020	13	8	34.F	34.F	-11202.080	373533.	1620.074
TOTAL	10125.199						-4053.044						4296195.	
MAX						20537.863						-15632.481		1949.756

	-----COOLING-----				---HEATING---			DAY COOLING PEAK			
	JUL 13				JAN 4			JUL 19			
HOUR	HOURLY COOLING LOAD (KBTU)	SENSIBLE HEAT RATIO	DRY-BULB TEMP	WET-BULB TEMP	HOURLY HEATING LOAD (KBTU)	DRY-BULB TEMP	WET-BULB TEMP	HOURLY COOLING LOAD (KBTU)	SENSIBLE HEAT RATIO	DRY-BULB TEMP	WET-BULB TEMP
1	0.000	0.000	76.F	66.F	-1670.524	6.F	6.F	0.000	0.000	79.F	72.F
2	0.000	0.000	74.F	66.F	-3653.295	5.F	5.F	0.000	0.000	79.F	72.F
3	0.000	0.000	74.F	65.F	-1687.074	4.F	4.F	0.000	0.000	78.F	72.F
4	0.000	0.000	73.F	62.F	-3507.587	4.F	4.F	0.000	0.000	78.F	72.F
5	0.000	0.000	72.F	62.F	-1657.369	3.F	3.F	0.000	0.000	77.F	72.F
6	0.000	0.000	72.F	63.F	-3561.678	3.F	3.F	0.000	0.000	78.F	72.F
7	12058.387	0.989	73.F	65.F	-1400.479	2.F	2.F	12560.731	0.969	77.F	72.F
8	14764.851	0.844	76.F	69.F	-15244.163	2.F	2.F	16477.699	0.823	79.F	72.F
9	16525.201	0.834	82.F	72.F	-15632.481	4.F	3.F	16468.438	0.836	82.F	72.F
10	17119.006	0.835	86.F	74.F	-12360.225	7.F	6.F	18115.656	0.852	85.F	73.F
11	17599.635	0.833	89.F	76.F	-11139.708	11.F	9.F	17752.053	0.863	88.F	74.F
12	17486.299	0.806	93.F	78.F	-11122.410	16.F	13.F	17404.672	0.852	89.F	74.F
13	18198.188	0.807	95.F	78.F	-9763.665	18.F	15.F	18273.781	0.836	90.F	75.F
14	19386.039	0.834	96.F	77.F	-8776.635	20.F	16.F	19120.990	0.835	89.F	75.F
15	20537.863	0.843	97.F	77.F	-8358.760	20.F	16.F	19487.562	0.841	90.F	75.F
16	16532.377	0.833	97.F	78.F	-7853.238	20.F	16.F	16584.971	0.845	91.F	76.F
17	15300.540	0.858	99.F	77.F	-8693.424	19.F	15.F	15388.331	0.854	90.F	75.F
18	0.000	0.000	97.F	76.F	-9477.547	16.F	13.F	0.000	0.000	86.F	74.F
19	0.000	0.000	95.F	75.F	0.000	13.F	11.F	0.000	0.000	86.F	74.F
20	0.000	0.000	93.F	75.F	0.000	11.F	9.F	0.000	0.000	80.F	72.F
21	0.000	0.000	90.F	74.F	0.000	10.F	8.F	0.000	0.000	79.F	72.F
22	0.000	0.000	87.F	73.F	-11.765	11.F	9.F	0.000	0.000	77.F	71.F
23	0.000	0.000	86.F	73.F	-80.960	7.F	6.F	0.000	0.000	76.F	71.F
24	0.000	0.000	85.F	73.F	-1094.934	6.F	5.F	0.000	0.000	74.F	70.F
	---				---			---			
SUM								187634.906			
MAX	20537.863				-15632.481						

SYSTEM-TYPE	PIU	SQFT/TON	362.3
COOLING PEAK	33.12 (BTU/HR- SQFT)	HEATING PEAK	-25.21 (BTU/HR- SQFT)
SUPPLY AIR PEAK FLOW	1.38 (CFM/SQFT)	MIN-OA/PERSON	15.30 (CFM)
OA FRAC AT CLG PEAK	0.113	OA FRAC AT HTG PEAK	0.288

* ASTERISKS INDICATE HOURS LOADS NOT MET

REPORT- SS-A SYSTEM MONTHLY LOADS SUMMARY FOR BASEMT WEATHER FILE- TRY CHICAGO

	COOLING						HEATING						ELEC	
MONTH	COOLING ENERGY (MBTU)	TIME OF MAX DY	TIME OF MAX HR	DRY-BULB TEMP	WET-BULB TEMP	MAXIMUM COOLING LOAD (KBTU/HR)	HEATING ENERGY (MBTU)	TIME OF MAX DY	TIME OF MAX HR	DRY-BULB TEMP	WET-BULB TEMP	MAXIMUM HEATING LOAD (KBTU/HR)	ELEC-TRICAL ENERGY (KWH)	MAXIMUM ELEC LOAD (KW)
JAN	0.00000					0.000	-33.812	4	7	2.F	2.F	-587.128	11571.	44.149
FEB	0.00000					0.000	-31.562	8	7	5.F	5.F	-355.601	10965.	44.149
MAR	0.00000					0.000	-23.644	1	7	28.F	26.F	-270.828	13145.	44.149
APR	0.00000					0.000	-5.769	19	7	38.F	36.F	-177.325	12454.	44.149
MAY	2.04638	21	13	87.F	76.F	168.097	-0.025	10	8	42.F	40.F	-20.050	11399.	44.149
JUN	12.92317	9	15	83.F	73.F	187.738	0.000					0.000	12391.	44.149
JUL	36.20378	13	17	97.F	78.F	280.640	0.000					0.000	11913.	44.149
AUG	33.15545	26	17	94.F	76.F	272.747	0.000					0.000	12427.	44.149
SEP	9.75948	10	17	83.F	70.F	197.234	-0.023	22	8	34.F	31.F	-13.567	11877.	44.149
OCT	2.00658	5	17	74.F	62.F	102.455	-0.034	1	8	33.F	32.F	-14.379	11399.	44.149
NOV	0.81498	2	16	77.F	62.F	86.146	-4.586	29	7	28.F	27.F	-173.721	11379.	44.149
DEC	0.00000					0.000	-19.232	27	7	31.F	30.F	-245.970	11991.	44.149
TOTAL	96.910						-118.687						142910.	
MAX						280.640						-587.128		44.149

	-----COOLING-----				---HEATING---			DAY COOLING PEAK			
	JUL 13				JAN 4			JUL 13			
HOUR	HOURLY COOLING LOAD (KBTU)	SENSIBLE HEAT RATIO	DRY-BULB TEMP	WET-BULB TEMP	HOURLY HEATING LOAD (KBTU)	DRY-BULB TEMP	WET-BULB TEMP	HOURLY COOLING LOAD (KBTU)	SENSIBLE HEAT RATIO	DRY-BULB TEMP	WET-BULB TEMP
1	0.000	0.000	76.F	66.F	0.000	6.F	6.F	0.000	0.000	76.F	66.F
2	0.000	0.000	74.F	66.F	0.000	5.F	5.F	0.000	0.000	74.F	66.F
3	0.000	0.000	74.F	65.F	0.000	4.F	4.F	0.000	0.000	74.F	65.F
4	0.000	0.000	73.F	62.F	0.000	4.F	4.F	0.000	0.000	73.F	62.F
5	0.000	0.000	72.F	62.F	0.000	3.F	3.F	0.000	0.000	72.F	62.F
6	0.000	0.000	72.F	63.F	0.000	3.F	3.F	0.000	0.000	72.F	63.F
7	128.236	0.813	73.F	65.F	-587.128	2.F	2.F	128.236	0.813	73.F	65.F
8	165.358	0.699	76.F	69.F	-513.023	2.F	2.F	165.358	0.699	76.F	69.F
9	199.268	0.692	82.F	72.F	-491.131	4.F	3.F	199.268	0.692	82.F	72.F
10	222.894	0.682	86.F	74.F	-458.178	7.F	6.F	222.894	0.682	86.F	74.F
11	245.745	0.664	89.F	76.F	-424.909	11.F	9.F	245.745	0.664	89.F	76.F
12	264.139	0.645	93.F	78.F	-389.149	16.F	13.F	264.139	0.645	93.F	78.F
13	265.284	0.668	95.F	78.F	-372.783	18.F	15.F	265.284	0.668	95.F	78.F
14	261.238	0.710	96.F	77.F	-349.642	20.F	16.F	261.238	0.710	96.F	77.F
15	264.518	0.717	97.F	77.F	-330.329	20.F	16.F	264.518	0.717	97.F	77.F
16	280.640	0.689	97.F	78.F	-316.411	20.F	16.F	280.640	0.689	97.F	78.F
17	263.184	0.734	99.F	77.F	-304.422	19.F	15.F	263.184	0.734	99.F	77.F
18	0.000	0.000	97.F	76.F	-310.118	16.F	13.F	0.000	0.000	97.F	76.F
19	0.000	0.000	95.F	75.F	0.000	13.F	11.F	0.000	0.000	95.F	75.F
20	0.000	0.000	93.F	75.F	0.000	11.F	9.F	0.000	0.000	93.F	75.F
21	0.000	0.000	90.F	74.F	0.000	10.F	8.F	0.000	0.000	90.F	74.F
22	0.000	0.000	87.F	73.F	0.000	11.F	9.F	0.000	0.000	87.F	73.F
23	0.000	0.000	86.F	73.F	0.000	7.F	6.F	0.000	0.000	86.F	73.F
24	0.000	0.000	85.F	73.F	0.000	6.F	5.F	0.000	0.000	85.F	73.F
SUM								2560.505			
MAX	280.640				-587.128						

SYSTEM-TYPE SZRH SQFT/TON 855.2
COOLING PEAK 14.03 (BTU/HR- SQFT) HEATING PEAK -29.36 (BTU/HR- SQFT)
SUPPLY AIR PEAK FLOW 1.36 (CFM/SQFT)
OA FRAC AT CLG PEAK 0.125 OA FRAC AT HTG PEAK 0.125

* ASTERISKS INDICATE HOURS LOADS NOT MET

EQUIPMENT	SIZE (MBTU/H)	NUMBER INSTD	NUMBER AVAIL	SIZE (MBTU/H)	NUMBER INSTD	NUMBER AVAIL	SIZE (MBTU/H)	NUMBER INSTD	NUMBER AVAIL	SIZE (MBTU/H)	NUMBER INSTD	NUMBER AVAIL	SIZE (MBTU/H)	NUMBER INSTD	NUMBER AVAIL	SIZE (MBTU/H)	NUMBER INSTD	NUMBER AVAIL
HW-BOILER	10.000	1	1															
HERM-CENT-CHLR	10.000	1	1															
ABSOR1-CHLR	10.000	1	1															
COOLING-TWR	12.890	3	3															
DIESEL-GEN	2.560	3	2															

	SITE ENERGY												SOURCE
	2	3	4	5	6	7	8	9	10	11	12	13	14
MONTH	TOTAL HEAT LOAD (MBTU)	TOTAL COOLING LOAD (MBTU)	TOTAL ELECTR LOAD (MWH)	RCVRED ENERGY (MBTU)	WASTED RCVRABL ENERGY (MBTU)	FUEL INPUT COOLING (MBTU)	ELEC INPUT COOLING (MWH)	FUEL INPUT HEATING (MBTU)	ELEC INPUT HEATING (MWH)	FUEL INPUT ELECT (MBTU)	TOTAL FUEL INPUT (MBTU)	TOTAL SITE ENERGY (MBTU)	TOTAL SOURCE ENERGY (MBTU)
JAN	1302.1	0.0	398.7	879.6	371.5	0.0	0.0	691.2	16.5	2916.3	3607.5	3952.3	4642.0
FEB	908.5	0.0	363.6	723.0	440.4	0.0	0.0	309.5	11.4	2720.1	3029.6	3326.4	3920.1
MAR	672.6	90.4	419.6	589.5	654.9	4.2	6.1	133.9	7.5	2904.8	3042.9	3470.0	4324.2
APR	714.1	544.2	415.1	681.2	450.0	16.2	31.4	40.5	3.8	2631.1	2687.8	3189.1	4191.8
MAY	669.5	565.3	384.8	653.6	364.8	12.1	33.3	15.5	1.5	2363.7	2391.4	2879.8	3856.8
JUN	1387.1	1907.9	513.3	1341.8	65.2	72.3	108.1	2.9	0.1	3267.1	3342.3	3952.0	5171.7
JUL	1901.7	3182.5	610.5	1484.4	0.0	642.4	183.7	0.6	0.0	3436.7	4079.7	4958.1	6715.2
AUG	1634.5	2710.9	581.2	1510.7	0.9	201.7	159.1	0.6	0.0	3506.6	3708.9	4465.2	5978.1
SEP	897.1	985.5	432.4	880.5	236.7	16.5	57.5	12.3	0.7	2592.5	2621.3	3190.9	4330.1
OCT	553.3	347.4	381.3	531.8	426.3	11.3	20.8	26.1	3.8	2223.3	2260.7	2787.4	3841.0
NOV	648.7	140.7	389.1	574.2	502.9	6.4	9.4	114.8	6.5	2510.5	2631.6	3088.5	4002.4
DEC	969.5	0.0	412.1	809.4	464.2	0.0	0.0	263.7	10.6	2976.7	3240.3	3613.8	4360.9
TOTAL	12258.5	10474.7	5301.6	10659.6	3977.8	983.1	609.4	1611.7	62.4	34049.3	36644.1	42873.5	55334.2

REPORT- PS-B MONTHLY UTILITY AND FUEL USE SUMMARY WEATHER FILE- TRY CHICAGO

MONTH	ELECTRICITY METER-1 3413./KWH	NATURAL-GAS METER-1 100000./THERM	COGEN-GAS METER-2 90000./THERMS	ELECTRICITY COGENERATION 3413./KWH
JAN				
ENERGY CONSUMPTION (UNITS/MO)	398716.6	6912.1	32403.3	297692.5
PEAK DEMAND (UNITS/HR OR DAY)	1704.3	140.9	169.8	1575.2
PEAK DAY/HR	11/12	4/ 8	4/12	4/12
FEB				
ENERGY CONSUMPTION (UNITS/MO)	363555.4	3095.4	30222.9	276595.3
PEAK DEMAND (UNITS/HR OR DAY)	1651.4	88.7	169.8	1575.2
PEAK DAY/HR	12/12	16/ 8	1/13	1/13
MAR				
ENERGY CONSUMPTION (UNITS/MO)	419612.6	1381.3	32275.5	294484.0
PEAK DEMAND (UNITS/HR OR DAY)	1892.3	78.2	169.8	1575.2
PEAK DAY/HR	3/15	1/ 8	1/13	1/13
APR				
ENERGY CONSUMPTION (UNITS/MO)	415051.1	566.8	29235.0	268182.4
PEAK DEMAND (UNITS/HR OR DAY)	2233.4	52.5	169.8	1575.2
PEAK DAY/HR	27/16	5/ 8	1/13	1/13
MAY				
ENERGY CONSUMPTION (UNITS/MO)	384806.7	276.4	26263.7	241697.6
PEAK DEMAND (UNITS/HR OR DAY)	2573.8	21.6	169.8	1575.2
PEAK DAY/HR	21/14	11/10	3/13	3/13
JUN				
ENERGY CONSUMPTION (UNITS/MO)	513303.8	751.8	36301.1	334652.3
PEAK DEMAND (UNITS/HR OR DAY)	2932.9	84.3	169.8	1575.2
PEAK DAY/HR	21/16	21/16	1/11	1/11
JUL				
ENERGY CONSUMPTION (UNITS/MO)	610511.3	6430.0	38185.4	353138.8
PEAK DEMAND (UNITS/HR OR DAY)	3071.3	144.2	169.8	1575.2
PEAK DAY/HR	13/16	13/16	1/10	1/10
AUG				
ENERGY CONSUMPTION (UNITS/MO)	581153.6	2023.1	38961.9	359546.7
PEAK DEMAND (UNITS/HR OR DAY)	2899.3	78.9	169.8	1575.2
PEAK DAY/HR	9/12	16/15	2/11	2/11
SEP				
ENERGY CONSUMPTION (UNITS/MO)	432415.8	288.3	28805.6	265542.1
PEAK DEMAND (UNITS/HR OR DAY)	2672.5	24.3	169.8	1575.2
PEAK DAY/HR	10/15	10/15	1/13	1/13
OCT				
ENERGY CONSUMPTION (UNITS/MO)	381334.0	374.4	24703.2	227007.2
PEAK DEMAND (UNITS/HR OR DAY)	2050.8	23.1	169.8	1575.2
PEAK DAY/HR	5/16	28/18	1/13	1/13
NOV				
ENERGY CONSUMPTION (UNITS/MO)	389083.6	1211.9	27894.0	255221.8
PEAK DEMAND (UNITS/HR OR DAY)	2020.1	94.7	169.8	1575.2
PEAK DAY/HR	2/15	29/ 8	1/13	1/13
DEC				
ENERGY CONSUMPTION (UNITS/MO)	412079.2	2636.7	33073.9	302646.1
PEAK DEMAND (UNITS/HR OR DAY)	1721.7	92.4	169.8	1575.2
PEAK DAY/HR	9/12	13/ 8	1/13	1/13
TOTAL				
ENERGY CONSUMPTION (UNITS/YR)	5301623.5	25948.2	378325.5	3476406.8
PEAK DEMAND (UNITS/HR OR DAY)	3071.3	144.2	169.8	1575.2

ENERGY TYPE: UNITS: MBTU	ELECTRICITY	NATURAL-GAS	COGEN-GAS	RECOVERED
CATEGORY OF USE				
AREA LIGHTS	4142.6	0.0	13457.3	0.0
MISC EQUIPMT	1259.5	0.0	7847.9	0.0
SPACE HEAT	40.0	1565.0	83.0	3477.7
SPACE COOL	435.4	983.1	2773.1	7021.8
HEAT REJECT	127.2	0.0	1077.5	0.0
PUMPS & MISC	112.6	0.0	564.8	0.0
VENT FANS	779.2	0.0	6342.9	0.0
DOMHOT WATER	1.8	46.7	1.6	160.1
COGEN SURPLS	-669.1	0.0	1901.2	0.0
TOTAL	6229.4	2594.8	34049.3	10659.6

TOTAL SITE ENERGY 42873.56 MBTU 67.0 KBTU/SQFT-YR GROSS-AREA 67.0 KBTU/SQFT-YR NET-AREA
TOTAL SOURCE ENERGY 55334.24 MBTU 86.5 KBTU/SQFT-YR GROSS-AREA 86.5 KBTU/SQFT-YR NET-AREA

PERCENT OF HOURS ANY SYSTEM ZONE OUTSIDE OF THROTTLING RANGE = 2.6
PERCENT OF HOURS ANY PLANT LOAD NOT SATISFIED = 0.0

NOTE: ENERGY IS APPORTIONED HOURLY TO ALL END-USE CATEGORIES.

RT- ES-D ENERGY COST SUMMARY

UTILITY-RATE	RESOURCE	METERS	METERED ENERGY UNITS/YR	TOTAL CHARGE ($)	VIRTUAL RATE ($/UNIT)	RATE USED ALL YEAR?
ELEC-COST	ELECTRICITY	1 2 3 4 5	5301624. KWH	437948.	0.0826	YES
GENERATED-POWER	ELEC-BUY/SELL		3476407. KWH	-354109.	-0.1019	YES
GAS-COST1	COGEN-GAS	2	378325. THERMS	170246.	0.4500	YES
GAS-COST2	NATURAL-GAS	1 3 4 5	25948. THERM	12974.	0.5000	YES
				==========		
				267060.		

ENERGY COST/GROSS BLDG AREA: 0.42
ENERGY COST/NET BLDG AREA: 0.42

REPORT- ES-F BLOCK-CHARGE AND RATCHET SUMMARY FOR: ELEC-COST

UTILITY-RATE: ELEC-COST
RESOURCE: ELECTRICITY
ENERGY-UNITS: KWH
DEMAND-UNITS: KW
DEMAND-WINDOW: HOUR

BLOCK-CHARGES	JAN	FEB	MAR	APR	MAY	JUN	JUL	AUG	SEP	OCT	NOV	DEC	YEAR
PURCHASED-ELEC USE: YEARLY													
METERED ENERGY:	398717	363555	419613	415051	384807	513304	610511	581154	432416	381334	389084	412079	
BILLING ENERGY:	398717	363555	419613	415051	384807	513304	610511	581154	432416	381334	389084	412079	5301624
KWH/KW DEMAND:	2764.1	2764.1	2764.1	2764.1	2764.1	2932.9	3071.3	2899.3	2764.1	2764.1	2764.1	2764.1	
ENERGY CHGS($):	12847	11968	13369	13255	12499	15881	18449	17543	13690	12413	12606	13181	167702
TOTAL ENERGY:	398717	363555	419613	415051	384807	513304	610511	581154	432416	381334	389084	412079	5301624
TOTAL CHARGES ($):	12847	11968	13369	13255	12499	15881	18449	17543	13690	12413	12606	13181	167702

RATCHETS	TYPE	JAN	FEB	MAR	APR	MAY	JUN	JUL	AUG	SEP	OCT	NOV	DEC
SUMMER-PEAK	HIGHEST	2764.1	2764.1	2764.1	2764.1	2764.1	2764.1	2764.1	2764.1	2764.1	2764.1	2764.1	2764.1

REPORT- ES-E SUMMARY OF UTILITY-RATE: GENERATED-POWER

UTILITY-RATE: GENERATED-POWER
RESOURCE: ELEC-BUY/SELL
METERS:
DEMAND-WINDOW: HOUR
BILLING-DAY: 31
3413. BTU/KWH
RATE-LIMITATION: 0.0000

RATE-QUALIFICATIONS

MIN-ENERGY: 0.0
MAX-ENERGY: 0.0
MIN-DEMAND: 0.0
MAX-DEMAND: 0.0
QUALIFY-RATE: ALL-MONTHS
USE-MIN-QUAL: NO

BLOCK-CHARGES

DEMAND-RATCHETS

MIN-MON-RATCHETS

MONTH	METERED ENERGY KWH	BILLING ENERGY KWH	METERED DEMAND KW	BILLING DEMAND KW	ENERGY CHARGE ($)	DEMAND CHARGE ($)	ENERGY CST ADJ ($)	TAXES ($)	SURCHRG ($)	FIXED CHARGE ($)	MINIMUM CHARGE ($)	VIRTUAL RATE ($/UNIT)	TOTAL CHARGE ($)
JAN	297693	297693	1575.2	1575.2	23815	0	0	0	0	6333	0	0.1013	30148
FEB	276595	276595	1575.2	1575.2	22128	0	0	0	0	6333	0	0.1029	28461
MAR	294484	294484	1575.2	1575.2	23559	0	0	0	0	6333	0	0.1015	29892
APR	268182	268182	1575.2	1575.2	21455	0	0	0	0	6333	0	0.1036	27788
MAY	241698	241698	1575.2	1575.2	19336	0	0	0	0	6333	0	0.1062	25669
JUN	334652	334652	1575.2	1575.2	26772	0	0	0	0	6333	0	0.0989	33105
JUL	353139	353139	1575.2	1575.2	28251	0	0	0	0	6333	0	0.0979	34584
AUG	359547	359547	1575.2	1575.2	28764	0	0	0	0	6333	0	0.0976	35097
SEP	265542	265542	1575.2	1575.2	21243	0	0	0	0	6333	0	0.1038	27576
OCT	227007	227007	1575.2	1575.2	18161	0	0	0	0	6333	0	0.1079	24494
NOV	255222	255222	1575.2	1575.2	20418	0	0	0	0	6333	0	0.1048	26751
DEC	302646	302646	1575.2	1575.2	24212	0	0	0	0	6333	0	0.1009	30545
TOTAL	3476407	3476407	1575.2		278113	0	0	0	0	75996		-0.1019	-354108

REPORT- ES-E SUMMARY OF UTILITY-RATE: GAS-COST1

UTILITY-RATE: GAS-COST1 RESOURCE: COGEN-GAS DEMAND-WINDOW: HOUR 90000. BTU/THERMS
METERS: 2 BILLING-DAY: 31 RATE-LIMITATION: 0.0000

RATE-QUALIFICATIONS

MIN-ENERGY: 0.0
MAX-ENERGY: 0.0
MIN-DEMAND: 0.0
MAX-DEMAND: 0.0
QUALIFY-RATE: ALL-MONTHS
USE-MIN-QUAL: NO

BLOCK-CHARGES

DEMAND-RATCHETS

MIN-MON-RATCHETS

MONTH	METERED ENERGY THERMS	BILLING ENERGY THERMS	METERED DEMAND THERMS/H	BILLING DEMAND THERMS/H	ENERGY CHARGE ($)	DEMAND CHARGE ($)	ENERGY CST ADJ ($)	TAXES ($)	SURCHRG ($)	FIXED CHARGE ($)	MINIMUM CHARGE ($)	VIRTUAL RATE ($/UNIT)	TOTAL CHARGE ($)
JAN	32403	32403	169.8	169.8	14581	0	0	0	0	0	0	0.4500	14581
FEB	30223	30223	169.8	169.8	13600	0	0	0	0	0	0	0.4500	13600
MAR	32275	32275	169.8	169.8	14524	0	0	0	0	0	0	0.4500	14524
APR	29235	29235	169.8	169.8	13156	0	0	0	0	0	0	0.4500	13156
MAY	26264	26264	169.8	169.8	11819	0	0	0	0	0	0	0.4500	11819
JUN	36301	36301	169.8	169.8	16335	0	0	0	0	0	0	0.4500	16335
JUL	38185	38185	169.8	169.8	17183	0	0	0	0	0	0	0.4500	17183
AUG	38962	38962	169.8	169.8	17533	0	0	0	0	0	0	0.4500	17533
SEP	28806	28806	169.8	169.8	12963	0	0	0	0	0	0	0.4500	12963
OCT	24703	24703	169.8	169.8	11116	0	0	0	0	0	0	0.4500	11116
NOV	27894	27894	169.8	169.8	12552	0	0	0	0	0	0	0.4500	12552
DEC	33074	33074	169.8	169.8	14883	0	0	0	0	0	0	0.4500	14883
TOTAL	378325	378325	169.8		170246	0	0	0	0	0		0.4500	170246

REPORT- ES-E SUMMARY OF UTILITY-RATE: GAS-COST2

UTILITY-RATE: GAS-COST2
RESOURCE: NATURAL-GAS
METERS: 1 3 4 5
DEMAND-WINDOW: HOUR
BILLING-DAY: 31
100000. BTU/THERM
RATE-LIMITATION: 0.0000

RATE-QUALIFICATIONS

MIN-ENERGY: 0.0
MAX-ENERGY: 0.0
MIN-DEMAND: 0.0
MAX-DEMAND: 0.0
QUALIFY-RATE: ALL-MONTHS
USE-MIN-QUAL: NO

BLOCK-CHARGES

DEMAND-RATCHETS

MIN-MON-RATCHETS

MONTH	METERED ENERGY THERM	BILLING ENERGY THERM	METERED DEMAND THERMS	BILLING DEMAND THERMS	ENERGY CHARGE ($)	DEMAND CHARGE ($)	ENERGY CST ADJ ($)	TAXES ($)	SURCHRG ($)	FIXED CHARGE ($)	MINIMUM CHARGE ($)	VIRTUAL RATE ($/UNIT)	TOTAL CHARGE ($)
JAN	6912	6912	140.9	140.9	3456	0	0	0	0	0	0	0.5000	3456
FEB	3095	3095	88.7	88.7	1548	0	0	0	0	0	0	0.5000	1548
MAR	1381	1381	78.2	78.2	691	0	0	0	0	0	0	0.5000	691
APR	567	567	52.5	52.5	283	0	0	0	0	0	0	0.5000	283
MAY	276	276	21.6	21.6	138	0	0	0	0	0	0	0.5000	138
JUN	752	752	84.3	84.3	376	0	0	0	0	0	0	0.5000	376
JUL	6430	6430	144.2	144.2	3215	0	0	0	0	0	0	0.5000	3215
AUG	2023	2023	78.9	78.9	1012	0	0	0	0	0	0	0.5000	1012
SEP	288	288	24.3	24.3	144	0	0	0	0	0	0	0.5000	144
OCT	374	374	23.1	23.1	187	0	0	0	0	0	0	0.5000	187
NOV	1212	1212	94.7	94.7	606	0	0	0	0	0	0	0.5000	606
DEC	2637	2637	92.4	92.4	1318	0	0	0	0	0	0	0.5000	1318
TOTAL	25948	25948	144.2		12974	0	0	0	0	0		0.5000	12974

S D L P R O C E S S O R I N P U T D A T A

Wed Nov 10 14:35:12 1993SDL RUN 6

```
°1613 ° TITLE LINE-2 ° RUN 6 PACKAGED HEAT PUMPS ON PERIMETER °
°1614 °       LINE-4 ° PKG HEAT PUMPS INTERIOR WITH HW COILS °  ..
°1615 °
°1616 °                 $ HVAC SYSTEMS DESCRIPTION
°1617 °
°1618 ° $ DESIGN TEMPS   COOLING 76F  HEATING 70F
°1619 ° $ SYSTEM TYPES   PACKAGED SELF-CONTAINED AIR/AIR HEAT PUMPS SERVE ALL
°1620 ° $                AREAS OF THE BUILDING.  THE PERIMETER UNITS ARE NOT
°1621 ° $                DEPENDED UPON FOR OUTSIDE AIR SO THE INTERIOR UNITS
°1622 ° $                SUPPLY ALL MINIMUM VENTILATION EQUIVALENT TO 20 CFM/PERSON.
°1623 ° $                THE INTERIOR HEAT PUMP UNITS ARE MODELED AS ONE PER FLOOR
°1624 ° $                AND ARE EQUIPPED WITH ECONOMIZER DAMPERS (LIMIT 55F) AND
°1625 ° $                CONDENSER HEAT IS AVAILABLE FOR REHEAT TO MAINTAIN 55% RH.
°1626 °
°1627 ° $                THE PERIMETER UNIT (PTAC) FANS ARE SET TO
°1628 ° $                RUN FROM 7AM TO 6PM WEEKDAYS.
°1629 ° $                HOWEVER, THE FANS CAN START AS EARLY AS 5AM TO LIMIT THE
°1630 ° $                ELECTRIC DEMAND CAUSED BY THE ELECTRIC RESISTANCE COILS IN
°1631 ° $                THE UNITS.  AT NIGHT THE SETBACK IS 60F AND ONLY THE
°1632 ° $                PERIMETER UNITS ARE ALLOWED TO OPERATE.  THE INTERIOR UNITS
°1633 ° $                (PSZ) ARE ALSO HEAT PUMPS; HOWEVER, THEY HAVE HOT WATER
°1634 ° $                COILS FOR SUPPLEMENTAL HEAT SINCE OA VENTILATION IS
°1635 ° $                THE MAJOR HEATING LOAD ON THE BUILDING SYSTEM.
°1636 °
°1637 ° SYSTEMS-REPORT  S (SS-A,SS-D,SS-J)  ..
°1638 °
°1639 ° FANSON  SCH THRU DEC 31 (WD) (1,5)(0) (6,7)(-999) (8,18)(1) (19,24) (0)
°1640 °                         (WEH) (1,24) (0)  ..
°1641 °
°1642 ° HEAT-SETPT SCH THRU DEC 31 (WD) (1,6)(60) (7)(65) (8,18)(70) (19,24)(60)
°1643 °                            (WEH) (1,24) (60)  ..
°1644 ° COOL-SETPT SCH THRU DEC 31 (WD) (1,7) (99) (8,18) (76) (19,24) (99)
°1645 °                            (WEH) (1,24) (99)  ..
°1646 °
°1647 ° OA-DAMP-POS SCH THRU DEC 31 (ALL) (1,8)(.01) (9,18)(-999) (19,24)(.01)  ..
°1648 °
°1649 ° ENV  ZONE-CONTROL  D-H-T 70  D-C-T 74  H-T-SCH HEAT-SETPT  C-T-SCH COOL-SETPT ..
°1650 °
°1651 ° RZ1  Z Z-C  ENV  OUTSIDE-AIR-CFM 2500  S-O ADJUST-LOADS  CFM/SQFT .9  ..
°1652 ° RZ2  Z LIKE RZ1  O-A-CFM 0  ..
°1653 ° RZ3  Z LIKE RZ2  ..
°1654 ° RZ4  Z LIKE RZ2  ..
°1655 ° RZ5  Z LIKE RZ2  ..
°1656 ° TZ1  Z  Z-C ENV  O-A-CFM 2500  CFM/SQFT .9  ..
°1657 ° TZ2  Z LIKE TZ1  O-A-CFM 0  ..
°1658 ° TZ3  Z LIKE TZ2  ..
°1659 ° TZ4  Z LIKE TZ2  ..
°1660 ° TZ5  Z LIKE TZ2  ..
°1661 ° PLEN1  Z Z-TYPE PLENUM  S-O ADJUST-LOADS  D-H-T 50  D-C-T 90  ..
°1662 ° PLEN2  Z Z-TYPE PLENUM  ..
°1663 ° A-STORAGE  Z LIKE RZ1  AIR-CHANGES/HR 4  OA-CHANGES .5  ..
°1664 °
°1665 ° PERSYS   SYSTEM  S-TYPE=PTAC  MAX-S-T=105  MIN-S-T=55  S-S=.20  S-E=.35
°1666 °                  N-C-C=CYCLE-ON-ANY  F-SCH=FANSON  MIN-HP-T = 40
°1667 °                  Z-N=(RZ2,RZ3,RZ4,RZ5,TZ2,TZ3,TZ4,TZ5)  HEAT-SOURCE=HEAT-PUMP
```

```
*1668 *                    LOW-SPEED-RATIOS=(.5,.6,.5,.55)  ..
*1669 *
*1670 * CORESY1  SYSTEM  S-TYPE=PSZ  MAX-S-T= 105  MIN-S-T= 55  S-S= 2.5  S-E= .50
*1671 *                  MIN-AIR-SCH=OA-DAMP-POS  REHEAT-DELTA-T=10  MAX-COND-RCVRY=.60
*1672 *                  ECONO-LIMIT-T=55   HEAT-SOURCE=HEAT-PUMP  MAX-HP-SUPP-T=40
*1673 *                  MIN-HP-T= 25  MIN-HGB-RATIO= .10  MIN-UNLOAD-RATIO= .33
*1674 *                  RETURN-AIR-PATH= PLENUM-ZONES   PLENUM-NAMES= (PLEN1)
*1675 *                  ZONE-NAMES= (RZ1,PLEN1)  HP-SUPP-SOURCE= HOT-WATER
*1676 *                  FAN-SCHEDULE= FANSON  MAX-HUMIDITY= 55  ..
*1677 *
*1678 * CORESY2  SYSTEM  LIKE CORESY1  P-N (PLEN2)  Z-N (TZ1,PLEN2)  ..
*1679 *
*1680 * BASEMT   SYSTEM  S-TYPE= PSZ  MAX-S-T= 105  MIN-S-T= 55  S-S= 2.5  S-E= .5
*1681 *                  HEAT-SOURCE= HOT-WATER  Z-N= (A-STORAGE)  F-SCH= FANSON  ..
*1682 *
*1683 * PLANT1  = PLANT-ASSIGNMENT  SYSTEM-NAMES = (PERSYS,CORESY1,
*1684 *                                             CORESY2,BASEMT)
*1685 *                            INT-ELEC-KW = 100  $ FOR ELEVATORS
*1686 *                            INT-ELEC-SCH = OCCUP
*1687 *                            DHW-SIZE=0
*1688 *                            DHW-GAL/MIN  = 2.22
*1689 *                            DHW-SCH      = OCCUP  ..
*1690 *
*1691 * OC1          =DAY-SCHEDULE        (1,8) (0.)          (9,10) (1.)
*1692 *                                   (11,13) (.8,.4,.8)  (14,24) (1.,1.,1.,
*1693 *                                                  .3,.1,.1,.1,0.,0.,0.,0.)  ..
*1694 * OC2          =DAY-SCHEDULE        (1,24) (0.0)  ..
*1695 * PEOPLE       =WEEK-SCHEDULE       (MON,FRI)  OC1      (WEH)  OC2  ..
*1696 * OCCUP        =SCHEDULE            THRU DEC 31  PEOPLE   ..
*1697 *
*1698 * END  ..
*1699 * COMPUTE SYSTEMS  ..
*1700 * INPUT PLANT  ..
```

P D L P R O C E S S O R I N P U T D A T A

Wed Nov 10 14:35:12 1993PDL RUN 6

```
°1701 ° PLANT1 = PLANT-ASSIGNMENT  ..
°1702 °
°1703 ° PLANT-REPORT  S (PS-A,PS-B,PS-C,PS-D,BEPS)  ..
°1704 °
°1705 ° $ THIS PLANT USES TWO 300KW TURBOCHARGED GAS ENGINE GENERATORS
°1706 ° $ FOR PEAK SHAVING - 2 WINTER & 1 SUMMER.  A CURVE FIT HAS BEEN ENTERED TO
°1707 ° $ CONVERT THE SIMULATION OF A DIESEL DRIVEN GENERATOR TO GAS ENGINE DRIVEN.
°1708 ° $ THERE IS NO ATTEMPT TO RECOVER HEAT FROM THE GAS ENGINE AS IT WILL ONLY
°1709 ° $ RUN DURING WEEKDAYS AND FOR VERY SHORT PERIODS.  THERE IS ALSO A GAS FIRED HOT
°1710 ° $ WATER GENERATOR PROVIDE THE HEATING REQUIRED BY THE INTERIOR AIR SYSTEM
°1711 ° $ WHICH HAS HOT WATER HEATING COILS TO SUPPLEMENT THE HEAT PUMPS.
°1712 °
°1713 ° $ NOTE THAT REPORT PS-C INDICATES THAT THE GENERATORS OPERATE
°1714 ° $ 315 HOURS TO REDUCE THE RATCHETED DEMAND BY 600KW DURING WINTER. THIS REDUCTIO
°1715 ° $ IN DEMAND CAN BE ACCOMPLISHED IN OTHER WAYS, SUCH AS STAGING STARTUP TIMES FOR
°1716 ° $ BANKS OF PTAC UNITS, OR BY SHEDDING UNITS THROUGH AN ENERGY MANAGEMENT SYSTEM.
°1717 ° $ BUT MODELING IN THIS MANNER SERVES AS PROXY FOR THESE OTHER STRATEGIES AND
°1718 ° $ ALLOWS ONE TO EXPLORE THE BENEFITS, COST SAVINGS, AND EXTENT OF THE EFFORT
°1719 ° $ REQUIRED TO PERFORM FULLY AND RELIABLY THE ENERGY MANAGEMENT STRATEGY.
°1720 °
°1721 ° GAS-ENG  P-E  TYPE  DIESEL-GEN  SIZE 1.02  I-N 2
°1722 °                    FUEL-METER = M2  .. $ TO SEPARATE THIS GAS FROM OTHER USES
°1723 ° HWG      P-E  TYPE HW-BOILER    SIZE 15.0  I-N 1  ..
°1724 °
°1725 ° DWH      P-E  TYPE DHW-HEATER  SIZE .10   I-N 1  ..
°1726 °
°1727 ° PLANT-PARAMETERS  DIESEL-GEN-EFF .30  ..
°1728 °
°1729 ° GAS-ENGINE CURVE-FIT  TYPE=LINEAR  COEF=(.2,.8)  ..
°1730 °
°1731 ° EQUIPMENT-QUAD    DIESEL-I/O-FPLR= GAS-ENGINE  ..
°1732 °
°1733 ° PEAK-SHAVE LOAD-ASSIGNMENT  TYPE= ELECTRICAL  L-R= 99
°1734 °                             P-E= GAS-ENG  N= 2
°1735 °                             P-E= UTILITY  N= 99  ..
°1736 °
°1737 ° NORMAL-OP  LOAD-ASSIGNMENT  TYPE= ELECTRICAL  L-R= 99
°1738 °                             P-E= UTILITY  N= 99  ..
°1739 °
°1740 ° LOAD-MANAGEMENT  PRED-L-R= 9  L-A= (DEFAULT,DEFAULT,NORMAL-OP)
°1741 °                  PRED-L-R= 100  L-A= (DEFAULT,DEFAULT,PEAK-SHAVE)  ..
°1742 °
°1743 ° ENERGY-RESOURCE  RESOURCE ELECTRICITY  ..
°1744 ° ENERGY-RESOURCE  RESOURCE NATURAL-GAS  ENERGY/UNIT = 100000
°1745 °                  UNIT-NAME = THERMS    FUEL-METERS = (M1,M2)  ..
°1746 ° END  ..
°1747 ° COMPUTE PLANT  ..
°1748 ° INPUT ECONOMICS  ..
```

```
*1749 *
*1750 *                    $ ENERGY CHARGE DESCRIPTION
*1751 *
*1752 * $ THIS IS A SIMPLE UNIFORM RATE FOR BOTH ENERGY AND DEMAND IN WHICH THE
*1753 * $ WINTER AND SUMMER CHARGES ARE DIFFERENT. THE
*1754 * $ DEMAND CHARGE FOR SUMMER CARRIES FOR THE WHOLE YEAR AT 15 DOLLARS/KW
*1755 * $ WITH A 100% RATCHET.
*1756 * $ A 10 DOLLAR/KW CHARGE WITH A 85% RATCHET IS LIMITED TO THE WINTER SEASON.
*1757 * $ THE METHOD OF CALCULATING THE SUMMER RATCHET IS BY SEARCHING FOR THE HIGHEST
*1758 * $ MONTH, WHEREAS THE WINTER IS THE RUNNING AVERAGE OF 2 CONSECUTIVE MONTHS.
*1759 *
*1760 * ECONOMICS-REPORT  S=(ES-D,ES-E,ES-F)  ..
*1761 *
*1762 * ELEC-COST = UTILITY-RATE   RESOURCE = ELECTRICITY
*1763 *                            ENERGY-CHG  = .05
*1764 *                            MONTH-CHGS  = (500,500,500,1000,1000,1000,
*1765 *                                           1000,1000,1000,500,500,500)
*1766 *                            BLOCK-CHARGES = (SUMMER-DEMAND,WINTER-DEMAND)
*1767 *                            DEMAND-RATCHETS = (WIN-RATCHET,SUM-RATCHET) ..
*1768 *
*1769 * SUMMER-DEMAND = BLOCK-CHARGE  BLOCK-SCH       = SEASON
*1770 *                               SCH-FLAG        = 2
*1771 *                               BLOCK1-TYPE     = DEMAND
*1772 *                               BLOCK1-DATA     = (1,15)  ..
*1773 *
*1774 * WINTER-DEMAND = BLOCK-CHARGE  BLOCK-SCH       = SEASON
*1775 *                               SCH-FLAG        = 1
*1776 *                               BLOCK1-TYPE     = DEMAND
*1777 *                               BLOCK1-DATA     = (1,10)  ..
*1778 *
*1779 * WIN-RATCHET    = RATCHET   NUM-MONTHS = 2
*1780 *                            TYPE       = AVERAGE
*1781 *                            FRACTION   = .85
*1782 *                            SCH-FLAG   = 1
*1783 *                            RATCHET-SCH = SEASON  ..
*1784 *
*1785 * SUM-RATCHET    = RATCHET   NUM-MONTHS = 12
*1786 *                            TYPE       = HIGHEST-PEAK
*1787 *                            FRACTION   = 1.0
*1788 *                            SCH-FLAG   = 2
*1789 *                            RATCHET-SCH = SEASON  ..
*1790 *
*1791 * SEASON   = SCHEDULE
*1792 *                     THRU APR 12 (ALL) (1,24)(1)
*1793 *                     THRU OCT 18 (ALL) (1,24)(2)
*1794 *                     THRU DEC 31 (ALL) (1,24)(1)   ..
*1795 *
*1796 * GAS-COST  = UTILITY-RATE   RESOURCE = NATURAL-GAS
*1797 *                            ENERGY-CHG = .6  ..
*1798 *
*1799 * END  ..
*1800 * COMPUTE ECONOMICS  ..
*1801 * STOP  ..
```

31-STORY OFFICE BLDG, CHICAGO - LOAD2 RUN 6 PACKAGED HEAT PUMPS ON PERIMETER DOE-2.1E-001 Wed Nov 10 14:35:12 1993SDL RUN 6
PKG HEAT PUMPS INTERIOR WITH HW COILS -

REPORT- SV-A SYSTEM DESIGN PARAMETERS PERSYS WEATHER FILE- TRY CHICAGO

SYSTEM NAME	SYSTEM TYPE	ALTITUDE MULTIPLIER	FLOOR AREA (SQFT)	MAX PEOPLE
PERSYS	PTAC	1.020	251124.8	2976.

SUPPLY FAN (CFM)	ELEC (KW)	DELTA-T (F)	RETURN FAN (CFM)	ELEC (KW)	DELTA-T (F)	OUTSIDE AIR RATIO	COOLING CAPACITY (KBTU/HR)	SENSIBLE (SHR)	HEATING CAPACITY (KBTU/HR)	COOLING EIR (BTU/BTU)	HEATING EIR (BTU/BTU)	HEAT PUMP SUPP-HEAT (KBTU/HR)
592471.	0.000	0.2	0.	0.000	0.0	0.000	0.000	0.000	0.000	0.44	0.37	-37.691

ZONE NAME	SUPPLY FLOW (CFM)	EXHAUST FLOW (CFM)	FAN (KW)	MINIMUM FLOW RATIO	OUTSIDE AIR FLOW (CFM)	COOLING CAPACITY (KBTU/HR)	SENSIBLE (SHR)	EXTRACTION RATE (KBTU/HR)	HEATING CAPACITY (KBTU/HR)	ADDITION RATE (KBTU/HR)	MULTIPLIER
RZ2	859.	0.	0.057	1.000	0.	21.19	0.74	17.29	-25.08	-31.71	8.0
RZ3	498.	0.	0.033	1.000	0.	12.92	0.71	10.01	-15.30	-18.36	4.0
RZ4	844.	0.	0.056	1.000	0.	20.26	0.76	16.98	-23.98	-31.15	8.0
RZ5	1028.	0.	0.068	1.000	0.	24.79	0.76	20.68	-29.34	-37.93	4.0
TZ2	843.	0.	0.055	1.000	0.	20.72	0.74	16.97	-24.52	-31.12	240.0
TZ3	439.	0.	0.029	1.000	0.	11.48	0.71	8.83	-13.59	-16.19	120.0
TZ4	824.	0.	0.054	1.000	0.	20.48	0.73	16.58	-24.24	-30.41	240.0
TZ5	999.	0.	0.066	1.000	0.	24.11	0.75	20.10	-28.54	-36.87	120.0

SYSTEM NAME	SYSTEM TYPE	ALTITUDE MULTIPLIER	FLOOR AREA (SQFT)	MAX PEOPLE
CORESY1	PSZ	1.020	11900.0	60.

SUPPLY FAN (CFM)	ELEC (KW)	DELTA-T (F)	RETURN FAN (CFM)	ELEC (KW)	DELTA-T (F)	OUTSIDE AIR RATIO	COOLING CAPACITY (KBTU/HR)	SENSIBLE (SHR)	HEATING CAPACITY (KBTU/HR)	COOLING EIR (BTU/BTU)	HEATING EIR (BTU/BTU)	HEAT PUMP SUPP-HEAT (KBTU/HR)
10924.	6.285	1.8	0.	0.000	0.0	0.233	431.657	0.633	-419.990	0.36	0.37	-604.210

ZONE NAME	SUPPLY FLOW (CFM)	EXHAUST FLOW (CFM)	FAN (KW)	MINIMUM FLOW RATIO	OUTSIDE AIR FLOW (CFM)	COOLING CAPACITY (KBTU/HR)	SENSIBLE (SHR)	EXTRACTION RATE (KBTU/HR)	HEATING CAPACITY (KBTU/HR)	ADDITION RATE (KBTU/HR)	MULTIPLIER
RZ1	10924.	0.	0.000	1.000	2550.	0.00	0.00	224.16	-117.98	-412.93	1.0
PLEN1	0.	0.	0.000	0.000	0.	0.00	0.00	0.00	0.00	0.00	1.0

31-STORY OFFICE BLDG, CHICAGO - LOAD2 RUN 6 PACKAGED HEAT PUMPS ON PERIMETER DOE-2.1E-001 Wed Nov 10 14:35:12 1993SDL RUN 6
PKG HEAT PUMPS INTERIOR WITH HW COILS -

REPORT- SV-A SYSTEM DESIGN PARAMETERS CORESY2 WEATHER FILE- TRY CHICAGO

SYSTEM NAME	SYSTEM TYPE	ALTITUDE MULTIPLIER	FLOOR AREA (SQFT)	MAX PEOPLE
CORESY2	PSZ	1.020	357000.0	1800.

SUPPLY FAN (CFM)	ELEC (KW)	DELTA-T (F)	RETURN FAN (CFM)	ELEC (KW)	DELTA-T (F)	OUTSIDE AIR RATIO	COOLING CAPACITY (KBTU/HR)	SENSIBLE (SHR)	HEATING CAPACITY (KBTU/HR)	COOLING EIR (BTU/BTU)	HEATING EIR (BTU/BTU)	HEAT PUMP SUPP-HEAT (KBTU/HR)
327726.	188.556	1.8	0.	0.000	0.0	0.233	13082.682	0.631	-12729.096	0.36	0.37	-17996.645

ZONE NAME	SUPPLY FLOW (CFM)	EXHAUST FLOW (CFM)	FAN (KW)	MINIMUM FLOW RATIO	OUTSIDE AIR FLOW (CFM)	COOLING CAPACITY (KBTU/HR)	SENSIBLE (SHR)	EXTRACTION RATE (KBTU/HR)	HEATING CAPACITY (KBTU/HR)	ADDITION RATE (KBTU/HR)	MULTIPLIER
TZ1	10924.	0.	0.000	1.000	2550.	0.00	0.00	224.16	-117.98	-412.93	30.0
PLEN2	0.	0.	0.000	0.000	0.	0.00	0.00	0.00	0.00	0.00	30.0

SYSTEM NAME	SYSTEM TYPE	ALTITUDE MULTIPLIER	FLOOR AREA (SQFT)	MAX PEOPLE
BASEMT	PSZ	1.020	20000.0	0.

SUPPLY FAN (CFM)	ELEC (KW)	DELTA-T (F)	RETURN FAN (CFM)	ELEC (KW)	DELTA-T (F)	OUTSIDE AIR RATIO	COOLING CAPACITY (KBTU/HR)	SENSIBLE (SHR)	HEATING CAPACITY (KBTU/HR)	COOLING EIR (BTU/BTU)	HEATING EIR (BTU/BTU)
27200.	15.649	1.8	0.	0.000	0.0	0.094	834.338	0.699	-1151.763	0.36	0.37

ZONE NAME	SUPPLY FLOW (CFM)	EXHAUST FLOW (CFM)	FAN (KW)	MINIMUM FLOW RATIO	OUTSIDE AIR FLOW (CFM)	COOLING CAPACITY (KBTU/HR)	SENSIBLE (SHR)	EXTRACTION RATE (KBTU/HR)	HEATING CAPACITY (KBTU/HR)	ADDITION RATE (KBTU/HR)	MULTIPLIER
A-STORAGE	27200.	0.	0.000	1.000	2550.	0.00	0.00	558.14	0.00	-1028.16	1.0

31-STORY OFFICE BLDG, CHICAGO - LOAD2 RUN 6 PACKAGED HEAT PUMPS ON PERIMETER DOE-2.1E-001 Wed Nov 10 14:35:12 1993SDL RUN 6
PKG HEAT PUMPS INTERIOR WITH HW COILS -
REPORT- SS-D PLANT MONTHLY LOADS SUMMARY FOR PLANT1 WEATHER FILE- TRY CHICAGO

	COOLING					HEATING					ELEC	
MONTH	COOLING ENERGY (MBTU)	TIME OF MAX DY	TIME OF MAX HR	DRY-BULB TEMP	WET-BULB TEMP	MAXIMUM COOLING LOAD (KBTU/HR)	HEATING ENERGY (MBTU)	TIME OF MAX DY	TIME OF MAX HR	DRY-BULB TEMP	WET-BULB TEMP	MAXIMUM HEATING LOAD (KBTU/HR)	ELEC-TRICAL ENERGY (KWH)	MAXIMUM ELEC LOAD (KW)
JAN	0.00000					0.000	-560.404	4	7	2.F	2.F	-16832.686	606630.	2649.032
FEB	0.00000					0.000	-353.349	8	7	5.F	5.F	-9447.347	548446.	2741.655
MAR	0.00000					0.000	-98.999	24	9	7.F	6.F	-4634.541	560728.	2511.064
APR	0.00000					0.000	-2.870	19	7	38.F	36.F	-135.569	537194.	2772.286
MAY	0.00000					0.000	0.000					0.000	515266.	3056.260
JUN	0.00000					0.000	0.000					0.000	642143.	3263.217
JUL	0.00000					0.000	0.000					0.000	711013.	3805.724
AUG	0.00000					0.000	0.000					0.000	688815.	3342.623
SEP	0.00000					0.000	0.000					0.000	565035.	3016.656
OCT	0.00000					0.000	0.000	4	8	49.F	41.F	-0.001	478891.	2616.646
NOV	0.00000					0.000	-1.909	29	7	28.F	27.F	-200.758	512426.	2726.561
DEC	0.00000					0.000	-79.629	20	7	23.F	22.F	-7772.390	621687.	3066.273
TOTAL	0.000						-1097.161						6988178.	
MAX						0.000						-16832.686		3805.724

MAXIMUM DAILY INTEGRATED COOLING LOAD (DES DAY) 0.000 (KBTU)
MAXIMUM DAILY INTEGRATED COOLING LOAD (WTH FILE) 0.000 (KBTU)

REPORT- SS-Q HEAT PUMP COOLING SUMMARY FOR PLANT1 WEATHER FILE- TRY CHICAGO

	UNIT RUN TIME (HOURS)	TOTAL LOAD ON UNIT (MBTU)	ENERGY IN TO UNIT (MBTU)	AUXILIARY ENERGY (MBTU)	SUP UNIT LOAD (MBTU)	SUP UNIT ENERGY (MBTU)	WASTE HEAT GENERATED (MBTU)	WASTE HEAT USE (MBTU)		INDOOR FAN ENERGY (MBTU)
JAN	3002.	71.101	43.773	0.228	0.000	0.000	0.000	0.000	0.000	38.928
FEB	4890.	112.129	65.522	0.206	0.000	0.000	0.000	0.000	0.000	39.994
MAR	10278.	235.424	165.651	0.194	0.000	0.000	-16.891	0.000	0.000	38.805
APR	34341.	876.052	452.409	0.103	0.000	0.000	-175.015	0.000	0.000	93.752
MAY	42321.	1197.330	585.963	0.057	0.000	0.000	-331.266	0.000	0.000	126.760
JUN	60895.	2227.109	927.511	0.002	0.000	0.000	-855.999	0.000	0.000	184.579
JUL	74038.	3045.257	1203.019	0.000	0.000	0.000	-1299.914	0.000	0.000	189.988
AUG	66131.	2727.716	1068.362	0.000	0.000	0.000	-1148.027	0.000	0.000	194.969
SEP	41827.	1454.120	685.753	0.029	0.000	0.000	-530.553	0.000	0.000	154.160
OCT	23483.	634.922	384.438	0.094	0.000	0.000	-155.266	0.000	0.000	102.097
NOV	9840.	272.607	163.251	0.181	0.000	0.000	-55.189	0.000	0.000	42.261
DEC	2136.	50.620	29.866	0.215	0.000	0.000	-0.053	0.000	0.000	14.612
ANNUAL	373182.	12904.387	5775.517	1.307	0.000	0.000	-4568.173	0.000	0.000	1220.905

CSPF (WITH PARASITICS) = 1.84 (BTU/BTU)

CSPF (WITHOUT PARASITICS) = 2.23 (BTU/BTU)

31-STORY OFFICE BLDG, CHICAGO - LOAD2 RUN 6 PACKAGED HEAT PUMPS ON PERIMETER DOE-2.1E-001 Wed Nov 10 14:35:12 1993SDL RUN 6
PKG HEAT PUMPS INTERIOR WITH HW COILS -
REPORT- SS-Q HEAT PUMP HEATING SUMMARY FOR PLANT1 WEATHER FILE- TRY CHICAGO

	UNIT RUN TIME (HOURS)	TOTAL LOAD ON UNIT (MBTU)	ENERGY IN TO UNIT (MBTU)	AUXILIARY ENERGY (MBTU)	SUP UNIT LOAD (MBTU)	SUP UNIT ENERGY (MBTU)	WASTE HEAT GENERATED (MBTU)	WASTE HEAT USE (MBTU)	DEFROST LOAD (MBTU)	INDOOR FAN ENERGY (MBTU)
JAN	601.	-229.743	216.820	0.105	-1093.122	1118.976	0.000	0.000	0.000	136.748
FEB	873.	-275.077	229.612	0.095	-745.346	835.283	0.000	0.000	0.000	126.690
MAR	1263.	-190.148	217.469	0.097	-251.684	348.623	0.000	0.000	0.000	156.672
APR	912.	-29.271	73.197	0.058	-33.808	75.602	0.000	0.000	0.000	87.262
MAY	141.	-4.231	11.766	0.031	-1.722	4.900	0.000	0.000	0.000	37.685
JUN	0.	0.000	0.427	0.001	0.000	0.000	0.000	0.000	0.000	6.821
JUL	0.	0.000	0.000	0.000	0.000	0.000	0.000	0.000	0.000	1.068
AUG	0.	0.000	0.000	0.000	0.000	0.000	0.000	0.000	0.000	1.950
SEP	44.	-1.223	5.910	0.016	-1.897	4.215	0.000	0.000	0.000	22.185
OCT	801.	-14.516	37.153	0.053	-9.583	26.725	0.000	0.000	0.000	59.401
NOV	1349.	-232.605	208.562	0.090	-145.872	302.443	0.000	0.000	0.000	124.209
DEC	805.	-493.906	410.498	0.091	-433.223	733.929	0.000	0.000	0.000	168.024
ANNUAL	6788.	-1470.721	1411.415	0.637	-2716.257	3450.696	0.000	0.000	0.000	928.715

HSPF (WITH PARASITICS) = 0.88 (BTU/BTU)

HSPF (WITHOUT PARASITICS) = 0.86 (BTU/BTU)

31-STORY OFFICE BLDG, CHICAGO - LOAD2 RUN 6 PACKAGED HEAT PUMPS ON PERIMETER DOE-2.1E-001 Wed Nov 10 14:35:12 1993SDL RUN 6
PKG HEAT PUMPS INTERIOR WITH HW COILS -
REPORT- SS-A SYSTEM MONTHLY LOADS SUMMARY FOR PERSYS WEATHER FILE- TRY CHICAGO

	COOLING						HEATING						ELEC	
MONTH	COOLING ENERGY (MBTU)	TIME OF MAX DY	TIME OF MAX HR	DRY-BULB TEMP	WET-BULB TEMP	MAXIMUM COOLING LOAD (KBTU/HR)	HEATING ENERGY (MBTU)	TIME OF MAX DY	TIME OF MAX HR	DRY-BULB TEMP	WET-BULB TEMP	MAXIMUM HEATING LOAD (KBTU/HR)	ELEC-TRICAL ENERGY (KWH)	MAXIMUM ELEC LOAD (KW)
JAN	71.10081	25	15	47.F	42.F	2832.155	-561.895	12	7	-6.F	-7.F	-6938.614	278176.	2083.120
FEB	112.12880	25	16	27.F	22.F	3870.774	-420.456	4	7	6.F	5.F	-5891.914	231497.	1773.323
MAR	217.68666	3	15	76.F	65.F	5229.958	-179.899	24	7	6.F	5.F	-4523.889	195998.	1356.587
APR	690.48712	27	16	82.F	61.F	7096.853	-41.793	8	7	32.F	29.F	-3850.892	201114.	1221.312
MAY	836.36127	20	15	76.F	67.F	7605.961	-3.178	6	8	37.F	33.F	-808.234	193072.	1295.029
JUN	1178.62756	4	16	85.F	67.F	8359.129	0.000					0.000	238409.	1381.989
JUL	1395.03625	13	16	97.F	77.F	8973.516	0.000					0.000	267659.	1605.157
AUG	1263.06702	19	16	90.F	71.F	8468.173	0.000					0.000	254921.	1453.328
SEP	836.97095	17	16	82.F	66.F	7991.283	-2.318	22	8	34.F	31.F	-834.356	207279.	1314.868
OCT	488.14542	5	16	74.F	62.F	6163.937	-17.142	21	7	30.F	29.F	-1689.064	174905.	1069.788
NOV	210.97493	8	15	60.F	49.F	5984.566	-157.509	15	7	27.F	25.F	-4795.658	183456.	1450.356
DEC	50.57640	10	15	41.F	35.F	3256.550	-369.000	9	7	13.F	12.F	-4625.953	224671.	1449.199
TOTAL	7351.176						-1753.190						2651130.	
MAX						8973.516						-6938.614		2083.120

	-----COOLING-----				---HEATING---			DAY COOLING PEAK			
	JUL 13				JAN 12			JUL 7			
HOUR	HOURLY COOLING LOAD (KBTU)	SENSIBLE HEAT RATIO	DRY-BULB TEMP	WET-BULB TEMP	HOURLY HEATING LOAD (KBTU)	DRY-BULB TEMP	WET-BULB TEMP	HOURLY COOLING LOAD (KBTU)	SENSIBLE HEAT RATIO	DRY-BULB TEMP	WET-BULB TEMP
1	0.000	0.000	76.F	66.F	-3881.075	5.F	4.F	0.000	0.000	69.F	62.F
2	0.000	0.000	74.F	66.F	0.000	3.F	2.F	0.000	0.000	69.F	62.F
3	0.000	0.000	74.F	65.F	-4950.817	1.F	0.F	0.000	0.000	69.F	63.F
4	0.000	0.000	73.F	62.F	0.000	-2.F	-3.F	0.000	0.000	69.F	63.F
5	0.000	0.000	72.F	62.F	-4859.410	-4.F	-5.F	0.000	0.000	68.F	63.F
6	0.000	0.000	72.F	63.F	0.000	-5.F	-6.F	0.000	0.000	68.F	63.F
7	4026.084	0.982	73.F	65.F	-6938.614	-6.F	-7.F	4657.491	0.989	70.F	66.F
8	5852.839	0.894	76.F	69.F	-5074.488	-7.F	-7.F	6418.005	0.905	74.F	68.F
9	7047.918	0.908	82.F	72.F	-1759.835	-8.F	-8.F	7035.097	0.914	78.F	71.F
10	7022.809	0.926	86.F	74.F	-1506.036	-7.F	-7.F	7519.628	0.930	82.F	73.F
11	6920.147	0.944	89.F	76.F	-1100.898	-4.F	-5.F	6831.383	0.953	85.F	73.F
12	6555.083	0.916	93.F	78.F	-814.904	0.F	0.F	6552.890	0.922	87.F	72.F
13	6930.823	0.896	95.F	78.F	-589.505	4.F	2.F	6978.472	0.916	88.F	72.F
14	8185.547	0.918	96.F	77.F	-309.692	6.F	4.F	7819.372	0.924	89.F	72.F
15	8973.516	0.921	97.F	77.F	-376.811	4.F	2.F	8065.037	0.935	90.F	72.F
16	6405.962	0.941	97.F	78.F	-518.841	3.F	1.F	6072.042	0.953	88.F	73.F
17	5865.767	0.962	99.F	77.F	-1008.031	1.F	0.F	6465.285	0.971	87.F	72.F
18	0.000	0.000	97.F	76.F	-1451.036	-2.F	-3.F	0.000	0.000	86.F	72.F
19	0.000	0.000	95.F	75.F	0.000	-4.F	-5.F	75.958	1.000	84.F	70.F
20	0.000	0.000	93.F	75.F	0.000	-4.F	-5.F	0.000	0.000	81.F	69.F
21	0.000	0.000	90.F	74.F	-513.733	-3.F	-4.F	0.000	0.000	80.F	68.F
22	0.000	0.000	87.F	73.F	0.000	-3.F	-4.F	0.000	0.000	77.F	67.F
23	0.000	0.000	86.F	73.F	-1029.106	-2.F	-3.F	0.000	0.000	76.F	68.F
24	0.000	0.000	85.F	73.F	0.000	-1.F	-2.F	0.000	0.000	75.F	67.F
	---				---			---			
SUM								74490.664			
MAX	8973.516				-6938.614						

SYSTEM-TYPE	PTAC	SQFT/TON	335.8
COOLING PEAK	35.73 (BTU/HR- SQFT)	HEATING PEAK	-27.63 (BTU/HR- SQFT)
SUPPLY AIR PEAK FLOW	2.36 (CFM/SQFT)	MIN-OA/PERSON	0.00 (CFM)
OA FRAC AT CLG PEAK	0.000	OA FRAC AT HTG PEAK	0.000

* ASTERISKS INDICATE HOURS LOADS NOT MET

31-STORY OFFICE BLDG, CHICAGO - LOAD2 RUN 6 PACKAGED HEAT PUMPS ON PERIMETER DOE-2.1E-001 Wed Nov 10 14:35:12 1993SDL RUN 6
PKG HEAT PUMPS INTERIOR WITH HW COILS -
REPORT- SS-Q HEAT PUMP COOLING SUMMARY FOR PERSYS WEATHER FILE- TRY CHICAGO

	UNIT RUN TIME (HOURS)	TOTAL LOAD ON UNIT (MBTU)	ENERGY IN TO UNIT (MBTU)	AUXILIARY ENERGY (MBTU)	SUP UNIT LOAD (MBTU)	SUP UNIT ENERGY (MBTU)	WASTE HEAT GENERATED (MBTU)	WASTE HEAT USE (MBTU)		INDOOR FAN ENERGY (MBTU)
JAN	3002.	71.101	43.773	0.000	0.000	0.000	0.000	0.000	0.000	0.534
FEB	4890.	112.129	65.522	0.000	0.000	0.000	0.000	0.000	0.000	0.885
MAR	10272.	217.687	155.236	0.000	0.000	0.000	0.000	0.000	0.000	1.358
APR	34289.	690.487	346.282	0.000	0.000	0.000	0.000	0.000	0.000	4.574
MAY	42230.	836.361	392.750	0.000	0.000	0.000	0.000	0.000	0.000	5.693
JUN	60694.	1178.628	535.701	0.000	0.000	0.000	0.000	0.000	0.000	8.280
JUL	73744.	1395.036	641.517	0.000	0.000	0.000	0.000	0.000	0.000	11.142
AUG	65871.	1263.067	580.271	0.000	0.000	0.000	0.000	0.000	0.000	9.101
SEP	41689.	836.971	409.189	0.000	0.000	0.000	0.000	0.000	0.000	5.813
OCT	23429.	488.145	270.375	0.000	0.000	0.000	0.000	0.000	0.000	3.228
NOV	9822.	210.975	132.275	0.000	0.000	0.000	0.000	0.000	0.000	1.432
DEC	2136.	50.576	29.822	0.000	0.000	0.000	0.000	0.000	0.000	0.362
ANNUAL	372068.	7351.163	3602.714	0.000	0.000	0.000	0.000	0.000	0.000	52.401

GSPF (WITH PARASITICS) = 2.01 (BTU/BTU)

CSPF (WITHOUT PARASITICS) = 2.04 (BTU/BTU)

REPORT- SS-Q HEAT PUMP HEATING SUMMARY FOR PERSYS WEATHER FILE- TRY CHICAGO

	UNIT RUN TIME (HOURS)	TOTAL LOAD ON UNIT (MBTU)	ENERGY IN TO UNIT (MBTU)	AUXILIARY ENERGY (MBTU)	SUP UNIT LOAD (MBTU)	SUP UNIT ENERGY (MBTU)	WASTE HEAT GENERATED (MBTU)	WASTE HEAT USE (MBTU)	DEFROST LOAD (MBTU)	INDOOR FAN ENERGY (MBTU)
JAN	499.	-4.814	6.572	0.000	-557.081	1118.976	0.000	0.000	0.000	3.239
FEB	760.	-5.629	9.726	0.000	-414.827	835.283	0.000	0.000	0.000	2.378
MAR	1173.	-11.175	14.659	0.000	-168.724	348.623	0.000	0.000	0.000	1.007
APR	893.	-7.985	11.239	0.000	-33.808	75.602	0.000	0.000	0.000	0.229
MAY	138.	-1.455	2.676	0.000	-1.722	4.900	0.000	0.000	0.000	0.018
JUN	0.	0.000	0.000	0.000	0.000	0.000	0.000	0.000	0.000	0.000
JUL	0.	0.000	0.000	0.000	0.000	0.000	0.000	0.000	0.000	0.000
AUG	0.	0.000	0.000	0.000	0.000	0.000	0.000	0.000	0.000	0.000
SEP	44.	-0.421	1.379	0.000	-1.897	4.215	0.000	0.000	0.000	0.013
OCT	792.	-7.559	10.563	0.000	-9.583	26.725	0.000	0.000	0.000	0.095
NOV	1254.	-12.574	17.337	0.000	-144.934	302.443	0.000	0.000	0.000	0.876
DEC	605.	-4.072	7.770	0.000	-364.929	733.929	0.000	0.000	0.000	2.093
ANNUAL	6158.	-55.685	81.920	0.000	-1697.505	3450.696	0.000	0.000	0.000	9.947

HSPF (WITH PARASITICS) = 0.50 (BTU/BTU)

HSPF (WITHOUT PARASITICS) = 0.50 (BTU/BTU)

31-STORY OFFICE BLDG, CHICAGO - LOAD2 RUN 6 PACKAGED HEAT PUMPS ON PERIMETER DOE-2.1E-001 Wed Nov 10 14:35:12 1993SDL RUN 6
PKG HEAT PUMPS INTERIOR WITH HW COILS -
REPORT- SS-A SYSTEM MONTHLY LOADS SUMMARY FOR CORESY1 WEATHER FILE- TRY CHICAGO

	COOLING						HEATING						ELEC	
MONTH	COOLING ENERGY (MBTU)	TIME OF MAX DY	TIME OF MAX HR	DRY-BULB TEMP	WET-BULB TEMP	MAXIMUM COOLING LOAD (KBTU/HR)	HEATING ENERGY (MBTU)	TIME OF MAX DY	TIME OF MAX HR	DRY-BULB TEMP	WET-BULB TEMP	MAXIMUM HEATING LOAD (KBTU/HR)	ELEC-TRICAL ENERGY (KWH)	MAXIMUM ELEC LOAD (KW)
JAN	0.00000					0.000	-49.982	4	6	3.F	3.F	-630.566	11204.	68.011
FEB	0.00000					0.000	-41.290	8	7	5.F	5.F	-527.026	10809.	72.539
MAR	0.35130	3	14	74.F	64.F	177.610	-26.101	1	7	28.F	26.F	-350.827	12694.	65.774
APR	3.12756	28	15	78.F	68.F	128.748	-5.252	8	7	32.F	29.F	-181.151	10455.	50.841
MAY	7.69900	21	13	87.F	76.F	214.365	-0.915	10	7	41.F	39.F	-146.166	9333.	52.800
JUN	30.05409	21	16	82.F	72.F	271.985	0.000					0.000	11912.	58.112
JUL	55.32556	19	14	90.F	75.F	342.844	0.000					0.000	13552.	69.549
AUG	46.67692	16	16	86.F	73.F	290.667	0.000					0.000	12998.	62.229
SEP	14.40371	10	16	82.F	70.F	200.241	-0.253	23	9	39.F	36.F	-32.541	10312.	51.600
OCT	1.45965	12	10	63.F	61.F	170.105	-2.828	21	7	30.F	29.F	-159.663	8972.	47.615
NOV	1.11517	2	16	77.F	62.F	94.408	-20.489	29	7	28.F	27.F	-424.236	11432.	69.041
DEC	0.00000					0.000	-39.674	27	7	31.F	30.F	-528.149	14209.	73.763
TOTAL	160.213						-186.782						137878.	
MAX						342.844						-630.566		73.763

	-----COOLING-----				---HEATING---			DAY COOLING PEAK			
	JUL 19				JAN 4			JUL 19			
HOUR	HOURLY COOLING LOAD (KBTU)	SENSIBLE HEAT RATIO	DRY-BULB TEMP	WET-BULB TEMP	HOURLY HEATING LOAD (KBTU)	DRY-BULB TEMP	WET-BULB TEMP	HOURLY COOLING LOAD (KBTU)	SENSIBLE HEAT RATIO	DRY-BULB TEMP	WET-BULB TEMP
1	0.000	0.000	79.F	72.F	0.000	6.F	6.F	0.000	0.000	79.F	72.F
2	0.000	0.000	79.F	72.F	0.000	5.F	5.F	0.000	0.000	79.F	72.F
3	0.000	0.000	78.F	72.F	0.000	4.F	4.F	0.000	0.000	78.F	72.F
4	0.000	0.000	78.F	72.F	0.000	4.F	4.F	0.000	0.000	78.F	72.F
5	0.000	0.000	77.F	72.F	0.000	3.F	3.F	0.000	0.000	77.F	72.F
6	271.403	0.981	78.F	72.F	-630.566	3.F	3.F	271.403	0.981	78.F	72.F
7	289.034	0.984	77.F	72.F	-515.655	2.F	2.F	289.034	0.984	77.F	72.F
8	325.670	0.735	79.F	72.F	-484.139	2.F	2.F	325.670	0.735	79.F	72.F
9	329.249	0.740	82.F	72.F	-622.435	4.F	3.F	329.249	0.740	82.F	72.F
10	331.076	0.743	85.F	73.F	-574.187	7.F	6.F	331.076	0.743	85.F	73.F
11	338.617	0.751	88.F	74.F	-561.365	11.F	9.F	338.617	0.751	88.F	74.F
12	329.977	0.746	89.F	74.F	-518.553	16.F	13.F	329.977	0.746	89.F	74.F
13	342.844	0.731	90.F	75.F	-507.017	18.F	15.F	342.844	0.731	90.F	75.F
14	338.400	0.726	89.F	75.F	-473.255	20.F	16.F	338.400	0.726	89.F	75.F
15	337.602	0.734	90.F	75.F	-442.998	20.F	16.F	337.602	0.734	90.F	75.F
16	322.681	0.726	91.F	76.F	-420.390	20.F	16.F	322.681	0.726	91.F	76.F
17	301.943	0.738	90.F	75.F	-420.539	19.F	15.F	301.943	0.738	90.F	75.F
18	0.000	0.000	86.F	74.F	-428.133	16.F	13.F	0.000	0.000	86.F	74.F
19	0.000	0.000	86.F	74.F	0.000	13.F	11.F	0.000	0.000	86.F	74.F
20	0.000	0.000	80.F	72.F	0.000	11.F	9.F	0.000	0.000	80.F	72.F
21	0.000	0.000	79.F	72.F	0.000	10.F	8.F	0.000	0.000	79.F	72.F
22	0.000	0.000	77.F	71.F	0.000	11.F	9.F	0.000	0.000	77.F	71.F
23	0.000	0.000	76.F	71.F	0.000	7.F	6.F	0.000	0.000	76.F	71.F
24	0.000	0.000	74.F	70.F	0.000	6.F	5.F	0.000	0.000	74.F	70.F
	--------				--------			---------			
SUM								3858.496			
MAX	342.844				-630.566						

SYSTEM-TYPE	PSZ	SQFT/TON	416.5
COOLING PEAK	28.81 (BTU/HR- SQFT)	HEATING PEAK	-52.99 (BTU/HR- SQFT)
SUPPLY AIR PEAK FLOW	0.92 (CFM/SQFT)	MIN-OA/PERSON	42.50 (CFM)
OA FRAC AT CLG PEAK	0.233	OA FRAC AT HTG PEAK	0.010

* ASTERISKS INDICATE HOURS LOADS NOT MET

31-STORY OFFICE BLDG, CHICAGO - LOAD2 RUN 6 PACKAGED HEAT PUMPS ON PERIMETER DOE-2.1E-001 Wed Nov 10 14:35:12 1993SDL RUN 6
PKG HEAT PUMPS INTERIOR WITH HW COILS -
REPORT- SS-Q HEAT PUMP COOLING SUMMARY FOR CORESY1 WEATHER FILE- TRY CHICAGO

	UNIT RUN TIME (HOURS)	TOTAL LOAD ON UNIT (MBTU)	ENERGY IN TO UNIT (MBTU)	AUXILIARY ENERGY (MBTU)	SUP UNIT LOAD (MBTU)	SUP UNIT ENERGY (MBTU)	WASTE HEAT GENERATED (MBTU)	WASTE HEAT USE (MBTU)		INDOOR FAN ENERGY (MBTU)
JAN	0.	0.000	0.000	0.051	0.000	0.000	0.000	0.000	0.000	1.040
FEB	0.	0.000	0.000	0.046	0.000	0.000	0.000	0.000	0.000	1.030
MAR	1.	0.351	0.109	0.039	0.000	0.000	-0.276	0.000	0.000	0.472
APR	20.	3.128	2.074	0.021	0.000	0.000	-3.121	0.000	0.000	1.523
MAY	40.	7.699	4.387	0.013	0.000	0.000	-7.252	0.000	0.000	2.842
JUN	89.	30.054	12.103	0.001	0.000	0.000	-25.294	0.000	0.000	5.395
JUL	127.	55.326	18.621	0.000	0.000	0.000	-44.368	0.000	0.000	5.406
AUG	109.	46.677	15.546	0.000	0.000	0.000	-37.334	0.000	0.000	5.642
SEP	60.	14.404	7.448	0.006	0.000	0.000	-13.111	0.000	0.000	4.119
OCT	14.	1.460	0.822	0.019	0.000	0.000	-1.369	0.000	0.000	1.105
NOV	7.	1.115	0.799	0.037	0.000	0.000	-1.148	0.000	0.000	0.579
DEC	0.	0.000	0.000	0.044	0.000	0.000	0.000	0.000	0.000	0.225
ANNUAL	467.	160.213	61.908	0.276	0.000	0.000	-133.273	0.000	0.000	29.377

CSPF (WITH PARASITICS) = 1.75 (BTU/BTU)

CSPF (WITHOUT PARASITICS) = 2.59 (BTU/BTU)

31-STORY OFFICE BLDG, CHICAGO - LOAD2 RUN 6 PACKAGED HEAT PUMPS ON PERIMETER DOE-2.1E-001 Wed Nov 10 14:35:12 1993SDL RUN 6
PKG HEAT PUMPS INTERIOR WITH HW COILS -
REPORT- SS-Q HEAT PUMP HEATING SUMMARY FOR CORESY1 WEATHER FILE- TRY CHICAGO

	UNIT RUN TIME (HOURS)	TOTAL LOAD ON UNIT (MBTU)	ENERGY IN TO UNIT (MBTU)	AUXILIARY ENERGY (MBTU)	SUP UNIT LOAD (MBTU)	SUP UNIT ENERGY (MBTU)	WASTE HEAT GENERATED (MBTU)	WASTE HEAT USE (MBTU)	DEFROST LOAD (MBTU)	INDOOR FAN ENERGY (MBTU)
JAN	75.	-18.911	11.695	0.051	-31.026	0.000	0.000	0.000	0.000	4.129
FEB	79.	-19.717	11.806	0.046	-21.573	0.000	0.000	0.000	0.000	3.861
MAR	70.	-20.461	13.111	0.041	-5.640	0.000	0.000	0.000	0.000	5.427
APR	17.	-5.252	5.054	0.026	0.000	0.000	0.000	0.000	0.000	3.883
MAY	2.	-0.915	1.402	0.016	0.000	0.000	0.000	0.000	0.000	1.920
JUN	0.	0.000	0.000	0.001	0.000	0.000	0.000	0.000	0.000	0.054
JUL	0.	0.000	0.000	0.000	0.000	0.000	0.000	0.000	0.000	0.000
AUG	0.	0.000	0.000	0.000	0.000	0.000	0.000	0.000	0.000	0.000
SEP	1.	-0.253	0.561	0.008	0.000	0.000	0.000	0.000	0.000	0.901
OCT	8.	-2.828	3.633	0.025	0.000	0.000	0.000	0.000	0.000	3.743
NOV	70.	-19.552	11.898	0.042	-0.937	0.000	0.000	0.000	0.000	4.462
DEC	137.	-33.847	20.778	0.044	-5.827	0.000	0.000	0.000	0.000	5.180
ANNUAL	459.	-121.735	79.938	0.299	-65.003	0.000	0.000	0.000	0.000	33.560

HSPF (WITH PARASITICS) = 1.94 (BTU/BTU)

HSPF (WITHOUT PARASITICS) = 2.34 (BTU/BTU)

31-STORY OFFICE BLDG, CHICAGO - LOAD2 RUN 6 PACKAGED HEAT PUMPS ON PERIMETER DOE-2.1E-001 Wed Nov 10 14:35:12 1993SDL RUN 6
PKG HEAT PUMPS INTERIOR WITH HW COILS -
REPORT- SS-A SYSTEM MONTHLY LOADS SUMMARY FOR CORESY2 WEATHER FILE- TRY CHICAGO

	COOLING						HEATING						ELEC	
MONTH	COOLING ENERGY (MBTU)	TIME OF MAX DY	TIME OF MAX HR	DRY-BULB TEMP	WET-BULB TEMP	MAXIMUM COOLING LOAD (KBTU/HR)	HEATING ENERGY (MBTU)	TIME OF MAX DY	TIME OF MAX HR	DRY-BULB TEMP	WET-BULB TEMP	MAXIMUM HEATING LOAD (KBTU/HR)	ELEC-TRICAL ENERGY (KWH)	MAXIMUM ELEC LOAD (KW)
JAN	0.00000					0.000	-711.032	4	7	2.F	2.F	-15790.595	290457.	1634.263
FEB	0.00000					0.000	-558.677	8	7	5.F	5.F	-8624.273	280702.	1725.835
MAR	17.38572	3	10	63.F	59.F	3154.287	-235.833	1	7	28.F	26.F	-5492.975	321409.	1558.530
APR	182.43706	28	15	78.F	68.F	4773.467	-16.035	1	7	40.F	37.F	-2005.673	296435.	1424.245
MAY	351.74741	21	13	87.F	76.F	6560.207	-1.861	13	9	47.F	43.F	-316.810	286095.	1644.077
JUN	1008.42896	21	16	82.F	72.F	8109.690	0.000	17	8	54.F	48.F	-0.003	361649.	1738.221
JUL	1562.11914	19	14	90.F	75.F	9760.990	0.000					0.000	398291.	2035.813
AUG	1389.13306	16	15	85.F	73.F	8639.983	0.000					0.000	388669.	1867.276
SEP	595.80469	10	16	82.F	70.F	6049.269	-0.549	23	9	39.F	36.F	-178.341	318866.	1562.074
OCT	143.77969	29	16	64.F	62.F	3011.577	-4.129	21	9	31.F	29.F	-243.529	268247.	1419.950
NOV	60.05118	2	16	77.F	62.F	3750.414	-200.479	29	7	28.F	27.F	-6499.085	290898.	1704.842
DEC	0.04403	2	14	43.F	38.F	44.028	-518.455	27	7	31.F	30.F	-8632.745	354817.	1880.844
TOTAL	5310.937						-2247.051						3856427.	
MAX						9760.990						-15790.595		2035.813

	-----COOLING-----				---HEATING---			DAY COOLING PEAK			
	JUL 19				JAN 4			JUL 19			
HOUR	HOURLY COOLING LOAD (KBTU)	SENSIBLE HEAT RATIO	DRY-BULB TEMP	WET-BULB TEMP	HOURLY HEATING LOAD (KBTU)	DRY-BULB TEMP	WET-BULB TEMP	HOURLY COOLING LOAD (KBTU)	SENSIBLE HEAT RATIO	DRY-BULB TEMP	WET-BULB TEMP
1	0.000	0.000	79.F	72.F	0.000	6.F	6.F	0.000	0.000	79.F	72.F
2	0.000	0.000	79.F	72.F	0.000	5.F	5.F	0.000	0.000	79.F	72.F
3	0.000	0.000	78.F	72.F	0.000	4.F	4.F	0.000	0.000	78.F	72.F
4	0.000	0.000	78.F	72.F	0.000	4.F	4.F	0.000	0.000	78.F	72.F
5	0.000	0.000	77.F	72.F	0.000	3.F	3.F	0.000	0.000	77.F	72.F
6	7122.529	0.979	78.F	72.F	0.000	3.F	3.F	7122.529	0.979	78.F	72.F
7	7830.493	0.982	77.F	72.F	-15790.595	2.F	2.F	7830.493	0.982	77.F	72.F
8	9172.132	0.724	79.F	72.F	-11090.229	2.F	2.F	9172.132	0.724	79.F	72.F
9	9321.367	0.729	82.F	72.F	-12985.613	4.F	3.F	9321.367	0.729	82.F	72.F
10	9392.708	0.733	85.F	73.F	-11380.596	7.F	6.F	9392.708	0.733	85.F	73.F
11	9634.715	0.742	88.F	74.F	-10448.363	11.F	9.F	9634.715	0.742	88.F	74.F
12	9367.346	0.736	89.F	74.F	-9437.440	16.F	13.F	9367.346	0.736	89.F	74.F
13	9760.990	0.719	90.F	75.F	-9234.561	18.F	15.F	9760.990	0.719	90.F	75.F
14	9588.977	0.712	89.F	75.F	-8357.281	20.F	16.F	9588.977	0.712	89.F	75.F
15	9522.103	0.719	90.F	75.F	-7801.985	20.F	16.F	9522.103	0.719	90.F	75.F
16	9024.058	0.708	91.F	76.F	-7367.381	20.F	16.F	9024.058	0.708	91.F	76.F
17	8359.319	0.718	90.F	75.F	-7592.999	19.F	15.F	8359.319	0.718	90.F	75.F
18	0.000	0.000	86.F	74.F	-7864.269	16.F	13.F	0.000	0.000	86.F	74.F
19	0.000	0.000	86.F	74.F	0.000	13.F	11.F	0.000	0.000	86.F	74.F
20	0.000	0.000	80.F	72.F	0.000	11.F	9.F	0.000	0.000	80.F	72.F
21	0.000	0.000	79.F	72.F	0.000	10.F	8.F	0.000	0.000	79.F	72.F
22	0.000	0.000	77.F	71.F	0.000	11.F	9.F	0.000	0.000	77.F	71.F
23	0.000	0.000	76.F	71.F	0.000	7.F	6.F	0.000	0.000	76.F	71.F
24	0.000	0.000	74.F	70.F	0.000	6.F	5.F	0.000	0.000	74.F	70.F
	---				---			---			
SUM								108096.742			
MAX	9760.990				-15790.595						

SYSTEM-TYPE	PSZ	SQFT/TON	438.9
COOLING PEAK	27.34 (BTU/HR- SQFT)	HEATING PEAK	-44.23 (BTU/HR- SQFT)
SUPPLY AIR PEAK FLOW	0.92 (CFM/SQFT)	MIN-OA/PERSON	42.50 (CFM)
OA FRAC AT CLG PEAK	0.233	OA FRAC AT HTG PEAK	0.010

* ASTERISKS INDICATE HOURS LOADS NOT MET

REPORT- SS-Q HEAT PUMP COOLING SUMMARY FOR CORESY2 WEATHER FILE- TRY CHICAGO

	UNIT RUN TIME (HOURS)	TOTAL LOAD ON UNIT (MBTU)	ENERGY IN TO UNIT (MBTU)	AUXILIARY ENERGY (MBTU)	SUP UNIT LOAD (MBTU)	SUP UNIT ENERGY (MBTU)	WASTE HEAT GENERATED (MBTU)	WASTE HEAT USE (MBTU)		INDOOR FAN ENERGY (MBTU)
JAN	0.	0.000	0.000	0.051	0.000	0.000	0.000	0.000	0.000	31.212
FEB	0.	0.000	0.000	0.046	0.000	0.000	0.000	0.000	0.000	32.177
MAR	5.	17.386	10.305	0.042	0.000	0.000	-16.615	0.000	0.000	29.924
APR	32.	182.437	104.052	0.024	0.000	0.000	-171.894	0.000	0.000	81.086
MAY	48.	351.747	188.276	0.014	0.000	0.000	-324.014	0.000	0.000	111.975
JUN	90.	1008.429	376.077	0.001	0.000	0.000	-830.704	0.000	0.000	162.171
JUL	119.	1562.119	530.457	0.000	0.000	0.000	-1255.545	0.000	0.000	162.171
AUG	107.	1389.133	462.023	0.000	0.000	0.000	-1110.694	0.000	0.000	169.250
SEP	65.	595.805	266.599	0.007	0.000	0.000	-517.442	0.000	0.000	136.751
OCT	35.	143.780	112.716	0.023	0.000	0.000	-153.898	0.000	0.000	91.382
NOV	10.	60.051	30.016	0.040	0.000	0.000	-54.040	0.000	0.000	34.107
DEC	0.	0.044	0.044	0.044	0.000	0.000	-0.053	0.000	0.000	7.722
ANNUAL	512.	5310.931	2080.567	0.292	0.000	0.000	-4434.899	0.000	0.000	1049.930

CSPF (WITH PARASITICS) = 1.70 (BTU/BTU)

CSPF (WITHOUT PARASITICS) = 2.55 (BTU/BTU)

31-STORY OFFICE BLDG, CHICAGO - LOAD2 RUN 6 PACKAGED HEAT PUMPS ON PERIMETER DOE-2.1E-001 Wed Nov 10 14:35:12 1993SDL RUN 6
PKG HEAT PUMPS INTERIOR WITH HW COILS -
REPORT- SS-Q HEAT PUMP HEATING SUMMARY FOR CORESY2 WEATHER FILE- TRY CHICAGO

	UNIT RUN TIME (HOURS)	TOTAL LOAD ON UNIT (MBTU)	ENERGY IN TO UNIT (MBTU)	AUXILIARY ENERGY (MBTU)	SUP UNIT LOAD (MBTU)	SUP UNIT ENERGY (MBTU)	WASTE HEAT GENERATED (MBTU)	WASTE HEAT USE (MBTU)	DEFROST LOAD (MBTU)	INDOOR FAN ENERGY (MBTU)
JAN	27.	-206.017	198.553	0.054	-505.015	0.000	0.000	0.000	0.000	123.237
FEB	34.	-249.730	208.081	0.050	-308.947	0.000	0.000	0.000	0.000	114.549
MAR	19.	-158.513	189.699	0.056	-77.320	0.000	0.000	0.000	0.000	143.187
APR	2.	-16.035	56.904	0.032	0.000	0.000	0.000	0.000	0.000	76.581
MAY	0.	-1.861	7.689	0.015	0.000	0.000	0.000	0.000	0.000	30.246
JUN	0.	0.000	0.427	0.001	0.000	0.000	0.000	0.000	0.000	2.574
JUL	0.	0.000	0.000	0.000	0.000	0.000	0.000	0.000	0.000	0.000
AUG	0.	0.000	0.000	0.000	0.000	0.000	0.000	0.000	0.000	0.000
SEP	0.	-0.549	3.970	0.008	0.000	0.000	0.000	0.000	0.000	16.410
OCT	0.	-4.129	22.957	0.028	0.000	0.000	0.000	0.000	0.000	50.196
NOV	25.	-200.479	179.327	0.048	0.000	0.000	0.000	0.000	0.000	113.262
DEC	62.	-455.988	381.951	0.047	-62.467	0.000	0.000	0.000	0.000	154.449
ANNUAL	171.	-1293.301	1249.557	0.339	-953.749	0.000	0.000	0.000	0.000	824.692

HSPF (WITH PARASITICS) = 1.48 (BTU/BTU)

HSPF (WITHOUT PARASITICS) = 1.80 (BTU/BTU)

31-STORY OFFICE BLDG. CHICAGO - LOAD2 RUN 6 PACKAGED HEAT PUMPS ON PERIMETER DOE-2.1E-001 Wed Nov 10 14:35:12 1993SDL RUN 6
PKG HEAT PUMPS INTERIOR WITH HW COILS -
REPORT- SS-A SYSTEM MONTHLY LOADS SUMMARY FOR BASEMT WEATHER FILE- TRY CHICAGO

	COOLING						HEATING						ELEC	
MONTH	COOLING ENERGY (MBTU)	TIME OF MAX DY	TIME OF MAX HR	DRY-BULB TEMP	WET-BULB TEMP	MAXIMUM COOLING LOAD (KBTU/HR)	HEATING ENERGY (MBTU)	TIME OF MAX DY	TIME OF MAX HR	DRY-BULB TEMP	WET-BULB TEMP	MAXIMUM HEATING LOAD (KBTU/HR)	ELEC-TRICAL ENERGY (KWH)	MAXIMUM ELEC LOAD (KW)
JAN	0.00000					0.000	-24.363	4	7	2.F	2.F	-526.436	11592.	44.199
FEB	0.00000					0.000	-22.830	8	7	5.F	5.F	-296.047	10998.	44.199
MAR	0.00000					0.000	-16.039	1	7	28.F	26.F	-232.407	13147.	44.199
APR	0.00000					0.000	-2.870	19	7	38.F	36.F	-135.569	12471.	44.199
MAY	1.52248	21	13	87.F	76.F	163.366	0.000					0.000	11569.	61.408
JUN	9.99842	9	15	83.F	73.F	174.230	0.000					0.000	13455.	62.530
JUL	32.77458	13	17	97.F	78.F	243.872	0.000					0.000	15553.	73.885
AUG	28.83860	26	17	94.F	76.F	244.056	0.000					0.000	15510.	73.095
SEP	6.94092	10	17	83.F	70.F	190.271	0.000					0.000	12619.	65.415
OCT	1.53752	28	17	73.F	60.F	113.666	0.000	4	8	49.F	41.F	-0.001	11568.	55.580
NOV	0.46544	2	16	77.F	62.F	93.764	-0.972	29	8	29.F	27.F	-81.216	11440.	53.254
DEC	0.00000					0.000	-11.335	27	7	31.F	30.F	-215.421	12028.	44.199
TOTAL	82.078						-78.409						151948.	
MAX						244.056						-526.436		73.885

	-----COOLING-----				---HEATING---			DAY COOLING PEAK			
	AUG 26				JAN 4			JUL 13			
HOUR	HOURLY COOLING LOAD (KBTU)	SENSIBLE HEAT RATIO	DRY-BULB TEMP	WET-BULB TEMP	HOURLY HEATING LOAD (KBTU)	DRY-BULB TEMP	WET-BULB TEMP	HOURLY COOLING LOAD (KBTU)	SENSIBLE HEAT RATIO	DRY-BULB TEMP	WET-BULB TEMP
1	0.000	0.000	68.F	62.F	0.000	6.F	6.F	0.000	0.000	76.F	66.F
2	0.000	0.000	68.F	62.F	0.000	5.F	5.F	0.000	0.000	74.F	66.F
3	0.000	0.000	69.F	62.F	0.000	4.F	4.F	0.000	0.000	74.F	65.F
4	0.000	0.000	69.F	63.F	0.000	4.F	4.F	0.000	0.000	73.F	62.F
5	0.000	0.000	69.F	63.F	0.000	3.F	3.F	0.000	0.000	72.F	62.F
6	0.000	0.000	68.F	62.F	0.000	3.F	3.F	0.000	0.000	72.F	63.F
7	0.000	0.000	68.F	63.F	-526.436	2.F	2.F	133.172	0.797	73.F	65.F
8	0.000	0.000	70.F	65.F	-451.202	2.F	2.F	163.993	0.703	76.F	69.F
9	180.820	0.742	76.F	69.F	-431.067	4.F	3.F	188.855	0.701	82.F	72.F
10	210.128	0.719	82.F	72.F	-400.797	7.F	6.F	205.045	0.695	86.F	74.F
11	218.015	0.726	85.F	73.F	-371.186	11.F	9.F	220.807	0.682	89.F	76.F
12	219.671	0.733	89.F	74.F	-339.994	16.F	13.F	230.983	0.666	93.F	78.F
13	218.920	0.734	89.F	74.F	-325.370	18.F	15.F	229.744	0.689	95.F	78.F
14	231.512	0.724	90.F	75.F	-304.169	20.F	16.F	227.120	0.730	96.F	77.F
15	223.673	0.749	90.F	74.F	-284.785	20.F	16.F	230.313	0.736	97.F	77.F
16	244.056	0.737	94.F	76.F	-270.812	20.F	16.F	243.872	0.710	97.F	78.F
17	227.821	0.748	93.F	75.F	-257.851	19.F	15.F	227.929	0.752	99.F	77.F
18	0.000	0.000	91.F	74.F	-260.725	16.F	13.F	0.000	0.000	97.F	76.F
19	0.000	0.000	89.F	74.F	0.000	13.F	11.F	0.000	0.000	95.F	75.F
20	0.000	0.000	85.F	73.F	0.000	11.F	9.F	0.000	0.000	93.F	75.F
21	0.000	0.000	82.F	72.F	0.000	10.F	8.F	0.000	0.000	90.F	74.F
22	0.000	0.000	81.F	71.F	0.000	11.F	9.F	0.000	0.000	87.F	73.F
23	0.000	0.000	79.F	71.F	0.000	7.F	6.F	0.000	0.000	86.F	73.F
24	0.000	0.000	77.F	70.F	0.000	6.F	5.F	0.000	0.000	85.F	73.F
	---				---			---			
SUM								2301.832			
MAX	244.056				-526.436						

SYSTEM-TYPE	PSZ	SQFT/TON	983.4
COOLING PEAK	12.20 (BTU/HR- SQFT)	HEATING PEAK	-26.32 (BTU/HR- SQFT)
SUPPLY AIR PEAK FLOW	1.36 (CFM/SQFT)		
OA FRAC AT CLG PEAK	0.094	OA FRAC AT HTG PEAK	0.094

* ASTERISKS INDICATE HOURS LOADS NOT MET

EQUIPMENT	SIZE (MBTU/H)	NUMBER INSTD	NUMBER AVAIL	SIZE (MBTU/H)	NUMBER INSTD	NUMBER AVAIL	SIZE (MBTU/H)	NUMBER INSTD	NUMBER AVAIL	SIZE (MBTU/H)	NUMBER INSTD	NUMBER AVAIL	SIZE (MBTU/H)	NUMBER INSTD	NUMBER AVAIL	SIZE (MBTU/H)	NUMBER INSTD	NUMBER AVAIL
HW-BOILER	15.000	1	1															
DHW-HEATER	0.100	1	1															
DIESEL-GEN	1.020	2	2															

31-STORY OFFICE BLDG, CHICAGO - LOAD2 RUN 6 PACKAGED HEAT PUMPS ON PERIMETER DOE-2.1E-001 Wed Nov 10 14:35:12 1993PDL RUN 6
PKG HEAT PUMPS INTERIOR WITH HW COILS -
REPORT- PS-A PLANT ENERGY UTILIZATION SUMMARY WEATHER FILE- TRY CHICAGO

	SITE ENERGY												SOURCE
	2	3	4	5	6	7	8	9	10	11	12	13	14
MONTH	TOTAL HEAT LOAD (MBTU)	TOTAL COOLING LOAD (MBTU)	TOTAL ELECTR LOAD (MWH)	RCVRED ENERGY (MBTU)	WASTED RCVRABL ENERGY (MBTU)	FUEL INPUT COOLING (MBTU)	ELEC INPUT COOLING (MWH)	FUEL INPUT HEATING (MBTU)	ELEC INPUT HEATING (MWH)	FUEL INPUT ELECT (MBTU)	TOTAL FUEL INPUT (MBTU)	TOTAL SITE ENERGY (MBTU)	TOTAL SOURCE ENERGY (MBTU)
JAN	603.5	0.0	620.6	0.0	0.0	0.0	12.8	883.6	240.7	14.1	897.7	3011.6	7239.9
FEB	395.3	0.0	561.2	0.0	0.0	0.0	19.2	621.4	201.6	21.2	642.6	2551.5	6370.1
MAR	145.3	0.0	568.3	0.0	0.0	0.0	48.5	231.6	120.7	0.0	231.6	2171.1	6050.7
APR	30.0	0.0	539.0	0.0	0.0	0.0	132.6	45.3	33.2	35.4	80.7	1909.7	5568.2
MAY	15.0	0.0	515.3	0.0	0.0	0.0	171.7	22.7	4.0	42.4	65.1	1810.9	5302.9
JUN	15.2	0.0	642.1	0.0	0.0	0.0	271.8	22.9	0.1	318.2	341.1	2436.4	6627.4
JUL	13.5	0.0	711.0	0.0	0.0	0.0	352.5	20.6	0.0	954.7	975.3	3112.8	7388.4
AUG	13.7	0.0	688.8	0.0	0.0	0.0	313.0	20.9	0.0	678.9	699.9	2845.1	7136.3
SEP	13.5	0.0	565.0	0.0	0.0	0.0	200.9	20.5	2.3	127.3	147.8	2037.7	5818.0
OCT	13.8	0.0	478.9	0.0	0.0	0.0	112.6	21.0	13.7	0.0	21.0	1655.5	4925.1
NOV	22.4	0.0	513.5	0.0	0.0	0.0	47.8	34.7	104.7	7.1	41.7	1792.3	5293.9
DEC	122.8	0.0	628.5	0.0	0.0	0.0	8.8	193.9	234.0	35.4	229.2	2363.6	6633.0
TOTAL	1404.1	0.0	7032.4	0.0	0.0	0.0	1692.2	2139.0	955.0	2234.8	4373.8	27698.1	74353.8

31-STORY OFFICE BLDG, CHICAGO - LOAD2 RUN 6 PACKAGED HEAT PUMPS ON PERIMETER DOE-2.1E-001 Wed Nov 10 14:35:12 1993PDL RUN 6
PKG HEAT PUMPS INTERIOR WITH HW COILS -

REPORT- PS-B MONTHLY UTILITY AND FUEL USE SUMMARY WEATHER FILE- TRY CHICAGO

MONTH	BTU/UNIT:	ELECTRICITY METER-1 3413./KWH	NATURAL-GAS METER-1 100000./THERMS	NATURAL-GAS METER-2 100000./THERMS	ELECTRICITY COGENERATION 3413./KWH
JAN					
ENERGY CONSUMPTION (UNITS/MO)		620614.2	8835.6	141.4	1255.2
PEAK DEMAND (UNITS/HR OR DAY)		2675.4	207.7	70.7	627.6
	PEAK DAY/HR	18/ 8	4/ 7	12/ 8	12/ 8
FEB					
ENERGY CONSUMPTION (UNITS/MO)		561212.8	6213.5	212.2	1882.8
PEAK DEMAND (UNITS/HR OR DAY)		2770.8	128.6	70.7	627.6
	PEAK DAY/HR	16/ 8	8/ 7	1/ 8	1/ 8
MAR					
ENERGY CONSUMPTION (UNITS/MO)		568276.8	2316.2	0.0	0.0
PEAK DEMAND (UNITS/HR OR DAY)		2511.1	74.5	0.0	0.0
	PEAK DAY/HR	3/16	24/ 9	0/ 0	0/ 0
APR					
ENERGY CONSUMPTION (UNITS/MO)		539026.4	453.3	353.6	3138.0
PEAK DEMAND (UNITS/HR OR DAY)		2772.3	4.6	70.7	627.6
	PEAK DAY/HR	27/16	5/ 9	20/16	20/16
MAY					
ENERGY CONSUMPTION (UNITS/MO)		515265.8	226.9	424.3	3765.6
PEAK DEMAND (UNITS/HR OR DAY)		3056.3	1.4	70.7	627.6
	PEAK DAY/HR	21/14	3/ 9	20/15	20/15
JUN					
ENERGY CONSUMPTION (UNITS/MO)		642143.2	228.9	3182.4	28242.3
PEAK DEMAND (UNITS/HR OR DAY)		3263.2	1.3	70.7	627.6
	PEAK DAY/HR	21/16	1/ 9	1/16	1/16
JUL					
ENERGY CONSUMPTION (UNITS/MO)		711012.9	205.8	9547.2	84726.9
PEAK DEMAND (UNITS/HR OR DAY)		3805.7	1.2	70.7	627.6
	PEAK DAY/HR	13/16	1/ 9	1/11	1/11
AUG					
ENERGY CONSUMPTION (UNITS/MO)		688814.8	209.4	6789.1	60250.1
PEAK DEMAND (UNITS/HR OR DAY)		3342.6	1.1	70.7	627.6
	PEAK DAY/HR	19/16	2/ 9	2/12	2/12
SEP					
ENERGY CONSUMPTION (UNITS/MO)		565035.1	205.0	1273.0	11296.9
PEAK DEMAND (UNITS/HR OR DAY)		3016.7	1.2	70.7	627.6
	PEAK DAY/HR	10/15	1/ 9	7/14	7/14
OCT					
ENERGY CONSUMPTION (UNITS/MO)		478911.9	210.4	0.0	0.0
PEAK DEMAND (UNITS/HR OR DAY)		2616.6	1.9	0.0	0.0
	PEAK DAY/HR	5/16	4/ 8	0/ 0	0/ 0
NOV					
ENERGY CONSUMPTION (UNITS/MO)		513534.6	346.7	70.7	627.6
PEAK DEMAND (UNITS/HR OR DAY)		2751.8	5.5	70.7	627.6
	PEAK DAY/HR	15/ 7	29/ 9	15/ 7	15/ 7
DEC					
ENERGY CONSUMPTION (UNITS/MO)		628507.2	1938.5	353.6	3138.0
PEAK DEMAND (UNITS/HR OR DAY)		3095.1	109.6	70.7	627.6
	PEAK DAY/HR	27/ 8	20/ 7	13/ 8	13/ 8
TOTAL					
ENERGY CONSUMPTION (UNITS/YR)		7032355.5	21390.4	22347.5	198323.5
PEAK DEMAND (UNITS/HR OR DAY)		3805.7	207.7	70.7	627.6

EQUIPMENT	HOURS AT PERCENT PART LOAD RATIO											TOTAL HOURS	ANNUAL LOAD (MBTU)	FALSE LOAD (MBTU)	ELEC USED (KWH)	THERMAL USED (MBTU)
	0 -- 10	-- 20	-- 30	-- 40	-- 50	-- 60	-- 70	-- 80	-- 90	-- 100	- 110+	-----	------	------	------	------
HW-BOILER	826	61	89	54	16	12	5	1	2	1	1	1068	1216.9	0.0	24548.	1865.0
	826	61	89	54	16	12	5	1	2	1	1					
DHW-HEATER	6186	315	146	251	105	0	128	164	592	348	525	8760	182.0	0.0	0.	274.0
	6186	315	146	251	105	0	128	164	592	348	525					
DIESEL-GEN	0	0	0	0	0	0	0	0	0	0	316	316	676.9	0.0	0.	2234.8
	0	0	0	0	0	0	0	0	0	0	316					

HOT LOOP CIRCULATION PUMP ELECTRICAL USE = 19534. KWH
COLD LOOP CIRCULATION PUMP ELECTRICAL USE = 0. KWH
CONDENSER WATER PUMP ELECTRICAL USE = 0. KWH
TOWER OR CONDENSER FAN ELECTRICAL USE = 0. KWH

NOTES TO TABLE
1) THE FIRST PART LOAD ENTRY FOR EACH PIECE OF EQUIPMENT IS THE HOURLY LOAD DIVIDED BY THE HOURLY OPERATING CAPACITY

2) THE SECOND PART LOAD ENTRY FOR EACH PIECE OF EQUIPMENT IS THE HOURLY LOAD DIVIDED BY THE TOTAL INSTALLED CAPACITY

HEATING LOADS	MBTU SUPPLIED	PCT OF TOTAL LOAD
HW-BOILER	1216.9	86.7
DHW-HEATER	182.0	13.0
LOAD SATISFIED	1398.9	99.6
TOTAL LOAD ON PLANT	1404.1	

ELECTRICAL LOADS	KWH SUPPLIED	PCT OF TOTAL LOAD
DIESEL-GEN	198324.4	2.8
ELECTRICITY	6834032.0	97.2
LOAD SATISFIED	7032356.0	100.0
TOTAL LOAD ON PLANT	7032264.5	

SUMMARY OF LOADS MET

TYPE OF LOAD	TOTAL LOAD (MBTU)	LOAD SATISFIED (MBTU)	TOTAL OVERLOAD (MBTU)	PEAK OVERLOAD (MBTU)	HOURS OVERLOADED
HEATING LOADS	1404.1	1398.9	5.201	0.014	525
ELECTRICAL LOADS	24000.9	24001.2	0.000	0.000	0

ENERGY TYPE:	ELECTRICITY	NATURAL-GAS
UNITS: MBTU		
CATEGORY OF USE		
AREA LIGHTS	8672.8	477.8
MISC EQUIPMT	3881.6	381.9
SPACE HEAT	2813.7	1911.1
SPACE COOL	5426.9	1151.1
PUMPS & MISC	68.5	0.5
VENT FANS	2097.2	173.0
SUPPLMT HEAT	363.8	4.0
DOMHOT WATER	0.0	274.0
COGEN SURPLS	-0.1	0.4
TOTAL	23324.3	4373.8

TOTAL SITE ENERGY 27698.14 MBTU 43.3 KBTU/SQFT-YR GROSS-AREA 43.3 KBTU/SQFT-YR NET-AREA
TOTAL SOURCE ENERGY 74353.80 MBTU 116.2 KBTU/SQFT-YR GROSS-AREA 116.2 KBTU/SQFT-YR NET-AREA

PERCENT OF HOURS ANY SYSTEM ZONE OUTSIDE OF THROTTLING RANGE = 0.2
PERCENT OF HOURS ANY PLANT LOAD NOT SATISFIED = 6.0

NOTE: ENERGY IS APPORTIONED HOURLY TO ALL END-USE CATEGORIES.

31-STORY OFFICE BLDG, CHICAGO - LOAD2 RUN 6 PACKAGED HEAT PUMPS ON PERIMETER DOE-2.1E-001 Wed Nov 10 14:35:12 1993EDL RUN 6
PKG HEAT PUMPS INTERIOR WITH HW COILS -

REPORT- ES-D ENERGY COST SUMMARY

UTILITY-RATE	RESOURCE	METERS	METERED ENERGY UNITS/YR	TOTAL CHARGE ($)	VIRTUAL RATE ($/UNIT)	RATE USED ALL YEAR?
ELEC-COST	ELECTRICITY	1 2 3 4 5	7032356. KWH	934914.	0.1329	YES
GAS-COST	NATURAL-GAS	1 2 3 4 5	43738. THERMS	26243.	0.6000	YES
				==========		
				961156.		

ENERGY COST/GROSS BLDG AREA: 1.50
ENERGY COST/NET BLDG AREA: 1.50

**** WARNING **** UTILITY-RATES DO NOT ACCOUNT FOR ALL THE ENERGY REPORTED IN PLANT ****

31-STORY OFFICE BLDG, CHICAGO - LOAD2 RUN 6 PACKAGED HEAT PUMPS ON PERIMETER DOE-2.1E-001 Wed Nov 10 14:35:12 1993EDL RUN 6
PKG HEAT PUMPS INTERIOR WITH HW COILS -

REPORT- ES-E SUMMARY OF UTILITY-RATE: ELEC-COST

UTILITY-RATE: ELEC-COST
RESOURCE: ELECTRICITY
METERS: 1 2 3 4 5
POWER-FACTOR: 0.80
DEMAND-WINDOW: HOUR
BILLING-DAY: 31
EXCESS-KVAR-FRAC: 0.30
3413. BTU/KWH
RATE-LIMITATION: 0.0000
EXCESS-KVAR-CHG: 0.0000

RATE-QUALIFICATIONS

MIN-ENERGY: 0.0
MAX-ENERGY: 0.0
MIN-DEMAND: 0.0
MAX-DEMAND: 0.0
QUALIFY-RATE: ALL-MONTHS
USE-MIN-QUAL: NO

BLOCK-CHARGES

SUMMER-DEMAND
WINTER-DEMAND

DEMAND-RATCHETS

WIN-RATCHET
SUM-RATCHET

MIN-MON-RATCHETS

MONTH	METERED ENERGY KWH	BILLING ENERGY KWH	METERED DEMAND KW	BILLING DEMAND KW	ENERGY CHARGE ($)	DEMAND CHARGE ($)	ENERGY CST ADJ ($)	TAXES ($)	SURCHRG ($)	FIXED CHARGE ($)	MINIMUM CHARGE ($)	VIRTUAL RATE ($/UNIT)	TOTAL CHARGE ($)
JAN	620614	620614	2675.4	3805.7	31031	38057	0	0	0	500	0	0.1121	69588
FEB	561213	561213	2770.8	3805.7	28061	38057	0	0	0	500	0	0.1187	66618
MAR	568277	568277	2511.1	3805.7	28414	38057	0	0	0	500	0	0.1178	66971
APR	539026	539026	2772.3	3805.7	26951	49474	0	0	0	1000	0	0.1436	77426
MAY	515266	515266	3056.3	3805.7	25763	57086	0	0	0	1000	0	0.1627	83849
JUN	642143	642143	3263.2	3805.7	32107	57086	0	0	0	1000	0	0.1405	90193
JUL	711013	711013	3805.7	3805.7	35551	57086	0	0	0	1000	0	0.1317	93637
AUG	688815	688815	3342.6	3805.7	34441	57086	0	0	0	1000	0	0.1343	92527
SEP	565035	565035	3016.7	3805.7	28252	57086	0	0	0	1000	0	0.1528	86338
OCT	478912	478912	2616.6	3805.7	23946	49106	0	0	0	500	0	0.1536	73552
NOV	513535	513535	2751.8	3805.7	25677	38057	0	0	0	500	0	0.1251	64234
DEC	628507	628507	3095.1	3805.7	31425	38057	0	0	0	500	0	0.1113	69983
TOTAL	7032356	7032356	3805.7		351618	574296	0	0	0	9000		0.1329	934914

REPORT- ES-F BLOCK-CHARGE AND RATCHET SUMMARY FOR: ELEC-COST

UTILITY-RATE: ELEC-COST
RESOURCE: ELECTRICITY
ENERGY-UNITS: KWH
DEMAND-UNITS: KW
DEMAND-WINDOW: HOUR

BLOCK-CHARGES	JAN	FEB	MAR	APR	MAY	JUN	JUL	AUG	SEP	OCT	NOV	DEC	YEAR
SUMMER-DEMAND USE: SEASONAL													
METERED DEMAND:	0.0	0.0	0.0	2772.3	3056.3	3263.2	3805.7	3342.6	3016.7	2616.6	0.0	0.0	
BILLING DEMAND:	0.0	0.0	0.0	3805.7	3805.7	3805.7	3805.7	3805.7	3805.7	3805.7	0.0	0.0	
PRORATE FACTOR:	0.0000	0.0000	0.0000	0.6000	1.0000	1.0000	1.0000	1.0000	1.0000	0.5806	0.0000	0.0000	
DEMAND CHGS($):	0	0	0	34252	57086	57086	57086	57086	57086	33147	0	0	352827
WINTER-DEMAND USE: SEASONAL													
METERED DEMAND:	2675.4	2770.8	2511.1	2429.4	0.0	0.0	0.0	0.0	0.0	2540.3	2751.8	3095.1	
BILLING DEMAND:	3805.7	3805.7	3805.7	3805.7	0.0	0.0	0.0	0.0	0.0	3805.7	3805.7	3805.7	
PRORATE FACTOR:	1.0000	1.0000	1.0000	0.4000	0.0000	0.0000	0.0000	0.0000	0.0000	0.4194	1.0000	1.0000	
DEMAND CHGS($):	38057	38057	38057	15223	0	0	0	0	0	15959	38057	38057	221469
TOTAL CHARGES ($):	38057	38057	38057	49474	57086	57086	57086	57086	57086	49106	38057	38057	574296

RATCHETS	TYPE	JAN	FEB	MAR	APR	MAY	JUN	JUL	AUG	SEP	OCT	NOV	DEC
WIN-RATCHET	AVERAGE	2452.5	2314.7	2244.8	2099.7	0.0	0.0	0.0	0.0	0.0	2112.1	2249.1	2484.9
SUM-RATCHET	HIGHEST	3805.7	3805.7	3805.7	3805.7	3805.7	3805.7	3805.7	3805.7	3805.7	3805.7	3805.7	3805.7

REPORT- ES-E SUMMARY OF UTILITY-RATE: GAS-COST

UTILITY-RATE: GAS-COST
RESOURCE: NATURAL-GAS
METERS: 1 2 3 4 5
DEMAND-WINDOW: HOUR
BILLING-DAY: 31
100000. BTU/THERMS
RATE-LIMITATION: 0.0000

RATE-QUALIFICATIONS

MIN-ENERGY:	0.0
MAX-ENERGY:	0.0
MIN-DEMAND:	0.0
MAX-DEMAND:	0.0
QUALIFY-RATE:	ALL-MONTHS
USE-MIN-QUAL:	NO

BLOCK-CHARGES

DEMAND-RATCHETS

MIN-MON-RATCHETS

MONTH	METERED ENERGY THERMS	BILLING ENERGY THERMS	METERED DEMAND THERMS	BILLING DEMAND THERMS	ENERGY CHARGE ($)	DEMAND CHARGE ($)	ENERGY CST ADJ ($)	TAXES ($)	SURCHRG ($)	FIXED CHARGE ($)	MINIMUM CHARGE ($)	VIRTUAL RATE ($/UNIT)	TOTAL CHARGE ($)
JAN	8977	8977	207.7	207.7	5386	0	0	0	0	0	0	0.6000	5386
FEB	6426	6426	128.6	128.6	3855	0	0	0	0	0	0	0.6000	3855
MAR	2316	2316	74.5	74.5	1390	0	0	0	0	0	0	0.6000	1390
APR	807	807	72.1	72.1	484	0	0	0	0	0	0	0.6000	484
MAY	651	651	72.1	72.1	391	0	0	0	0	0	0	0.6000	391
JUN	3411	3411	72.0	72.0	2047	0	0	0	0	0	0	0.6000	2047
JUL	9753	9753	71.9	71.9	5852	0	0	0	0	0	0	0.6000	5852
AUG	6999	6999	71.9	71.9	4199	0	0	0	0	0	0	0.6000	4199
SEP	1478	1478	71.9	71.9	887	0	0	0	0	0	0	0.6000	887
OCT	210	210	1.9	1.9	126	0	0	0	0	0	0	0.6000	126
NOV	417	417	75.1	75.1	250	0	0	0	0	0	0	0.6000	250
DEC	2292	2292	109.6	109.6	1375	0	0	0	0	0	0	0.6000	1375
TOTAL	43738	43738	207.7		26243	0	0	0	0	0		0.6000	26243

Medical Building

Plan and section of medical building with solar-heated atria. The overhangs allow penetration of direct solar into the atria only in the winter.

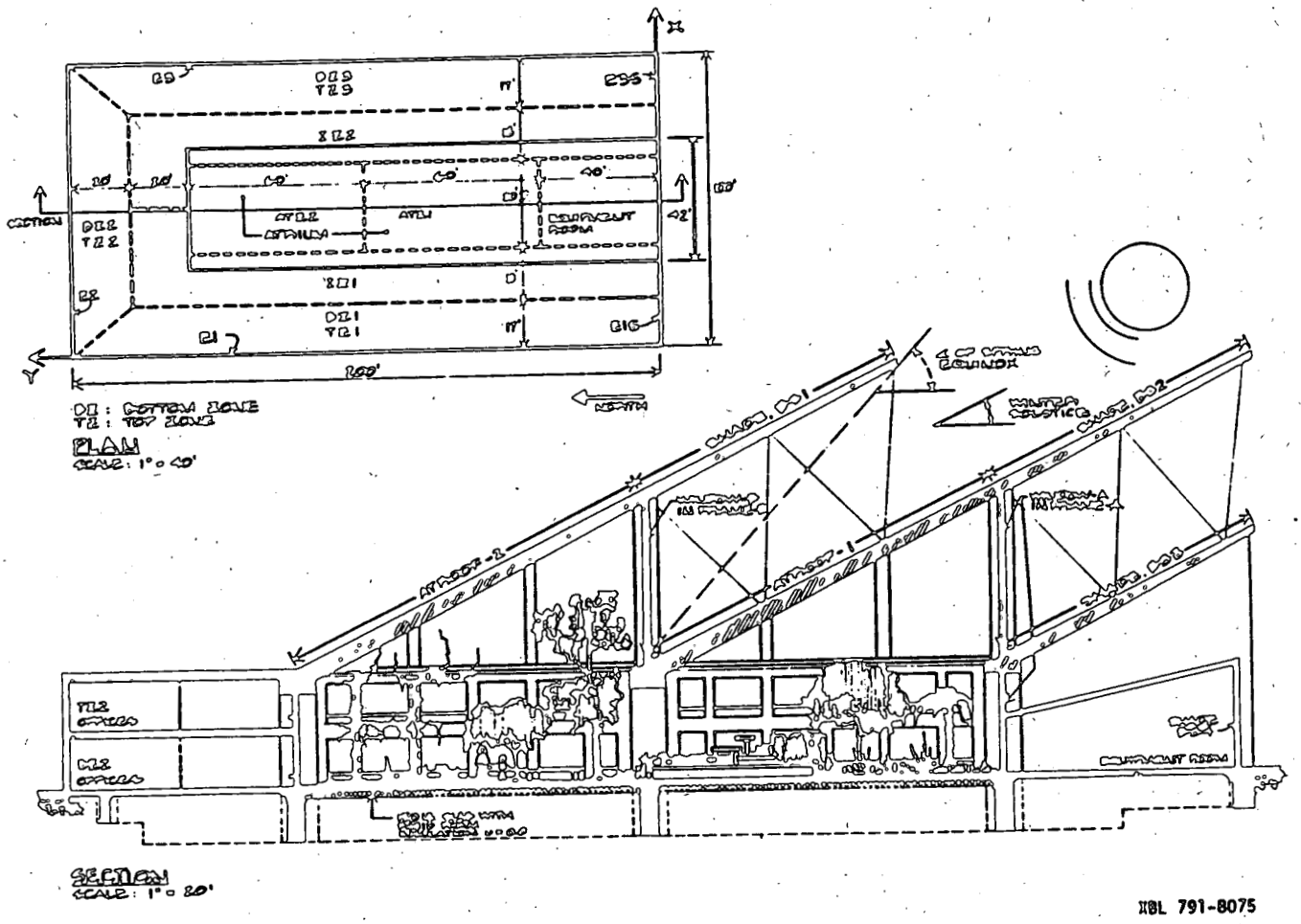

HBL 791-8075

Medical Building

DrawBDL axonometric wire frame view of surfaces as input into BDL. The triangular exterior walls of the atria are input as rectangles of equivalent area.

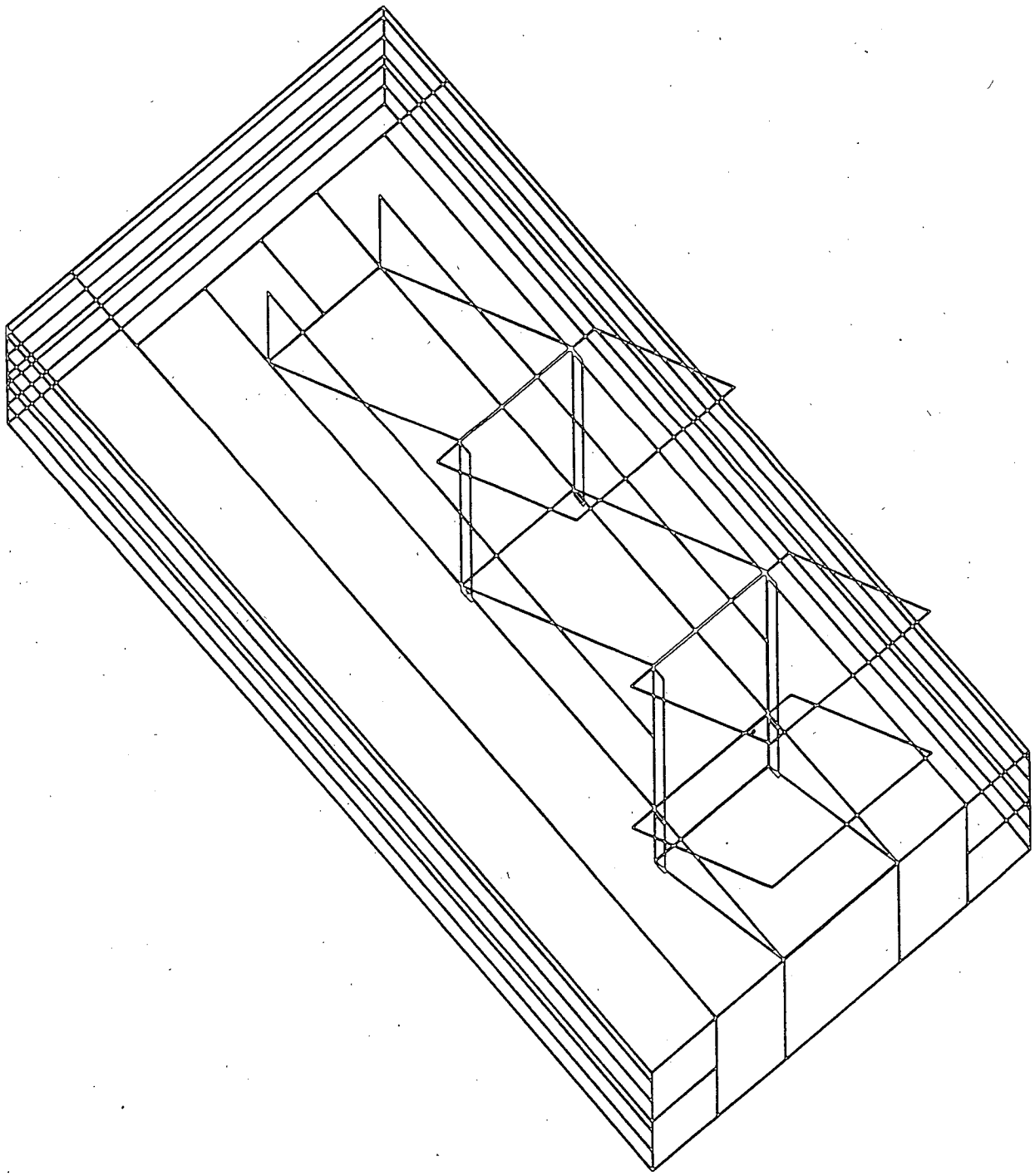

791-8075A

L D L P R O C E S S O R I N P U T D A T A

Wed Nov 10 15:17:48 1993LDL RUN 1

```
*   2 * TITLE LINE-1 * MEDICAL OFFICE BUILDING, CHICAGO*
*   3 *       LINE-2 * WATER LOOP HEAT PUMP WITH STORAGE *
*   4 *       LINE-3 * SAMP3.INP  RUN 1  *  ..
*   5 *
*   6 *                ABORT                ERRORS   ..
*   7 *                DIAGNOSTIC           WARNINGS    ..
*   8 *                RUN-PERIOD           JAN 1 1988  THRU  DEC 31 1988  ..
*   9 *                BUILDING-LOCATION    LATITUDE=42  LONGITUDE=88
*  10 *                                     TIME-ZONE=6  ALTITUDE=610 ..
*  11 *
*  12 *                LOADS-REPORT         SUMMARY=(LS-B,LS-C,LS-D) ..
*  13 *
*  14 *                     $ BUILDING DESCRIPTION
*  15 *
*  16 * $ STRUCTURE   REINFORCED CONCRETE CONSTRUCTION WITH 4IN CONCRETE FLOORS AND ROOF
*  17 * $             10FT FLOOR TO FLOOR HEIGHT, TWO STORIES HIGH.  RETURN AIR PLENUMS
*  18 * $             ARE NOT DEFINED.
*  19 *
*  20 * $ WALLS       USING CODE WORDS FROM THE DOE-2 LIBRARY (REFERENCE MANUAL PART 2)
*  21 * $             AND STARTING WITH THE OUTSIDE SURFACE AND MOVING INWARD:
*  22 * $                2IN PRECAST CONCRETE PANEL (CC03); 2IN POLYSTRENE INSULATION
*  23 * $                R-8 (IN35); 3IN AIRSPACE (AL21); 5/8IN GYPSUM BOARD (GP04);
*  24 * $                3/4IN FINISH PLASTER.
*  25 *
*  26 * $ ATRIUM ROOF BUILT-UP ROOFING (BR01); 3IN ROOF INSULATION R-8 (IN76);
*  27 * $             6IN CONCRETE (CC04); INSIDE FILM RESISTANCE .76
*  28 *
*  29 * $ OFFICE ROOF BUILT-UP ROOFING (BR01); 3IN ROOF INSULATION R-8 (IN76);
*  30 * $             2 FT AIR SPACE (AL33); 3/4IN LAY-IN ACCOUSTIC TILE (AC03);
*  31 * $             INSIDE-FILM-RESISTANCE .76.
*  32 *
*  33 * $ FLOORS      FIRST FL IS SLAB-ON-GRADE EFFECTIVE U-VALUE OF ENTIRE AREA .05.
*  34 *
*  35 * $ WINDOWS     OFFICE AREA 4FT HIGH AND FULL WIDTH OF EACH WALL, EXCEPT SOUTH
*  36 * $             WALL WHERE THERE ARE NO WINDOWS.  GLASS IS DOUBLE PANE TINTED
*  37 * $             WITH A SOLAR TRANSMITTANCE OF .53. WINDOWS HAVE INSIDE DRAPES
*  38 * $             THAT HAVE A PROBABILITY OF.7 OF BEING PULLED WHEN TRANSMITTED
*  39 * $             DIRECT RADIATION IS GREATER THAN 40 BTUH.  DRAPES ARE THEN REOPEN-
*  40 * $             ED WITH A PROBABILITY OF .2 WHENEVER SOLAR DROPS BELOW 40BTUH.
*  41 * $             ATRIUM GLASS IS THE SAME AS OFFICE GLASS EXCEPT THAT IT DOES NOT
*  42 * $             HAVE DRAPES.  THERE ARE TWO MAIN SECTIONS OF GLASS 29' WIDE BY
*  43 * $             30' HIGH WITH OVERHANGS AND SIDE FINS.  NOTICE THAT THE SKETCH
*  44 * $             OF THE BUILDING INDICATES A LARGE OVERHANG WHICH WOULD BE VERY
*  45 * $             DIFFICULT TO BUILD.  THIS WAS THE WAY IT WAS SIMULATED AS THIS
*  46 * $             METHOD IS EQUIVALENT TO MULTIPLE SURFACES THAT PROVIDE THE SAME
*  47 * $             SHADING GEOMETRY.
*  48 *
*  49 * $ INTERIORS   CEILINGS ARE SIMULATED AS PART OF THE ROOF STRUCTURE ON THE TOP
*  50 * $             FLOOR.  PARTITIONS SIMULATE A GLASS WALL BETWEEN ATRIUM AND
*  51 * $             OFFICE SPACES, BUT WALLS BETWEEN INTERIOR AND EXTERIOR OFFICES
*  52 * $             ARE NOT DEFINED.  WALLS BETWEEN THE EQUIPMENT ROOM AND OFFICES
*  53 * $             HAVE A U-VALUE OF .28.
*  54 *
*  55 * $ SPACE LOADS LIGHTING IS RECESSED FLUORSCENT NON VENTED AT 1.5 WATTS/SQFT IN
*  56 * $             THE OFFICES AND 1 WATT/SQFT IN THE ATRIUM.
*  57 * $             PEOPLE IN OFFICES IS CALCULATED BY DOE-2 AT 150SQFT/PERSON.
*  58 * $             INFILTRATION IS SET AT .2 AIRCHANGES/HR WHEN FANS ARE OFF AND AT
```

```
* 59 * $              .1 AIRCHANGE WHEN FANS ARE ON.
* 60 * $              EQUIPMENT IN OFFICES IS SET AT 1 WATTS/SQFT
* 61 *
* 62 *                      $ CONSTRUCTIONS
* 63 *
* 64 *
* 65 * ROOF-O         =LAYERS              MAT=(BR01,IN76,CC03,AL33,AC03)  I-F-R=.76 ..
* 66 * ROOF-A         =LAYERS              MAT=(BR01,IN76,CC04)  I-F-R .76  ..
* 67 * OFF-ROF       =CONSTRUCTION        LAYERS ROOF-O  ..
* 68 * ATR-ROF       =CONSTRUCTION        LAYERS ROOF-A  ..
* 69 * WALL-1        =LAYERS              MAT=(CC33,IN35,AL21,GP04,GP04)  ..
* 70 * WL1           =CONSTRUCTION        LAYERS=WALL-1  ..
* 71 * BW1           =CONSTRUCTION        U=.05 ..
* 72 * BW2           =CONSTRUCTION        U=.0001   ..
* 73 * WL2           =CONSTRUCTION        U=1.05   $ ATRIUM GLASS PARTITIONS $  ..
* 74 * WL3           =CONSTRUCTION        U=.28    $ INTERIOR PARTITIONS $  ..
* 75 *
* 76 *                     $ GLASS DESCRIPTION
* 77 *
* 78 * GT1           =GLASS-TYPE   GLASS-TYPE-CODE 5  PANES 2  ..
* 79 * GT2           =GLASS-TYPE   G-T-C 5  PANES 2  ..
* 80 *
* 81 *                     $ SCHEDULES
* 82 *
* 83 * OC1           =DAY-SCHEDULE        (1,9) (0)  (10,12) (1)  (13,14) (.8,.4)
* 84 *                                    (15,18) (.7)  (19,21) (.4)  (22,24) (.2)  ..
* 85 * OC2           =DAY-SCHEDULE        (1,24) (.2)  ..
* 86 * OCCUPANCY     =WEEK-SCHEDULE       (MON,TUE) OC1       (WED) OC2
* 87 *                                    (THU,SAT) OC1       (SUN,HOL) OC2  ..
* 88 * OCCUP         =SCHEDULE            THRU DEC 31 OCCUPANCY  ..
* 89 *
* 90 * L1            =DAY-SCHEDULE        (1,6) (.2)  (7,12) (.9)  (13,14) (.8,.4)
* 91 *                                    (15,18) (.7)  (19,21) (.4)  (22,24) (.2)  ..
* 92 * L2            =DAY-SCHEDULE        (1,24) (.2)  ..
* 93 * LIGHTS        =WEEK-SCHEDULE       (MON,TUE) L1        (WED) L2
* 94 *                                    (THU,SAT) L1        (SUN,HOL) L2 ..
* 95 * LT1           =SCHEDULE            THRU DEC 31 LIGHTS  ..
* 96 *
* 97 * ES1           =DAY-SCHEDULE        (1,9) (0)  (10,21) (.9)  (22,24) (.4)  ..
* 98 * ES2           =DAY-SCHEDULE        (1,9) (0)  (10,24) (.4)  ..
* 99 * EQUIPMENT     =WEEK-SCHEDULE       (MON,TUE) ES1       (WED) ES2
* 100 *                                   (THU,SAT) ES1       (SUN,HOL) ES2   ..
* 101 * EQ1          =SCHEDULE            THRU DEC 31 EQUIPMENT  ..
* 102 *
* 103 * I1           =DAY-SCHEDULE        (1,9) (1)  (10,21) (.5)  (22,24) (1)  ..
* 104 * INFILTRAT    =WEEK-SCHEDULE       (ALL) I1   ..
* 105 * INF1         =SCHEDULE            THRU DEC 31 INFILTRAT   ..
* 106 *
* 107 * SHADE-MULT   =SCHEDULE            THRU DEC 31 (ALL) (1,24) (.6)  ..
* 108 * COND-MULT    =SCHEDULE            THRU DEC 31 (ALL) (1,24) (.90)  ..
* 109 * CLOSE-SHADE  =SCHEDULE            THRU DEC 31 (ALL) (1,24) (40)  ..
* 110 * REOPEN-PROB  =SCHEDULE            THRU DEC 31 (ALL) (1,24) (.2)  ..
* 111 *
* 112 *                     $ BUILDING SHADE BY ANOTHER BUILDING
* 113 *
* 114 * $ FOR PURPOSE OF DEMONSTRATION ASSUME THAT THERE IS ANOTHER BUILDING IN
* 115 * $ ALIGNMENT WITH THE MEDICAL BLDG BUT 150FT TO THE WEST.  IT IS 170FT TALL
* 116 * $ AND 110FT WIDE.  THE INPUT TO REPRESENT THIS AS A SHADING SURFACE IS:
* 117 *
* 118 * BUILDING-SHADE    H=170  W=110  AZ=90  TILT=90  X=-150  ..
* 119 *
* 120 *                    $ SET DEFAULTS
* 121 *
* 122 *          SET-DEFAULT FOR  EXTERIOR-WALL  HEIGHT=10  AZIMUTH=180
* 123 *                                          CONSTRUCTION=WL1  ..
```

```
* 124 *          SET-DEFAULT FOR  WINDOW  HEIGHT=4  Y=4  GLASS-TYPE=GT1
* 125 *                           MAX-SOLAR-SCH=CLOSE-SHADE   SUN-CTRL-PROB .7
* 126 *                           WIN-SHADE-TYPE=MOVABLE-INTERIOR
* 127 *                           SHADING-SCHEDULE=SHADE-MULT
* 128 *                           CONDUCT-SCHEDULE=COND-MULT
* 129 *                           OPEN-SHADE-SCH=REOPEN-PROB  ..
* 130 *
* 131 *                  $ SPACE DESCRIPTION
* 132 *
* 133 * OFFICE        =SPACE-CONDITIONS    TEMPERATURE=(74)  FLOOR-WEIGHT=70
* 134 *                                    EQUIPMENT-W/SQFT=1  EQUIP-SCHEDULE=EQ1
* 135 *                                    LIGHTING-W/SQFT=1.5  LIGHTING-SCHEDULE=LT1
* 136 *                                    INF-METHOD=AIR-CHANGE  AIR-CHANGES/HR=.2
* 137 *                                    LIGHTING-TYPE=SUS-FLUOR
* 138 *                                    PEOPLE-HG-LAT=200  PEOPLE-HG-SENS=250
* 139 *                                    PEOPLE-SCHEDULE=OCCUP  AREA/PERSON=150 ..
* 140 *
* 141 * ATRIUM        =SPACE-CONDITIONS    TEMPERATURE=(74)  FLOOR-WEIGHT=100
* 142 *                                    LIGHTING-SCHEDULE=LT1
* 143 *                                    LIGHTING-TYPE=INCAND
* 144 *                                    LIGHTING-W/SQFT=1
* 145 *                                    INF-SCHEDULE=INF1  AIR-CHANGES/HR=.2
* 146 *                                    INF-METHOD=AIR-CHANGE  ..
* 147 *
* 148 * BZ1           =SPACE               S-C=OFFICE  AREA=3230  VOLUME=29070
* 149 *                                    AZ=90  Y=200  ..
* 150 *
* 151 * E1            =EXTERIOR-WALL       WIDTH=200  ..
* 152 * W1            =WINDOW              WIDTH=200  ..
* 153 *
* 154 * E1S           =EXTERIOR-WALL       W=17  AZ=90  X=200  ..
* 155 *
* 156 *                UNDERGROUND-FLOOR   AREA=3230  CONS=BW1  ..
* 157 *
* 158 * BZ2           =SPACE               S-C=OFFICE  AREA=1660 VOLUME=14940
* 159 *                                    AZ=180  X=100  Y=200  ..
* 160 *
* 161 * E2            =EXTERIOR-WALL       WIDTH=100  ..
* 162 * W2            =WINDOW              WIDTH=100  ..
* 163 *
* 164 *                UNDERGROUND-FLOOR   AREA=1660  CONS=BW1  ..
* 165 *
* 166 * BZ3           =SPACE               LIKE BZ1  AZ=-90  X=100  Y=0  ..
* 167 *
* 168 * E3            =EXTERIOR-WALL       LIKE E1  ..
* 169 * W3            =WINDOW              LIKE W1  ..
* 170 *
* 171 * E3S           =EXTERIOR-WALL       W=17  AZ=270  Y=17  ..
* 172 *
* 173 *                UNDERGROUND-FLOOR   AREA=3230  CONS=BW1  ..
* 174 *
* 175 * TZ1           =SPACE               LIKE BZ1  Z=10  ..
* 176 *
* 177 * R1            =ROOF                H=17  W=200  AZ=180  TILT=0  Z=10
* 178 *                                    CONS=OFF-ROF  ..
* 179 *
* 180 *                EXTERIOR-WALL       LIKE E1  ..
* 181 *                WINDOW              LIKE W1  ..
* 182 *
* 183 *                EXTERIOR-WALL       LIKE E1S  ..
* 184 *
* 185 * TZ2           =SPACE               LIKE BZ2  Z=10  ..
* 186 *
* 187 *                ROOF                LIKE R1  H=20  W=83  ..
* 188 *
```

```
* 189 *                EXTERIOR-WALL       LIKE E2  ..
* 190 *                WINDOW              LIKE W2  ..
* 191 *
* 192 *
* 193 * TZ3           =SPACE               LIKE BZ3  Z=10  ..
* 194 *                ROOF                LIKE R1  H=17  W=180  ..
* 195 *                EXTERIOR-WALL       LIKE E3  ..
* 196 *                WINDOW              LIKE W3  ..
* 197 *                EXTERIOR-WALL       LIKE E3S  ..
* 198 *
* 199 * IZ1           =SPACE               S-C=OFFICE  AREA=3540 VOLUME=70800
* 200 *                                    AZ=90  X=17  Y=180  ..
* 201 *
* 202 * IN1           =INTERIOR-WALL       AREA=1200  NEXT-TO ATZ1  CONS=WL2  ..
* 203 * IN2           =INTERIOR-WALL       AREA=1200  NEXT-TO ATZ2  CONS=WL2 ..
* 204 * IN3           =INTERIOR-WALL       AREA=586  NEXT-TO EQUIP-RM  CONS=WL3 ..
* 205 *                ROOF                LIKE R1  H=18  W=180  Z=20  ..
* 206 *                ROOF                LIKE R1  H=15  W=20  Y=18  Z=20  ..
* 207 *                EXTERIOR-WALL       H=20  W=18  AZ=90  X=180  ..
* 208 *                UNDERGROUND-FLOOR   AREA=3540  CONS=BW1   ..
* 209 *
* 210 * IZ2           =SPACE               LIKE IZ1  AZ=-90  X=83  Y=0  ..
* 211 *
* 212 *                INTERIOR-WALL       LIKE IN1  NEXT-TO ATZ1  ..
* 213 *                INTERIOR-WALL       LIKE IN2  NEXT-TO ATZ2  ..
* 214 *                INTERIOR-WALL       LIKE IN3  ..
* 215 *                EXTERIOR-WALL       H=20  W=18  AZ=270  Y=18  ..
* 216 *                ROOF                LIKE R1  H=18  W=180  Z=20  ..
* 217 *                ROOF                LIKE R1  H=15  W=20  X=160  Y=18  Z=20  ..
* 218 *                UNDERGROUND-FLOOR   AREA=3540  CONS=BW1  ..
* 219 *
* 220 * ATZ1          =SPACE               S-C=ATRIUM  AREA=1800  VOLUME=16200
* 221 *                                    X=35  Y=40
* 222 *                                    SOURCE-TYPE = HOT-WATER
* 223 *                                    SOURCE-BTU/HR = 30000
* 224 *                                    SOURCE-SENSIBLE = 0.0
* 225 *                                    SOURCE-SCHEDULE = OCCUP  ..
* 226 *
* 227 * ATROOF-1      =ROOF                HEIGHT=66.6  WIDTH=30
* 228 *                                    AZIMUTH=0  TILT=26  X=30  Y=60  Z=20
* 229 *                                    CONS=ATR-ROF  ..
* 230 * E4            =EXTERIOR-WALL       H=14.5  W=60  AZ=270  Y=60  Z=20  ..
* 231 * E5            =EXTERIOR-WALL       LIKE E4  AZ=90  X=30  Y=0  ..
* 232 * F1            =UNDERGROUND-FLOOR   AREA=1800  CONS=BW2  ..
* 233 * FRAME-A       =EXTERIOR-WALL       HEIGHT=29  WIDTH=30  Z=20  ..
* 234 * WINDOW-A      =WINDOW              H=28.9  W=29.9  X=.05  Y=.05  GLASS-TYPE=GT2
* 235 *                                    OVERHANG-A=6  OH-B=0  OH-D=48.5  OH-W=42
* 236 *                                    OVERHANG-ANGLE=116  LEFT-FIN-A=0  L-F-B=0
* 237 *                                    L-F-H=30  L-F-D=3  RIGHT-FIN-A=0  R-F-B=0
* 238 *                                    R-F-H=30  R-F-D=3  ..
* 239 *                EXTERIOR-WALL       LIKE FRAME-A  HEIGHT=10.7  W=30  Z=9.3 ..
* 240 *                WINDOW              LIKE WINDOW-A  H=10.6  W=29.9  L-F-H=10.7
* 241 *                                                   R-F-H=10.7  ..
* 242 *
* 243 * ATZ2          =SPACE               LIKE ATZ1   SOURCE-BTU/HR=0.0  Y=100  ..
* 244 *
* 245 * ATROOF-2      =ROOF                LIKE ATROOF-1  ..
* 246 *                EXTERIOR-WALL       LIKE E4  ..
* 247 *                EXTERIOR-WALL       LIKE E5  ..
* 248 *                UNDERGROUND-FLOOR   LIKE F1  ..
* 249 * FRAME-B       =EXTERIOR-WALL       LIKE FRAME-A  ..
* 250 * WINDOW-B      =WINDOW              LIKE WINDOW-A  ..
* 251 *
* 252 * EQUIP-RM      =SPACE               ZONE-TYPE=UNCONDITIONED
* 253 *                                    AREA=1200  VOLUME=17580  X=35  ..
```

```
* 254 *
* 255 *                EXTERIOR-WALL       HEIGHT=20  WIDTH=30  ..
* 256 *
* 257 *                ROOF                H=41.2  W=30  CONS=OFF-ROF
* 258 *                                    TILT=15  Z=9.3  X=30  Y=40  AZIMUTH=0 ..
* 259 *
* 260 *                INTERIOR-WALL       AREA=279  CONS=WL3  NEXT-TO ATZ1 ..
* 261 *                UNDERGROUND-FLOOR   AREA=1200  CONS=BW1  ..
* 262 *
* 263 * END  ..
* 264 * COMPUTE LOADS  ..
* 265 * INPUT SYSTEMS  ..
```

```
* 266 * SYSTEMS-REPORT  SUMMARY (SS-A,SS-C,SS-J,SS-D)  ..
* 267 *
* 268 *                 $ HVAC SYSTEMS DESCRIPTION
* 269 *
* 270 *
* 271 * $ DESIGN TEMPS  ATRIUM  COOLING 80F-SUMMER, 70F-WINTER   HEATING 65F
* 272 * $               OFFICE  COOLING 76F   HEATING 74F
* 273 * $ SYSTEM TYPE   THE ENTIRE BUILDING IS SERVED BY A WATER LOOP HEAT PUMP (HP)
* 274 * $               SYSTEM.  THE ATRIUM UNITS HAVE AN OUTSIDE AIR ECONOMIZER AND
* 275 * $               PROVIDE MINIMUM VENTILATION AIR FOR ALL SPACES TO GIVE .25 AIR-
* 276 * $               CHANGES/HOUR FOR THE ENTIRE BUILDING.  IT IS ASSUMED THAT THE
* 277 * $               OFFICE UNITS PULL THEIR OUTSIDE AIR FROM THE ATRIUM. THE
* 278 * $               PERIMETER HP UNITS ARE FURNISHED WITH A WATER SIDE ECONOMIZER.
* 279 * $               THE MINIMUM OUTSIDE AIR DAMPERS TO THE ATRIUM UNITS ARE HELD
* 280 * $               CLOSED BETWEEN 9PM WHEN FANS ARE TURNED OFF UNTIL 9AM AT NORMAL
* 281 * $               START. THE FANS OPERATE FROM 9AM TO 9PM MONDAY THRU SATURDAY,
* 282 * $               AND ARE OFF ON SUNDAYS AND HOLIDAYS.  THE FANS ARE ALLOWED TO
* 283 * $               START AS EARLY AS 7AM TO PICK UP HEATING AND COOLING LOADS,
* 284 * $               BUT ARE DELAYED AS LONG AS POSSIBLE.  THE NIGHT SETBACK
* 285 * $               TEMPERATURE IS 65F AND THE NIGHT SETUP TEMPERATURE IS 90F.
* 286 * $               THE TEMPERATURE OF THE HP WATER LOOP IS MAINTAINED BETWEEN 55F
* 287 * $               (BOILER SET POINT OF 60F) AND 90F (TOWER SETPOINT OF 85F),
* 288 * $               BUT THE TOWER SETPOINT IS ALLOWED TO FLOAT TO LOWER
* 289 * $               TEMPERATURES BASED UPON OUTDOOR WETBULB TEMPERATURE TO
* 290 * $               IMPROVE THE EFFICIENCY OF THE HP UNITS.  TOTAL SYSTEM VOLUME
* 291 * $               INCLUDING A 7500 GALLON STORAGE TANK IS 10000 GALLONS.
* 292 *
* 293 *
* 294 * $               FROM MAY 15 THRU OCT 15 A SEPARATE NIGHT VENTILATION SYSTEM
* 295 * $               CAN CYCLE ON TO PROVIDE FREE OA COOLING OF THE ATRIUM, BUT ONLY
* 296 * $               IF ITS SPACE TEMPERATURE IS ABOVE 76F.  THE AIR SIDE CAPACITY
* 297 * $               OF THE NIGHT VENTILATION SYSTEM IS TWICE AS LARGE AS THE HP
* 298 * $               UNITS.
* 299 *
* 300 * $               A SERVICE WATER HEAT PUMP IS LOCATED IN ATRIUM ATZ1. IT
* 301 * $               SUPPLEMENTS THE DOMESTIC HOT WATER HEATER IN PLANT. THE
* 302 * $               CAPACITY OF THE HEAT PUMP IS 24000 BTH/HR.
* 303 *
* 304 *                     $ SCHEDULES
* 305 *
* 306 * DAYS          = WEEK-SCHEDULE (MON,SAT) (1,7)(0)(8,9)(-999)(10,21)(1)(22,24)(0)
* 307 *                                (SUN,HOL) (1,24)(0)  ..
* 308 * AHU-SCHED     = SCHEDULE      THRU DEC 31 DAYS  ..
* 309 *
* 310 *                         $ ATRIUM COOLING SCHEDULE
* 311 *
* 312 * AT-C-WIN-HRS  = DAY-SCHEDULE  (1,24) (70)  ..
* 313 * AT-C-SUM-HRS  = DAY-SCHEDULE  (1,24) (80)  ..
* 314 * AT-C-WIN-DAYS = WEEK-SCHEDULE (ALL) AT-C-WIN-HRS  ..
* 315 * AT-C-SUM-DAYS = WEEK-SCHEDULE (ALL) AT-C-SUM-HRS  ..
* 316 * TCOOL1        = SCHEDULE      THRU MAR 31 AT-C-WIN-DAYS
* 317 *                               THRU OCT 31 AT-C-SUM-DAYS
* 318 *                               THRU DEC 31 AT-C-WIN-DAYS  ..
* 319 *
* 320 *                         $ ATRIUM HEATING SCHEDULE
* 321 *
* 322 * AT-HEAT-HRS   = DAY-SCHEDULE  (1,24) (65)  ..
```

```
* 323 * THEAT1        = SCHEDULE THRU DEC 31 (ALL) AT-HEAT-HRS  ..
* 324 *
* 325 *                          $ OFFICE COOLING SCHEDULE
* 326 *
* 327 * OFF-1         = DAY-SCHEDULE  (1,9)(90) (10,21)(76) (22,24)(90)  ..
* 328 * OFF-2         = DAY-SCHEDULE  (1,24) (90)  ..
* 329 * TCOOL2        = SCHEDULE      THRU DEC 31 (MON,SAT) OFF-1  (SUN,HOL) OFF-2  ..
* 330 *
* 331 *                          $ OFFICE HEATING SCHEDULE
* 332 *
* 333 * OFF-3         = DAY-SCHEDULE  (1,9)(65) (10,21)(74) (22,24)(65) ..
* 334 * OFF-4         = DAY-SCHEDULE  (1,24)(65)   ..
* 335 * THEAT2        = SCHEDULE      THRU DEC 31 (MON,SAT) OFF-3 (SUN,HOL) OFF-4  ..
* 336 *
* 337 *                         $ NIGHT VENTILATION SCHEDULES
* 338 *
* 339 * VENT-T        = SCHEDULE  THRU DEC 31 (ALL) (1,24) (76)  ..
* 340 * VENT-ON-OFF   = SCHEDULE  THRU MAY 15 (ALL) (1,24) (0)
* 341 *                           THRU OCT 15 (ALL) (1,24) (1)
* 342 *                           THRU DEC 31 (ALL) (1,24) (0)  ..
* 343 *
* 344 * MIN-OA        = SCHEDULE  THRU DEC 31 (ALL) (1,9)(0) (10,21)(-999) (22,24)(0) ..
* 345 *
* 346 *                          $ ZONE DESCRIPTION
* 347 *
* 348 * ENV-ATR       = ZONE-CONTROL  D-H-T 70  D-C-T 74  H-T-SCH THEAT1  C-T-SCH TCOOL1
* 349 *                               T-TYPE PROPORTIONAL  ..
* 350 * ENV-OFF       = ZONE-CONTROL  D-H-T 74  D-C-T 74  H-T-SCH THEAT2  C-T-SCH TCOOL2
* 351 *                               T-TYPE PROPORTIONAL  ..
* 352 * ATZ1          = ZONE          Z-C ENV-ATR  OUTSIDE-AIR-CFM 1665 ..
* 353 * ATZ2          = ZONE          LIKE ATZ1  ..
* 354 * EQUIP-RM      = ZONE          ZONE-TYPE=UNCONDITIONED ..
* 355 * BZ1           = ZONE          Z-C ENV-OFF ZONE-REPORTS = NO ..
* 356 * BZ2           = ZONE  LIKE BZ1  ..
* 357 * BZ3           = ZONE  LIKE BZ1  ..
* 358 * TZ1           = ZONE  LIKE BZ1  ..
* 359 * TZ2           = ZONE  LIKE BZ1  ..
* 360 * TZ3           = ZONE  LIKE BZ1  ..
* 361 * IZ1           = ZONE  LIKE BZ1  ..
* 362 * IZ2           = ZONE  LIKE BZ1  ..
* 363 *
* 364 * HP-SYS-CORE   = SYSTEM        SYSTEM-TYPE=HP  MAX-S-T=100  MIN-S-T=55
* 365 *                               SUPPLY-STATIC=2.5  SUPPLY-EFF=.45
* 366 *                               OA-CONTROL = TEMP   ECONO-LIMIT-T = 68
* 367 *                               FAN-SCHEDULE=AHU-SCHED
* 368 *                               FLUID-VOLUME = 30
* 369 *                               MIN-AIR-SCH  = MIN-OA
* 370 *                               SHW-HP-SIZE=24000  SHW-HP-SOURCE=ZONE
* 371 *                               SHW-HP-ZONE=ATZ1
* 372 *                               ZONE-NAMES=(ATZ1,ATZ2,EQUIP-RM)
* 373 *                               SIZING-RATIO=1.5  ..
* 374 *
* 375 *
* 376 * HP-SYS-PERM   = SYSTEM        SYSTEM-TYPE = HP  MAX-S-T=100  MIN-S-T=55
* 377 *                               SUPPLY-STATIC=2.5 SUPPLY-EFF=.55
* 378 *                               FLUID-VOLUME=30
* 379 *                               FAN-SCHEDULE=AHU-SCHED
* 380 *                               ZONE-NAMES=(BZ1,BZ2,BZ3,TZ1,TZ2,
* 381 *                                           TZ3,IZ1,IZ2)  ..
* 382 *
* 383 * WLHP = PLANT-ASSIGNMENT
* 384 *        SYSTEM-NAMES     = (HP-SYS-CORE,HP-SYS-PERM)
* 385 *        HP-LOOP-HEATING = FROM-SYSTEMS
* 386 *        HP-LOOP-COOLING = FROM-SYSTEMS
* 387 *        BOILER-TYPE     = FUEL-BOILER
```

```
* 388 *        BOILER-SET-POINT= 60
* 389 *        TWR-SETPT-CTRL  = WETBULB-RESET
* 390 *        TWR-CAP-CTRL    = TWO-SPEED-FAN
* 391 *        MIN-TWR-WTR-T   = 61
* 392 *        TWR-DESIGN-WETBULB = 78
* 393 *        CIRC-PUMP-SCH   = AHU-SCHED
* 394 *        CIRC-PUMP-TYPE  = VARIABLE-FLOW
* 395 *        PLANT-REPORTS   = YES
* 396 *        DHW-SIZE        = 0
* 397 *        DHW-GAL/MIN     = .222
* 398 *        DHW-SCH         = OCCUP  ..
* 399 *
* 400 * TWR-FLOAT = SCHEDULE THRU MAY 15 (ALL) (1,24)(85)
* 401 *                     THRU OCT 15 (ALL) (1,24)(75)
* 402 *                     THRU DEC 31 (ALL) (1,24)(85)  ..
* 403 *
* 404 * OC1           =DAY-SCHEDULE        (1,9) (0)  (10,12) (1)  (13,14) (.8,.4)
* 405 *                                    (15,18) (.7)  (19,21) (.4)  (22,24) (.2)  ..
* 406 * OC2           =DAY-SCHEDULE        (1,24) (.2)  ..
* 407 * OCCUPANCY     =WEEK-SCHEDULE       (MON,TUE) OC1       (WED) OC2
* 408 *                                    (THU,SAT) OC1       (SUN,HOL) OC2  ..
* 409 * OCCUP         =SCHEDULE            THRU DEC 31 OCCUPANCY  ..
* 410 * END  ..
* 411 * COMPUTE SYSTEMS  ..
* 412 * INPUT PLANT  ..
```

P D L P R O C E S S O R I N P U T D A T A

Wed Nov 10 15:17:48 1993PDL RUN 1

```
* 413 * WLHP = PLANT-ASSIGNMENT  ..
* 414 * PLANT-REPORT  SUMMARY (PS-A,PS-D,BEPS)  ..
* 415 *
* 416 *                        $ PLANT DESCRIPTION
* 417 *
* 418 * DHW  = PLANT-EQUIPMENT  TYPE=DHW-HEATER  SIZE -999  I-N 1  ..
* 419 *
* 420 * END  ..
* 421 * COMPUTE PLANT  ..
* 422 * INPUT ECONOMICS  ..
```

E D L P R O C E S S O R I N P U T D A T A

Wed Nov 10 15:17:48 1993EDL RUN 1

```
* 423 * DIAGNOSTIC WARNINGS ..
* 424 * ECONOMICS-REPORT  SUMMARY (ES-D,ES-E)  ..
* 425 *
* 426 *                    $  ENERGY CHARGE DESCRIPTION
* 427 *
* 428 * $ THE ELECTRIC RATE IS TIME-OF-USE WITH SEPARATE SUMMER/WINTER MINIMUM
* 429 * $ DEMAND CHARGES. IN ADDITION IT HAS S/W DEMAND CHARGES THAT APPLY ONLY TO THE
* 430 * $ ON-PEAK HOURS.  THE TWO DEMANDS ARE ADDITIVE, APPLY TO THE HIGHEST PEAK, BUT
* 431 * $ ONLY THE ON-PEAK CARRIES A RATCHET OF 90%.  THE ENERGY CHARGES ARE
* 432 * $ DOLLARS/KWH FOR THREE PERIODS (I.E. ON-PEAK, INTERMEDIATE-PEAK, AND OFF-PEAK).
* 433 * $ THE FUEL FOR THE HOT WATER GENERATOR SIMULATED IN SYSTEMS PLUS THE DOMESTIC
* 434 * $ HOT-WATER HEATER IS NATURAL-GAS  ..
* 435 *
* 436 * ELEC-COST    = UTILITY-RATE  RESOURCE = ELECTRICITY
* 437 *                             MIN-MON-CHGS = (186)
* 438 *                             DEMAND-CHGS = (2.25,2.25,2.25,2.25, 2.58,
* 439 *                                            2.58,2.58,2.58,2.58,2.58,2.25)
* 440 *                             BLOCK-CHARGES = (SUM-P-DEM,WIN-P-DEM)
* 441 *                             ENERGY-CHG-SCH = TOU-SCH  ..
* 442 *
* 443 * TOU-SCH  = SCHEDULE  THRU APR 30 (WD) (1,8)(.0324)
* 444 *                                    (9,12)(.0354)
* 445 *                                    (13,18)(.0394)
* 446 *                                    (19,21)(.0354)
* 447 *                                    (22,24)(.0354)
* 448 *                                (WEH)(1,24)(.0354)
* 449 *                      THRU OCT 31 (WD) (1,8)(.0374)
* 450 *                                    (9,12)(.0394)
* 451 *                                    (13,18)(.0444)
* 452 *                                    (19,21)(.0394)
* 453 *                                    (22,24)(.0374)
* 454 *                                (WEH)(1,24)(.0374)
* 455 *                      THRU DEC 31 (WD) (1,8)(.0324)
* 456 *                                    (9,12)(.0354)
* 457 *                                    (13,18)(.0394)
* 458 *                                    (19,21)(.0354)
* 459 *                                    (22,24)(.0354)
* 460 *                                (WEH)(1,24)(.0354)  ..
* 461 *
* 462 * SUM-P-DEM = BLOCK-CHARGE  BLOCK-SCH = DEM-SCH
* 463 *                          SCH-FLAG  = 2
* 464 *                          BLOCK1-TYPE = DEMAND
* 465 *                          BLOCK1-DATA = (1,7.00)
* 466 *                          DEMAND-RATCHETS = (SUM-RATCH)  ..
* 467 *
* 468 * WIN-P-DEM = BLOCK-CHARGE  BLOCK-SCH = DEM-SCH
* 469 *                          SCH-FLAG  = 1
* 470 *                          BLOCK1-TYPE = DEMAND
* 471 *                          BLOCK1-DATA = (1,6.50)
* 472 *                          DEMAND-RATCHETS = (SUM-RATCH)  ..
* 473 *
* 474 * SUM-RATCH = RATCHET       NUM-MONTHS = 12
* 475 *                          RATCHET-SCH = DEM-SCH
* 476 *                          SCH-FLAG = 2
* 477 *                          TYPE    = HIGHEST-PEAK
* 478 *                          FRACTION = .90   ..
* 479 *
```

```
* 480 * DEM-SCH   = SCHEDULE   THRU APR 30  (WD) (1,12) (0)
* 481 *                                     (13,18)(1)
* 482 *                                     (19,24)(0)
* 483 *                                 (WEH) (1,24) (0)
* 484 *                        THRU OCT 31  (WD) (1,12) (0)
* 485 *                                     (13,18)(2)
* 486 *                                     (19,24)(0)
* 487 *                                 (WEH) (1,24) (0)
* 488 *                        THRU DEC 31  (WD) (1,12) (0)
* 489 *                                     (13,18)(1)
* 490 *                                     (19,24)(0)
* 491 *                                 (WEH) (1,24) (0)  ..
* 492 *
* 493 * GAS-COST  = UTILITY-RATE  RESOURCE = NATURAL-GAS
* 494 *                          ENERGY-CHG = .90  ..
* 495 * END  ..
* 496 * COMPUTE ECONOMICS  ..
* 497 *
* 498 * INPUT LOADS   ..
```

SPACE BZ1

MULTIPLIER 1.0 FLOOR MULTIPLIER 1.0

FLOOR AREA 3230 SQFT 300 M2
VOLUME 29070 CUFT 823 M3

	COOLING LOAD		HEATING LOAD	
TIME	AUG 19 4PM		JAN 1 9AM	
DRY-BULB TEMP	90F	32C	-2F	-19C
WET-BULB TEMP	71F	22C	-2F	-19C

	SENSIBLE (KBTU/H)	SENSIBLE (KW)	LATENT (KBTU/H)	LATENT (KW)	SENSIBLE (KBTU/H)	SENSIBLE (KW)
WALL CONDUCTION	2.424	0.710	0.000	0.000	-7.499	-2.197
ROOF CONDUCTION	0.000	0.000	0.000	0.000	0.000	0.000
WINDOW GLASS+FRM COND	15.607	4.573	0.000	0.000	-26.674	-7.815
WINDOW GLASS SOLAR	26.911	7.885	0.000	0.000	2.086	0.611
DOOR CONDUCTION	0.000	0.000	0.000	0.000	0.000	0.000
INTERNAL SURFACE COND	0.000	0.000	0.000	0.000	0.000	0.000
UNDERGROUND SURF COND	-1.292	-0.379	0.000	0.000	-5.491	-1.609
OCCUPANTS TO SPACE	3.372	0.988	3.015	0.883	1.077	0.315
LIGHT TO SPACE	10.866	3.184	0.000	0.000	3.307	0.969
EQUIPMENT TO SPACE	8.712	2.552	0.000	0.000	0.419	0.123
PROCESS TO SPACE	0.000	0.000	0.000	0.000	0.000	0.000
INFILTRATION	0.969	0.284	0.848	0.248	-5.251	-1.539
TOTAL	67.569	19.798	3.862	1.132	-38.026	-11.142
TOTAL LOAD	71.431 KBTU/H		20.929 KW		-38.026 KBTU/H	-11.142 KW
TOTAL LOAD / AREA	22.11BTU/H.SQFT		69.746 W / M2		11.773BTU/H.SQFT	37.129 W / M2

```
*****************************************************************
*                                                               *
*  NOTE  1)THE ABOVE LOADS EXCLUDE OUTSIDE VENTILATION AIR      *
*  ----     LOADS                                               *
*        2)TIMES GIVEN IN STANDARD TIME FOR THE LOCATION        *
*          IN CONSIDERATION                                     *
*                                                               *
*****************************************************************
```

SPACE TZ1

MULTIPLIER 1.0 FLOOR MULTIPLIER 1.0

FLOOR AREA 3230 SQFT 300 M2
VOLUME 29070 CUFT 823 M3

	COOLING LOAD		HEATING LOAD	
TIME	JUL 3 6PM		JAN 1 9AM	
DRY-BULB TEMP	92F	33C	-2F	-19C
WET-BULB TEMP	73F	23C	-2F	-19C

	SENSIBLE (KBTU/H)	SENSIBLE (KW)	LATENT (KBTU/H)	LATENT (KW)	SENSIBLE (KBTU/H)	SENSIBLE (KW)
WALL CONDUCTION	2.990	0.876	0.000	0.000	-7.515	-2.202
ROOF CONDUCTION	5.571	1.632	0.000	0.000	-18.754	-5.495
WINDOW GLASS+FRM COND	11.064	3.242	0.000	0.000	-27.174	-7.962
WINDOW GLASS SOLAR	27.912	8.178	0.000	0.000	2.092	0.613
DOOR CONDUCTION	0.000	0.000	0.000	0.000	0.000	0.000
INTERNAL SURFACE COND	0.000	0.000	0.000	0.000	0.000	0.000
UNDERGROUND SURF COND	0.000	0.000	0.000	0.000	0.000	0.000
OCCUPANTS TO SPACE	3.495	1.024	3.015	0.883	1.077	0.315
LIGHT TO SPACE	11.210	3.284	0.000	0.000	3.307	0.969
EQUIPMENT TO SPACE	9.094	2.664	0.000	0.000	0.419	0.123
PROCESS TO SPACE	0.000	0.000	0.000	0.000	0.000	0.000
INFILTRATION	2.840	0.832	3.056	0.895	-6.098	-1.787
TOTAL	74.176	21.734	6.070	1.779	-52.645	-15.425
TOTAL LOAD	80.246 KBTU/H		23.512 KW		-52.645 KBTU/H	-15.425 KW
TOTAL LOAD / AREA	24.84BTU/H.SQFT		78.354 W / M2		16.299BTU/H.SQFT	51.403 W / M2

```
*****************************************************************
*                                                               *
*  NOTE  1)THE ABOVE LOADS EXCLUDE OUTSIDE VENTILATION AIR      *
*  ----     LOADS                                               *
*        2)TIMES GIVEN IN STANDARD TIME FOR THE LOCATION        *
*          IN CONSIDERATION                                     *
*                                                               *
*****************************************************************
```

SPACE IZ1

MULTIPLIER 1.0 FLOOR MULTIPLIER 1.0

FLOOR AREA 3540 SQFT 329 M2
VOLUME 70800 CUFT 2005 M3

	COOLING LOAD		HEATING LOAD	
TIME	JUL 3 6PM		JAN 1 4AM	
DRY-BULB TEMP	92F	33C	3F	-16C
WET-BULB TEMP	73F	23C	2F	-17C

	SENSIBLE (KBTU/H)	SENSIBLE (KW)	LATENT (KBTU/H)	LATENT (KW)	SENSIBLE (KBTU/H)	SENSIBLE (KW)
WALL CONDUCTION	0.746	0.219	0.000	0.000	-1.797	-0.527
ROOF CONDUCTION	5.831	1.708	0.000	0.000	-19.304	-5.656
WINDOW GLASS+FRM COND	0.000	0.000	0.000	0.000	0.000	0.000
WINDOW GLASS SOLAR	0.000	0.000	0.000	0.000	0.000	0.000
DOOR CONDUCTION	0.000	0.000	0.000	0.000	0.000	0.000
INTERNAL SURFACE COND	-0.656	-0.192	0.000	0.000	-0.656	-0.192
UNDERGROUND SURF COND	-1.770	-0.519	0.000	0.000	-6.018	-1.763
OCCUPANTS TO SPACE	3.830	1.122	3.304	0.968	1.180	0.346
LIGHT TO SPACE	12.286	3.600	0.000	0.000	3.625	1.062
EQUIPMENT TO SPACE	9.966	2.920	0.000	0.000	0.922	0.270
PROCESS TO SPACE	0.000	0.000	0.000	0.000	0.000	0.000
INFILTRATION	6.988	2.047	7.519	2.203	-18.626	-5.458
TOTAL	37.221	10.906	10.823	3.171	-40.675	-11.918
TOTAL LOAD	48.044 KBTU/H		14.077 KW		-40.675 KBTU/H	-11.918 KW
TOTAL LOAD / AREA	13.57BTU/H.SQFT		42.803 W / M2		11.490BTU/H.SQFT	36.238 W / M2

```
*****************************************************************
*                                                               *
*  NOTE  1)THE ABOVE LOADS EXCLUDE OUTSIDE VENTILATION AIR      *
*  ----     LOADS                                               *
*        2)TIMES GIVEN IN STANDARD TIME FOR THE LOCATION        *
*          IN CONSIDERATION                                     *
*                                                               *
*****************************************************************
```

SPACE ATZ1

MULTIPLIER 1.0 FLOOR MULTIPLIER 1.0

FLOOR AREA 1800 SQFT 167 M2
VOLUME 16200 CUFT 459 M3

	COOLING LOAD		HEATING LOAD	
TIME	JUL 9 4PM		JAN 7 6AM	
DRY-BULB TEMP	94F	34C	1F	-17C
WET-BULB TEMP	74F	23C	1F	-17C

	SENSIBLE (KBTU/H)	SENSIBLE (KW)	LATENT (KBTU/H)	LATENT (KW)	SENSIBLE (KBTU/H)	SENSIBLE (KW)
WALL CONDUCTION	4.128	1.210	0.000	0.000	-9.090	-2.663
ROOF CONDUCTION	4.606	1.350	0.000	0.000	-12.357	-3.621
WINDOW GLASS+FRM COND	13.043	3.822	0.000	0.000	-36.905	-10.813
WINDOW GLASS SOLAR	16.651	4.879	0.000	0.000	2.622	0.768
DOOR CONDUCTION	0.000	0.000	0.000	0.000	0.000	0.000
INTERNAL SURFACE COND	-0.312	-0.092	0.000	0.000	-0.312	-0.092
UNDERGROUND SURF COND	-0.002	-0.001	0.000	0.000	-0.006	-0.002
OCCUPANTS TO SPACE	0.000	0.000	0.000	0.000	0.000	0.000
LIGHT TO SPACE	3.976	1.165	0.000	0.000	1.283	0.376
EQUIPMENT TO SPACE	0.000	0.000	0.000	0.000	0.000	0.000
PROCESS TO SPACE	0.000	0.000	0.000	0.000	0.000	0.000
INFILTRATION	0.338	0.099	0.351	0.103	-2.465	-0.722
TOTAL	42.429	12.432	0.351	0.103	-57.230	-16.768
TOTAL LOAD	42.780 KBTU/H		12.535 KW		-57.230 KBTU/H	-16.768 KW
TOTAL LOAD / AREA	23.77BTU/H.SQFT		74.956 W / M2		31.795BTU/H.SQFT	100.275 W / M2

```
*****************************************************************
*                                                               *
*  NOTE  1)THE ABOVE LOADS EXCLUDE OUTSIDE VENTILATION AIR      *
*  ----     LOADS                                               *
*        2)TIMES GIVEN IN STANDARD TIME FOR THE LOCATION        *
*          IN CONSIDERATION                                     *
*                                                               *
*****************************************************************
```

SPACE EQUIP-RM

MULTIPLIER 1.0 FLOOR MULTIPLIER 1.0

FLOOR AREA 1200 SQFT 111 M2
VOLUME 17580 CUFT 498 M3

	COOLING LOAD		HEATING LOAD	
TIME	JUL 9 6PM		JAN 2 8AM	
DRY-BULB TEMP	97F	36C	4F	-16C
WET-BULB TEMP	73F	23C	3F	-16C

	SENSIBLE (KBTU/H)	SENSIBLE (KW)	LATENT (KBTU/H)	LATENT (KW)	SENSIBLE (KBTU/H)	SENSIBLE (KW)
WALL CONDUCTION	1.781	0.522	0.000	0.000	-3.045	-0.892
ROOF CONDUCTION	2.737	0.802	0.000	0.000	-6.950	-2.036
WINDOW GLASS+FRM COND	0.000	0.000	0.000	0.000	0.000	0.000
WINDOW GLASS SOLAR	0.000	0.000	0.000	0.000	0.000	0.000
DOOR CONDUCTION	0.000	0.000	0.000	0.000	0.000	0.000
INTERNAL SURFACE COND	1.625	0.476	0.000	0.000	1.625	0.476
UNDERGROUND SURF COND	-0.360	-0.105	0.000	0.000	-1.800	-0.527
OCCUPANTS TO SPACE	0.000	0.000	0.000	0.000	0.000	0.000
LIGHT TO SPACE	0.000	0.000	0.000	0.000	0.000	0.000
EQUIPMENT TO SPACE	0.000	0.000	0.000	0.000	0.000	0.000
PROCESS TO SPACE	0.000	0.000	0.000	0.000	0.000	0.000
INFILTRATION	0.000	0.000	0.000	0.000	0.000	0.000
TOTAL	5.783	1.695	0.000	0.000	-10.170	-2.980
TOTAL LOAD	5.783 KBTU/H		1.695 KW		-10.170 KBTU/H	-2.980 KW
TOTAL LOAD / AREA	4.82BTU/H.SQFT		15.200 W / M2		8.475BTU/H.SQFT	26.729 W / M2

```
*****************************************************************
*                                                               *
*  NOTE  1)THE ABOVE LOADS EXCLUDE OUTSIDE VENTILATION AIR      *
*  ----    LOADS                                                *
*        2)TIMES GIVEN IN STANDARD TIME FOR THE LOCATION        *
*          IN CONSIDERATION                                     *
*                                                               *
*****************************************************************
```

*** BUILDING ***

FLOOR AREA	26920	SQFT	2501	SQMT
VOLUME	320160	CUFT	9067	CUMT

	COOLING LOAD		HEATING LOAD	
TIME	JUL 3 4PM		JAN 1 7AM	
DRY-BULB TEMP	92F	33C	-1F	-18C
WET-BULB TEMP	74F	23C	-1F	-18C

	SENSIBLE (KBTU/H)	SENSIBLE (KW)	LATENT (KBTU/H)	LATENT (KW)	SENSIBLE (KBTU/H)	SENSIBLE (KW)
WALL CONDUCTION	21.908	6.419	0.000	0.000	-58.361	-17.100
ROOF CONDUCTION	31.424	9.207	0.000	0.000	-112.720	-33.027
WINDOW GLASS+FRM COND	72.469	21.233	0.000	0.000	-200.304	-58.689
WINDOW GLASS SOLAR	135.439	39.684	0.000	0.000	23.828	6.982
DOOR CONDUCTION	0.000	0.000	0.000	0.000	0.000	0.000
INTERNAL SURFACE COND	-1.625	-0.476	0.000	0.000	-1.625	-0.476
UNDERGROUND SURF COND	-7.604	-2.228	0.000	0.000	-25.852	-7.575
OCCUPANTS TO SPACE	24.597	7.207	21.765	6.377	7.773	2.278
LIGHT TO SPACE	88.073	25.805	0.000	0.000	26.334	7.716
EQUIPMENT TO SPACE	63.735	18.674	0.000	0.000	4.000	1.172
PROCESS TO SPACE	0.000	0.000	0.000	0.000	0.000	0.000
INFILTRATION	23.936	7.013	30.411	8.910	-63.545	-18.619
TOTAL	452.353	132.539	52.176	15.288	-400.470	-117.338
TOTAL LOAD	504.529 KBTU/H		147.827 KW		-400.470 KBTU/H	-117.338 KW
TOTAL LOAD / AREA	18.74BTU/H.SQFT		59.108 W /SQMT		14.876BTU/H.SQFT	46.917 W /SQMT

```
*************************************************************
*                                                           *
*  NOTE  1)THE ABOVE LOADS EXCLUDE OUTSIDE VENTILATION AIR  *
*  ----      LOADS                                          *
*        2)TIMES GIVEN IN STANDARD TIME FOR THE LOCATION    *
*          IN CONSIDERATION                                 *
*                                                           *
*************************************************************
```

MEDICAL OFFICE BUILDING, CHICAGO WATER LOOP HEAT PUMP WITH STORAGE DOE-2.1E-001 Wed Nov 10 15:17:48 1993LDL RUN 1
SAMP3.INP RUN 1
REPORT- LS-D BUILDING MONTHLY LOADS SUMMARY WEATHER FILE- TRY CHICAGO

	COOLING						HEATING						ELEC	
MONTH	COOLING ENERGY (MBTU)	TIME OF MAX DY	TIME OF MAX HR	DRY-BULB TEMP	WET-BULB TEMP	MAXIMUM COOLING LOAD (KBTU/HR)	HEATING ENERGY (MBTU)	TIME OF MAX DY	TIME OF MAX HR	DRY-BULB TEMP	WET-BULB TEMP	MAXIMUM HEATING LOAD (KBTU/HR)	ELEC-TRICAL ENERGY (KWH)	MAXIMUM ELEC LOAD (KW)
JAN	3.86039	25	16	48.F	42.F	121.170	-121.579	1	7	-1.F	-1.F	-400.470	19174.	55.710
FEB	4.48149	16	15	43.F	36.F	97.163	-103.704	4	6	7.F	6.F	-372.809	17332.	55.710
MAR	14.83433	9	13	68.F	62.F	161.269	-69.737	24	6	8.F	7.F	-354.826	19607.	55.710
APR	50.48765	27	15	82.F	61.F	347.464	-27.861	8	5	33.F	30.F	-248.334	19282.	55.710
MAY	76.53624	20	15	77.F	68.F	352.785	-10.836	6	5	39.F	35.F	-145.577	19174.	55.710
JUN	118.25208	4	15	85.F	67.F	413.603	-1.292	25	5	52.F	47.F	-45.175	18849.	55.710
JUL	166.29558	3	15	92.F	74.F	452.353	-0.006	23	5	61.F	60.F	-1.509	19607.	55.710
AUG	143.22816	20	15	88.F	72.F	426.324	-0.103	5	5	55.F	54.F	-23.714	19607.	55.710
SEP	79.67437	11	15	86.F	72.F	377.639	-6.961	22	6	35.F	31.F	-118.785	18416.	55.710
OCT	42.50692	5	15	74.F	62.F	266.334	-22.933	21	5	30.F	29.F	-179.721	19174.	55.710
NOV	17.05823	2	15	75.F	61.F	273.918	-65.820	15	6	28.F	26.F	-287.580	18416.	55.710
DEC	3.27829	10	15	41.F	35.F	106.720	-108.653	9	6	14.F	13.F	-317.555	18741.	55.710
TOTAL	720.494						-539.484						227379.	
MAX						452.353						-400.470		55.710

MESSAGE LIST FROM SYSTEMS PROGRAM

WARNING********
IN HP-SYS-CORE OA-CONTROL HAS BEEN RESET TO FIXED TO ALLOW THE FAN CYCLING OPTION

REPORT- SV-A SYSTEM DESIGN PARAMETERS HP-SYS-CORE WEATHER FILE- TRY CHICAGO

SYSTEM NAME	SYSTEM TYPE	ALTITUDE MULTIPLIER	FLOOR AREA (SQFT)	MAX PEOPLE
HP-SYS-CORE	HP	1.020	4800.0	0.

SUPPLY FAN (CFM)	ELEC (KW)	DELTA-T (F)	RETURN FAN (CFM)	ELEC (KW)	DELTA-T (F)	OUTSIDE AIR RATIO	COOLING CAPACITY (KBTU/HR)	SENSIBLE (SHR)	HEATING CAPACITY (KBTU/HR)	COOLING EIR (BTU/BTU)	HEATING EIR (BTU/BTU)
5773.	0.001	2.0	0.	0.000	0.0	0.588	0.000	0.000	0.000	0.38	0.36

ZONE NAME	SUPPLY FLOW (CFM)	EXHAUST FLOW (CFM)	FAN (KW)	MINIMUM FLOW RATIO	OUTSIDE AIR FLOW (CFM)	COOLING CAPACITY (KBTU/HR)	SENSIBLE (SHR)	EXTRACTION RATE (KBTU/HR)	HEATING CAPACITY (KBTU/HR)	ADDITION RATE (KBTU/HR)	MULTIPLIER
ATZ1	3164.	0.	2.022	1.000	1698.	149.25	0.62	63.64	-159.70	-107.43	1.0
ATZ2	2609.	0.	1.668	1.000	1698.	131.85	0.63	52.49	-141.08	-90.08	1.0
EQUIP-RM	0.	0.	0.000	0.000	0.	0.00	0.00	0.00	0.00	0.00	1.0

SYSTEM NAME	SYSTEM TYPE	ALTITUDE MULTIPLIER	FLOOR AREA (SQFT)	MAX PEOPLE
HP-SYS-PERM	HP	1.020	23320.0	155.

SUPPLY FAN (CFM)	ELEC (KW)	DELTA-T (F)	RETURN FAN (CFM)	ELEC (KW)	DELTA-T (F)	OUTSIDE AIR RATIO	COOLING CAPACITY (KBTU/HR)	SENSIBLE (SHR)	HEATING CAPACITY (KBTU/HR)	COOLING EIR (BTU/BTU)	HEATING EIR (BTU/BTU)
21267.	0.001	1.6	0.	0.000	0.0	0.000	0.000	0.000	0.000	0.38	0.36

ZONE NAME	SUPPLY FLOW (CFM)	EXHAUST FLOW (CFM)	FAN (KW)	MINIMUM FLOW RATIO	OUTSIDE AIR FLOW (CFM)	COOLING CAPACITY (KBTU/HR)	SENSIBLE (SHR)	EXTRACTION RATE (KBTU/HR)	HEATING CAPACITY (KBTU/HR)	ADDITION RATE (KBTU/HR)	MULTIPLIER
BZ1	3359.	0.	1.757	1.000	0.	92.39	0.75	67.57	-98.86	-91.14	1.0
BZ2	1308.	0.	0.684	1.000	0.	36.84	0.74	26.31	-39.42	-35.48	1.0
BZ3	3926.	0.	2.054	1.000	0.	108.01	0.75	78.99	-115.57	-106.54	1.0
TZ1	3687.	0.	1.929	1.000	0.	103.43	0.74	74.18	-110.67	-100.05	1.0
TZ2	1444.	0.	0.755	1.000	0.	40.52	0.74	29.06	-43.36	-39.19	1.0
TZ3	3842.	0.	2.010	1.000	0.	106.21	0.75	77.30	-113.65	-104.27	1.0
IZ1	1850.	0.	0.968	1.000	0.	58.88	0.69	37.22	-63.00	-50.20	1.0
IZ2	1851.	0.	0.968	1.000	0.	58.90	0.69	37.23	-63.02	-50.22	1.0

MEDICAL OFFICE BUILDING, CHICAGO WATER LOOP HEAT PUMP WITH STORAGE DOE-2.1E-001 Wed Nov 10 15:17:48 1993SDL RUN 1
SAMP3.INP RUN 1
REPORT- SS-D PLANT MONTHLY LOADS SUMMARY FOR WLHP WEATHER FILE- TRY CHICAGO

	COOLING					HEATING					ELEC	
MONTH	COOLING ENERGY (MBTU)	TIME OF MAX DY HR	DRY-BULB TEMP	WET-BULB TEMP	MAXIMUM COOLING LOAD (KBTU/HR)	HEATING ENERGY (MBTU)	TIME OF MAX DY HR	DRY-BULB TEMP	WET-BULB TEMP	MAXIMUM HEATING LOAD (KBTU/HR)	ELEC-TRICAL ENERGY (KWH)	MAXIMUM ELEC LOAD (KW)
JAN	0.00000				0.000	0.000				0.000	39330.	172.785
FEB	0.00000				0.000	0.000				0.000	34552.	155.008
MAR	0.00000				0.000	0.000				0.000	34397.	128.454
APR	0.00000				0.000	0.000				0.000	31920.	116.889
MAY	0.00000				0.000	0.000				0.000	33112.	148.983
JUN	0.00000				0.000	0.000				0.000	40388.	164.007
JUL	0.00000				0.000	0.000				0.000	50369.	175.635
AUG	0.00000				0.000	0.000				0.000	46417.	171.665
SEP	0.00000				0.000	0.000				0.000	33322.	150.471
OCT	0.00000				0.000	0.000				0.000	29403.	98.707
NOV	0.00000				0.000	0.000				0.000	31979.	139.168
DEC	0.00000				0.000	0.000				0.000	36696.	149.693
TOTAL	0.000					0.000					441880.	
MAX					0.000					0.000		175.635

MAXIMUM DAILY INTEGRATED COOLING LOAD (DES DAY) 0.000 (KBTU)
MAXIMUM DAILY INTEGRATED COOLING LOAD (WTH FILE) 13273.906 (KBTU)

MEDICAL OFFICE BUILDING, CHICAGO WATER LOOP HEAT PUMP WITH STORAGE DOE-2.1E-001 Wed Nov 10 15:17:48 1993SDL RUN 1
SAMP3.INP RUN 1
REPORT- SS-P LOAD, ENERGY AND PART LOAD PUMP OPERATION IN WLHP WEATHER FILE- TRY CHICAGO

CIRC PUMP SIZE is 221.6 (GAL/MIN) POWER = 3.56 (KW) HEAT GAIN = 10946. (BTU/HR) or 0.1 (DEG F) MIN PLR = 0.50

MONTH		HEAT GAIN (MBTU)	ENERGY USE (KWH)	HEAT MODE (KWH)	COOL MODE (KWH)	Number of hours within each PART LOAD range 00-10	10-20	20-30	30-40	40-50	50-60	60-70	70-80	80-90	90-100	100+	TOTAL RUN HOURS
	SUM																
	PEAK	(KBTU/HR)	(KW)	(KW)	(KW)												
JAN	SUM	3.643	1185.962	1175.030	10.931	0	0	0	0	0	23	0	0	0	0	327	350
	PEAK	10.935	3.560	3.560	0.475												
	DAY/HR	30/21	30/21	30/21	30/ 8												
FEB	SUM	3.337	1086.284	1075.352	10.931	0	0	0	0	0	23	0	0	0	0	299	322
	PEAK	10.935	3.560	3.560	0.475												
	DAY/HR	27/21	27/21	27/21	27/ 8												
MAR	SUM	3.867	1258.993	1245.209	13.783	0	0	0	0	0	29	6	0	0	0	343	378
	PEAK	10.935	3.560	3.560	0.475												
	DAY/HR	31/21	31/21	31/21	31/ 8												
APR	SUM	3.614	1176.510	1052.566	123.942	0	0	0	0	0	38	11	0	0	0	315	364
	PEAK	10.935	3.560	3.560	1.780												
	DAY/HR	30/21	30/21	28/17	30/21												
MAY	SUM	3.448	1122.506	848.640	273.866	0	0	0	0	0	41	9	0	0	0	300	350
	PEAK	10.935	3.560	3.560	1.780												
	DAY/HR	29/21	29/21	29/18	29/21												
JUN	SUM	3.624	1179.844	663.765	516.079	0	0	0	0	0	29	22	0	0	0	313	364
	PEAK	10.935	3.560	3.560	1.780												
	DAY/HR	30/21	30/21	30/10	30/21												
JUL	SUM	3.724	1212.264	631.051	581.212	0	0	0	0	0	25	10	0	0	0	329	364
	PEAK	10.935	3.560	3.560	1.780												
	DAY/HR	31/21	31/21	31/10	31/21												
AUG	SUM	3.676	1196.832	664.275	532.557	0	0	0	0	0	26	17	0	0	0	321	364
	PEAK	10.935	3.560	3.560	1.780												
	DAY/HR	31/21	31/21	31/19	31/21												
SEP	SUM	3.455	1124.839	688.745	436.094	0	0	0	0	0	38	12	0	0	0	300	350
	PEAK	10.935	3.560	3.560	1.780												
	DAY/HR	30/21	30/21	30/21	28/21												
OCT	SUM	3.463	1127.448	1003.065	124.383	0	0	0	0	0	37	12	0	0	0	301	350
	PEAK	10.935	3.560	3.560	1.780												
	DAY/HR	30/21	30/21	28/14	30/21												
NOV	SUM	3.415	1111.808	1054.952	56.856	0	0	0	0	0	26	9	0	0	0	301	336
	PEAK	10.935	3.560	3.560	1.780												
	DAY/HR	30/21	30/21	30/21	2/21												
DEC	SUM	3.627	1180.743	1168.861	11.882	0	0	0	0	0	25	0	0	0	0	325	350
	PEAK	10.935	3.560	3.560	0.475												
	DAY/HR	30/21	30/21	30/21	30/ 8												
YR	SUM	42.895	13963.502	11271.005	2692.509	0	0	0	0	0	360	108	0	0	0	3774	4242
	PEAK	10.935	3.560	3.560	1.780												
	MON/DAY	12/30	12/30	12/30	11/ 2												

MEDICAL OFFICE BUILDING, CHICAGO WATER LOOP HEAT PUMP WITH STORAGE DOE-2.1E-001 Wed Nov 10 15:17:48 1993SDL RUN 1
SAMP3.INP RUN 1
REPORT- SS-P LOAD, ENERGY AND PART LOAD BOILER OPERATION FOR WLHP WEATHER FILE- TRY CHICAGO

BOILER SIZE is -0.6098 (MBTU/HR) EIR = 0.0200 HIR = 1.250

MONTH		UNIT LOAD (MBTU) (KBTU/HR)	ENERGY USE (KWH) (KW)	FUEL USE (MBTU) (KBTU/HR)	AUX ENERGY (KWH) (KW)	Number of hours within each PART LOAD range 00-10	10-20	20-30	30-40	40-50	50-60	60-70	70-80	80-90	90-100	100+	TOTAL RUN HOURS
JAN	SUM	-110.683	1055.125	144.363	1055.125	0	0	165	43	9	14	13	10	8	7	57	326
	PEAK	-1359.261	3.573	1455.959	3.573												
	DAY/HR	12/13	30/11	12/13	30/11												
FEB	SUM	-85.352	1006.353	117.867	1006.353	0	0	136	80	13	7	6	13	17	14	27	313
	PEAK	-1319.901	3.573	1424.074	3.573												
	DAY/HR	11/ 9	27/13	11/ 9	27/13												
MAR	SUM	-50.692	954.361	77.561	954.361	0	0	296	24	12	3	2	4	0	1	4	346
	PEAK	-1280.542	3.573	1391.685	3.573												
	DAY/HR	24/13	31/ 9	24/13	31/ 9												
APR	SUM	-19.799	457.749	32.232	457.749	0	0	220	1	1	0	0	0	0	0	0	222
	PEAK	-271.916	3.573	389.724	3.573												
	DAY/HR	8/ 9	9/ 9	8/ 9	9/ 9												
MAY	SUM	-10.608	248.650	17.335	248.650	0	0	161	0	0	0	0	0	0	0	0	161
	PEAK	-132.187	3.098	216.012	3.098												
	DAY/HR	10/ 9	10/ 9	10/ 9	10/ 9												
JUN	SUM	-0.652	15.280	1.065	15.280	0	0	20	0	0	0	0	0	0	0	0	20
	PEAK	-65.622	1.538	107.235	1.538												
	DAY/HR	24/ 9	24/ 9	24/ 9	24/ 9												
JUL	SUM	0.000	0.000	0.000	0.000	0	0	0	0	0	0	0	0	0	0	0	0
	PEAK	0.000	0.000	0.000	0.000												
	DAY/HR	31/ 1	31/ 1	31/ 1	31/ 1												
AUG	SUM	0.000	0.000	0.000	0.000	0	0	0	0	0	0	0	0	0	0	0	0
	PEAK	0.000	0.000	0.000	0.000												
	DAY/HR	31/ 1	31/ 1	31/ 1	31/ 1												
SEP	SUM	-7.025	164.663	11.480	164.663	0	0	113	0	0	0	0	0	0	0	0	113
	PEAK	-105.678	2.477	172.693	2.477												
	DAY/HR	23/ 9	23/ 9	23/ 9	23/ 9												
OCT	SUM	-17.745	413.945	28.960	413.945	0	0	237	2	0	0	0	0	0	0	0	239
	PEAK	-192.320	3.573	296.562	3.573												
	DAY/HR	21/ 9	21/ 9	21/ 9	21/ 9												
NOV	SUM	-42.219	833.155	65.852	833.155	0	0	262	22	3	6	6	4	1	1	0	305
	PEAK	-557.426	3.573	706.934	3.573												
	DAY/HR	26/11	30/21	26/11	30/21												
DEC	SUM	-79.213	1116.614	113.840	1116.614	0	0	186	73	10	14	22	9	6	14	11	345
	PEAK	-1214.943	3.573	1336.584	3.573												
	DAY/HR	9/ 9	30/13	9/ 9	30/13												
YR	SUM	-423.986	6265.896	610.555	6265.896	0	0	1796	245	48	44	49	40	32	37	99	2390
	PEAK	-1359.261	3.573	1455.959	3.573												
	MON/DAY	1/12	12/30	1/12	12/30												

MEDICAL OFFICE BUILDING, CHICAGO WATER LOOP HEAT PUMP WITH STORAGE DOE-2.1E-001 Wed Nov 10 15:17:48 1993SDL RUN 1
SAMP3.INP RUN 1
REPORT- SS-P LOAD, ENERGY AND PART LOAD COOLING TOWER FOR WLHP WEATHER FILE- TRY CHICAGO

TOWER SIZE is 1.225 (MBTU/HR) FAN = 3.66 (KW) PUMP = 1.20 (KW) PUMP = 221.57 (GAL/MIN)

MONTH		UNIT LOAD (MBTU) (KBTU/HR)	ENERGY USE (KWH) (KW)	FAN ENERGY (KWH) (KW)	PUMP ENERGY (KWH) (KW)	Number of hours within each PART LOAD range 00-10	10-20	20-30	30-40	40-50	50-60	60-70	70-80	80-90	90-100	100+	TOTAL RUN HOURS
JAN	SUM	2.243	63.976	14.583	49.393	13	21	3	3	1	0	0	0	0	0	0	41
	PEAK	378.301	1.676	0.472	1.205												
	DAY/HR	8/ 8	30/16	30/16	30/21												
FEB	SUM	1.165	64.872	14.275	50.597	27	14	0	1	0	0	0	0	0	0	0	42
	PEAK	139.217	1.625	0.420	1.205												
	DAY/HR	25/10	27/21	27/21	27/21												
MAR	SUM	10.975	248.917	62.255	186.661	46	46	19	17	28	0	0	0	0	0	0	156
	PEAK	394.537	1.780	0.575	1.205												
	DAY/HR	25/ 8	2/14	2/14	31/17												
APR	SUM	60.897	546.262	150.793	395.472	12	31	32	55	179	21	0	0	0	0	0	330
	PEAK	569.546	2.165	0.960	1.205												
	DAY/HR	27/17	27/17	27/17	30/21												
MAY	SUM	98.644	616.264	201.684	414.582	2	18	20	34	176	89	5	3	0	0	0	347
	PEAK	852.670	3.478	2.273	1.205												
	DAY/HR	21/13	21/13	21/13	29/21												
JUN	SUM	180.367	751.460	322.672	428.791	2	4	12	18	85	155	82	5	0	0	0	363
	PEAK	1041.354	3.373	2.168	1.205												
	DAY/HR	21/16	21/18	21/18	30/21												
JUL	SUM	272.506	972.118	537.429	434.691	0	0	6	16	12	81	169	56	21	3	0	364
	PEAK	1115.039	4.440	3.235	1.205												
	DAY/HR	19/12	13/13	13/13	31/21												
AUG	SUM	232.257	857.705	425.691	432.016	0	3	6	12	37	131	146	28	1	0	0	364
	PEAK	1062.108	3.689	2.484	1.205												
	DAY/HR	16/12	26/17	26/17	31/21												
SEP	SUM	113.299	637.064	220.041	417.025	2	16	22	24	169	98	19	0	0	0	0	350
	PEAK	901.351	3.001	1.796	1.205												
	DAY/HR	11/16	11/16	11/16	30/21												
OCT	SUM	47.454	539.542	146.225	393.319	16	43	23	69	178	0	0	0	0	0	0	329
	PEAK	352.851	1.897	0.692	1.205												
	DAY/HR	30/16	13/21	13/21	30/21												
NOV	SUM	20.475	270.878	77.862	193.016	42	44	17	13	25	21	0	0	0	0	0	162
	PEAK	602.232	2.244	1.039	1.205												
	DAY/HR	1/12	1/12	1/12	30/ 8												
DEC	SUM	0.928	44.368	9.431	34.936	15	13	0	1	0	0	0	0	0	0	0	29
	PEAK	162.244	1.573	0.368	1.205												
	DAY/HR	9/10	15/ 8	15/ 8	30/16												
YR	SUM	1041.210	5613.422	2182.943	3430.384	177	253	160	263	890	596	421	92	22	3	0	2877
	PEAK	1115.039	4.440	3.235	1.205												
	MON/DAY	7/19	7/13	7/13	12/30												

MEDICAL OFFICE BUILDING, CHICAGO WATER LOOP HEAT PUMP WITH STORAGE DOE-2.1E-001 Wed Nov 10 15:17:48 1993SDL RUN 1
SAMP3.INP RUN 1
REPORT- SS-A SYSTEM MONTHLY LOADS SUMMARY FOR HP-SYS-CORE WEATHER FILE- TRY CHICAGO

	COOLING						HEATING						ELEC	
MONTH	COOLING ENERGY (MBTU)	TIME OF MAX DY	TIME OF MAX HR	DRY-BULB TEMP	WET-BULB TEMP	MAXIMUM COOLING LOAD (KBTU/HR)	HEATING ENERGY (MBTU)	TIME OF MAX DY	TIME OF MAX HR	DRY-BULB TEMP	WET-BULB TEMP	MAXIMUM HEATING LOAD (KBTU/HR)	ELEC-TRICAL ENERGY (KWH)	MAXIMUM ELEC LOAD (KW)
JAN	0.00521	25	16	48.F	42.F	2.129	-48.259	2	11	6.F	5.F	-351.600	7246.	38.349
FEB	0.00039	12	15	45.F	39.F	0.392	-37.872	8	10	14.F	12.F	-270.406	6128.	31.991
MAR	1.24768	3	15	76.F	65.F	130.753	-22.726	24	10	7.F	5.F	-271.649	5387.	28.917
APR	0.39189	27	18	85.F	62.F	55.219	-4.138	8	10	32.F	28.F	-120.393	3012.	20.278
MAY	2.00826	21	13	87.F	76.F	181.318	-0.516	8	10	45.F	43.F	-44.754	2631.	28.649
JUN	11.46037	21	18	83.F	73.F	179.012	-0.029	22	10	61.F	56.F	-5.409	3995.	28.427
JUL	36.71872	13	13	93.F	78.F	214.709	-0.018	22	10	63.F	60.F	-4.745	7268.	32.269
AUG	25.35133	16	15	85.F	73.F	188.274	-0.045	3	10	62.F	58.F	-4.955	5938.	29.353
SEP	4.45718	11	15	87.F	72.F	168.764	-0.176	22	10	38.F	33.F	-35.946	2882.	27.404
OCT	0.01405	27	11	56.F	46.F	4.128	-2.044	20	21	37.F	33.F	-85.709	2636.	16.541
NOV	3.27964	2	16	77.F	62.F	157.674	-16.568	15	10	30.F	27.F	-185.607	4789.	26.943
DEC	0.00048	10	15	41.F	35.F	0.480	-37.454	25	10	19.F	18.F	-252.001	6402.	30.857
TOTAL	84.935						-169.846						58312.	
MAX						214.709						-351.600		38.349

REPORT- SS-C SYSTEM MONTHLY LOAD HOURS FOR HP-SYS-CORE WEATHER FILE- TRY CHICAGO

	NUMBER OF HOURS										COINCIDENT LOADS	
MONTH	HOURS COOLING LOAD	HOURS HEATING LOAD	HOURS COINCIDENT COOL-HEAT LOAD	HOURS FLOATING	HOURS HEATING AVAIL.	HOURS COOLING AVAIL.	HOURS FANS ON	HOURS FANS CYCLE ON	HOURS NIGHT VENTING	HOURS FLOATING WHEN FANS ON	HEATING LOAD AT COOLING PEAK (KBTU/HR)	ELECTRIC LOAD AT COOLING PEAK (KW)
JAN	5	325	3	417	744	744	327	0	0	0	0.000	9.989
FEB	1	299	1	373	672	672	299	0	0	0	-14.674	10.766
MAR	30	311	5	408	744	744	343	0	0	7	0.000	21.900
APR	28	112	10	590	720	720	315	0	0	185	0.000	15.873
MAY	36	33	5	680	744	744	300	0	0	236	0.000	28.649
JUN	154	31	14	549	720	720	313	0	0	142	0.000	28.353
JUL	305	14	8	433	744	744	329	0	0	18	0.000	31.727
AUG	267	36	14	455	744	744	321	0	0	32	0.000	29.353
SEP	57	24	6	645	720	720	300	0	0	225	0.000	27.404
OCT	21	87	7	643	744	744	301	0	0	200	0.000	8.393
NOV	54	248	8	426	720	720	303	0	0	9	0.000	26.943
DEC	1	325	1	419	744	744	325	0	0	0	-13.211	10.622
ANNUAL	959	1845	82	6038	8760	8760	3776	0	0	1054		

	-----COOLING-----				---HEATING---			DAY COOLING PEAK			
	JUL 13				JAN 2			JUL 19			
HOUR	HOURLY COOLING LOAD (KBTU)	SENSIBLE HEAT RATIO	DRY-BULB TEMP	WET-BULB TEMP	HOURLY HEATING LOAD (KBTU)	DRY-BULB TEMP	WET-BULB TEMP	HOURLY COOLING LOAD (KBTU)	SENSIBLE HEAT RATIO	DRY-BULB TEMP	WET-BULB TEMP
1	0.000	0.000	76.F	66.F	0.000	1.F	0.F	0.000	0.000	79.F	72.F
2	0.000	0.000	74.F	66.F	0.000	1.F	0.F	0.000	0.000	79.F	72.F
3	0.000	0.000	74.F	65.F	0.000	1.F	0.F	0.000	0.000	78.F	72.F
4	0.000	0.000	73.F	62.F	0.000	2.F	1.F	0.000	0.000	78.F	72.F
5	0.000	0.000	72.F	62.F	0.000	2.F	1.F	0.000	0.000	77.F	72.F
6	0.000	0.000	72.F	63.F	0.000	2.F	1.F	0.000	0.000	78.F	72.F
7	0.000	0.000	73.F	65.F	0.000	3.F	2.F	0.000	0.000	77.F	72.F
8	59.240	0.968	76.F	69.F	-283.386	4.F	3.F	102.567	0.967	79.F	72.F
9	167.735	0.328	82.F	72.F	-271.184	4.F	3.F	194.227	0.421	82.F	72.F
10	189.983	0.384	86.F	74.F	-344.805	5.F	4.F	201.691	0.465	85.F	73.F
11	206.023	0.418	89.F	76.F	-351.600	6.F	5.F	210.766	0.501	88.F	74.F
12	214.709	0.471	93.F	78.F	-332.819	8.F	7.F	202.586	0.532	89.F	74.F
13	186.237	0.550	95.F	78.F	-346.146	9.F	9.F	207.209	0.510	90.F	75.F
14	172.435	0.658	96.F	77.F	-329.527	11.F	11.F	199.869	0.521	89.F	75.F
15	180.252	0.672	97.F	77.F	-341.221	12.F	12.F	197.413	0.549	90.F	75.F
16	194.852	0.617	97.F	78.F	-325.745	14.F	13.F	200.861	0.526	91.F	76.F
17	172.468	0.735	99.F	77.F	-336.470	15.F	14.F	179.456	0.556	90.F	75.F
18	157.162	0.717	97.F	76.F	-325.347	15.F	15.F	167.941	0.483	86.F	74.F
19	149.184	0.680	95.F	75.F	-332.477	17.F	16.F	172.427	0.438	86.F	74.F
20	156.628	0.575	93.F	75.F	-323.992	17.F	16.F	148.047	0.330	80.F	72.F
21	0.000	0.000	90.F	74.F	-320.822	18.F	18.F	0.000	0.000	79.F	72.F
22	0.000	0.000	87.F	73.F	0.000	17.F	17.F	0.000	0.000	77.F	71.F
23	0.000	0.000	86.F	73.F	0.000	17.F	17.F	0.000	0.000	76.F	71.F
24	0.000	0.000	85.F	73.F	0.000	17.F	17.F	0.000	0.000	74.F	70.F
	---				---			---			
SUM								2385.060			
MAX	214.709				-351.600						

SYSTEM-TYPE HP SQFT/TON 268.3
COOLING PEAK 44.73 (BTU/HR- SQFT) HEATING PEAK -73.25 (BTU/HR- SQFT)
SUPPLY AIR PEAK FLOW 1.20 (CFM/SQFT)
OA FRAC AT CLG PEAK 0.651 OA FRAC AT HTG PEAK 0.651

* ASTERISKS INDICATE HOURS LOADS NOT MET

MEDICAL OFFICE BUILDING, CHICAGO WATER LOOP HEAT PUMP WITH STORAGE DOE-2.1E-001 Wed Nov 10 15:17:48 1993SDL RUN 1
SAMP3.INP RUN 1
REPORT- SS-A SYSTEM MONTHLY LOADS SUMMARY FOR HP-SYS-PERM WEATHER FILE- TRY CHICAGO

	COOLING						HEATING						ELEC	
MONTH	COOLING ENERGY (MBTU)	TIME OF MAX DY	TIME OF MAX HR	DRY-BULB TEMP	WET-BULB TEMP	MAXIMUM COOLING LOAD (KBTU/HR)	HEATING ENERGY (MBTU)	TIME OF MAX DY	TIME OF MAX HR	DRY-BULB TEMP	WET-BULB TEMP	MAXIMUM HEATING LOAD (KBTU/HR)	ELEC-TRICAL ENERGY (KWH)	MAXIMUM ELEC LOAD (KW)
JAN	0.08837	30	17	53.F	47.F	10.521	-79.832	2	9	4.F	3.F	-630.035	29778.	128.059
FEB	0.21546	13	11	39.F	36.F	27.318	-65.814	16	9	30.F	28.F	-510.081	26267.	116.615
MAR	3.98033	9	13	68.F	62.F	107.331	-44.076	24	9	7.F	6.F	-407.950	26547.	95.015
APR	36.26588	27	17	84.F	61.F	333.590	-14.202	8	9	30.F	27.F	-294.339	26727.	96.578
MAY	60.58792	24	10	58.F	50.F	415.281	-4.540	10	9	46.F	43.F	-163.621	28494.	114.935
JUN	109.72047	21	12	73.F	67.F	560.897	-0.071	23	21	56.F	48.F	-12.111	34447.	134.171
JUL	149.06900	6	10	73.F	62.F	581.222	0.000					0.000	40916.	136.203
AUG	131.95897	16	10	75.F	70.F	565.371	0.000					0.000	38424.	136.223
SEP	68.01752	11	16	86.F	72.F	452.997	-1.817	23	9	39.F	36.F	-105.713	28513.	118.435
OCT	25.58720	5	16	74.F	62.F	234.558	-10.101	20	9	41.F	35.F	-240.308	24686.	85.354
NOV	7.54162	1	12	69.F	61.F	271.229	-38.425	15	9	28.F	26.F	-463.361	24974.	106.187
DEC	0.04925	10	15	41.F	35.F	12.888	-67.690	27	9	31.F	30.F	-505.783	27952.	114.647
TOTAL	593.083						-326.567						357723.	
MAX						581.222						-630.035		136.223

MEDICAL OFFICE BUILDING, CHICAGO WATER LOOP HEAT PUMP WITH STORAGE DOE-2.1E-001 Wed Nov 10 15:17:48 1993SDL RUN 1
SAMP3.INP RUN 1
REPORT- SS-C SYSTEM MONTHLY LOAD HOURS FOR HP-SYS-PERM WEATHER FILE- TRY CHICAGO

	NUMBER OF HOURS										--COINCIDENT LOADS--	
MONTH	HOURS COOLING LOAD	HOURS HEATING LOAD	HOURS COINCIDENT COOL-HEAT LOAD	HOURS FLOATING	HOURS HEATING AVAIL.	HOURS COOLING AVAIL.	HOURS FANS ON	HOURS FANS CYCLE ON	HOURS NIGHT VENTING	HOURS FLOATING WHEN FANS ON	HEATING LOAD AT COOLING PEAK (KBTU/HR)	ELECTRIC LOAD AT COOLING PEAK (KW)
JAN	14	327	14	417	744	744	327	0	0	0	-74.998	62.384
FEB	34	299	34	373	672	672	299	0	0	0	-120.132	76.857
MAR	154	349	154	395	744	744	349	0	0	0	-34.931	73.835
APR	302	264	240	394	720	720	326	0	0	0	0.000	96.118
MAY	308	156	155	435	744	744	309	0	0	0	0.000	110.084
JUN	335	11	11	385	720	720	335	0	0	0	0.000	134.171
JUL	339	0	0	405	744	744	339	0	0	0	0.000	132.871
AUG	338	0	0	406	744	744	338	0	0	0	0.000	134.720
SEP	311	62	61	408	720	720	312	0	0	0	0.000	114.082
OCT	297	253	237	431	744	744	313	0	0	0	0.000	83.149
NOV	118	285	93	410	720	720	310	0	0	0	0.000	94.869
DEC	12	325	12	419	744	744	325	0	0	0	-115.294	67.228
ANNUAL	2562	2331	1011	4878	8760	8760	3882	0	0	0		

	-----COOLING-----				---HEATING---			DAY COOLING PEAK			
	JUL 6				JAN 2			JUL 6			
HOUR	HOURLY COOLING LOAD (KBTU)	SENSIBLE HEAT RATIO	DRY-BULB TEMP	WET-BULB TEMP	HOURLY HEATING LOAD (KBTU)	DRY-BULB TEMP	WET-BULB TEMP	HOURLY COOLING LOAD (KBTU)	SENSIBLE HEAT RATIO	DRY-BULB TEMP	WET-BULB TEMP
1	0.000	0.000	62.F	54.F	0.000	1.F	0.F	0.000	0.000	62.F	54.F
2	0.000	0.000	62.F	54.F	0.000	1.F	0.F	0.000	0.000	62.F	54.F
3	0.000	0.000	61.F	54.F	0.000	1.F	0.F	0.000	0.000	61.F	54.F
4	0.000	0.000	60.F	54.F	0.000	2.F	1.F	0.000	0.000	60.F	54.F
5	0.000	0.000	61.F	55.F	0.000	2.F	1.F	0.000	0.000	61.F	55.F
6	0.000	0.000	61.F	55.F	0.000	2.F	1.F	0.000	0.000	61.F	55.F
7	429.145 *	1.000	64.F	58.F	0.000	3.F	2.F	429.145 *	1.000	64.F	58.F
8	535.864 *	0.992	69.F	61.F	-611.701	4.F	3.F	535.864 *	0.992	69.F	61.F
9	581.222 *	0.935	73.F	62.F	-630.035	4.F	3.F	581.222 *	0.935	73.F	62.F
10	574.737 *	0.935	76.F	64.F	-594.115	5.F	4.F	574.737 *	0.935	76.F	64.F
11	570.144 *	0.936	78.F	64.F	-618.331	6.F	5.F	570.144 *	0.936	78.F	64.F
12	556.404 *	0.943	79.F	65.F	-576.913	8.F	7.F	556.404 *	0.943	79.F	65.F
13	541.387 *	0.951	80.F	66.F	-599.291	9.F	9.F	541.387 *	0.951	80.F	66.F
14	549.117 *	0.944	80.F	65.F	-572.238	11.F	11.F	549.117 *	0.944	80.F	65.F
15	548.087 *	0.936	81.F	66.F	-586.647	12.F	12.F	548.087 *	0.936	81.F	66.F
16	547.182 *	0.936	81.F	66.F	-558.866	14.F	13.F	547.182 *	0.936	81.F	66.F
17	544.226 *	0.934	81.F	67.F	-573.352	15.F	14.F	544.226 *	0.934	81.F	67.F
18	526.631 *	0.952	81.F	66.F	-543.045	15.F	15.F	526.631 *	0.952	81.F	66.F
19	515.167 *	0.951	78.F	64.F	-554.547	17.F	16.F	515.167 *	0.951	78.F	64.F
20	490.127	0.954	75.F	63.F	-525.450	17.F	16.F	490.127	0.954	75.F	63.F
21	0.000	0.000	72.F	61.F	-519.040	18.F	18.F	0.000	0.000	72.F	61.F
22	0.000	0.000	71.F	61.F	0.000	17.F	17.F	0.000	0.000	71.F	61.F
23	0.000	0.000	71.F	61.F	0.000	17.F	17.F	0.000	0.000	71.F	61.F
24	0.000	0.000	69.F	61.F	0.000	17.F	17.F	0.000	0.000	69.F	61.F
SUM								7509.439			
MAX	581.222				-630.035						

SYSTEM-TYPE	HP	SQFT/TON	481.5
COOLING PEAK	24.92 (BTU/HR- SQFT)	HEATING PEAK	-27.02 (BTU/HR- SQFT)
SUPPLY AIR PEAK FLOW	0.91 (CFM/SQFT)	MIN-OA/PERSON	0.00 (CFM)
OA FRAC AT CLG PEAK	0.000	OA FRAC AT HTG PEAK	0.000

* ASTERISKS INDICATE HOURS LOADS NOT MET

EQUIPMENT	SIZE (MBTU/H)	NUMBER INSTD	NUMBER AVAIL	SIZE (MBTU/H)	NUMBER INSTD	NUMBER AVAIL	SIZE (MBTU/H)	NUMBER INSTD	NUMBER AVAIL	SIZE (MBTU/H)	NUMBER INSTD	NUMBER AVAIL	SIZE (MBTU/H)	NUMBER INSTD	NUMBER AVAIL	SIZE (MBTU/H)	NUMBER INSTD	NUMBER AVAIL
DHW-HEATER	0.026	1	1															

MEDICAL OFFICE BUILDING, CHICAGO WATER LOOP HEAT PUMP WITH STORAGE DOE-2.1E-001 Wed Nov 10 15:17:48 1993PDL RUN 1
SAMP3.INP RUN 1
REPORT- PS-A PLANT ENERGY UTILIZATION SUMMARY WEATHER FILE- TRY CHICAGO

	SITE ENERGY												SOURCE
	2	3	4	5	6	7	8	9	10	11	12	13	14
MONTH	TOTAL HEAT LOAD (MBTU)	TOTAL COOLING LOAD (MBTU)	TOTAL ELECTR LOAD (MWH)	RCVRED ENERGY (MBTU)	WASTED RCVRABL ENERGY (MBTU)	FUEL INPUT COOLING (MBTU)	ELEC INPUT COOLING (MWH)	FUEL INPUT HEATING (MBTU)	ELEC INPUT HEATING (MWH)	FUEL INPUT ELECT (MBTU)	TOTAL FUEL INPUT (MBTU)	TOTAL SITE ENERGY (MBTU)	TOTAL SOURCE ENERGY (MBTU)
JAN	4.8	0.0	39.9	0.0	0.0	0.0	0.1	151.4	15.6	0.0	151.5	287.5	559.7
FEB	4.2	0.0	35.0	0.0	0.0	0.0	0.2	124.1	13.1	0.0	124.1	243.8	483.0
MAR	4.8	0.0	34.9	0.0	0.0	0.0	1.6	84.7	9.4	0.0	84.7	203.9	442.5
APR	4.9	0.0	32.4	0.0	0.0	0.0	6.2	39.5	3.1	0.0	39.5	150.1	371.3
MAY	5.2	0.0	33.6	0.0	0.0	0.0	9.4	25.0	1.2	0.0	25.0	139.5	368.6
JUN	5.4	0.0	40.8	0.0	0.0	0.0	16.9	9.0	0.5	0.0	9.0	148.1	426.4
JUL	6.0	0.0	50.7	0.0	0.0	0.0	25.3	8.7	0.4	0.0	8.7	181.8	528.0
AUG	6.1	0.0	46.8	0.0	0.0	0.0	21.7	8.9	0.4	0.0	8.9	168.5	487.6
SEP	5.7	0.0	33.7	0.0	0.0	0.0	10.8	19.7	0.7	0.0	19.7	134.7	364.6
OCT	5.6	0.0	29.8	0.0	0.0	0.0	5.0	37.2	2.3	0.0	37.2	138.9	342.5
NOV	5.1	0.0	32.4	0.0	0.0	0.0	2.1	73.3	7.9	0.0	73.3	184.0	405.4
DEC	4.9	0.0	37.2	0.0	0.0	0.0	0.1	121.1	13.6	0.0	121.1	248.0	502.0
TOTAL	62.7	0.0	447.2	0.0	0.0	0.0	99.3	702.7	68.1	0.0	702.7	2228.8	5281.6

HEATING LOADS	MBTU SUPPLIED	PCT OF TOTAL LOAD
DHW-HEATER	62.7	100.0
LOAD SATISFIED	62.7	100.0
TOTAL LOAD ON PLANT	62.7	

ELECTRICAL LOADS	KWH SUPPLIED	PCT OF TOTAL LOAD
ELECTRICITY	447159.2	100.0
LOAD SATISFIED	447159.2	100.0
TOTAL LOAD ON PLANT	447161.8	

SUMMARY OF LOADS MET

TYPE OF LOAD	TOTAL LOAD (MBTU)	LOAD SATISFIED (MBTU)	TOTAL OVERLOAD (MBTU)	PEAK OVERLOAD (MBTU)	HOURS OVERLOADED
HEATING LOADS	62.7	62.7	0.000	0.000	0
ELECTRICAL LOADS	1526.1	1526.1	0.000	0.000	0

ENERGY TYPE: UNITS: MBTU	ELECTRICITY	NATURAL-GAS
CATEGORY OF USE		
AREA LIGHTS	481.9	0.0
MISC EQUIPMT	294.2	0.0
SPACE HEAT	214.3	610.6
SPACE COOL	319.8	0.0
HEAT REJECT	19.2	0.0
PUMPS & MISC	69.0	0.0
VENT FANS	109.9	0.0
DOMHOT WATER	18.0	92.1
TOTAL	1526.1	702.7

TOTAL SITE ENERGY	2228.85 MBTU	82.8 KBTU/SQFT-YR GROSS-AREA	82.8 KBTU/SQFT-YR NET-AREA
TOTAL SOURCE ENERGY	5281.61 MBTU	196.2 KBTU/SQFT-YR GROSS-AREA	196.2 KBTU/SQFT-YR NET-AREA

PERCENT OF HOURS ANY SYSTEM ZONE OUTSIDE OF THROTTLING RANGE = 16.2
PERCENT OF HOURS ANY PLANT LOAD NOT SATISFIED = 0.0

NOTE: ENERGY IS APPORTIONED HOURLY TO ALL END-USE CATEGORIES.

MEDICAL OFFICE BUILDING, CHICAGO WATER LOOP HEAT PUMP WITH STORAGE DOE-2.1E-001 Wed Nov 10 15:17:48 1993EDL RUN 1
SAMP3.INP RUN 1
REPORT- ES-D ENERGY COST SUMMARY

UTILITY-RATE	RESOURCE	METERS	METERED ENERGY UNITS/YR	TOTAL CHARGE ($)	VIRTUAL RATE ($/UNIT)	RATE USED ALL YEAR?
ELEC-COST	ELECTRICITY	1 2 3 4 5	447159. KWH	34256.	0.0766	YES
GAS-COST	NATURAL-GAS	1 2 3 4 5	7027. THERM	6324.	0.9000	YES
				==========		
				40580.		

ENERGY COST/GROSS BLDG AREA: 1.51
ENERGY COST/NET BLDG AREA: 1.51

MEDICAL OFFICE BUILDING, CHICAGO WATER LOOP HEAT PUMP WITH STORAGE DOE-2.1E-001 Wed Nov 10 15:17:48 1993EDL RUN 1
SAMP3.INP RUN 1
REPORT- ES-E SUMMARY OF UTILITY-RATE: ELEC-COST

UTILITY-RATE: ELEC-COST

RESOURCE: ELECTRICITY
METERS: 1 2 3 4 5
POWER-FACTOR: 0.80
DEMAND-WINDOW: HOUR
BILLING-DAY: 31
EXCESS-KVAR-FRAC: 0.30
3413. BTU/KWH
RATE-LIMITATION: 0.0000
EXCESS-KVAR-CHG: 0.0000

RATE-QUALIFICATIONS

MIN-ENERGY: 0.0
MAX-ENERGY: 0.0
MIN-DEMAND: 0.0
MAX-DEMAND: 0.0
QUALIFY-RATE: ALL-MONTHS
USE-MIN-QUAL: NO

BLOCK-CHARGES

SUM-P-DEM
WIN-P-DEM

DEMAND-RATCHETS

MIN-MON-RATCHETS

MONTH	METERED ENERGY KWH	BILLING ENERGY KWH	METERED DEMAND KW	BILLING DEMAND KW	ENERGY CHARGE ($)	DEMAND CHARGE ($)	ENERGY CST ADJ ($)	TAXES ($)	SURCHRG ($)	FIXED CHARGE ($)	MINIMUM CHARGE ($)	VIRTUAL RATE ($/UNIT)	TOTAL CHARGE ($)
JAN	39867	39867	174.8	174.8	1452	1387	0	0	0	0	186	0.0712	2839
FEB	35049	35049	157.3	157.3	1279	1348	0	0	0	0	186	0.0749	2626
MAR	34936	34936	130.5	130.5	1274	1287	0	0	0	0	186	0.0733	2562
APR	32403	32403	118.1	118.1	1183	1259	0	0	0	0	186	0.0754	2443
MAY	33557	33557	150.2	150.2	1350	1458	0	0	0	0	186	0.0837	2808
JUN	40764	40764	165.3	165.3	1656	1569	0	0	0	0	186	0.0791	3224
JUL	50712	50712	176.8	176.8	2055	1645	0	0	0	0	186	0.0730	3700
AUG	46752	46752	172.7	172.7	1902	1619	0	0	0	0	186	0.0753	3521
SEP	33675	33675	151.6	151.6	1361	1461	0	0	0	0	186	0.0838	2823
OCT	29815	29815	100.2	100.2	1197	1329	0	0	0	0	186	0.0847	2526
NOV	32428	32428	140.9	140.9	1182	1311	0	0	0	0	186	0.0769	2493
DEC	37201	37201	151.7	151.7	1357	1335	0	0	0	0	186	0.0724	2692
TOTAL	447159	447159	176.8		17248	17007	0	0	0	0		0.0766	34256

MEDICAL OFFICE BUILDING, CHICAGO WATER LOOP HEAT PUMP WITH STORAGE DOE-2.1E-001 Wed Nov 10 15:17:48 1993EDL RUN 1
SAMP3.INP RUN 1
REPORT- ES-F BLOCK-CHARGE AND RATCHET SUMMARY FOR: ELEC-COST

UTILITY-RATE: ELEC-COST
RESOURCE: ELECTRICITY
ENERGY-UNITS: KWH
DEMAND-UNITS: KW
DEMAND-WINDOW: HOUR

BLOCK-CHARGES		JAN	FEB	MAR	APR	MAY	JUN	JUL	AUG	SEP	OCT	NOV	DEC	YEAR
SUM-P-DEM	USE: TIME-OF-USE													
	METERED DEMAND:	0.0	0.0	0.0	0.0	150.2	163.2	169.9	167.6	142.5	95.7	0.0	0.0	
	BILLING DEMAND:	0.0	0.0	0.0	0.0	152.9	163.2	169.9	167.6	152.9	152.9	0.0	0.0	
	DEMAND CHGS($):	0	0	0	0	1070	1142	1189	1173	1070	1070	0	0	6715
WIN-P-DEM	USE: TIME-OF-USE													
	METERED DEMAND:	152.9	130.5	107.7	118.1	0.0	0.0	0.0	0.0	0.0	0.0	119.9	129.3	
	BILLING DEMAND:	152.9	152.9	152.9	152.9	0.0	0.0	0.0	0.0	0.0	0.0	152.9	152.9	
	DEMAND CHGS($):	994	994	994	994	0	0	0	0	0	0	994	994	5962
TOTAL CHARGES ($):		994	994	994	994	1070	1142	1189	1173	1070	1070	994	994	12677

RATCHETS	TYPE	JAN	FEB	MAR	APR	MAY	JUN	JUL	AUG	SEP	OCT	NOV	DEC
SUM-RATCH	HIGHEST	152.9	152.9	152.9	152.9	152.9	152.9	152.9	152.9	152.9	152.9	152.9	152.9

MEDICAL OFFICE BUILDING, CHICAGO WATER LOOP HEAT PUMP WITH STORAGE DOE-2.1E-001 Wed Nov 10 15:17:48 1993EDL RUN 1
SAMP3.INP RUN 1
REPORT- ES-E SUMMARY OF UTILITY-RATE: GAS-COST

UTILITY-RATE: GAS-COST
RESOURCE: NATURAL-GAS
METERS: 1 2 3 4 5
DEMAND-WINDOW: HOUR
BILLING-DAY: 31
100000. BTU/THERM
RATE-LIMITATION: 0.0000

RATE-QUALIFICATIONS

MIN-ENERGY: 0.0
MAX-ENERGY: 0.0
MIN-DEMAND: 0.0
MAX-DEMAND: 0.0
QUALIFY-RATE: ALL-MONTHS
USE-MIN-QUAL: NO

BLOCK-CHARGES

DEMAND-RATCHETS

MIN-MON-RATCHETS

MONTH	METERED ENERGY THERM	BILLING ENERGY THERM	METERED DEMAND THERMS	BILLING DEMAND THERMS	ENERGY CHARGE ($)	DEMAND CHARGE ($)	ENERGY CST ADJ ($)	TAXES ($)	SURCHRG ($)	FIXED CHARGE ($)	MINIMUM CHARGE ($)	VIRTUAL RATE ($/UNIT)	TOTAL CHARGE ($)
JAN	1515	1515	14.8	14.8	1363	0	0	0	0	0	0	0.9000	1363
FEB	1241	1241	14.2	14.2	1117	0	0	0	0	0	0	0.9000	1117
MAR	847	847	14.0	14.0	762	0	0	0	0	0	0	0.9000	762
APR	395	395	3.9	3.9	355	0	0	0	0	0	0	0.9000	355
MAY	250	250	2.2	2.2	225	0	0	0	0	0	0	0.9000	225
JUN	90	90	1.1	1.1	81	0	0	0	0	0	0	0.9000	81
JUL	87	87	0.4	0.4	79	0	0	0	0	0	0	0.9000	79
AUG	89	89	0.4	0.4	80	0	0	0	0	0	0	0.9000	80
SEP	197	197	1.9	1.9	178	0	0	0	0	0	0	0.9000	178
OCT	372	372	3.0	3.0	334	0	0	0	0	0	0	0.9000	334
NOV	733	733	7.4	7.4	660	0	0	0	0	0	0	0.9000	660
DEC	1211	1211	13.4	13.4	1090	0	0	0	0	0	0	0.9000	1090
TOTAL	7027	7027	14.8		6324	0	0	0	0	0		0.9000	6324

```
                L D L   P R O C E S S O R   I N P U T   D A T A

                     Wed Nov 10 15:17:48 1993LDL RUN  2


* 499 * TITLE LINE-1 * OFFICE BUILDING & FLOWER SHOP, CHICAGO*
* 500 *       LINE-2 * VAV SYSTEM IN OFFICE & SZRH IN SHOP *
* 501 *       LINE-3 * DIRECT FIRED ABSORPTION W/ HWG *
* 502 *       LINE-4 * SAMP3.INP  RUN 2  *  ..
* 503 *
* 504 *                ABORT                ERRORS   ..
* 505 *                DIAGNOSTIC           WARNINGS    ..
* 506 *                RUN-PERIOD           JAN 1 1988  THRU  DEC 31 1988  ..
* 507 *                BUILDING-LOCATION    LATITUDE=42  LONGITUDE=88
* 508 *                                     TIME-ZONE=6  ALTITUDE=610 ..
* 509 *
* 510 *                LOADS-REPORT         SUMMARY=(LS-D) ..
* 511 *
* 512 *                     $ BUILDING DESCRIPTION
* 513 *
* 514 * $             THE MEDICAL OFFICE BUILDING ABOVE HAS BEEN REMODELED WITH
* 515 * $             DIFFERENT USAGES TO DEMONSTRATE NEW FEATURES OF DOE2.1D.
* 516 *
* 517 * $ STRUCTURE   REINFORCED CONCRETE CONSTRUCTION WITH 4IN CONCRETE FLOORS AND ROOF
* 518 * $             10FT FLOOR TO FLOOR HEIGHT, TWO STORIES HIGH.  RETURN AIR PLENUMS
* 519 * $             ARE NOT DEFINED.
* 520 *
* 521 * $ WALLS       USING CODE WORDS FROM THE DOE-2 LIBRARY (REFERENCE MANUAL PART 2)
* 522 * $             AND STARTING WITH THE OUTSIDE SURFACE AND MOVING INWARD:
* 523 * $                2IN PRECAST CONCRETE PANEL (CC03); 2IN POLYSTRENE INSULATION
* 524 * $                R-8 (IN35); 3IN AIRSPACE (AL21); 5/8IN GYPSUM BOARD (GP04);
* 525 * $                3/4IN FINISH PLASTER.
* 526 *
* 527 * $ ATRIUM ROOF BUILT-UP ROOFING (BR01); 3IN ROOF INSULATION R-8 (IN76);
* 528 * $             6IN CONCRETE (CC04); INSIDE FILM RESISTANCE .76
* 529 *
* 530 * $ OFFICE ROOF BUILT-UP ROOFING (BR01); 3IN ROOF INSULATION R-8 (IN76);
* 531 * $             2 FT AIR SPACE (AL33); 3/4IN LAY-IN ACCOUSTIC TILE (AC03);
* 532 * $             INSIDE-FILM-RESISTANCE .76.
* 533 *
* 534 * $ FLOORS      FIRST FL IS SLAB-ON-GRADE EFFECTIVE U-VALUE OF ENTIRE AREA .05.
* 535 *
* 536 * $ WINDOWS     OFFICE AREA 4FT HIGH AND FULL WIDTH OF EACH WALL, EXCEPT SOUTH
* 537 * $             WALL WHERE THERE ARE NO WINDOWS.  GLASS IS DOUBLE PANE TINTED
* 538 * $             WITH A SOLAR TRANSMITTANCE OF .53. WINDOWS HAVE INSIDE DRAPES
* 539 * $             THAT HAVE A PROBABILITY OF.7 OF BEING PULLED WHEN TRANSMITTED
* 540 * $             DIRECT RADIATION IS GREATER THAN 40 BTUH.  DRAPES ARE THEN REOPEN-
* 541 * $             ED WITH A PROBABILITY OF .2 WHENEVER SOLAR DROPS BELOW 40BTUH.
* 542 * $             ATRIUM GLASS IS THE SAME AS OFFICE GLASS EXCEPT THAT IT DOES NOT
* 543 * $             HAVE DRAPES.  THERE ARE TWO MAIN SECTIONS OF GLASS 29' WIDE BY
* 544 * $             30' HIGH WITH OVERHANGS AND SIDE FINS.  NOTICE THAT THE SKETCH
* 545 * $             OF THE BUILDING INDICATES A LARGE OVERHANG WHICH WOULD BE VERY
* 546 * $             DIFFICULT TO BUILD.  THIS WAS THE WAY IT WAS SIMULATED AS THIS
* 547 * $             METHOD IS EQUIVALENT TO MULTIPLE SURFACES THAT PROVIDE THE SAME
* 548 * $             SHADING GEOMETRY.
* 549 *
* 550 * $ INTERIORS   CEILINGS ARE SIMULATED AS PART OF THE ROOF STRUCTURE ON THE TOP
* 551 * $             FLOOR.  PARTITIONS SIMULATE A GLASS WALL BETWEEN ATRIUM AND
* 552 * $             OFFICE SPACES, BUT WALLS BETWEEN INTERIOR AND EXTERIOR OFFICES
* 553 * $             ARE NOT DEFINED.  WALLS BETWEEN THE EQUIPMENT ROOM AND OFFICES
* 554 * $             HAVE A U-VALUE OF .28.
* 555 *
```

```
    * 556 * $ SPACE LOADS LIGHTING IS RECESSED FLUORSCENT NON VENTED AT 1.5 WATTS/SQFT IN
    * 557 * $             THE OFFICES AND 2.2 WATT/SQFT IN THE FLOWER SHOP/ATRIUM.
    * 558 * $             PEOPLE IN OFFICES IS INPUT AT 150SQFT/PERSON.
    * 559 * $             PEOPLE IN ATRIUM ARE 6.
    * 560 * $             INFILTRATION IS SET AT .2 AIRCHANGES/HR WHEN FANS ARE OFF AND AT
    * 561 * $             .1 AIRCHANGE WHEN FANS ARE ON.
    * 562 * $             EQUIPMENT IN OFFICES IS SET AT 1 WATTS/SQFT AND 1.5 W/SQFT IN
    * 563 * $             THE FLOWER SHOP/ATRIUM.
    * 564 *
    * 565 *                     $ CONSTRUCTIONS
    * 566 *
    * 567 * ROOF-O        =LAYERS             MAT=(BR01,IN76,CC03,AL33,AC03)  I-F-R=.76 ..
    * 568 * ROOF-A        =LAYERS             MAT=(BR01,IN76,CC04)  I-F-R .76  ..
    * 569 * OFF-ROF       =CONSTRUCTION       LAYERS ROOF-O  ..
    * 570 * ATR-ROF       =CONSTRUCTION       LAYERS ROOF-A  ..
    * 571 * WALL-1        =LAYERS             MAT=(CC33,IN35,AL21,GP04,GP04)  ..
    * 572 * WL1           =CONSTRUCTION       LAYERS=WALL-1  ..
    * 573 * BW1           =CONSTRUCTION       U=.05 ..
    * 574 * BW2           =CONSTRUCTION       U=.0001   ..
    * 575 * WL2           =CONSTRUCTION       U=1.05   $ ATRIUM GLASS PARTITIONS $  ..
    * 576 * WL3           =CONSTRUCTION       U=.28    $ INTERIOR PARTITIONS $  ..
    * 577 *
    * 578 *                    $ GLASS DESCRIPTION
    * 579 *
    * 580 * GT1           =GLASS-TYPE   GLASS-TYPE-CODE 5  PANES 2  ..
    * 581 * GT2           =GLASS-TYPE   G-T-C 5  PANES 2  ..
    * 582 *
    * 583 *                         $ This command calls the file containing schedules
    * 584 *                         $ for offices that is on the sample run input
    * 585 *                         $ tape. It MUST reside in a directory on your
    * 586 *                         $ computer system so that this demonstration
    * 587 *                         $ of a GENERALIZED LIBRARY can function. For users
    * 588 *                         $ with a large computer system the file name should
    * 589 *                         $ include the full path name, or as an alternative
    * 590 *                         $ use the @@fileprefix command.
    @ 591 @ @@include /u3/doe2/21d/dev/SAMPLES/officsch.inc
1   *   1 *
1   *   2 * $ This is a demonstration of how to use the GENERAL LIBRARY FEATURE.
1   *   3 * $ We have created a file of the OFFICE LOADS SCHEDULES from the MEDICAL BLDG
1   *   4 * $ BDL file and named it OFFICSCH.INP  We then called these same schedules
1   *   5 * $ using the term -  @@include officsch.inp -  in these two input files.
1   *   6 *
1   *   7 *                    $ OFFICE SCHEDULES
1   *   8 *
1   *   9 * OC1           =DAY-SCHEDULE       (1,9) (0)  (10,12) (1)  (13,14) (.8,.4)
1   *  10 *                                   (15,18) (.7)  (19,21) (.4)  (22,24) (.2)  ..
1   *  11 * OC2           =DAY-SCHEDULE       (1,24) (.2)  ..
1   *  12 * OCCUPANCY     =WEEK-SCHEDULE      (MON,TUE) OC1       (WED) OC2
1   *  13 *                                   (THU,SAT) OC1       (SUN,HOL) OC2  ..
1   *  14 * OCCUP         =SCHEDULE           THRU DEC 31 OCCUPANCY  ..
1   *  15 *
1   *  16 * L1            =DAY-SCHEDULE       (1,6) (.2)  (7,12) (.9)  (13,14) (.8,.4)
1   *  17 *                                   (15,18) (.7)  (19,21) (.4)  (22,24) (.2)  ..
1   *  18 * L2            =DAY-SCHEDULE       (1,24) (.2)  ..
1   *  19 * LIGHTS        =WEEK-SCHEDULE      (MON,TUE) L1         (WED) L2
1   *  20 *                                   (THU,SAT) L1         (SUN,HOL) L2 ..
1   *  21 * LT1           =SCHEDULE           THRU DEC 31 LIGHTS  ..
1   *  22 *
1   *  23 * ES1           =DAY-SCHEDULE       (1,9) (0)  (10,21) (.9)  (22,24) (.4)  ..
1   *  24 * ES2           =DAY-SCHEDULE       (1,9) (0)  (10,24) (.4)  ..
1   *  25 * EQUIPMENT     =WEEK-SCHEDULE      (MON,TUE) ES1       (WED) ES2
1   *  26 *                                   (THU,SAT) ES1       (SUN,HOL) ES2   ..
1   *  27 * EQ1           =SCHEDULE           THRU DEC 31 EQUIPMENT  ..
1   *  28 *
1   *  29 * I1            =DAY-SCHEDULE       (1,9) (1)  (10,21) (.5)  (22,24) (1)  ..
```

```
1    *  30 * INFILTRAT     =WEEK-SCHEDULE        (ALL) I1   ..
1    *  31 * INF1          =SCHEDULE             THRU DEC 31 INFILTRAT   ..
1    *  32 *
file : INPUT2.TMP
     * 592 *
     * 593 *                        $ FLOWER SHOP SCHEDULES $
     * 594 *
     * 595 * OC4 = D-SCH (1,7) (0)  (8,11) (.1,.2,.5,.5)  (12,15) (.7)
     * 596 *             (16,21) (.8,.7,.5,.5,.3,.3)  (22,24) (0)  ..
     * 597 * OC5 = D-SCH (1,7) (0)  (8,11) (.1,.2,.5,.6)  (12,17) (.8)
     * 598 *             (18,22) (.6,.2,.2,.2,.1)  (23,24) (0)  ..
     * 599 * OC6 = D-SCH (1,24) (0)  ..
     * 600 * OCCUP2 = SCH THRU DEC 31 (WD) OC4 (SAT) OC5 (SUN,HOL) OC6  ..
     * 601 *
     * 602 * L4 = D-SCH (1,7) (0)  (8,9) (.2,.5)  (10,18) (.9)
     * 603 *           (19,24) (.6,.6,.5,.2,0,0)  ..
     * 604 * L5 = D-SCH (1,7) (0)  (8,10) (.1,.3,.6)  (11,18) (.9)
     * 605 *           (19,24) (.5,.3,.3,.1,0,0)  ..
     * 606 * L6 = D-SCH (1,24) (0)  ..
     * 607 * LIGHTS2 = SCH THRU DEC 31 (WD) L4 (SAT) L5 (SUN,HOL) L6  ..
     * 608 *
     * 609 * IF4 = D-SCH (1,6) (1)  (7,21) (0)  (22,24) (1)  ..
     * 610 * IF5 = D-SCH (1,6) (1)  (7,22) (0)  (23,24) (1)  ..
     * 611 * IF6 = D-SCH (1,24) (1) ..
     * 612 * INFIL = SCH THRU DEC 31 (WD) IF4 (SAT) IF5 (SUN,HOL) IF6  ..
     * 613 *
     * 614 * EQ2   = SCH THRU DEC 31 (ALL) (1,24) (1) ..  $ REFRIGERATOR COMPRESSOR HEAT
     * 615 *                                              $ REJECTED TO SPACE
     * 616 *
     * 617 * SHADE-MULT    =SCHEDULE          THRU DEC 31 (ALL) (1,24) (.6)  ..
     * 618 * COND-MULT     =SCHEDULE          THRU DEC 31 (ALL) (1,24) (.90)  ..
     * 619 * CLOSE-SHADE   =SCHEDULE          THRU DEC 31 (ALL) (1,24) (40)  ..
     * 620 * REOPEN-PROB   =SCHEDULE          THRU DEC 31 (ALL) (1,24) (.2)  ..
     * 621 *
     * 622 *                  $ SET DEFAULTS
     * 623 *
     * 624 *          SET-DEFAULT FOR  EXTERIOR-WALL  HEIGHT=10  AZIMUTH=180
     * 625 *                                          CONSTRUCTION=WL1  ..
     * 626 *          SET-DEFAULT FOR  WINDOW         HEIGHT=4   Y=4  GLASS-TYPE=GT1
     * 627 *                           MAX-SOLAR-SCH=CLOSE-SHADE   SUN-CTRL-PROB .7
     * 628 *                           WIN-SHADE-TYPE=MOVABLE-INTERIOR
     * 629 *                           SHADING-SCHEDULE=SHADE-MULT
     * 630 *                           CONDUCT-SCHEDULE=COND-MULT
     * 631 *                           OPEN-SHADE-SCH=REOPEN-PROB  ..
     * 632 *
     * 633 *                  $ SPACE DESCRIPTION
     * 634 *
     * 635 * OFFICE        =SPACE-CONDITIONS    TEMPERATURE=(74)  FLOOR-WEIGHT=70
     * 636 *                                    EQUIPMENT-W/SQFT=1  EQUIP-SCHEDULE=EQ1
     * 637 *                                    LIGHTING-W/SQFT=1.5  LIGHTING-SCHEDULE=LT1
     * 638 *                                    INF-METHOD=AIR-CHANGE  AIR-CHANGES/HR=.2
     * 639 *                                    LIGHTING-TYPE=SUS-FLUOR
     * 640 *                                    PEOPLE-HG-LAT=200  PEOPLE-HG-SENS=250
     * 641 *                                    PEOPLE-SCHEDULE=OCCUP   ..
     * 642 *
     * 643 * ATRIUM        =SPACE-CONDITIONS    TEMPERATURE=(74)  FLOOR-WEIGHT=100
     * 644 *                                    LIGHTING-SCHEDULE=LIGHTS2
     * 645 *                                    LIGHTING-TYPE=INCAND
     * 646 *                                    LIGHTING-W/SQFT=2.2
     * 647 *                                    EQUIP-SCHEDULE=EQ2
     * 648 *                                    EQUIPMENT-W/SQFT=1.5
     * 649 *                                    NUMBER-OF-PEOPLE=6
     * 650 *                                    PEOPLE-HEAT-GAIN= 550
     * 651 *                                    PEOPLE-SCHEDULE = OCCUP2
     * 652 *                                    INF-SCHEDULE=INFIL  AIR-CHANGES/HR=.2
```

```
* 653 *                                  INF-METHOD=AIR-CHANGE   ..
* 654 *
* 655 * BZ1          =SPACE              S-C=OFFICE  NUMBER-OF-PEOPLE=20
* 656 *                                  AREA=3230  VOLUME=29070  AZ=90  Y=200  ..
* 657 *
* 658 *
* 659 * E1           =EXTERIOR-WALL      WIDTH=200  ..
* 660 * W1           =WINDOW             WIDTH=200  ..
* 661 *
* 662 * E1S          =EXTERIOR-WALL      W=17  AZ=90  X=200  ..
* 663 *
* 664 *               UNDERGROUND-FLOOR  AREA=3230  CONS=BW1  ..
* 665 *
* 666 * BZ2          =SPACE              S-C=OFFICE  AREA=1660 VOLUME=14940
* 667 *                                  NUMBER-OF-PEOPLE=10  AZ=180  X=100  Y=200  ..
* 668 *
* 669 * E2           =EXTERIOR-WALL      WIDTH=100  ..
* 670 * W2           =WINDOW             WIDTH=100  ..
* 671 *
* 672 *               UNDERGROUND-FLOOR  AREA=1660  CONS=BW1  ..
* 673 *
* 674 * BZ3          =SPACE              LIKE BZ1  AZ=-90  X=100  Y=0  ..
* 675 *
* 676 * E3           =EXTERIOR-WALL      LIKE E1  ..
* 677 * W3           =WINDOW             LIKE W1  ..
* 678 *
* 679 * E3S          =EXTERIOR-WALL      W=17  AZ=270  Y=17  ..
* 680 *
* 681 *               UNDERGROUND-FLOOR  AREA=3230  CONS=BW1  ..
* 682 *
* 683 * TZ1          =SPACE              LIKE BZ1  Z=10  ..
* 684 *
* 685 * R1           =ROOF               H=17  W=200  AZ=180  TILT=0  Z=10
* 686 *                                  CONS=OFF-ROF  ..
* 687 *
* 688 *               EXTERIOR-WALL      LIKE E1  ..
* 689 *               WINDOW             LIKE W1  ..
* 690 *
* 691 *               EXTERIOR-WALL      LIKE E1S  ..
* 692 *
* 693 * TZ2          =SPACE              LIKE BZ2  Z=10  ..
* 694 *
* 695 *               ROOF               LIKE R1  H=20  W=83  ..
* 696 *
* 697 *               EXTERIOR-WALL      LIKE E2  ..
* 698 *               WINDOW             LIKE W2  ..
* 699 *
* 700 * TZ3          =SPACE              LIKE BZ3  Z=10  ..
* 701 *               ROOF               LIKE R1  H=17  W=180  ..
* 702 *               EXTERIOR-WALL      LIKE E3  ..
* 703 *               WINDOW             LIKE W3  ..
* 704 *               EXTERIOR-WALL      LIKE E3S  ..
* 705 *
* 706 * IZ1          =SPACE              S-C=OFFICE  AREA=3540 VOLUME=70800
* 707 *                                  NUMBER-OF-PEOPLE=40  AZ=90  X=17  Y=180  ..
* 708 *
* 709 * IN1          =INTERIOR-WALL      AREA=1200  NEXT-TO ATZ1  CONS=WL2  ..
* 710 * IN2          =INTERIOR-WALL      AREA=1200  NEXT-TO ATZ2  CONS=WL2 ..
* 711 * IN3          =INTERIOR-WALL      AREA=800  NEXT-TO EQUIP-RM  CONS=WL3 ..
* 712 *               ROOF               LIKE R1  H=18  W=180  Z=20  ..
* 713 *               ROOF               LIKE R1  H=15  W=20  Y=18  Z=20  ..
* 714 *               EXTERIOR-WALL      H=20  W=18  AZ=90  X=180  ..
* 715 *               UNDERGROUND-FLOOR  AREA=3540  CONS=BW1  ..
* 716 *
* 717 * IZ2          =SPACE              LIKE IZ1  AZ=-90  X=83  Y=0  ..
```

```
* 718 *
* 719 *                INTERIOR-WALL       LIKE IN1  NEXT-TO ATZ1  ..
* 720 *                INTERIOR-WALL       LIKE IN2  NEXT-TO ATZ2  ..
* 721 *                INTERIOR-WALL       LIKE IN3  ..
* 722 *                EXTERIOR-WALL       H=20  W=18  AZ=270  Y=18  ..
* 723 *                ROOF                LIKE R1  H=18  W=180  Z=20  ..
* 724 *                ROOF                LIKE R1  H=15  W=20  X=160  Y=18  Z=20  ..
* 725 *                UNDERGROUND-FLOOR   AREA=3540  CONS=BW1  ..
* 726 *
* 727 * ATZ1          =SPACE               S-C=ATRIUM  AREA=1800  VOLUME=16200
* 728 *                                    X=35  Y=40  ..
* 729 *
* 730 * ATROOF-1      =ROOF                HEIGHT=66.6  WIDTH=30
* 731 *                                    AZIMUTH=0  TILT=26  X=30  Y=60  Z=20
* 732 *                                    CONS=ATR-ROF  ..
* 733 * E4            =EXTERIOR-WALL       H=14.5  W=60  AZ=270  Y=60  Z=20  ..
* 734 * E5            =EXTERIOR-WALL       LIKE E4  AZ=90  X=30  Y=0  ..
* 735 * F1            =UNDERGROUND-FLOOR   AREA=1800  CONS=BW2  ..
* 736 * FRAME-A       =EXTERIOR-WALL       HEIGHT=29  WIDTH=30  Z=20  ..
* 737 * WINDOW-A      =WINDOW              H=28.9  W=29.9  X=.05  Y=.05  GLASS-TYPE=GT2
* 738 *                                    OVERHANG-A=6  OH-B=0  OH-D=48.5  OH-W=42
* 739 *                                    OVERHANG-ANGLE=116  LEFT-FIN-A=0  L-F-B=0
* 740 *                                    L-F-H=30  L-F-D=3   RIGHT-FIN-A=0  R-F-B=0
* 741 *                                    R-F-H=30  R-F-D=3  ..
* 742 *                EXTERIOR-WALL       LIKE FRAME-A  HEIGHT=10.7  W=30  Z=9.3 ..
* 743 *                WINDOW              LIKE WINDOW-A  H=10.6  W=29.9  L-F-H=10.7
* 744 *                                                   R-F-H=10.7  ..
* 745 *
* 746 * ATZ2          =SPACE               LIKE ATZ1  Y=100  ..
* 747 *
* 748 * ATROOF-2      =ROOF                LIKE ATROOF-1  ..
* 749 *                EXTERIOR-WALL       LIKE E4  ..
* 750 *                EXTERIOR-WALL       LIKE E5  ..
* 751 *                UNDERGROUND-FLOOR   LIKE F1  ..
* 752 * FRAME-B       =EXTERIOR-WALL       LIKE FRAME-A  ..
* 753 * WINDOW-B      =WINDOW              LIKE WINDOW-A  ..
* 754 *
* 755 * EQUIP-RM      =SPACE               ZONE-TYPE=UNCONDITIONED
* 756 *                                    AREA=1200  VOLUME=17580  X=35  ..
* 757 *
* 758 *                EXTERIOR-WALL       HEIGHT=20  WIDTH=30  ..
* 759 *
* 760 *                ROOF                H=41.2  W=30  CONS=OFF-ROF
* 761 *                                    TILT=15  Z=9.3  X=30  Y=40  AZIMUTH=0 ..
* 762 *
* 763 *                INTERIOR-WALL       AREA=279  CONS=WL3  NEXT-TO ATZ1 ..
* 764 *                UNDERGROUND-FLOOR   AREA=1200  CONS=BW1  ..
* 765 *
* 766 *
* 767 * END  ..
* 768 * COMPUTE LOADS  ..
* 769 * INPUT SYSTEMS  ..
```

```
* 770 * SYSTEMS-REPORT  SUMMARY (SS-D,SS-A,SS-J)  ..
* 771 * SUBR-FUNCTIONS   DKTEMP-3=*dktempF*  ..
* 772 *
* 773 *                 $ HVAC SYSTEMS DESCRIPTION
* 774 *
* 775 * $ DESIGN TEMPS  ATRIUM  COOLING 76F-SUMMER, 72F-WINTER   HEATING SETBACK 65F
* 776 * $               OFFICE  COOLING 76F   HEATING 72F
* 777 * $ SYSTEM TYPE   THE OFFICE IS SERVED BY A VAVS SYSTEM.
* 778 *
* 779 * $               THE ATRIUM/FLOWER SHOP IS SERVED BY A REHEAT SYSTEM CONVERTED
* 780 * $               TO A CONSTANT VOLUME-VARIABLE TEMPERATURE SYSTEM. THE FUNCTION
* 781 * $               FEATURE IS USED TO SIMULATE THE CONTROL OF THIS UNIT BY USING A
* 782 * $               RETURN AIR STAT RATHER THAN HOLDING THE SUPPLY TEMPERATURE
* 783 * $               CONSTANT.  THIS IS A VERY COMMON MODELING REQUIREMENT AS MANY
* 784 * $               REHEAT SYSTEMS HAD BOILERS TURNED OFF IN THE SUMMER AND OVER-
* 785 * $               COOLED WITHOUT SOME WAY TO MODULATE THE SUPPLY AIR TEMPERATURE.
* 786 *
* 787 * $               BOTH SYSTEMS HAVE DRY BULB ECONOMIZERS WITH A 68F LIMIT ON THE
* 788 * $               VAV SYSTEM AND ON THE REHEAT SYSTEM.
* 789 *
* 790 *                     $ AIR HANDLING UNIT SCHEDULES
* 791 *
* 792 * DAYS          = WEEK-SCHEDULE (MON,SAT) (1,7)(0)(8,9)(-999)(10,21)(1)(22,24)(0)
* 793 *                               (SUN,HOL) (1,24)(0)  ..
* 794 * AHU-SCHED     = SCHEDULE      THRU DEC 31 DAYS  ..
* 795 *
* 796 *                     $ HEATING THERMOSTAT SCHEDULE
* 797 *
* 798 * THEAT1        = SCHEDULE THRU DEC 31 (MON,SAT) (1,7)(65)(8,21)(72)(22,24)(65)
* 799 *                                      (SUN,HOL) (1,24)(65)  ..
* 800 *
* 801 *                    $ COOLING THERMOSTAT SCHEDULE
* 802 *
* 803 * TCOOL1        = SCHEDULE THRU DEC 31 (MON,SAT) (1,7)(90)(8,21)(76)(22,24)(90)
* 804 *                                      (SUN,HOL) (1,24)(90)  ..
* 805 *
* 806 * MIN-OA        = SCHEDULE  THRU DEC 31 (ALL) (1,9)(0) (10,21)(-999) (22,24)(0) ..
* 807 *
* 808 * HEAT-OFF-SUM  = SCHEDULE  THRU MAY 15 (ALL) (1,24) (1)
* 809 *                          THRU OCT 15 (ALL) (1,24) (0)
* 810 *                          THRU DEC 31 (ALL) (1,24) (1)  ..
* 811 *
* 812 *                        $ ZONE DESCRIPTION
* 813 *
* 814 * ENV-ATR       = ZONE-CONTROL  D-H-T 72  D-C-T 74  H-T-SCH THEAT1  C-T-SCH TCOOL1
* 815 *                               T-TYPE PROPORTIONAL  ..
* 816 * ENV-OFF       = ZONE-CONTROL  D-H-T 74  D-C-T 74  H-T-SCH THEAT1  C-T-SCH TCOOL1
* 817 *                               T-TYPE REVERSE-ACTION  ..
* 818 * ATZ1          = ZONE          Z-C ENV-ATR  OUTSIDE-AIR-CFM 665  ..
* 819 * ATZ2          = ZONE          LIKE ATZ1  ..
* 820 * EQUIP-RM      = ZONE          ZONE-TYPE=UNCONDITIONED ..
* 821 * BZ1           = ZONE          Z-C ENV-OFF  OA-CFM/PER=15  ..
* 822 * BZ2           = ZONE  LIKE BZ1  ..
* 823 * BZ3           = ZONE  LIKE BZ1  ..
* 824 * TZ1           = ZONE  LIKE BZ1  ..
* 825 * TZ2           = ZONE  LIKE BZ1  ..
* 826 * TZ3           = ZONE  LIKE BZ1  ..
```

```
* 827 * IZ1          = ZONE  LIKE BZ1  ..
* 828 * IZ2          = ZONE  LIKE BZ1  ..
* 829 *
* 830 * FS-SYS       = SYSTEM        SYSTEM-TYPE=RHFS  MAX-S-T=100  MIN-S-T=55
* 831 *                               SUPPLY-STATIC=3  SUPPLY-EFF=.45  ECONO-LIMIT-T 68
* 832 *                               FAN-SCHEDULE=AHU-SCHED  REHEAT-DELTA-T 50
* 833 *                               HEATING-SCHEDULE=HEAT-OFF-SUM
* 834 *                               NIGHT-CYCLE-CTRL=CYCLE-ON-FIRST
* 835 *                               ZONE-NAMES=(ATZ1,ATZ2,EQUIP-RM)
* 836 *                               FUNCTION=('sfn0','sfn1')  ..
* 837 *
* 838 * OFF-SYS      = SYSTEM        SYSTEM-TYPE=VAVS  MAX-S-T=120  MIN-S-T=60
* 839 *                               SUPPLY-STATIC=5  SUPPLY-EFF=.55  ECONO-LIMIT-T=68
* 840 *                               FAN-SCHEDULE=AHU-SCHED  MIN-CFM-RATIO=.3
* 841 *                               FAN-CONTROL=SPEED  HEAT-SET-T=100
* 842 *                               RETURN-AIR-PATH=DUCT  OA-CONTROL=TEMP
* 843 *                               NIGHT-CYCLE-CTRL=CYCLE-ON-ANY
* 844 *                               MIN-AIR-SCH=MIN-OA    REHEAT-DELTA-T=55
* 845 *                               ZONE-NAMES=(BZ1,BZ2,BZ3,TZ1,TZ2,TZ3,IZ1,IZ2) ..
* 846 * PLANT1 = PLANT-ASSIGNMENT  SYSTEM-NAMES = (FS-SYS,OFF-SYS)
* 847 *                           DHW-SIZE     = 0
* 848 *                           DHW-GAL/MIN  = 2.22
* 849 *                           DHW-SCH      = DOMHW  ..
* 850 *
* 851 * D1 = D-SCH (1,7) (0)  (8,21) (.1,.2,.3,.4,.55,.6,.6,.45,.4,.45,.45,.4,.3,.3)
* 852 *                      (22,24) (0)  ..
* 853 * D2 = D-SCH (1,7) (0)  (8,22) (.15,.2,.25,.4,.5,.55,.55,.45,.45,.45,.45,.4,.35,
* 854 *                              .25,.2)  (23,24) (0)  ..
* 855 * D3 = D-SCH (1,9) (0)  (10,19) (.1,.25,.3,.35,.35,.3,.3,.35,.3,.2)
* 856 *                      (20,24) (0)  ..
* 857 * DOMHW = SCH THRU DEC 31 (WD) D1  (SAT) D2  (SUN,HOL) D3  ..
* 858 * END  ..
* 859 *
* 860 * $ THE FOLLOWING IS THE FUNCTION INPUT TO CONTROL THE SUPPLY AIR TEMPERATURE OF
* 861 * $ THE REHEAT UNIT WITH A RETURN AIR THERMOSTAT.
* 862 *
* 863 * FUNCTION NAME=dktempF          ..
* 864 *   ASSIGN  IHR=IHR  IDAY=IDAY  IMO=IMO  INILZE=INILZE ..
* 865 *   ASSIGN  TR=TR   $ return air temp $
* 866 *           TC=TC   $ suppy temp $
* 867 *           TH=TH   $ hot-deck   temp $  ..
* 868 *   ASSIGN  TCTR=TABLE (70,70) (80,50) ..  $ pwl function of tc vs tr $
* 869 *   ASSIGN  TRLAST = F-SYS-VAR1        ..
* 870 *   CALCULATE ..
* 871 *       IF ( (IDAY .EQ. 7) .AND. (IMO .EQ. 7) )
* 872 *      1    PRINT 1, IMO, IDAY, IHR, TC, TH, TRLAST
* 873 *  1    FORMAT( ' dktempF-- IMO, IDAY, IHR=',3f3.0,' TC='f7.2,' TH='f7.2
* 874 *      1          ' TRLAST='f7.2 )
* 875 *       IF( TRLAST .EQ. 0. )    RETURN
* 876 *       TC = PWL( TCTR, TRLAST )
* 877 *       IF ( (IDAY .EQ. 7) .AND. (IMO .EQ. 7) )
* 878 *      1    PRINT 2, TC
* 879 *  2    FORMAT( '                                  new TC='f7.2 )
* 880 *       END
```

---------- S Y M B O L T A B L E ----------

IDAY	(GLOBAL)	IHR	(GLOBAL)	IMO	(GLOBAL)	TC	(GLOBAL)	TCTR	(TABLE)
TH	(GLOBAL)	TRLAST	(GLOBAL)						

```
* 881 * END-FUNCTION ..
* 882 * FUNCTION NAME=sfn0    LEVEL=BUILDING      ..
* 883 *   ASSIGN  IHR=IHR  IDAY=IDAY  IMO=IMO  INILZE=INILZE ..
```

```
* 884 *   ASSIGN  TR=TR   $ return air temp $
* 885 *           TC=TC   $ suppy temp $
* 886 *           TH=TH   $ hot-deck   temp $  ..
* 887 *   CALCULATE ..
* 888 *       IF( INILZE .LT. 4 )  RETURN
* 889 *       IF( (IDAY .NE. 7) .OR. (IMO .NE. 7) ) RETURN
* 890 *       PRINT 9
* 891 *  9    FORMAT(1X)
* 892 *       PRINT 1, IMO, IDAY, IHR, TC, TH, TR
* 893 *  1    FORMAT( ' sfn0   -- IMO, IDAY, IHR=',3f3.0,' TC=',f7.2,
* 894 *      1        ' TH=',f7.2,' TR=',f7.2 )
* 895 *       END
```

---------- S Y M B O L T A B L E ----------

```
IDAY     (GLOBAL)      IHR      (GLOBAL)      IMO      (GLOBAL)      INILZE   (GLOBAL)      TC       (GLOBAL)
TH       (GLOBAL)      TR       (GLOBAL)
```

```
* 896 * END-FUNCTION ..
* 897 * FUNCTION NAME=sfn1     LEVEL=BUILDING      ..
* 898 *   ASSIGN  IHR=IHR  IDAY=IDAY  IMO=IMO  INILZE=INILZE ..
* 899 *   ASSIGN  TR=TR   $ return air temp $
* 900 *           TC=TC   $ suppy temp $
* 901 *           TH=TH   $ hot-deck   temp $  ..
* 902 *   ASSIGN  TRLAST = F-SYS-VAR1        ..
* 903 *   CALCULATE ..
* 904 * C---  store TR for use by 'dktempF'
* 905 *       TRLAST = TR
* 906 *       IF( INILZE .LT. 4 )  RETURN
* 907 *       IF ( (IDAY .NE. 7) .OR. (IMO .NE. 7) ) RETURN
* 908 *       PRINT 1, IMO, IDAY, IHR, TC, TH, TR
* 909 *  1    FORMAT( ' sfn1   -- IMO, IDAY, IHR=',3f3.0,' TC=',f7.2,
* 910 *      1        ' TH=',f7.2,' TR=',f7.2 )
* 911 *       END
```

---------- S Y M B O L T A B L E ----------

```
IDAY     (GLOBAL)      IHR      (GLOBAL)      IMO      (GLOBAL)      INILZE   (GLOBAL)      TC       (GLOBAL)
TH       (GLOBAL)      TR       (GLOBAL)      TRLAST   (GLOBAL)
```

```
* 912 * END-FUNCTION ..
* 913 *
* 914 * COMPUTE SYSTEMS  ..
* 915 * INPUT PLANT  ..
```

P D L P R O C E S S O R I N P U T D A T A

Wed Nov 10 15:17:48 1993PDL RUN 2

```
* 916 * PLANT-REPORT  SUMMARY (PS-A,PS-D,BEPS)  ..
* 917 * PLANT1 = PLANT-ASSIGNMENT  ..
* 918 *
* 919 *                    $ PLANT DESCRIPTION
* 920 *
* 921 * $ THIS PLANT IS SERVED BY A DIRECT-FIRED ABSORPTION CHILLER/HWG COMBINATION
* 922 * $ UNIT WHERE THE CAPACITY OF THE HWG IS SET TO THE CAPACITY OF THE CHILLER,
* 923 * $ WHICH IS THE GREATER OF THE TWO REQUIREMENTS.  OTHERWISE A HWG WOULD HAVE
* 924 * $ BEEN REQUIRED TO SUPPLEMENT THE CHLR/HTR.  A DOMESTIC HOT WATER HEATER IS
* 925 * $ ALSO REQUIRED.
* 926 *
* 927 * CHL  = PLANT-EQUIPMENT  TYPE=ABSORG-CHLR  SIZE -999  I-N 1  ..
* 928 * DHW  = PLANT-EQUIPMENT  TYPE=DHW-HEATER  SIZE -999  I-N 1  ..
* 929 * CTR  = PLANT-EQUIPMENT  TYPE=COOLING-TWR  SIZE -999   ..
* 930 *
* 931 * END  ..
* 932 * COMPUTE PLANT  ..
* 933 *
* 934 * INPUT ECONOMICS  ..
```

```
* 935 * DIAGNOSTIC WARNINGS ..
* 936 * ECONOMICS-REPORT  SUMMARY (ES-D,ES-E)  ..
* 937 *
* 938 *                    $  ENERGY CHARGE DESCRIPTION
* 939 *
* 940 * $ THIS RATE STRUCTURE IS A TYPICAL SMALL COMMERCIAL TIME OF DAY TYPE WITH AND
* 941 * $ INVERTED RATE.  IN OTHER WORDS ENERGY COSTS INCREASE AS CONSUMPTION RISES.
* 942 * $ THERE IS A BASE CHARGE OF 2 CENTS/KWH PLUS A FIXED MONTHLY CHARGE OF 200
* 943 * $ DOLLARS.  ON TOP OF THESE CHARGES FALL THE KWH/KW ENERGY CHARGE FOR EACH
* 944 * $ SEASON.  THERE IS A LIMITATION OF 15000 KWHS FOR THE FIRST BLOCK.
* 945 * $ NATURAL GAS IS A FLAT RATE OF 60 CENTS PER THERM.
* 946 *
* 947 * ELEC-COST  = UTILITY-RATE   RESOURCE = ELECTRICITY
* 948 *                            MONTH-CHGS (200)
* 949 *                            BLOCK-CHARGES = (WIN-OFF-P,WIN-ON-P,
* 950 *                                             SUM-OFF-P,SUM-ON-P)
* 951 *                            ENERGY-CHG  = .02  ..
* 952 *
* 953 * WIN-OFF-P  = BLOCK-CHARGE   BLOCK-SCH   = TOU-CHGS
* 954 *                            SCH-FLAG    = 1.1
* 955 *                            BLOCK1-TYPE = KWH/KW
* 956 *                            BLOCK1-DATA = (200,.025,15000,
* 957 *                                              1,.035,0)  ..
* 958 * WIN-ON-P   = BLOCK-CHARGE   BLOCK-SCH   = TOU-CHGS
* 959 *                            SCH-FLAG    = 1.2
* 960 *                            BLOCK1-TYPE = KWH/KW
* 961 *                            BLOCK1-DATA = (200,.040,15000,
* 962 *                                              1,.050,0)  ..
* 963 * SUM-OFF-P  = BLOCK-CHARGE   BLOCK-SCH   = TOU-CHGS
* 964 *                            SCH-FLAG    = 2.1
* 965 *                            BLOCK1-TYPE = KWH/KW
* 966 *                            BLOCK1-DATA = (200,.025,15000,
* 967 *                                              1,.035,0)  ..
* 968 * SUM-ON-P   = BLOCK-CHARGE   BLOCK-SCH   = TOU-CHGS
* 969 *                            SCH-FLAG    = 2.2
* 970 *                            BLOCK1-TYPE = KWH/KW
* 971 *                            BLOCK1-DATA = (150,.045,15000,
* 972 *                                              1,.055,0)  ..
* 973 * TOU-CHGS   = SCHEDULE  THRU MAY 15 (ALL)(1,12)(1.1)
* 974 *                                       (13,17)(1.2)
* 975 *                                       (18,24)(1.1)
* 976 *                       THRU OCT 20 (ALL)(1,12)(2.1)
* 977 *                                       (13,18)(2.2)
* 978 *                                       (19,24)(2.1)
* 979 *                       THRU DEC 31 (ALL)(1,12)(1.1)
* 980 *                                       (13,17)(1.2)
* 981 *                                       (18,24)(1.1)  ..
* 982 *
* 983 * GAS-COST   = UTILITY-RATE   RESOURCE = NATURAL-GAS
* 984 *                            ENERGY-CHG = .60  ..
* 985 * END  ..
* 986 * COMPUTE ECONOMICS  ..
* 987 * INPUT LOADS  ..
```

OFFICE BUILDING & FLOWER SHOP, CHICAGO VAV SYSTEM IN OFFICE & SZRH IN SHOP DOE-2.1E-001 Wed Nov 10 15:17:48 1993LDL RUN 2
DIRECT FIRED ABSORPTION W/ HWG SAMP3.INP RUN 2
REPORT- LS-D BUILDING MONTHLY LOADS SUMMARY WEATHER FILE- TRY CHICAGO

	COOLING						HEATING						ELEC	
MONTH	COOLING ENERGY (MBTU)	TIME OF MAX DY	TIME OF MAX HR	DRY-BULB TEMP	WET-BULB TEMP	MAXIMUM COOLING LOAD (KBTU/HR)	HEATING ENERGY (MBTU)	TIME OF MAX DY	TIME OF MAX HR	DRY-BULB TEMP	WET-BULB TEMP	MAXIMUM HEATING LOAD (KBTU/HR)	ELEC-TRICAL ENERGY (KWH)	MAXIMUM ELEC LOAD (KW)
JAN	6.53487	25	16	48.F	42.F	160.330	-104.325	1	7	-1.F	-1.F	-384.918	24148.	64.998
FEB	8.31394	9	16	23.F	19.F	156.275	-87.265	4	6	7.F	6.F	-352.845	21865.	64.998
MAR	22.44304	2	17	71.F	60.F	199.429	-54.049	24	6	8.F	7.F	-334.236	24734.	64.998
APR	65.98293	27	16	84.F	61.F	392.264	-20.141	8	5	33.F	30.F	-227.469	24212.	64.998
MAY	95.57850	20	15	77.F	68.F	400.208	-6.552	9	5	40.F	38.F	-122.989	24148.	64.998
JUN	141.09129	4	15	85.F	67.F	461.995	-0.405	24	4	55.F	49.F	-22.741	23806.	64.998
JUL	190.04869	9	17	97.F	73.F	500.535	0.000	6	4	60.F	54.F	-0.274	24639.	64.998
AUG	166.02115	20	15	88.F	72.F	473.787	-0.017	5	5	55.F	54.F	-10.250	24649.	64.998
SEP	99.29288	11	16	86.F	72.F	426.397	-3.526	22	6	35.F	31.F	-96.994	23316.	64.998
OCT	57.07592	5	15	74.F	62.F	328.327	-15.240	21	5	30.F	29.F	-158.468	24148.	64.998
NOV	22.53262	2	15	75.F	61.F	315.734	-52.045	15	6	28.F	26.F	-271.512	23231.	64.998
DEC	5.56734	10	15	41.F	35.F	146.075	-90.844	9	6	14.F	13.F	-298.005	23753.	64.998
TOTAL	880.483						-434.409						286650.	
MAX						500.535						-384.918		64.998

```
sfn0   -- IMO, IDAY, IHR= 7. 7. 1. TC=   0.00 TH=   0.00 TR=   0.00
sfn1   -- IMO, IDAY, IHR= 7. 7. 1. TC=   0.00 TH=   0.00 TR=   0.00

sfn0   -- IMO, IDAY, IHR= 7. 7. 2. TC=   0.00 TH=   0.00 TR=   0.00
sfn1   -- IMO, IDAY, IHR= 7. 7. 2. TC=   0.00 TH=   0.00 TR=   0.00

sfn0   -- IMO, IDAY, IHR= 7. 7. 3. TC=   0.00 TH=   0.00 TR=   0.00
sfn1   -- IMO, IDAY, IHR= 7. 7. 3. TC=   0.00 TH=   0.00 TR=   0.00

sfn0   -- IMO, IDAY, IHR= 7. 7. 4. TC=   0.00 TH=   0.00 TR=   0.00
sfn1   -- IMO, IDAY, IHR= 7. 7. 4. TC=   0.00 TH=   0.00 TR=   0.00

sfn0   -- IMO, IDAY, IHR= 7. 7. 5. TC=   0.00 TH=   0.00 TR=   0.00
sfn1   -- IMO, IDAY, IHR= 7. 7. 5. TC=   0.00 TH=   0.00 TR=   0.00

sfn0   -- IMO, IDAY, IHR= 7. 7. 6. TC=   0.00 TH=   0.00 TR=   0.00
sfn1   -- IMO, IDAY, IHR= 7. 7. 6. TC=   0.00 TH=   0.00 TR=   0.00

sfn0   -- IMO, IDAY, IHR= 7. 7. 7. TC=   0.00 TH=   0.00 TR=   0.00
dktempF-- IMO, IDAY, IHR= 7. 7. 7. TC=  57.18 TH=  57.18 TRLAST=   0.00
```

```
sfn1   -- IMO, IDAY, IHR= 7. 7. 7. TC=  54.66 TH=  57.18 TR=  78.65
dktempF-- IMO, IDAY, IHR= 7. 7. 7. TC=  62.00 TH=  62.00 TRLAST=   0.00

sfn0   -- IMO, IDAY, IHR= 7. 7. 8. TC=   0.00 TH=   0.00 TR=   0.00
sfn1   -- IMO, IDAY, IHR= 7. 7. 8. TC=   0.00 TH=   0.00 TR=   0.00

sfn0   -- IMO, IDAY, IHR= 7. 7. 9. TC=   0.00 TH=   0.00 TR=   0.00
dktempF-- IMO, IDAY, IHR= 7. 7. 9. TC=  57.90 TH=  57.90 TRLAST=   0.00
sfn1   -- IMO, IDAY, IHR= 7. 7. 9. TC=  55.37 TH=  57.90 TR=  78.60
dktempF-- IMO, IDAY, IHR= 7. 7. 9. TC=  62.00 TH=  62.00 TRLAST=   0.00

sfn0   -- IMO, IDAY, IHR= 7. 7.10. TC=   0.00 TH=   0.00 TR=   0.00
dktempF-- IMO, IDAY, IHR= 7. 7.10. TC=  57.22 TH=  57.22 TRLAST=  78.60
                              new TC=  52.79
sfn1   -- IMO, IDAY, IHR= 7. 7.10. TC=  50.26 TH=  57.22 TR=  74.63
dktempF-- IMO, IDAY, IHR= 7. 7.10. TC=  60.73 TH=  60.73 TRLAST=   0.00

sfn0   -- IMO, IDAY, IHR= 7. 7.11. TC=   0.00 TH=   0.00 TR=   0.00
dktempF-- IMO, IDAY, IHR= 7. 7.11. TC=  57.78 TH=  57.78 TRLAST=  74.63
                              new TC=  60.74
sfn1   -- IMO, IDAY, IHR= 7. 7.11. TC=  58.22 TH=  57.78 TR=  75.58
dktempF-- IMO, IDAY, IHR= 7. 7.11. TC=  60.83 TH=  60.83 TRLAST=   0.00

sfn0   -- IMO, IDAY, IHR= 7. 7.12. TC=   0.00 TH=   0.00 TR=   0.00
dktempF-- IMO, IDAY, IHR= 7. 7.12. TC=  56.94 TH=  56.94 TRLAST=  75.58
                              new TC=  58.84
sfn1   -- IMO, IDAY, IHR= 7. 7.12. TC=  56.30 TH=  56.94 TR=  76.69
dktempF-- IMO, IDAY, IHR= 7. 7.12. TC=  60.73 TH=  60.73 TRLAST=   0.00

sfn0   -- IMO, IDAY, IHR= 7. 7.13. TC=   0.00 TH=   0.00 TR=   0.00
dktempF-- IMO, IDAY, IHR= 7. 7.13. TC=  56.64 TH=  56.64 TRLAST=  76.69
                              new TC=  56.61
sfn1   -- IMO, IDAY, IHR= 7. 7.13. TC=  54.07 TH=  56.64 TR=  76.19
dktempF-- IMO, IDAY, IHR= 7. 7.13. TC=  60.68 TH=  60.68 TRLAST=   0.00

sfn0   -- IMO, IDAY, IHR= 7. 7.14. TC=   0.00 TH=   0.00 TR=   0.00
dktempF-- IMO, IDAY, IHR= 7. 7.14. TC=  56.95 TH=  56.95 TRLAST=  76.19
                              new TC=  57.61
sfn1   -- IMO, IDAY, IHR= 7. 7.14. TC=  55.06 TH=  56.95 TR=  76.33
dktempF-- IMO, IDAY, IHR= 7. 7.14. TC=  60.66 TH=  60.66 TRLAST=   0.00

sfn0   -- IMO, IDAY, IHR= 7. 7.15. TC=   0.00 TH=   0.00 TR=   0.00
dktempF-- IMO, IDAY, IHR= 7. 7.15. TC=  56.80 TH=  56.80 TRLAST=  76.33
                              new TC=  57.34
sfn1   -- IMO, IDAY, IHR= 7. 7.15. TC=  54.78 TH=  56.80 TR=  76.60
dktempF-- IMO, IDAY, IHR= 7. 7.15. TC=  60.71 TH=  60.71 TRLAST=   0.00

sfn0   -- IMO, IDAY, IHR= 7. 7.16. TC=   0.00 TH=   0.00 TR=   0.00
dktempF-- IMO, IDAY, IHR= 7. 7.16. TC=  56.83 TH=  56.83 TRLAST=  76.60
                              new TC=  56.80
sfn1   -- IMO, IDAY, IHR= 7. 7.16. TC=  54.24 TH=  56.83 TR=  76.19
dktempF-- IMO, IDAY, IHR= 7. 7.16. TC=  60.73 TH=  60.73 TRLAST=   0.00

sfn0   -- IMO, IDAY, IHR= 7. 7.17. TC=   0.00 TH=   0.00 TR=   0.00
dktempF-- IMO, IDAY, IHR= 7. 7.17. TC=  56.97 TH=  56.97 TRLAST=  76.19
                              new TC=  57.63
sfn1   -- IMO, IDAY, IHR= 7. 7.17. TC=  55.08 TH=  56.97 TR=  76.04
dktempF-- IMO, IDAY, IHR= 7. 7.17. TC=  60.63 TH=  60.63 TRLAST=   0.00

sfn0   -- IMO, IDAY, IHR= 7. 7.18. TC=   0.00 TH=   0.00 TR=   0.00
dktempF-- IMO, IDAY, IHR= 7. 7.18. TC=  56.81 TH=  56.81 TRLAST=  76.04
                              new TC=  57.92
sfn1   -- IMO, IDAY, IHR= 7. 7.18. TC=  55.37 TH=  56.81 TR=  76.09
dktempF-- IMO, IDAY, IHR= 7. 7.18. TC=  60.65 TH=  60.65 TRLAST=   0.00
```

```
sfn0   -- IMO, IDAY, IHR= 7. 7.19. TC=   0.00 TH=   0.00 TR=   0.00
dktempF-- IMO, IDAY, IHR= 7. 7.19. TC=  56.77 TH=  56.77 TRLAST=  76.09
                                new TC=  57.82
sfn1   -- IMO, IDAY, IHR= 7. 7.19. TC=  55.27 TH=  56.77 TR=  75.68
dktempF-- IMO, IDAY, IHR= 7. 7.19. TC=  60.60 TH=  60.60 TRLAST=   0.00

sfn0   -- IMO, IDAY, IHR= 7. 7.20. TC=   0.00 TH=   0.00 TR=   0.00
dktempF-- IMO, IDAY, IHR= 7. 7.20. TC=  56.71 TH=  56.71 TRLAST=  75.68
                                new TC=  58.63
sfn1   -- IMO, IDAY, IHR= 7. 7.20. TC=  56.09 TH=  56.71 TR=  75.40
dktempF-- IMO, IDAY, IHR= 7. 7.20. TC=  60.39 TH=  60.39 TRLAST=   0.00

sfn0   -- IMO, IDAY, IHR= 7. 7.21. TC=   0.00 TH=   0.00 TR=   0.00
sfn1   -- IMO, IDAY, IHR= 7. 7.21. TC=   0.00 TH=   0.00 TR=   0.00

sfn0   -- IMO, IDAY, IHR= 7. 7.22. TC=   0.00 TH=   0.00 TR=   0.00
sfn1   -- IMO, IDAY, IHR= 7. 7.22. TC=   0.00 TH=   0.00 TR=   0.00

sfn0   -- IMO, IDAY, IHR= 7. 7.23. TC=   0.00 TH=   0.00 TR=   0.00
sfn1   -- IMO, IDAY, IHR= 7. 7.23. TC=   0.00 TH=   0.00 TR=   0.00

sfn0   -- IMO, IDAY, IHR= 7. 7.24. TC=   0.00 TH=   0.00 TR=   0.00
sfn1   -- IMO, IDAY, IHR= 7. 7.24. TC=   0.00 TH=   0.00 TR=   0.00
```

OFFICE BUILDING & FLOWER SHOP, CHICAGO VAV SYSTEM IN OFFICE & SZRH IN SHOP DOE-2.1E-001 Wed Nov 10 15:17:48 1993SDL RUN 2
DIRECT FIRED ABSORPTION W/ HWG SAMP3.INP RUN 2
REPORT- SV-A SYSTEM DESIGN PARAMETERS FS-SYS WEATHER FILE- TRY CHICAGO

SYSTEM NAME	SYSTEM TYPE	ALTITUDE MULTIPLIER	FLOOR AREA (SQFT)	MAX PEOPLE
FS-SYS	RHFS	1.020	4800.0	12.

SUPPLY FAN (CFM)	ELEC (KW)	DELTA-T (F)	RETURN FAN (CFM)	ELEC (KW)	DELTA-T (F)	OUTSIDE AIR RATIO	COOLING CAPACITY (KBTU/HR)	SENSIBLE (SHR)	HEATING CAPACITY (KBTU/HR)	COOLING EIR (BTU/BTU)	HEATING EIR (BTU/BTU)
5446.	4.178	2.4	0.	0.000	0.0	0.249	206.240	0.687	0.000	-0.00	0.37

ZONE NAME	SUPPLY FLOW (CFM)	EXHAUST FLOW (CFM)	FAN (KW)	MINIMUM FLOW RATIO	OUTSIDE AIR FLOW (CFM)	COOLING CAPACITY (KBTU/HR)	SENSIBLE (SHR)	EXTRACTION RATE (KBTU/HR)	HEATING CAPACITY (KBTU/HR)	ADDITION RATE (KBTU/HR)	MULTIPLIER
ATZ1	2903.	0.	0.000	1.000	678.	0.00	0.00	59.57	-156.76	-87.78	1.0
ATZ2	2543.	0.	0.000	1.000	678.	0.00	0.00	52.19	-137.35	-76.91	1.0
EQUIP-RM	0.	0.	0.000	0.000	0.	0.00	0.00	0.00	0.00	0.00	1.0

SYSTEM NAME	SYSTEM TYPE	ALTITUDE MULTIPLIER	FLOOR AREA (SQFT)	MAX PEOPLE
OFF-SYS	VAVS	1.020	23320.0	180.

SUPPLY FAN (CFM)	ELEC (KW)	DELTA-T (F)	RETURN FAN (CFM)	ELEC (KW)	DELTA-T (F)	OUTSIDE AIR RATIO	COOLING CAPACITY (KBTU/HR)	SENSIBLE (SHR)	HEATING CAPACITY (KBTU/HR)	COOLING EIR (BTU/BTU)	HEATING EIR (BTU/BTU)
30014.	31.397	3.3	0.	0.000	0.0	0.092	808.055	0.837	-941.658	0.00	0.37

ZONE NAME	SUPPLY FLOW (CFM)	EXHAUST FLOW (CFM)	FAN (KW)	MINIMUM FLOW RATIO	OUTSIDE AIR FLOW (CFM)	COOLING CAPACITY (KBTU/HR)	SENSIBLE (SHR)	EXTRACTION RATE (KBTU/HR)	HEATING CAPACITY (KBTU/HR)	ADDITION RATE (KBTU/HR)	MULTIPLIER
BZ1	5163.	0.	0.000	0.300	306.	0.00	0.00	78.06	-306.65	-256.47	1.0
BZ2	1763.	0.	0.000	0.300	153.	0.00	0.00	26.66	-104.74	-87.60	1.0
BZ3	4903.	0.	0.000	0.300	306.	0.00	0.00	74.14	-291.26	-243.60	1.0
TZ1	5735.	0.	0.000	0.300	306.	0.00	0.00	86.71	-340.65	-284.91	1.0
TZ2	1949.	0.	0.000	0.300	153.	0.00	0.00	29.46	-115.75	-96.81	1.0
TZ3	5147.	0.	0.000	0.300	306.	0.00	0.00	77.82	-305.73	-255.70	1.0
IZ1	2677.	0.	0.000	0.300	612.	0.00	0.00	40.48	-159.03	-133.01	1.0
IZ2	2677.	0.	0.000	0.300	612.	0.00	0.00	40.48	-159.03	-133.01	1.0

OFFICE BUILDING & FLOWER SHOP, CHICAGO VAV SYSTEM IN OFFICE & SZRH IN SHOP DOE-2.1E-001 Wed Nov 10 15:17:48 1993SDL RUN 2
DIRECT FIRED ABSORPTION W/ HWG SAMP3.INP RUN 2
REPORT- SS-D PLANT MONTHLY LOADS SUMMARY FOR PLANT1 WEATHER FILE- TRY CHICAGO

	COOLING						HEATING						ELEC	
MONTH	COOLING ENERGY (MBTU)	TIME OF MAX DY	TIME OF MAX HR	DRY-BULB TEMP	WET-BULB TEMP	MAXIMUM COOLING LOAD (KBTU/HR)	HEATING ENERGY (MBTU)	TIME OF MAX DY	TIME OF MAX HR	DRY-BULB TEMP	WET-BULB TEMP	MAXIMUM HEATING LOAD (KBTU/HR)	ELEC-TRICAL ENERGY (KWH)	MAXIMUM ELEC LOAD (KW)
JAN	6.47297	18	8	34.F	34.F	135.727	-158.150	2	8	4.F	3.F	-1010.874	27112.	73.337
FEB	5.88716	8	8	7.F	6.F	154.133	-128.487	8	8	7.F	6.F	-955.868	24498.	73.207
MAR	7.28078	3	15	76.F	65.F	247.892	-88.475	24	8	6.F	5.F	-808.530	27395.	72.836
APR	27.41310	27	17	84.F	61.F	451.022	-24.973	8	8	31.F	28.F	-581.795	26815.	75.146
MAY	35.59666	21	13	87.F	76.F	694.810	-5.386	10	8	42.F	40.F	-307.682	27141.	83.354
JUN	125.21108	21	16	82.F	72.F	827.989	-0.044	23	21	56.F	48.F	-17.801	29037.	96.402
JUL	216.83882	19	12	88.F	74.F	917.409	0.000					0.000	32227.	98.037
AUG	179.60645	16	11	79.F	72.F	893.769	0.000					0.000	31000.	98.293
SEP	59.81257	11	16	86.F	72.F	687.119	-2.724	23	8	36.F	34.F	-168.696	26608.	85.501
OCT	18.27893	30	15	76.F	67.F	321.031	-19.526	21	8	30.F	29.F	-457.006	26484.	73.532
NOV	10.53428	1	16	72.F	59.F	364.475	-78.558	26	8	25.F	22.F	-771.863	25760.	76.410
DEC	5.15307	6	8	36.F	33.F	134.400	-131.351	25	8	20.F	19.F	-858.312	26483.	72.996
TOTAL	698.087						-637.675						330556.	
MAX						917.409						-1010.874		98.293

MAXIMUM DAILY INTEGRATED COOLING LOAD (DES DAY) 0.000 (KBTU)
MAXIMUM DAILY INTEGRATED COOLING LOAD (WTH FILE) 11798.153 (KBTU)

	COOLING						HEATING						ELEC	
MONTH	COOLING ENERGY (MBTU)	TIME OF MAX DY	TIME OF MAX HR	DRY-BULB TEMP	WET-BULB TEMP	MAXIMUM COOLING LOAD (KBTU/HR)	HEATING ENERGY (MBTU)	TIME OF MAX DY	TIME OF MAX HR	DRY-BULB TEMP	WET-BULB TEMP	MAXIMUM HEATING LOAD (KBTU/HR)	ELEC-TRICAL ENERGY (KWH)	MAXIMUM ELEC LOAD (KW)
JAN	0.00000					0.000	-38.399	4	8	2.F	2.F	-268.052	7735.	16.706
FEB	0.00000					0.000	-29.289	8	8	7.F	6.F	-243.957	6991.	16.706
MAR	1.09500	3	15	76.F	65.F	92.816	-20.745	24	8	6.F	5.F	-214.600	7760.	16.706
APR	7.60837	28	10	67.F	62.F	135.049	-7.760	8	8	31.F	28.F	-163.310	7433.	16.706
MAY	9.05042	21	13	87.F	76.F	176.434	-2.021	10	8	42.F	40.F	-133.122	7401.	16.706
JUN	28.67369	21	18	83.F	73.F	179.473	0.000					0.000	7475.	16.706
JUL	49.28604	19	9	79.F	72.F	241.875	0.000					0.000	7594.	16.706
AUG	42.89882	9	8	67.F	66.F	207.568	0.000					0.000	7613.	16.706
SEP	15.29998	11	16	86.F	72.F	168.241	0.000					0.000	7286.	16.706
OCT	5.03324	30	10	63.F	62.F	120.714	-3.025	21	8	30.F	29.F	-152.072	7409.	16.706
NOV	2.03662	2	13	74.F	61.F	114.174	-17.735	26	8	25.F	22.F	-190.184	7251.	16.706
DEC	0.00000					0.000	-30.388	25	8	20.F	19.F	-217.818	7599.	16.706
TOTAL	160.982						-149.362						89541.	
MAX						241.875						-268.052		16.706

	-----COOLING-----				---HEATING---			DAY COOLING PEAK			
	JUL 19				JAN 4			JUL 19			
HOUR	HOURLY COOLING LOAD (KBTU)	SENSIBLE HEAT RATIO	DRY-BULB TEMP	WET-BULB TEMP	HOURLY HEATING LOAD (KBTU)	DRY-BULB TEMP	WET-BULB TEMP	HOURLY COOLING LOAD (KBTU)	SENSIBLE HEAT RATIO	DRY-BULB TEMP	WET-BULB TEMP
1	0.000	0.000	79.F	72.F	-165.847	6.F	6.F	0.000	0.000	79.F	72.F
2	0.000	0.000	79.F	72.F	0.000	5.F	5.F	0.000	0.000	79.F	72.F
3	0.000	0.000	78.F	72.F	-168.792	4.F	4.F	0.000	0.000	78.F	72.F
4	0.000	0.000	78.F	72.F	0.000	4.F	4.F	0.000	0.000	78.F	72.F
5	0.000	0.000	77.F	72.F	-171.086	3.F	3.F	0.000	0.000	77.F	72.F
6	0.000	0.000	78.F	72.F	0.000	3.F	3.F	0.000	0.000	78.F	72.F
7	185.909	0.782	77.F	72.F	-169.125	2.F	2.F	185.909	0.782	77.F	72.F
8	241.875	0.837	79.F	72.F	-268.052	2.F	2.F	241.875	0.837	79.F	72.F
9	150.501	0.791	82.F	72.F	0.000	4.F	3.F	150.501	0.791	82.F	72.F
10	171.847	0.780	85.F	73.F	-189.989	7.F	6.F	171.847	0.780	85.F	73.F
11	204.175	0.803	88.F	74.F	-115.248	11.F	9.F	204.175	0.803	88.F	74.F
12	193.439	0.806	89.F	74.F	-86.085	16.F	13.F	193.439	0.806	89.F	74.F
13	198.534	0.788	90.F	75.F	-58.999	18.F	15.F	198.534	0.788	90.F	75.F
14	201.486	0.784	89.F	75.F	-49.158	20.F	16.F	201.486	0.784	89.F	75.F
15	198.887	0.788	90.F	75.F	-42.409	20.F	16.F	198.887	0.788	90.F	75.F
16	202.992	0.775	91.F	76.F	-49.308	20.F	16.F	202.992	0.775	91.F	76.F
17	195.315	0.787	90.F	75.F	-71.201	19.F	15.F	195.315	0.787	90.F	75.F
18	186.240	0.775	86.F	74.F	-81.570	16.F	13.F	186.240	0.775	86.F	74.F
19	182.536	0.773	86.F	74.F	-94.455	13.F	11.F	182.536	0.773	86.F	74.F
20	166.842	0.763	80.F	72.F	-100.243	11.F	9.F	166.842	0.763	80.F	72.F
21	0.000	0.000	79.F	72.F	-106.730	10.F	8.F	0.000	0.000	79.F	72.F
22	0.000	0.000	77.F	71.F	0.000	11.F	9.F	0.000	0.000	77.F	71.F
23	0.000	0.000	76.F	71.F	0.000	7.F	6.F	0.000	0.000	76.F	71.F
24	0.000	0.000	74.F	70.F	0.000	6.F	5.F	0.000	0.000	74.F	70.F
	---				---			---			
SUM								2680.579			
MAX	241.875				-268.052						

SYSTEM-TYPE	RHFS	SQFT/TON	238.1
COOLING PEAK	50.39 (BTU/HR- SQFT)	HEATING PEAK	-55.84 (BTU/HR- SQFT)
SUPPLY AIR PEAK FLOW	1.13 (CFM/SQFT)	MIN-OA/PERSON	113.05 (CFM)
OA FRAC AT CLG PEAK	0.249	OA FRAC AT HTG PEAK	0.249

* ASTERISKS INDICATE HOURS LOADS NOT MET

	COOLING						HEATING						ELEC	
MONTH	COOLING ENERGY (MBTU)	TIME OF MAX DY	TIME OF MAX HR	DRY-BULB TEMP	WET-BULB TEMP	MAXIMUM COOLING LOAD (KBTU/HR)	HEATING ENERGY (MBTU)	TIME OF MAX DY	TIME OF MAX HR	DRY-BULB TEMP	WET-BULB TEMP	MAXIMUM HEATING LOAD (KBTU/HR)	ELEC-TRICAL ENERGY (KWH)	MAXIMUM ELEC LOAD (KW)
JAN	6.47297	18	8	34.F	34.F	135.727	-119.751	2	8	4.F	3.F	-744.864	19377.	57.071
FEB	5.88716	8	8	7.F	6.F	154.133	-99.198	8	8	7.F	6.F	-711.911	17507.	56.501
MAR	6.18578	3	16	79.F	62.F	156.691	-67.731	24	8	6.F	5.F	-593.929	19635.	56.130
APR	19.80473	27	17	84.F	61.F	336.526	-17.213	8	8	31.F	28.F	-418.485	19382.	58.440
MAY	26.54624	21	13	87.F	76.F	518.376	-3.365	10	8	42.F	40.F	-174.560	19740.	66.648
JUN	96.53735	21	16	82.F	72.F	648.717	-0.044	23	21	56.F	48.F	-17.801	21562.	79.696
JUL	167.55283	19	12	88.F	74.F	713.234	0.000					0.000	24633.	81.331
AUG	136.70761	16	11	79.F	72.F	688.198	0.000					0.000	23387.	81.587
SEP	44.51254	11	16	86.F	72.F	518.878	-2.724	23	8	36.F	34.F	-168.696	19323.	68.795
OCT	13.24568	5	16	74.F	62.F	211.073	-16.501	20	8	42.F	36.F	-307.042	19075.	56.825
NOV	8.49765	1	16	72.F	59.F	257.496	-60.823	15	8	27.F	26.F	-588.034	18509.	59.704
DEC	5.15307	6	8	36.F	33.F	134.400	-100.963	25	8	20.F	19.F	-640.494	18884.	56.328
TOTAL	537.104						-488.313						241016.	
MAX						713.234						-744.864		81.587

	-----COOLING-----				---HEATING---			DAY COOLING PEAK			
	JUL 19				JAN 2			JUL 19			
HOUR	HOURLY COOLING LOAD (KBTU)	SENSIBLE HEAT RATIO	DRY-BULB TEMP	WET-BULB TEMP	HOURLY HEATING LOAD (KBTU)	DRY-BULB TEMP	WET-BULB TEMP	HOURLY COOLING LOAD (KBTU)	SENSIBLE HEAT RATIO	DRY-BULB TEMP	WET-BULB TEMP
1	0.000	0.000	79.F	72.F	0.000	1.F	0.F	0.000	0.000	79.F	72.F
2	0.000	0.000	79.F	72.F	-385.911	1.F	0.F	0.000	0.000	79.F	72.F
3	0.000	0.000	78.F	72.F	0.000	1.F	0.F	0.000	0.000	78.F	72.F
4	0.000	0.000	78.F	72.F	-393.807	2.F	1.F	0.000	0.000	78.F	72.F
5	0.000	0.000	77.F	72.F	0.000	2.F	1.F	0.000	0.000	77.F	72.F
6	0.000	0.000	78.F	72.F	-400.085	2.F	1.F	0.000	0.000	78.F	72.F
7	627.730 *	0.975	77.F	72.F	0.000	3.F	2.F	627.730 *	0.975	77.F	72.F
8	593.586 *	0.967	79.F	72.F	-744.864	4.F	3.F	593.586 *	0.967	79.F	72.F
9	694.163 *	0.861	82.F	72.F	0.000	4.F	3.F	694.163 *	0.861	82.F	72.F
10	704.871 *	0.863	85.F	73.F	-687.756	5.F	4.F	704.871 *	0.863	85.F	73.F
11	713.234 *	0.858	88.F	74.F	-603.659	6.F	5.F	713.234 *	0.858	88.F	74.F
12	681.856 *	0.872	89.F	74.F	-517.248	8.F	7.F	681.856 *	0.872	89.F	74.F
13	655.162 *	0.868	90.F	75.F	-480.878	9.F	9.F	655.162 *	0.868	90.F	75.F
14	691.558 *	0.850	89.F	75.F	-468.658	11.F	11.F	691.558 *	0.850	89.F	75.F
15	697.374 *	0.856	90.F	75.F	-432.760	12.F	12.F	697.374 *	0.856	90.F	75.F
16	681.689 *	0.849	91.F	76.F	-409.055	14.F	13.F	681.689 *	0.849	91.F	76.F
17	679.383	0.855	90.F	75.F	-380.839	15.F	14.F	679.383	0.855	90.F	75.F
18	610.759	0.856	86.F	74.F	-363.214	15.F	15.F	610.759	0.856	86.F	74.F
19	577.011	0.849	86.F	74.F	-371.009	17.F	16.F	577.011	0.849	86.F	74.F
20	509.164	0.840	80.F	72.F	-365.707	17.F	16.F	509.164	0.840	80.F	72.F
21	0.000	0.000	79.F	72.F	-346.082	18.F	18.F	0.000	0.000	79.F	72.F
22	0.000	0.000	77.F	71.F	0.000	17.F	17.F	0.000	0.000	77.F	71.F
23	0.000	0.000	76.F	71.F	0.000	17.F	17.F	0.000	0.000	76.F	71.F
24	0.000	0.000	74.F	70.F	0.000	17.F	17.F	0.000	0.000	74.F	70.F
	---				---			---			
SUM								9117.540			
MAX	713.234				-744.864						

SYSTEM-TYPE	VAVS	SQFT/TON	392.4
COOLING PEAK	30.58 (BTU/HR- SQFT)	HEATING PEAK	-31.94 (BTU/HR- SQFT)
SUPPLY AIR PEAK FLOW	1.29 (CFM/SQFT)	MIN-OA/PERSON	15.30 (CFM)
OA FRAC AT CLG PEAK	0.096	OA FRAC AT HTG PEAK	0.000

* ASTERISKS INDICATE HOURS LOADS NOT MET

EQUIPMENT	SIZE (MBTU/H)	NUMBER INSTD	NUMBER AVAIL	SIZE (MBTU/H)	NUMBER INSTD	NUMBER AVAIL	SIZE (MBTU/H)	NUMBER INSTD	NUMBER AVAIL	SIZE (MBTU/H)	NUMBER INSTD	NUMBER AVAIL	SIZE (MBTU/H)	NUMBER INSTD	NUMBER AVAIL	SIZE (MBTU/H)	NUMBER INSTD	NUMBER AVAIL
DHW-HEATER	0.069	1	1															
ABSORG-CHLR	0.936	1	1															
COOLING-TWR	1.892	1	1															

OFFICE BUILDING & FLOWER SHOP, CHICAGO VAV SYSTEM IN OFFICE & SZRH IN SHOP DOE-2.1E-001 Wed Nov 10 15:17:48 1993PDL RUN 2
DIRECT FIRED ABSORPTION W/ HWG SAMP3.INP RUN 2
REPORT- PS-A PLANT ENERGY UTILIZATION SUMMARY WEATHER FILE- TRY CHICAGO

	SITE ENERGY												SOURCE
	2	3	4	5	6	7	8	9	10	11	12	13	14
MONTH	TOTAL HEAT LOAD (MBTU)	TOTAL COOLING LOAD (MBTU)	TOTAL ELECTR LOAD (MWH)	RCVRED ENERGY (MBTU)	WASTED RCVRABL ENERGY (MBTU)	FUEL INPUT COOLING (MBTU)	ELEC INPUT COOLING (MWH)	FUEL INPUT HEATING (MBTU)	ELEC INPUT HEATING (MWH)	FUEL INPUT ELECT (MBTU)	TOTAL FUEL INPUT (MBTU)	TOTAL SITE ENERGY (MBTU)	TOTAL SOURCE ENERGY (MBTU)
JAN	178.4	8.0	28.4	0.0	0.0	14.2	1.6	204.0	0.5	0.0	218.3	317.9	517.1
FEB	147.2	7.2	25.6	0.0	0.0	12.6	1.4	169.0	0.4	0.0	181.6	271.3	450.7
MAR	109.0	8.5	28.5	0.0	0.0	13.0	1.3	127.1	0.4	0.0	140.1	239.5	438.2
APR	43.1	30.7	28.8	0.0	0.0	38.4	2.1	53.5	0.3	0.0	91.9	191.7	391.2
MAY	21.5	39.5	29.4	0.0	0.0	48.4	2.4	29.2	0.1	0.0	77.6	178.7	381.1
JUN	14.2	131.6	32.8	0.0	0.0	133.9	3.8	20.7	0.0	0.0	154.6	266.6	490.8
JUL	13.3	223.6	36.7	0.0	0.0	212.4	4.5	19.6	0.0	0.0	232.0	357.4	608.2
AUG	12.9	186.1	35.1	0.0	0.0	178.6	4.1	19.1	0.0	0.0	197.7	317.6	557.5
SEP	16.0	64.7	29.4	0.0	0.0	72.8	2.8	22.4	0.1	0.0	95.3	196.0	397.5
OCT	35.3	21.3	28.4	0.0	0.0	29.9	2.0	44.3	0.3	0.0	74.2	172.4	368.8
NOV	95.4	12.1	27.0	0.0	0.0	16.7	1.4	111.1	0.4	0.0	127.8	221.7	409.7
DEC	150.4	6.3	27.5	0.0	0.0	11.0	1.3	172.7	0.4	0.0	183.7	279.9	472.5
TOTAL	836.7	739.7	357.8	0.0	0.0	781.9	28.7	992.8	2.9	0.0	1774.8	3010.8	5483.2

HEATING LOADS	MBTU SUPPLIED	PCT OF TOTAL LOAD
DHW-HEATER	181.1	21.6
ABSORG-CHLR	655.6	78.4
LOAD SATISFIED	836.7	100.0
TOTAL LOAD ON PLANT	836.7	

COOLING LOADS	MBTU SUPPLIED	PCT OF TOTAL LOAD
ABSORG-CHLR	739.7	100.0
LOAD SATISFIED	739.7	100.0
TOTAL LOAD ON PLANT	739.7	

ELECTRICAL LOADS	KWH SUPPLIED	PCT OF TOTAL LOAD
ELECTRICITY	362157.2	101.2
LOAD SATISFIED	362157.1	101.2
TOTAL LOAD ON PLANT	357782.6	

TOWER ABOVE DESIGN TEMPERATURE OF 85.F 0 HOURS

SUMMARY OF LOADS MET

TYPE OF LOAD	TOTAL LOAD (MBTU)	LOAD SATISFIED (MBTU)	TOTAL OVERLOAD (MBTU)	PEAK OVERLOAD (MBTU)	HOURS OVERLOADED
HEATING LOADS	836.7	836.7	2.392	0.277	27
COOLING LOADS	739.7	739.7	0.000	0.000	0
ELECTRICAL LOADS	1221.1	1236.0	0.000	0.000	0

ENERGY TYPE:	ELECTRICITY	NATURAL-GAS
UNITS: MBTU		
CATEGORY OF USE		
AREA LIGHTS	522.7	0.0
MISC EQUIPMT	455.6	0.0
SPACE HEAT	0.0	728.4
SPACE COOL	28.7	781.9
HEAT REJECT	46.0	0.0
PUMPS & MISC	33.1	0.0
VENT FANS	149.9	0.0
DOMHOT WATER	0.0	264.4
TOTAL	1236.0	1774.8

TOTAL SITE ENERGY	3010.77 MBTU	111.8 KBTU/SQFT-YR GROSS-AREA	111.8 KBTU/SQFT-YR NET-AREA
TOTAL SOURCE ENERGY	5483.16 MBTU	203.7 KBTU/SQFT-YR GROSS-AREA	203.7 KBTU/SQFT-YR NET-AREA

PERCENT OF HOURS ANY SYSTEM ZONE OUTSIDE OF THROTTLING RANGE = 1.1
PERCENT OF HOURS ANY PLANT LOAD NOT SATISFIED = 0.3

NOTE: ENERGY IS APPORTIONED HOURLY TO ALL END-USE CATEGORIES.

OFFICE BUILDING & FLOWER SHOP, CHICAGO VAV SYSTEM IN OFFICE & SZRH IN SHOP DOE-2.1E-001 Wed Nov 10 15:17:48 1993EDL RUN 2
DIRECT FIRED ABSORPTION W/ HWG SAMP3.INP RUN 2
REPORT- ES-D ENERGY COST SUMMARY

UTILITY-RATE	RESOURCE	METERS	METERED ENERGY UNITS/YR	TOTAL CHARGE ($)	VIRTUAL RATE ($/UNIT)	RATE USED ALL YEAR?
ELEC-COST	ELECTRICITY	1 2 3 4 5	362157. KWH	21389.	0.0591	YES
GAS-COST	NATURAL-GAS	1 2 3 4 5	17748. THERM	10649.	0.6000	YES
				==========		
				32038.		

ENERGY COST/GROSS BLDG AREA: 1.19
ENERGY COST/NET BLDG AREA: 1.19

OFFICE BUILDING & FLOWER SHOP, CHICAGO VAV SYSTEM IN OFFICE & SZRH IN SHOP DOE-2.1E-001 Wed Nov 10 15:17:48 1993EDL RUN 2
DIRECT FIRED ABSORPTION W/ HWG SAMP3.INP RUN 2
REPORT- ES-E SUMMARY OF UTILITY-RATE: ELEC-COST

UTILITY-RATE: ELEC-COST

RESOURCE: ELECTRICITY
METERS: 1 2 3 4 5
POWER-FACTOR: 0.80

DEMAND-WINDOW: HOUR
BILLING-DAY: 31
EXCESS-KVAR-FRAC: 0.30

3413. BTU/KWH
RATE-LIMITATION: 0.0000
EXCESS-KVAR-CHG: 0.0000

RATE-QUALIFICATIONS

MIN-ENERGY:	0.0
MAX-ENERGY:	0.0
MIN-DEMAND:	0.0
MAX-DEMAND:	0.0
QUALIFY-RATE:	ALL-MONTHS
USE-MIN-QUAL:	NO

BLOCK-CHARGES

WIN-OFF-P
WIN-ON-P
SUM-OFF-P
SUM-ON-P

DEMAND-RATCHETS

MIN-MON-RATCHETS

MONTH	METERED ENERGY KWH	BILLING ENERGY KWH	METERED DEMAND KW	BILLING DEMAND KW	ENERGY CHARGE ($)	DEMAND CHARGE ($)	ENERGY CST ADJ ($)	TAXES ($)	SURCHRG ($)	FIXED CHARGE ($)	MINIMUM CHARGE ($)	VIRTUAL RATE ($/UNIT)	TOTAL CHARGE ($)
JAN	29186	29186	76.4	76.4	1498	0	0	0	0	200	0	0.0582	1698
FEB	26281	26281	76.3	76.3	1334	0	0	0	0	200	0	0.0584	1534
MAR	29116	29116	85.3	85.3	1496	0	0	0	0	200	0	0.0582	1696
APR	29222	29222	85.8	85.8	1503	0	0	0	0	200	0	0.0583	1703
MAY	29637	29637	96.1	96.1	1519	0	0	0	0	200	0	0.0580	1719
JUN	32831	32831	108.7	108.7	1785	0	0	0	0	200	0	0.0604	1985
JUL	36735	36735	112.2	112.2	2016	0	0	0	0	200	0	0.0603	2216
AUG	35129	35129	112.1	112.1	1921	0	0	0	0	200	0	0.0604	2121
SEP	29520	29520	97.1	97.1	1588	0	0	0	0	200	0	0.0606	1788
OCT	28768	28768	84.8	84.8	1482	0	0	0	0	200	0	0.0585	1682
NOV	27530	27530	86.8	86.8	1406	0	0	0	0	200	0	0.0583	1606
DEC	28201	28201	76.0	76.0	1443	0	0	0	0	200	0	0.0583	1643
TOTAL	362157	362157	112.2		18989	0	0	0	0	2400		0.0591	21389

OFFICE BUILDING & FLOWER SHOP, CHICAGO VAV SYSTEM IN OFFICE & SZRH IN SHOP DOE-2.1E-001 Wed Nov 10 15:17:48 1993EDL RUN 2
DIRECT FIRED ABSORPTION W/ HWG SAMP3.INP RUN 2
REPORT- ES-F BLOCK-CHARGE AND RATCHET SUMMARY FOR: ELEC-COST

UTILITY-RATE: ELEC-COST
RESOURCE: ELECTRICITY
ENERGY-UNITS: KWH
DEMAND-UNITS: KW
DEMAND-WINDOW: HOUR

BLOCK-CHARGES		JAN	FEB	MAR	APR	MAY	JUN	JUL	AUG	SEP	OCT	NOV	DEC	YEAR
WIN-OFF-P	USE: TIME-OF-USE													
	METERED ENERGY:	20636	18535	20233	20020	9864	0	0	0	0	7241	19174	19843	
	BILLING ENERGY:	20636	18535	20233	20020	9864	0	0	0	0	7241	19174	19843	135546
	KWH/KW DEMAND:	76.4	76.3	85.3	85.8	86.8	0.0	0.0	0.0	0.0	84.8	86.8	76.0	
	ENERGY CHGS($):	572	499	558	551	247	0	0	0	0	181	521	544	3673
WIN-ON-P	USE: TIME-OF-USE													
	METERED ENERGY:	8549	7746	8883	9202	4577	0	0	0	0	3422	8356	8359	
	BILLING ENERGY:	8549	7746	8883	9202	4577	0	0	0	0	3422	8356	8359	59095
	KWH/KW DEMAND:	72.0	71.9	80.5	83.7	82.2	0.0	0.0	0.0	0.0	81.7	83.7	71.9	
	ENERGY CHGS($):	342	310	355	368	183	0	0	0	0	137	334	334	2364
SUM-OFF-P	USE: TIME-OF-USE													
	METERED ENERGY:	0	0	0	0	9368	19945	22203	21279	18086	11313	0	0	
	BILLING ENERGY:	0	0	0	0	9368	19945	22203	21279	18086	11313	0	0	102194
	KWH/KW DEMAND:	0.0	0.0	0.0	0.0	96.1	108.7	112.2	112.1	97.1	84.7	0.0	0.0	
	ENERGY CHGS($):	0	0	0	0	234	548	627	595	483	283	0	0	2770
SUM-ON-P	USE: TIME-OF-USE													
	METERED ENERGY:	0	0	0	0	5829	12886	14532	13850	11433	6792	0	0	
	BILLING ENERGY:	0	0	0	0	5829	12886	14532	13850	11433	6792	0	0	65322
	KWH/KW DEMAND:	0.0	0.0	0.0	0.0	94.1	105.2	107.5	107.5	95.4	80.7	0.0	0.0	
	ENERGY CHGS($):	0	0	0	0	262	580	654	623	514	306	0	0	2940
	TOTAL ENERGY:	29186	26281	29116	29222	29637	32831	36735	35129	29520	28768	27530	28201	362157
	TOTAL CHARGES ($):	914	809	913	919	926	1128	1281	1218	998	906	855	879	11746

OFFICE BUILDING & FLOWER SHOP, CHICAGO VAV SYSTEM IN OFFICE & SZRH IN SHOP DOE-2.1E-001 Wed Nov 10 15:17:48 1993EDL RUN 2
DIRECT FIRED ABSORPTION W/ HWG SAMP3.INP RUN 2
REPORT- ES-E SUMMARY OF UTILITY-RATE: GAS-COST

UTILITY-RATE: GAS-COST
RESOURCE: NATURAL-GAS
METERS: 1 2 3 4 5
DEMAND-WINDOW: HOUR
BILLING-DAY: 31
100000. BTU/THERM
RATE-LIMITATION: 0.0000

RATE-QUALIFICATIONS

MIN-ENERGY: 0.0
MAX-ENERGY: 0.0
MIN-DEMAND: 0.0
MAX-DEMAND: 0.0
QUALIFY-RATE: ALL-MONTHS
USE-MIN-QUAL: NO

BLOCK-CHARGES

DEMAND-RATCHETS

MIN-MON-RATCHETS

MONTH	METERED ENERGY THERM	BILLING ENERGY THERM	METERED DEMAND THERMS	BILLING DEMAND THERMS	ENERGY CHARGE ($)	DEMAND CHARGE ($)	ENERGY CST ADJ ($)	TAXES ($)	SURCHRG ($)	FIXED CHARGE ($)	MINIMUM CHARGE ($)	VIRTUAL RATE ($/UNIT)	TOTAL CHARGE ($)
JAN	2183	2183	10.8	10.8	1310	0	0	0	0	0	0	0.6000	1310
FEB	1816	1816	10.5	10.5	1090	0	0	0	0	0	0	0.6000	1090
MAR	1401	1401	10.2	10.2	841	0	0	0	0	0	0	0.6000	841
APR	919	919	8.7	8.7	552	0	0	0	0	0	0	0.6000	552
MAY	776	776	7.5	7.5	466	0	0	0	0	0	0	0.6000	466
JUN	1546	1546	8.5	8.5	928	0	0	0	0	0	0	0.6000	928
JUL	2320	2320	9.5	9.5	1392	0	0	0	0	0	0	0.6000	1392
AUG	1977	1977	9.0	9.0	1186	0	0	0	0	0	0	0.6000	1186
SEP	953	953	7.1	7.1	572	0	0	0	0	0	0	0.6000	572
OCT	742	742	7.3	7.3	445	0	0	0	0	0	0	0.6000	445
NOV	1278	1278	10.5	10.5	767	0	0	0	0	0	0	0.6000	767
DEC	1837	1837	10.5	10.5	1102	0	0	0	0	0	0	0.6000	1102
TOTAL	17748	17748	10.8		10649	0	0	0	0	0		0.6000	10649

```
                L D L   P R O C E S S O R   I N P U T   D A T A

                     Wed Nov 10 15:17:48 1993LDL RUN  3


* 988 * TITLE LINE-1 * OFFICE BUILDING & DELI/RESTAURANT*
* 989 *       LINE-2 * ELECTROCHROMIC GLAZING IN ATRIUM *
* 990 *       LINE-3 * VAV SYSTEM IN OFFICE & PSZ IN ATRIUM *
* 991 *       LINE-4 * GAS ENGINE DRIVEN CHILLER & HEAT RECY*
* 992 *       LINE-5 * SAMP3.INP  RUN 3  *  ..
* 993 *
* 994 *                ABORT              ERRORS   ..
* 995 *                DIAGNOSTIC         WARNINGS    ..
* 996 *                RUN-PERIOD         JAN 1 1988  THRU  DEC 31 1988  ..
* 997 *                BUILDING-LOCATION  LATITUDE=42  LONGITUDE=88
* 998 *                                   TIME-ZONE=6  ALTITUDE=610 ..
* 999 *
*1000 *                LOADS-REPORT       SUMMARY=(LS-D) ..
*1001 *
*1002 *                     $ BUILDING DESCRIPTION
*1003 *
*1004 * $             THE MEDICAL OFFICE BUILDING ABOVE HAS BEEN REMODELED WITH
*1005 * $             DIFFERENT USAGES TO DEMONSTRATE NEW FEATURES OF DOE-2.1D and E.
*1006 *
*1007 * $ STRUCTURE   REINFORCED CONCRETE CONSTRUCTION WITH 4IN CONCRETE FLOORS AND ROOF
*1008 * $             10FT FLOOR TO FLOOR HEIGHT, TWO STORIES HIGH.  RETURN AIR PLENUMS
*1009 * $             ARE NOT DEFINED.
*1010 *
*1011 * $ WALLS       USING CODE WORDS FROM THE DOE-2 LIBRARY (REFERENCE MANUAL PART 2)
*1012 * $             AND STARTING WITH THE OUTSIDE SURFACE AND MOVING INWARD:
*1013 * $                2IN PRECAST CONCRETE PANEL (CC03); 2IN POLYSTRENE INSULATION
*1014 * $                R-8 (IN35); 3IN AIRSPACE (AL21); 5/8IN GYPSUM BOARD (GP04);
*1015 * $                3/4IN FINISH PLASTER.
*1016 *
*1017 * $ ATRIUM ROOF BUILT-UP ROOFING (BR01); 3IN ROOF INSULATION R-8 (IN76);
*1018 * $             6IN CONCRETE (CC04); INSIDE FILM RESISTANCE .76
*1019 *
*1020 * $ OFFICE ROOF BUILT-UP ROOFING (BR01); 3IN ROOF INSULATION R-8 (IN76);
*1021 * $             2 FT AIR SPACE (AL33); 3/4IN LAY-IN ACOUSTIC TILE (AC03);
*1022 * $             INSIDE-FILM-RESISTANCE .76.
*1023 *
*1024 * $ FLOORS      FIRST FL IS SLAB-ON-GRADE EFFECTIVE U-VALUE OF ENTIRE AREA .05.
*1025 *
*1026 * $ WINDOWS     OFFICE AREA 4FT HIGH AND FULL WIDTH OF EACH WALL, EXCEPT SOUTH
*1027 * $             WALL WHERE THERE ARE NO WINDOWS.  EXCEPT FOR ATRIUM, GLASS IS
*1028 * $             DOUBLE-PANE TINTED WITH A SOLAR TRANSMITTANCE OF 0.53.
*1029 * $
*1030 * $             ATRIUM GLAZING IS ELECTROCHROMIC, SWITCHING FROM CLEAR TO
*1031 * $             COLORED (TO REDUCE SOLAR GAIN) WHEN ATRIUM HAS A COOLING LOAD
*1032 * $             (AS DETERMINED BY THE LOADS PROGRAM) THE PREVIOUS HOUR.
*1033 * $             THERE ARE TWO MAIN SECTIONS OF GLASS 29' WIDE BY
*1034 * $             30' HIGH WITH NO OVERHANGS OR SIDE FINS.
*1035 *
*1036 * $ INTERIORS   CEILINGS ARE SIMULATED AS PART OF THE ROOF STRUCTURE ON THE TOP
*1037 * $             FLOOR.  PARTITIONS SIMULATE A GLASS WALL BETWEEN ATRIUM AND
*1038 * $             OFFICE SPACES, BUT WALLS BETWEEN INTERIOR AND EXTERIOR OFFICES
*1039 * $             ARE NOT DEFINED.  WALLS BETWEEN THE EQUIPMENT ROOM AND OFFICES
*1040 * $             HAVE A U-VALUE OF .28.
*1041 *
*1042 * $ SPACE LOADS LIGHTING IS RECESSED FLUORSCENT NON VENTED AT 1.5 WATTS/SQFT
*1043 * $             IN THE OFFICES AND 2.2 WATT/SQFT IN THE ATRIUM.
*1044 * $             PEOPLE IN OFFICES IS INPUT AT 150SQFT/PERSON.
```

```
*1045 * $              PEOPLE IN ATRIUM ARE ZERO.
*1046 * $              INFILTRATION IS SET AT .2 AIRCHANGES/HR WHEN FANS ARE OFF AND AT
*1047 * $              .1 AIRCHANGE WHEN FANS ARE ON.
*1048 * $              EQUIPMENT IN OFFICES IS SET AT 1 WATTS/SQFT AND 1.5 WATTS/SQFT
*1049 * $              IN THE ATRIUM.
*1050 *
*1051 *                        $ CONSTRUCTIONS
*1052 *
*1053 * ROOF-O         =LAYERS              MAT=(BR01,IN76,CC03,AL33,AC03)  I-F-R=.76 ..
*1054 * ROOF-A         =LAYERS              MAT=(BR01,IN76,CC04)  I-F-R .76  ..
*1055 * OFF-ROF        =CONSTRUCTION        LAYERS ROOF-O  ..
*1056 * ATR-ROF        =CONSTRUCTION        LAYERS ROOF-A  ..
*1057 * WALL-1         =LAYERS              MAT=(CC33,IN35,AL21,GP04,GP04)  ..
*1058 * WL1            =CONSTRUCTION        LAYERS=WALL-1  ..
*1059 * BW1            =CONSTRUCTION        U=.05 ..
*1060 * BW2            =CONSTRUCTION        U=.0001   ..
*1061 * WL2            =CONSTRUCTION        U=1.05   $ ATRIUM GLASS PARTITIONS $  ..
*1062 * WL3            =CONSTRUCTION        U=.28    $ INTERIOR PARTITIONS $  ..
*1063 *
*1064 *                     $ GLASS DESCRIPTION
*1065 *
*1066 * GT1            =GLASS-TYPE   GLASS-TYPE-CODE=5  PANES=2  ..
*1067 *
*1068 *                     $ GLASS TYPES FOR SWITCHABLE GLAZING IN ATRIUM WINDOWS
*1069 *
*1070 * ELECTRO-CLEAR =GLASS-TYPE   GLASS-TYPE-CODE=2800 .. $ ELECTROCHROMIC ABSORBIN,

      GLAZING SELECTED FROM WINDOW LIBRARY--
      TYPE: DOUBLE ELECTROCHROMIC ABSORBING IG BLEACHED AIR 6.3

      G-T-C  LAYERS  U-SI  U-IP    SC  SHCG  TSOL  TVIS  GAP(mm)  GAS-FILL
       2800       2  2.43  0.43  0.85  0.73  0.63  0.75      6.3  Air

*1071 *                                                  $ BLEACHED STATE
*1072 *                                                  $ SHADING COEF = .85
*1073 *
*1074 * ELECTRO-COLOR =GLASS-TYPE   GLASS-TYPE-CODE=2801 .. $ ELECTROCHROMIC ABSORBING,

      GLAZING SELECTED FROM WINDOW LIBRARY--
      TYPE: DOUBLE ELECTROCHROMIC ABSORBING IG COLORED AIR 6.3

      G-T-C  LAYERS  U-SI  U-IP    SC  SHCG  TSOL  TVIS  GAP(mm)  GAS-FILL
       2801       2  2.43  0.43  0.21  0.18  0.09  0.12      6.3  Air

*1075 *                                                  $ COLORED STATE
*1076 *                                                  $ SHADING COEF = .21
*1077 *
*1078 *                          $ The following command calls the file containing schedu
*1079 *                          $ for offices that is on the sample run input
*1080 *                          $ tape. It MUST reside in a directory on your
*1081 *                          $ computer system so that this demonstration
*1082 *                          $ of a GENERALIZED LIBRARY can function. For users
*1083 *                          $ with a large computer system the file name should
*1084 *                          $ include the full path name, or as an alternative
*1085 *                          $ use the @@fileprefix command.
 01086 0 @@include /u3/doe2/21d/dev/SAMPLES/officsch.inc
1    *   1 *
1    *   2 * $ This is a demonstration of how to use the GENERAL LIBRARY FEATURE.
1    *   3 * $ We have created a file of the OFFICE LOADS SCHEDULES from the MEDICAL BLDG
1    *   4 * $ BDL file and named it OFFICSCH.INP  We then called these same schedules
1    *   5 * $ using the term -  @@include officsch.inp -  in these two input files.
1    *   6 *
1    *   7 *                     $ OFFICE SCHEDULES
1    *   8 *
1    *   9 * OC1            =DAY-SCHEDULE        (1,9) (0)  (10,12) (1)  (13,14) (.8,.4)
```

```
1    *  10 *                                    (15,18) (.7)  (19,21) (.4)  (22,24) (.2)  ..
1    *  11 * OC2            =DAY-SCHEDULE       (1,24) (.2)  ..
1    *  12 * OCCUPANCY      =WEEK-SCHEDULE      (MON,TUE) OC1        (WED) OC2
1    *  13 *                                    (THU,SAT) OC1        (SUN,HOL) OC2  ..
1    *  14 * OCCUP          =SCHEDULE           THRU DEC 31 OCCUPANCY  ..
1    *  15 *
1    *  16 * L1             =DAY-SCHEDULE       (1,6) (.2)  (7,12) (.9)  (13,14) (.8,.4)
1    *  17 *                                    (15,18) (.7)  (19,21) (.4)  (22,24) (.2)  ..
1    *  18 * L2             =DAY-SCHEDULE       (1,24) (.2)  ..
1    *  19 * LIGHTS         =WEEK-SCHEDULE      (MON,TUE) L1         (WED) L2
1    *  20 *                                    (THU,SAT) L1         (SUN,HOL) L2 ..
1    *  21 * LT1            =SCHEDULE           THRU DEC 31 LIGHTS  ..
1    *  22 *
1    *  23 * ES1            =DAY-SCHEDULE       (1,9) (0)  (10,21) (.9)  (22,24) (.4)  ..
1    *  24 * ES2            =DAY-SCHEDULE       (1,9) (0)  (10,24) (.4)  ..
1    *  25 * EQUIPMENT      =WEEK-SCHEDULE      (MON,TUE) ES1        (WED) ES2
1    *  26 *                                    (THU,SAT) ES1        (SUN,HOL) ES2   ..
1    *  27 * EQ1            =SCHEDULE           THRU DEC 31 EQUIPMENT  ..
1    *  28 *
1    *  29 * I1             =DAY-SCHEDULE       (1,9) (1)  (10,21) (.5)  (22,24) (1)  ..
1    *  30 * INFILTRAT      =WEEK-SCHEDULE      (ALL) I1   ..
1    *  31 * INF1           =SCHEDULE           THRU DEC 31 INFILTRAT   ..
1    *  32 *
file : INPUT2.THP
     *1087 *
     *1088 *                    $ DELI/RESTAURANT SCHEDULES $
     *1089 *
     *1090 * OC4 = D-SCH (1,7) (0)  (8,11) (.1,.2,.5,.5)  (12,15) (.7)
     *1091 *             (16,21) (.8,.7,.5,.5,.3,.3)  (22,24) (0)  ..
     *1092 * OC5 = D-SCH (1,7) (0)  (8,11) (.1,.2,.5,.6)  (12,17) (.8)
     *1093 *             (18,22) (.6,.2,.2,.2,.1)  (23,24) (0)  ..
     *1094 * OC6 = D-SCH (1,24) (0)  ..
     *1095 * OCCUP2 = SCH THRU DEC 31 (WD) OC4 (SAT) OC5 (SUN,HOL) OC6  ..
     *1096 *
     *1097 * L4 = D-SCH (1,7) (0)  (8,9) (.2,.5)  (10,18) (.9)
     *1098 *            (19,24) (.6,.6,.5,.2,0,0)  ..
     *1099 * L5 = D-SCH (1,7) (0)  (8,10) (.1,.3,.6)  (11,18) (.9)
     *1100 *            (19,24) (.5,.3,.3,.1,0,0)  ..
     *1101 * L6 = D-SCH (1,24) (0)  ..
     *1102 * LIGHTS2 = SCH THRU DEC 31 (WD) L4 (SAT) L5 (SUN,HOL) L6  ..
     *1103 *
     *1104 * IF4 = D-SCH (1,6) (1)  (7,21) (0)  (22,24) (1)  ..
     *1105 * IF5 = D-SCH (1,6) (1)  (7,22) (0)  (23,24) (1)  ..
     *1106 * IF6 = D-SCH (1,24) (1) ..
     *1107 * INFIL = SCH THRU DEC 31 (WD) IF4 (SAT) IF5 (SUN,HOL) IF6  ..
     *1108 *
     *1109 * EQ2   = SCH THRU DEC 31 (ALL) (1,24) (1) ..  $ REFRIGERATOR COMPRESSOR HEAT
     *1110 *                                              $ REJECTED TO SPACE
     *1111 *
     *1112 *                  $ SET DEFAULTS
     *1113 *
     *1114 *          SET-DEFAULT FOR  EXTERIOR-WALL  HEIGHT=10  AZIMUTH=180
     *1115 *                                          CONSTRUCTION=WL1  ..
     *1116 *          SET-DEFAULT FOR  WINDOW         HEIGHT=4   Y=4  GLASS-TYPE=GT1  ..
     *1117 *
     *1118 *                  $ SPACE DESCRIPTION
     *1119 *
     *1120 * OFFICE        =SPACE-CONDITIONS    TEMPERATURE=(74)  FLOOR-WEIGHT=70
     *1121 *                                     EQUIPMENT-W/SQFT=1  EQUIP-SCHEDULE=EQ1
     *1122 *                                     LIGHTING-W/SQFT=1.5  LIGHTING-SCHEDULE=LT1
     *1123 *                                     INF-METHOD=AIR-CHANGE  AIR-CHANGES/HR=.2
     *1124 *                                     LIGHTING-TYPE=SUS-FLUOR
     *1125 *                                     PEOPLE-HG-LAT=200  PEOPLE-HG-SENS=250
     *1126 *                                     PEOPLE-SCHEDULE=OCCUP   ..
     *1127 *
```

```
*1128 * ATRIUM        =SPACE-CONDITIONS    TEMPERATURE=(74)  FLOOR-WEIGHT=100
*1129 *                                   LIGHTING-SCHEDULE=LIGHTS2
*1130 *                                   LIGHTING-TYPE=INCAND
*1131 *                                   LIGHTING-W/SQFT=2.2
*1132 *                                   EQUIP-SCHEDULE=EQ2
*1133 *                                   EQUIPMENT-W/SQFT=1.5
*1134 *                                   NUMBER-OF-PEOPLE=6
*1135 *                                   PEOPLE-HEAT-GAIN= 550
*1136 *                                   PEOPLE-SCHEDULE = OCCUP2
*1137 *                                   INF-SCHEDULE=INFIL  AIR-CHANGES/HR=.2
*1138 *                                   INF-METHOD=AIR-CHANGE   ..
*1139 *
*1140 * BZ1          =SPACE               S-C=OFFICE  NUMBER-OF-PEOPLE=20
*1141 *                                   AREA=3230  VOLUME=29070  AZ=90  Y=200  ..
*1142 *
*1143 *
*1144 * E1           =EXTERIOR-WALL       WIDTH=200  ..
*1145 * W1           =WINDOW              WIDTH=200  ..
*1146 *
*1147 * E1S          =EXTERIOR-WALL       W=17  AZ=90  X=200  ..
*1148 *
*1149 *               UNDERGROUND-FLOOR   AREA=3230  CONS=BW1  ..
*1150 *
*1151 * BZ2          =SPACE               S-C=OFFICE  AREA=1660 VOLUME=14940
*1152 *                                   NUMBER-OF-PEOPLE=10  AZ=180  X=100  Y=200  ..
*1153 *
*1154 * E2           =EXTERIOR-WALL       WIDTH=100  ..
*1155 * W2           =WINDOW              WIDTH=100  ..
*1156 *
*1157 *               UNDERGROUND-FLOOR   AREA=1660  CONS=BW1  ..
*1158 *
*1159 * BZ3          =SPACE               LIKE BZ1  AZ=-90  X=100  Y=0  ..
*1160 *
*1161 * E3           =EXTERIOR-WALL       LIKE E1  ..
*1162 * W3           =WINDOW              LIKE W1  ..
*1163 *
*1164 * E3S          =EXTERIOR-WALL       W=17  AZ=270  Y=17  ..
*1165 *
*1166 *               UNDERGROUND-FLOOR   AREA=3230  CONS=BW1  ..
*1167 *
*1168 * TZ1          =SPACE               LIKE BZ1  Z=10  ..
*1169 *
*1170 * R1           =ROOF                H=17  W=200  AZ=180  TILT=0  Z=10
*1171 *                                   CONS=OFF-ROF  ..
*1172 *
*1173 *               EXTERIOR-WALL       LIKE E1  ..
*1174 *               WINDOW              LIKE W1  ..
*1175 *
*1176 *               EXTERIOR-WALL       LIKE E1S  ..
*1177 *
*1178 * TZ2          =SPACE               LIKE BZ2  Z=10  ..
*1179 *
*1180 *               ROOF                LIKE R1  H=20  W=83  ..
*1181 *
*1182 *               EXTERIOR-WALL       LIKE E2  ..
*1183 *               WINDOW              LIKE W2  ..
*1184 *
*1185 * TZ3          =SPACE               LIKE BZ3  Z=10  ..
*1186 *               ROOF                LIKE R1  H=17  W=180  ..
*1187 *               EXTERIOR-WALL       LIKE E3  ..
*1188 *               WINDOW              LIKE W3  ..
*1189 *               EXTERIOR-WALL       LIKE E3S  ..
*1190 *
*1191 * IZ1          =SPACE               S-C=OFFICE  AREA=3540 VOLUME=70800
*1192 *                                   NUMBER-OF-PEOPLE=40  AZ=90  X=17  Y=180  ..
```

```
*1193 *
*1194 * IN1          =INTERIOR-WALL       AREA=1200  NEXT-TO ATZ1  CONS=WL2  ..
*1195 * IN2          =INTERIOR-WALL       AREA=1200  NEXT-TO ATZ2  CONS=WL2 ..
*1196 * IN3          =INTERIOR-WALL       AREA=800  NEXT-TO EQUIP-RM  CONS=WL3 ..
*1197 *               ROOF                LIKE R1  H=18  W=180  Z=20  ..
*1198 *               ROOF                LIKE R1  H=15  W=20  Y=18  Z=20  ..
*1199 *               EXTERIOR-WALL       H=20  W=18  AZ=90  X=180  ..
*1200 *               UNDERGROUND-FLOOR   AREA=3540  CONS=BW1  ..
*1201 *
*1202 * IZ2          =SPACE               LIKE IZ1  AZ=-90  X=83  Y=0  ..
*1203 *
*1204 *               INTERIOR-WALL       LIKE IN1  NEXT-TO ATZ1  ..
*1205 *               INTERIOR-WALL       LIKE IN2  NEXT-TO ATZ2  ..
*1206 *               INTERIOR-WALL       LIKE IN3  ..
*1207 *               EXTERIOR-WALL       H=20  W=18  AZ=270  Y=18  ..
*1208 *               ROOF                LIKE R1  H=18  W=180  Z=20  ..
*1209 *               ROOF                LIKE R1  H=15  W=20  X=160  Y=18  Z=20  ..
*1210 *               UNDERGROUND-FLOOR   AREA=3540  CONS=BW1  ..
*1211 *
*1212 * ATZ1         =SPACE               S-C=ATRIUM  AREA=1800  VOLUME=16200
*1213 *                                   X=35  Y=40  ..
*1214 *
*1215 * ATROOF-1     =ROOF                HEIGHT=66.6  WIDTH=30
*1216 *                                   AZIMUTH=0  TILT=26  X=30  Y=60  Z=20
*1217 *                                   CONS=ATR-ROF  ..
*1218 * E4           =EXTERIOR-WALL       H=14.5  W=60  AZ=270  Y=60  Z=20  ..
*1219 * E5           =EXTERIOR-WALL       LIKE E4  AZ=90  X=30  Y=0  ..
*1220 * F1           =UNDERGROUND-FLOOR   AREA=1800  CONS=BW2  ..
*1221 * FRAME-A      =EXTERIOR-WALL       HEIGHT=29  WIDTH=30  Z=20  ..
*1222 * WINDOW-A     =WINDOW              H=28.9  W=29.9  X=.05  Y=.05
*1223 *                                   GLASS-TYPE     = ELECTRO-CLEAR
*1224 *                                   GLASS-TYPE-SW  = ELECTRO-COLOR
*1225 *                                   SWITCH-CONTROL = SPACE-LOAD
*1226 *                                   SWITCH-SET-LO  = 0
*1227 *                                   SWITCH-SET-HI  = 0  ..
*1228 *
*1229 *               EXTERIOR-WALL       LIKE FRAME-A  HEIGHT=10.7  W=30  Z=9.3 ..
*1230 *               WINDOW              LIKE WINDOW-A  H=10.6  W=29.9 ..
*1231 *
*1232 * ATZ2         =SPACE               LIKE ATZ1  Y=100  ..
*1233 *
*1234 * ATROOF-2     =ROOF                LIKE ATROOF-1  ..
*1235 *               EXTERIOR-WALL       LIKE E4  ..
*1236 *               EXTERIOR-WALL       LIKE E5  ..
*1237 *               UNDERGROUND-FLOOR   LIKE F1  ..
*1238 * FRAME-B      =EXTERIOR-WALL       LIKE FRAME-A  ..
*1239 * WINDOW-B     =WINDOW              LIKE WINDOW-A ..
*1240 *
*1241 * EQUIP-RM     =SPACE               ZONE-TYPE=UNCONDITIONED
*1242 *                                   AREA=1200  VOLUME=17580  X=35  ..
*1243 *
*1244 *               EXTERIOR-WALL       HEIGHT=20  WIDTH=30  ..
*1245 *
*1246 *               ROOF                H=41.2  W=30  CONS=OFF-ROF
*1247 *                                   TILT=15  Z=9.3  X=30  Y=40  AZIMUTH=0 ..
*1248 *
*1249 *               INTERIOR-WALL       AREA=279  CONS=WL3  NEXT-TO ATZ1 ..
*1250 *               UNDERGROUND-FLOOR   AREA=1200  CONS=BW1  ..
*1251 *
*1252 *
*1253 * END  ..
*1254 * COMPUTE LOADS  ..
*1255 * INPUT SYSTEMS  ..
```

```
*1256 * SYSTEMS-REPORT  SUMMARY (SS-D,SS-A,SS-J)  ..
*1257 *
*1258 *                 $ HVAC SYSTEMS DESCRIPTION
*1259 *
*1260 * $ DESIGN TEMPS  ATRIUM  COOLING 76F-SUMMER, 72F-WINTER   HEATING SETBACK 65F
*1261 * $               OFFICE  COOLING 76F   HEATING 72F
*1262 * $ SYSTEM TYPE   THE OFFICE IS SERVED BY A VAVS SYSTEM WITH THE BASEBOARD RESET
*1263 * $               BY THE OUTSIDE AIR TEMPERATURE.
*1264 *
*1265 * $               THE RESTAURANT/DELI IS SERVED BY 2 PKG VARIABLE TEMPERATURE -
*1266 * $               CONSTANT VOLUME SYSTEMS (PSZ). THE UNIT SERVING THE DELI WHICH
*1267 * $               HAS OPEN CASEWORK FOR DISPLAY OF FOOD AND BEVERAGES RECOVERS
*1268 * $               REJECTED HEAT.  THIS SIMULATION CAN ALSO BE USED FOR GROCERY
*1269 * $               STORES.
*1270 * $               BOTH SYSTEMS HAVE DRY BULB ECONOMIZERS WITH A 68F LIMIT ON THE
*1271 * $               VAV SYSTEM AND A 25 BTUH/0DRY AIR ENTHALPY LIMIT AND A 74F
*1272 * $               DRYBULB LIMIT ON THE PKG DX UNITS REPRESENTATIVE OF PKG'D
*1273 * $               CONTROLLERS.  THE UNITS ARE ALSO FITTED WITH AN ECONO LOCKOUT
*1274 * $               WHICH PROTECTS THE COMPRESSOR FROM BURNOUT ON LOW EVAPORATOR
*1275 * $               LOADING.
*1276 *
*1277 *                      $ AIR HANDLING UNIT SCHEDULES
*1278 *
*1279 * DAYS          = WEEK-SCHEDULE (MON,SAT) (1,7)(0)(8,21)(1)(22,24)(0)
*1280 *                               (SUN,HOL) (1,24)(0)  ..
*1281 * AHU-SCHED     = SCHEDULE      THRU DEC 31 DAYS  ..
*1282 * AHU-SCHED2    = SCHEDULE      THRU DEC 31 (ALL) (1,24)(1)  ..
*1283 *
*1284 *                      $ HEATING THERMOSTAT SCHEDULE
*1285 *
*1286 * THEAT1        = SCHEDULE THRU DEC 31 (MON,SAT) (1,7)(65)(8,21)(72)(22,24)(65)
*1287 *                                      (SUN,HOL) (1,24)(65)  ..
*1288 *
*1289 *                      $ COOLING THERMOSTAT SCHEDULES
*1290 *
*1291 * TCOOL1        = SCHEDULE THRU DEC 31 (MON,SAT) (1,7)(90)(8,21)(76)(22,24)(90)
*1292 *                                      (SUN,HOL) (1,24)(90)  ..
*1293 * TCOOL2        = SCHEDULE THRU DEC 31 (ALL) (1,24)(76)  ..
*1294 *
*1295 *                        $ BASEBOARD RESET SCHEDULE
*1296 *
*1297 * R1  = DAY-RESET-SCH  SUPPLY-HI = 1    SUPPLY-LO = 0
*1298 *                      OUTSIDE-LO = 0  OUTSIDE-HI = 50  ..
*1299 * BASD-RESET    = RESET-SCHEDULE  THRU DEC 31 (ALL) R1  ..
*1300 *
*1301 *                        $ REFRIGERATED CASEWORK SCHEDULES
*1302 *
*1303 * FOOD-S-S      = SCHEDULE THRU DEC 31 (MON,SAT) (1,9)(.4) (10,21)(1) (22,24)(.4)
*1304 *                                      (SUN,HOL) (1,24)(.4)  ..
*1305 * FOOD-L-S      = SCHEDULE THRU DEC 31 (MON,SAT) (1,9)(.7) (10,21)(1) (22,24)(.7)
*1306 *                                      (SUN,HOL) (1,24)(.7)  ..
*1307 * FOOD-AUX-S    = SCHEDULE THRU DEC 31 (MON,SAT) (1,9)(.2) (10,21)(1) (22,24)(.2)
*1308 *                                      (SUN,HOL) (1,24)(.2)  ..
*1309 *
*1310 * MIN-OA        = SCHEDULE  THRU DEC 31 (ALL) (1,9)(0) (10,21)(-999) (22,24)(0) ..
*1311 *
*1312 *                          $ ZONE DESCRIPTION
```

```
*1313 *
*1314 * ENV-ATR       = ZONE-CONTROL  D-H-T 70  D-C-T 74  H-T-SCH THEAT1  C-T-SCH TCOOL2
*1315 *                               T-TYPE PROPORTIONAL  ..
*1316 * ENV-OFF       = ZONE-CONTROL  D-H-T 74  D-C-T 74  H-T-SCH THEAT1  C-T-SCH TCOOL1
*1317 *                               T-TYPE REVERSE-ACTION  ..
*1318 *
*1319 * ATZ1          = ZONE          Z-C ENV-ATR  OUTSIDE-AIR-CFM 665
*1320 *                               REFG-ZONE-LOAD =(-10000,-5000,-6000)
*1321 *                               REFG-ZONE-SHR = (.9,.8,.9)
*1322 *                               REFG-DISCHARGE-T =(-10,23,30)
*1323 *                               REFG-EVAP-T = (-25,20,25)
*1324 *                               REFG-SENS-SCH =(FOOD-S-S,FOOD-S-S,FOOD-S-S)
*1325 *                               REFG-LAT-SCH = (FOOD-L-S,FOOD-L-S,FOOD-L-S)
*1326 *                               REFG-AUX-SCH = (FOOD-AUX-S,FOOD-AUX-S,FOOD-AUX-S)
*1327 *                               REFG-DEF-MECH = (RESISTANCE,FREON,FREON)
*1328 *                               REFG-DEF-EFF = (.95,.80,.85)
*1329 *                               REFG-DEF-CTRL= (THERMOSTATIC,TIMER,TIMER)  ..
*1330 *
*1331 * ATZ2          = ZONE          Z-C ENV-ATR  OUTSIDE-AIR-CFM 665  ..
*1332 * EQUIP-RM      = ZONE          ZONE-TYPE=UNCONDITIONED ..
*1333 * BZ1           = ZONE          Z-C ENV-OFF  OA-CFM/PER=15  B-R=-90000 ..
*1334 * BZ2           = ZONE  LIKE BZ1 B-R=-37000  ..
*1335 * BZ3           = ZONE  LIKE BZ1 B-R=-100000  ..
*1336 * TZ1           = ZONE  LIKE BZ1 B-R=-94000  ..
*1337 * TZ2           = ZONE  LIKE BZ1 B-R=-40000  ..
*1338 * TZ3           = ZONE  LIKE BZ1 B-R=-104000  ..
*1339 * IZ1           = ZONE  LIKE BZ1 B-R=-54000  ..
*1340 * IZ2           = ZONE  LIKE BZ1 B-R=-54000  ..
*1341 *
*1342 * FS-SYS1       = SYSTEM        SYSTEM-TYPE=PSZ  MAX-S-T=100  MIN-S-T=55
*1343 *                               SUPPLY-STATIC=3  SUPPLY-EFF=.45  DRYBULB-LIMIT=74
*1344 *                               ENTHALPY-LIMIT=25  ECONO-LOCKOUT=YES
*1345 *                               HEAT-SOURCE=HOT-WATER
*1346 *                               REFG-SIZING-RAT =1.3
*1347 *                               REFG-COMP-GROUP (SEPARATE,COMMON,COMMON)
*1348 *                               REFG-MAX-HTREC = 30000
*1349 *                               REFG-HTREC-UNITS = (NO,YES)
*1350 *                               ZONE-NAMES = (ATZ1)  ..
*1351 *
*1352 * FS-SYS2       = SYSTEM        SYSTEM-TYPE=PSZ  MAX-S-T=100  MIN-S-T=55
*1353 *                               SUPPLY-STATIC=3  SUPPLY-EFF=.45
*1354 *                               FAN-SCHEDULE=AHU-SCHED  HEAT-SOURCE=HOT-WATER
*1355 *                               NIGHT-CYCLE-CTRL=CYCLE-ON-FIRST
*1356 *                               ZONE-NAMES=(ATZ2,EQUIP-RM)  ..
*1357 *
*1358 * OFF-SYS       = SYSTEM        SYSTEM-TYPE=VAVS  MAX-S-T=120  MIN-S-T=60
*1359 *                               SUPPLY-STATIC=5  SUPPLY-EFF=.55  ECONO-LIMIT-T=68
*1360 *                               FAN-SCHEDULE=AHU-SCHED  MIN-CFM-RATIO=.3
*1361 *                               FAN-CONTROL=SPEED  HEAT-SET-T=100
*1362 *                               RETURN-AIR-PATH=DUCT  OA-CONTROL=TEMP
*1363 *                               N-C-C=CYCLE-ON-ANY  REHEAT-DELTA-T=55
*1364 *                               MIN-AIR-SCH=MIN-OA  BASEBOARD-SCH=BASD-RESET
*1365 *                               ZONE-NAMES=(BZ1,BZ2,BZ3,TZ1,TZ2,TZ3,IZ1,IZ2) ..
*1366 * PLANT1 = PLANT-ASSIGNMENT  SYSTEM-NAMES = (FS-SYS1,FS-SYS2,OFF-SYS)
*1367 *                           DHW-SIZE     = 0
*1368 *                           DHW-GAL/MIN  = 4.44
*1369 *                           DHW-SCH      = DOMHW  ..
*1370 *
*1371 * D1 = D-SCH (1,7) (0)  (8,21) (.1,.2,.3,.4,.55,.6,.6,.45,.4,.45,.45,.4,.3,.3)
*1372 *                       (22,24) (0)  ..
*1373 * D2 = D-SCH (1,7) (0)  (8,22) (.15,.2,.25,.4,.5,.55,.55,.45,.45,.45,.45,.4,.35,
*1374 *                               .25,.2)  (23,24) (0)  ..
*1375 * D3 = D-SCH (1,9) (0)  (10,19) (.1,.25,.3,.35,.35,.3,.3,.35,.3,.2)
*1376 *                       (20,24) (0)  ..
*1377 * DOMHW = SCH THRU DEC 31 (WD) D1  (SAT) D2  (SUN,HOL) D3  ..
```

```
¤1378 * END  ..
¤1379 * COMPUTE SYSTEMS  ..
¤1380 * INPUT PLANT  ..
```

P D L P R O C E S S O R I N P U T D A T A

Wed Nov 10 15:17:48 1993PDL RUN 3

```
*1381 * PLANT1 = PLANT-ASSIGNMENT  ..
*1382 * PLANT-REPORT  SUMMARY (PS-A,PS-D,BEPS)  ..
*1383 *
*1384 *                        $ PLANT DESCRIPTION
*1385 *
*1386 * $ THIS PLANT IS SERVED BY A SINGLE GAS ENGINE DRIVEN PACKAGED CHILLER WITH
*1387 * $ HEAT RECOVERY FROM THE ENGINE THAT HEATS DOMESTIC HOT WATER (PROCESS) AND
*1388 * $ THE BUILDING.  A HOT WATER GENERATOR SERVES TO HEAT THE BUILDING WHENEVER
*1389 * $ THE CHILLER IS NOT IN USE. THE DOMESTIC HOT WATER IS ALSO HEATED BY THE
*1390 * $ HWG WHENEVER THE CHILLER IN NOT IN USE.
*1391 *
*1392 * HWG  = PLANT-EQUIPMENT  TYPE=HW-BOILER  SIZE -999  I-N 1  ..
*1393 * CHLR = PLANT-EQUIPMENT  TYPE=ENG-CHLR  SIZE -999  I-N 1  ..
*1394 *
*1395 * HEAT-RECOVERY SUPPLY-1 (ENG-CHLR)
*1396 *               DEMAND-1 (SPACE-HEAT,PROCESS-HEAT)  ..
*1397 *
*1398 * PLANT-PARAMETERS  ENG-CH-COP=1.1  ..
*1399 * END  ..
*1400 * COMPUTE PLANT  ..
*1401 * INPUT ECONOMICS  ..
```

```
*1402 * DIAGNOSTIC WARNINGS ..
*1403 * ECONOMICS-REPORT  SUMMARY (ES-D,ES-E)  ..
*1404 *
*1405 *                    $  ENERGY CHARGE DESCRIPTION
*1406 *
*1407 * $ THIS RATE STRUCTURE IS A TYPICAL SMALL COMMERCIAL TIME OF DAY TYPE WITH AND
*1408 * $ INVERTED RATE.  IN OTHER WORDS ENERGY COSTS INCREASE AS CONSUMPTION RISES.
*1409 * $ THERE IS A BASE CHARGE OF 2 CENTS/KWH PLUS A FIXED MONTHLY CHARGE OF 200
*1410 * $ DOLLARS.  ON TOP OF THESE CHARGES FALL THE KWH/KW ENERGY CHARGE FOR EACH
*1411 * $ SEASON.  THERE IS A LIMITATION OF 15000 KWHS FOR THE FIRST BLOCK.
*1412 * $ NATURAL GAS IS A FLAT RATE OF 60 CENTS PER THERM.
*1413 *
*1414 * ELEC-COST  = UTILITY-RATE   RESOURCE = ELECTRICITY
*1415 *                            MONTH-CHGS (200)
*1416 *                            BLOCK-CHARGES = (WIN-OFF-P,WIN-ON-P,
*1417 *                                             SUM-OFF-P,SUM-ON-P)
*1418 *                            ENERGY-CHG = .02  ..
*1419 *
*1420 * WIN-OFF-P  = BLOCK-CHARGE   BLOCK-SCH   = TOU-CHGS
*1421 *                            SCH-FLAG    = 1.1
*1422 *                            BLOCK1-TYPE = KWH/KW
*1423 *                            BLOCK1-DATA = (200,.025,15000,
*1424 *                                              1,.035,0)  ..
*1425 * WIN-ON-P   = BLOCK-CHARGE   BLOCK-SCH   = TOU-CHGS
*1426 *                            SCH-FLAG    = 1.2
*1427 *                            BLOCK1-TYPE = KWH/KW
*1428 *                            BLOCK1-DATA = (200,.040,15000,
*1429 *                                              1,.050,0)  ..
*1430 * SUM-OFF-P  = BLOCK-CHARGE   BLOCK-SCH   = TOU-CHGS
*1431 *                            SCH-FLAG    = 2.1
*1432 *                            BLOCK1-TYPE = KWH/KW
*1433 *                            BLOCK1-DATA = (200,.025,15000,
*1434 *                                              1,.035,0)  ..
*1435 * SUM-ON-P   = BLOCK-CHARGE   BLOCK-SCH   = TOU-CHGS
*1436 *                            SCH-FLAG    = 2.2
*1437 *                            BLOCK1-TYPE = KWH/KW
*1438 *                            BLOCK1-DATA = (150,.045,15000,
*1439 *                                              1,.055,0)  ..
*1440 * TOU-CHGS   = SCHEDULE  THRU MAY 15 (ALL)(1,12)(1.1)
*1441 *                                      (13,17)(1.2)
*1442 *                                      (18,24)(1.1)
*1443 *                         THRU OCT 20 (ALL)(1,12)(2.1)
*1444 *                                      (13,18)(2.2)
*1445 *                                      (19,24)(2.1)
*1446 *                         THRU DEC 31 (ALL)(1,12)(1.1)
*1447 *                                      (13,17)(1.2)
*1448 *                                      (18,24)(1.1)  ..
*1449 *
*1450 * GAS-COST   = UTILITY-RATE   RESOURCE = NATURAL-GAS
*1451 *                            ENERGY-CHG = .60  ..
*1452 * END  ..
*1453 * COMPUTE ECONOMICS  ..
*1454 * INPUT LOADS  ..
```

OFFICE BUILDING & DELI/RESTAURANT ELECTROCHROMIC GLAZING IN ATRIUM DOE-2.1E-001 Wed Nov 10 15:17:48 1993LDL RUN 3
VAV SYSTEM IN OFFICE & PSZ IN ATRIUM GAS ENGINE DRIVEN CHILLER & HEAT RECY SAHP3.INP RUN 3
REPORT- LS-D BUILDING MONTHLY LOADS SUMMARY WEATHER FILE- TRY CHICAGO

	COOLING						HEATING						ELEC	
MONTH	COOLING ENERGY (MBTU)	TIME OF MAX DY	TIME OF MAX HR	DRY-BULB TEMP	WET-BULB TEMP	MAXIMUM COOLING LOAD (KBTU/HR)	HEATING ENERGY (MBTU)	TIME OF MAX DY	TIME OF MAX HR	DRY-BULB TEMP	WET-BULB TEMP	MAXIMUM HEATING LOAD (KBTU/HR)	ELEC-TRICAL ENERGY (KWH)	MAXIMUM ELEC LOAD (KW)
JAN	7.20999	25	16	48.F	42.F	143.827	-101.398	1	7	-1.F	-1.F	-379.043	24148.	64.998
FEB	9.80719	9	16	23.F	19.F	184.981	-84.358	4	6	7.F	6.F	-345.886	21865.	64.998
MAR	23.84211	5	17	57.F	46.F	212.019	-52.775	24	6	8.F	7.F	-328.271	24734.	64.998
APR	69.42180	26	17	74.F	60.F	387.010	-19.922	8	5	33.F	30.F	-227.278	24212.	64.998
MAY	95.43662	21	12	87.F	76.F	412.119	-6.564	9	5	40.F	38.F	-123.827	24148.	64.998
JUN	141.87355	29	17	85.F	67.F	450.962	-0.391	1	5	48.F	47.F	-25.491	23806.	64.998
JUL	196.30849	9	17	97.F	73.F	532.357	0.000	6	4	60.F	54.F	-0.108	24639.	64.998
AUG	167.03616	19	17	90.F	71.F	505.317	-0.016	5	5	55.F	54.F	-10.219	24649.	64.998
SEP	106.53899	11	14	87.F	72.F	422.753	-3.346	23	5	36.F	33.F	-95.200	23316.	64.998
OCT	60.16368	5	15	74.F	62.F	320.579	-14.977	21	5	30.F	29.F	-159.590	24148.	64.998
NOV	23.76648	2	15	75.F	61.F	305.734	-50.568	15	6	28.F	26.F	-263.771	23231.	64.998
DEC	5.71840	10	15	41.F	35.F	139.875	-87.514	9	6	14.F	13.F	-291.999	23753.	64.998
TOTAL	907.123						-421.830						286650.	
MAX						532.357						-379.043		64.998

SYSTEM NAME	SYSTEM TYPE	ALTITUDE MULTIPLIER	FLOOR AREA (SQFT)	MAX PEOPLE
FS-SYS1	PSZ	1.020	1800.0	6.

SUPPLY FAN (CFM)	ELEC (KW)	DELTA-T (F)	RETURN FAN (CFM)	ELEC (KW)	DELTA-T (F)	OUTSIDE AIR RATIO	COOLING CAPACITY (KBTU/HR)	SENSIBLE (SHR)	HEATING CAPACITY (KBTU/HR)	COOLING EIR (BTU/BTU)	HEATING EIR (BTU/BTU)
2037.	1.562	2.4	0.	0.000	0.0	0.333	82.133	0.624	-115.188	0.36	0.37

ZONE NAME	SUPPLY FLOW (CFM)	EXHAUST FLOW (CFM)	FAN (KW)	MINIMUM FLOW RATIO	OUTSIDE AIR FLOW (CFM)	COOLING CAPACITY (KBTU/HR)	SENSIBLE (SHR)	EXTRACTION RATE (KBTU/HR)	HEATING CAPACITY (KBTU/HR)	ADDITION RATE (KBTU/HR)	MULTIPLIER
ATZ1	2037.	0.	0.000	1.000	678.	0.00	0.00	41.79	0.00	-65.98	1.0

REFRIGERATED EQUIP IN ATZ1

	- - - - - - - - - - - - Z O N E - - - - - - - - - - - -				- C O M P R E S S O R -		- - - C O N D E N S E R - - -		
UNIT	DISCHARGE TEMP (F)	SENSIBLE LOADS TEMP (KBTU/HR)	SENSIBLE HEAT TEMP (KBTU/HR)	SENSIBLE COOL TEMP (KBTU/HR)	COMPRESSOR CAPACITY (KBTU/HR)	COMPRESSOR EFFICIENCY (BTU/WATT)	DESIGN HEAT REJ (KBTU/HR)	FAN ENERGY (KW)	PUMP ENERGY (KW)
1	-10.0	-8.894	-8.471	-8.894	14.547	3.8	51.693	0.271	0.064
2	23.0	-3.923	-3.615	-3.923	16.390	7.0			
3	30.0	-5.280	-4.800	-5.280	0.000	7.3			

SYSTEM NAME	SYSTEM TYPE	ALTITUDE MULTIPLIER	FLOOR AREA (SQFT)	MAX PEOPLE
FS-SYS2	PSZ	1.020	3000.0	6.

SUPPLY FAN (CFM)	ELEC (KW)	DELTA-T (F)	RETURN FAN (CFM)	ELEC (KW)	DELTA-T (F)	OUTSIDE AIR RATIO	COOLING CAPACITY (KBTU/HR)	SENSIBLE (SHR)	HEATING CAPACITY (KBTU/HR)	COOLING EIR (BTU/BTU)	HEATING EIR (BTU/BTU)
2357.	1.808	2.4	0.	0.000	0.0	0.288	91.648	0.630	-124.146	0.36	0.37

ZONE NAME	SUPPLY FLOW (CFM)	EXHAUST FLOW (CFM)	FAN (KW)	MINIMUM FLOW RATIO	OUTSIDE AIR FLOW (CFM)	COOLING CAPACITY (KBTU/HR)	SENSIBLE (SHR)	EXTRACTION RATE (KBTU/HR)	HEATING CAPACITY (KBTU/HR)	ADDITION RATE (KBTU/HR)	MULTIPLIER
ATZ2	2357.	0.	0.000	1.000	678.	0.00	0.00	48.36	0.00	-76.35	1.0
EQUIP-RM	0.	0.	0.000	0.000	0.	0.00	0.00	0.00	0.00	0.00	1.0

SYSTEM NAME	SYSTEM TYPE	ALTITUDE MULTIPLIER	FLOOR AREA (SQFT)	MAX PEOPLE
OFF-SYS	VAVS	1.020	23320.0	180.

SUPPLY FAN (CFM)	ELEC (KW)	DELTA-T (F)	RETURN FAN (CFM)	ELEC (KW)	DELTA-T (F)	OUTSIDE AIR RATIO	COOLING CAPACITY (KBTU/HR)	SENSIBLE (SHR)	HEATING CAPACITY (KBTU/HR)	COOLING EIR (BTU/BTU)	HEATING EIR (BTU/BTU)
34360.	35.944	3.3	0.	0.000	0.0	0.080	914.790	0.842	-1044.564	0.00	0.37

ZONE NAME	SUPPLY FLOW (CFM)	EXHAUST FLOW (CFM)	FAN (KW)	MINIMUM FLOW RATIO	OUTSIDE AIR FLOW (CFM)	COOLING CAPACITY (KBTU/HR)	SENSIBLE (SHR)	EXTRACTION RATE (KBTU/HR)	HEATING CAPACITY (KBTU/HR)	ADDITION RATE (KBTU/HR)	MULTIPLIER
BZ1	6244.	0.	0.000	0.300	306.	0.00	0.00	94.41	-370.88	-400.19	1.0
BZ2	1763.	0.	0.000	0.300	153.	0.00	0.00	26.66	-104.74	-124.60	1.0
BZ3	6046.	0.	0.000	0.300	306.	0.00	0.00	91.41	-359.13	-400.36	1.0
TZ1	6570.	0.	0.000	0.300	306.	0.00	0.00	99.34	-390.26	-420.40	1.0
TZ2	1949.	0.	0.000	0.300	153.	0.00	0.00	29.46	-115.75	-136.81	1.0
TZ3	6434.	0.	0.000	0.300	306.	0.00	0.00	97.28	-382.18	-423.64	1.0
IZ1	2677.	0.	0.000	0.300	612.	0.00	0.00	40.48	-159.03	-187.01	1.0
IZ2	2677.	0.	0.000	0.300	612.	0.00	0.00	40.48	-159.03	-187.01	1.0

	COOLING						HEATING						ELEC	
MONTH	COOLING ENERGY (MBTU)	TIME OF MAX DY	TIME OF MAX HR	DRY-BULB TEMP	WET-BULB TEMP	MAXIMUM COOLING LOAD (KBTU/HR)	HEATING ENERGY (MBTU)	TIME OF MAX DY	TIME OF MAX HR	DRY-BULB TEMP	WET-BULB TEMP	MAXIMUM HEATING LOAD (KBTU/HR)	ELEC-TRICAL ENERGY (KWH)	MAXIMUM ELEC LOAD (KW)
JAN	28.06300	2	8	4.F	3.F	904.737	-246.882	12	8	-7.F	-7.F	-760.626	31535.	101.535
FEB	20.32421	8	8	7.F	6.F	650.254	-202.815	8	8	7.F	6.F	-676.419	28321.	102.189
MAR	15.78579	24	8	6.F	5.F	552.128	-135.528	24	8	6.F	5.F	-658.918	31184.	94.100
APR	30.51579	27	17	84.F	61.F	367.863	-45.265	8	8	31.F	28.F	-390.138	30517.	87.418
MAY	34.14484	21	13	87.F	76.F	526.504	-14.146	6	8	37.F	33.F	-231.873	30959.	99.177
JUN	103.27728	21	16	82.F	72.F	607.239	-0.330	1	7	47.F	46.F	-34.380	33937.	102.649
JUL	176.32637	19	12	88.F	74.F	733.177	0.000					0.000	40423.	117.664
AUG	140.24101	16	12	82.F	72.F	653.365	-0.007	4	21	67.F	62.F	-7.361	37726.	110.076
SEP	54.14698	11	16	86.F	72.F	509.824	-7.448	23	8	36.F	34.F	-216.228	31041.	97.821
OCT	22.50027	4	17	78.F	61.F	284.225	-36.683	21	8	30.F	29.F	-332.214	30045.	81.226
NOV	15.80578	26	8	25.F	22.F	432.624	-112.524	15	8	27.F	26.F	-444.431	29004.	90.030
DEC	14.23257	20	8	24.F	23.F	451.363	-190.934	9	8	13.F	12.F	-573.202	29858.	89.273
TOTAL	655.364						-992.565						384550.	
MAX						904.737						-760.626		117.664

MAXIMUM DAILY INTEGRATED COOLING LOAD (DES DAY) 0.000 (KBTU)
MAXIMUM DAILY INTEGRATED COOLING LOAD (WTH FILE) 9115.102 (KBTU)

OFFICE BUILDING & DELI/RESTAURANT ELECTROCHROMIC GLAZING IN ATRIUM DOE-2.1E-001 Wed Nov 10 15:17:48 1993SDL RUN 3
VAV SYSTEM IN OFFICE & PSZ IN ATRIUM GAS ENGINE DRIVEN CHILLER & HEAT RECY SAMP3.INP RUN 3
REPORT- SS-A SYSTEM MONTHLY LOADS SUMMARY FOR FS-SYS1 WEATHER FILE- TRY CHICAGO

	COOLING						HEATING						ELEC	
MONTH	COOLING ENERGY (MBTU)	TIME OF MAX DY	TIME OF MAX HR	DRY-BULB TEMP	WET-BULB TEMP	MAXIMUM COOLING LOAD (KBTU/HR)	HEATING ENERGY (MBTU)	TIME OF MAX DY	TIME OF MAX HR	DRY-BULB TEMP	WET-BULB TEMP	MAXIMUM HEATING LOAD (KBTU/HR)	ELEC-TRICAL ENERGY (KWH)	MAXIMUM ELEC LOAD (KW)
JAN	0.00000					0.000	-27.075	12	8	-7.F	-7.F	-104.956	6497.	13.011
FEB	0.00012	21	11	44.F	37.F	0.124	-21.999	4	8	7.F	6.F	-89.946	5868.	13.013
MAR	0.00045	3	17	78.F	61.F	0.450	-16.390	24	8	6.F	5.F	-83.091	6771.	13.649
APR	0.53489	28	15	78.F	68.F	22.995	-5.507	8	8	31.F	28.F	-61.313	6657.	15.933
MAY	1.70829	21	13	87.F	76.F	54.505	-2.497	10	8	42.F	40.F	-45.790	6918.	19.582
JUN	8.27777	20	16	90.F	77.F	72.588	-0.098	24	8	55.F	50.F	-10.712	7594.	18.450
JUL	23.14514	14	14	96.F	77.F	70.569	0.000	22	10	63.F	60.F	-0.169	9372.	21.825
AUG	17.48693	22	13	85.F	71.F	60.623	0.000	28	10	67.F	57.F	-0.081	8752.	20.459
SEP	4.76325	11	15	87.F	72.F	55.144	-0.925	23	8	36.F	34.F	-40.551	7072.	19.413
OCT	0.41688	31	14	76.F	66.F	24.270	-4.350	21	8	30.F	29.F	-55.855	6737.	15.704
NOV	0.31899	2	12	72.F	60.F	30.227	-13.475	26	8	25.F	22.F	-70.497	6439.	15.852
DEC	0.00000					0.000	-23.177	25	8	20.F	19.F	-84.624	6568.	12.987
TOTAL	56.653						-115.492						85245.	
MAX						72.588						-104.956		21.825

	-----COOLING-----				---HEATING---			DAY COOLING PEAK			
	JUN 20				JAN 12			JUL 14			
HOUR	HOURLY COOLING LOAD (KBTU)	SENSIBLE HEAT RATIO	DRY-BULB TEMP	WET-BULB TEMP	HOURLY HEATING LOAD (KBTU)	DRY-BULB TEMP	WET-BULB TEMP	HOURLY COOLING LOAD (KBTU)	SENSIBLE HEAT RATIO	DRY-BULB TEMP	WET-BULB TEMP
1	18.838	0.653	68.F	64.F	-39.978	5.F	4.F	53.800	0.675	83.F	72.F
2	16.845	0.648	68.F	64.F	-46.363	3.F	2.F	50.519	0.644	81.F	72.F
3	13.430	0.678	66.F	62.F	-51.193	1.F	0.F	48.529	0.658	80.F	71.F
4	11.366	0.678	66.F	62.F	-58.452	-2.F	-3.F	44.955	0.629	78.F	71.F
5	10.633	0.660	65.F	62.F	-59.337	-4.F	-5.F	43.271	0.642	77.F	70.F
6	10.977	0.658	65.F	62.F	-63.595	-5.F	-6.F	43.811	0.626	78.F	71.F
7	15.778	0.633	67.F	64.F	-62.290	-6.F	-7.F	48.364	0.647	79.F	71.F
8	21.321	0.683	73.F	65.F	-104.956	-7.F	-7.F	46.829	0.643	82.F	72.F
9	27.427	0.676	76.F	67.F	-81.039	-8.F	-8.F	44.817	0.624	86.F	74.F
10	46.646	0.646	80.F	71.F	-59.529	-7.F	-7.F	51.295	0.672	88.F	74.F
11	52.703	0.662	83.F	72.F	-49.512	-4.F	-5.F	62.013	0.661	91.F	76.F
12	60.836	0.637	84.F	74.F	-35.106	0.F	0.F	65.000	0.702	94.F	76.F
13	64.374	0.661	85.F	74.F	-35.167	4.F	2.F	70.569	0.703	96.F	77.F
14	66.430	0.665	88.F	75.F	-36.851	6.F	4.F	56.277	0.676	87.F	74.F
15	72.588	0.639	90.F	77.F	-41.328	4.F	2.F	51.033	0.628	76.F	71.F
16	66.081	0.604	90.F	78.F	-51.659	3.F	1.F	47.923	0.607	78.F	72.F
17	70.534	0.628	91.F	78.F	-67.385	1.F	0.F	45.617	0.604	78.F	72.F
18	62.084	0.629	90.F	77.F	-74.130	-2.F	-3.F	52.692	0.648	89.F	75.F
19	68.650	0.604	89.F	78.F	-76.864	-4.F	-5.F	49.233	0.626	87.F	75.F
20	48.722	0.567	79.F	74.F	-80.681	-4.F	-5.F	43.054	0.612	84.F	74.F
21	34.966	0.635	70.F	67.F	-82.165	-3.F	-4.F	51.427	0.629	84.F	74.F
22	30.040	0.634	69.F	66.F	0.000	-3.F	-4.F	54.179	0.615	82.F	74.F
23	29.703	0.675	70.F	65.F	-26.672	-2.F	-3.F	50.060	0.640	80.F	72.F
24	26.112	0.722	71.F	64.F	-30.368	-1.F	-2.F	47.530	0.605	78.F	72.F
SUM								1222.796			
MAX	72.588				-104.956						

SYSTEM-TYPE	PSZ	SQFT/TON	297.6
COOLING PEAK	40.33 (BTU/HR- SQFT)	HEATING PEAK	-58.31 (BTU/HR- SQFT)
SUPPLY AIR PEAK FLOW	1.13 (CFM/SQFT)	MIN-OA/PERSON	113.05 (CFM)
OA FRAC AT CLG PEAK	0.333	OA FRAC AT HTG PEAK	0.333

* ASTERISKS INDICATE HOURS LOADS NOT MET

OFFICE BUILDING & DELI/RESTAURANT ELECTROCHROMIC GLAZING IN ATRIUM DOE-2.1E-001 Wed Nov 10 15:17:48 1993SDL RUN 3
VAV SYSTEM IN OFFICE & PSZ IN ATRIUM GAS ENGINE DRIVEN CHILLER & HEAT RECY SAMP3.INP RUN 3
REPORT- REFG REFRIGERATION EQUIPMENT SUMMARY IN FS-SYS1 FOR AT21 WEATHER FILE- TRY CHICAGO

	--- ZONAL ---		- CONDENSER -		---------- ELECTRIC ----------			
MONTH	SENSIBLE ENERGY (MBTU)	LATENT ENERGY (MBTU)	RECOVERED ENERGY (MBTU)	REJECTED ENERGY (MBTU)	COMPRESSOR ENERGY (KWH)	DEFROST ENERGY (KWH)	AUXILIARY ENERGY (KWH)	TOTAL ENERGY (KWH)
JAN	-8.051	-0.205	6.859	8.477	1794.660	35.590	424.873	2255.114
FEB	-7.339	-0.140	6.089	7.797	1623.904	28.054	363.958	2015.910
MAR	-8.394	-0.384	6.333	9.881	1877.289	58.976	507.071	2443.329
APR	-8.323	-0.608	2.903	13.327	1836.799	84.056	515.206	2436.051
MAY	-8.504	-0.894	1.824	15.136	1903.686	114.921	521.514	2540.107
JUN	-8.743	-1.098	0.094	17.618	1980.551	136.158	516.831	2633.526
JUL	-9.064	-1.264	0.000	18.889	2171.995	154.283	528.234	2854.497
AUG	-9.029	-1.287	0.000	18.744	2131.731	156.716	528.234	2816.669
SEP	-8.498	-0.886	0.654	16.179	1874.172	113.553	510.110	2497.823
OCT	-8.413	-0.701	2.680	13.814	1859.778	94.442	520.973	2475.178
NOV	-7.883	-0.458	5.307	10.014	1763.652	67.656	481.192	2312.487
DEC	-8.053	-0.262	6.923	8.522	1807.183	46.460	467.373	2321.008
TOTAL	-100.294	-8.186	39.665	158.397	22625.402	1090.864	5885.571	29601.697

OFFICE BUILDING & DELI/RESTAURANT ELECTROCHROMIC GLAZING IN ATRIUM DOE-2.1E-001 Wed Nov 10 15:17:48 1993SDL RUN 3
VAV SYSTEM IN OFFICE & PSZ IN ATRIUM GAS ENGINE DRIVEN CHILLER & HEAT RECY SAMP3.INP RUN 3
REPORT- SS-A SYSTEM MONTHLY LOADS SUMMARY FOR FS-SYS2 WEATHER FILE- TRY CHICAGO

	COOLING						HEATING						ELEC	
MONTH	COOLING ENERGY (MBTU)	TIME OF MAX DY	TIME OF MAX HR	DRY-BULB TEMP	WET-BULB TEMP	MAXIMUM COOLING LOAD (KBTU/HR)	HEATING ENERGY (MBTU)	TIME OF MAX DY	TIME OF MAX HR	DRY-BULB TEMP	WET-BULB TEMP	MAXIMUM HEATING LOAD (KBTU/HR)	ELEC-TRICAL ENERGY (KWH)	MAXIMUM ELEC LOAD (KW)
JAN	0.00000					0.000	-11.293	12	8	-7.F	-7.F	-88.727	3721.	8.122
FEB	0.00000					0.000	-8.909	8	8	7.F	6.F	-74.332	3384.	8.122
MAR	0.11991	3	15	76.F	65.F	25.692	-6.079	24	8	6.F	5.F	-65.801	3861.	10.644
APR	1.87567	28	15	78.F	68.F	44.295	-1.443	8	8	31.F	28.F	-44.049	3900.	12.244
MAY	2.81333	21	13	87.F	76.F	74.494	-0.250	10	8	42.F	40.F	-26.371	4051.	15.756
JUN	11.61781	20	17	90.F	78.F	72.857	-0.002	23	8	53.F	49.F	-0.908	5015.	14.894
JUL	25.78890	14	14	96.F	77.F	88.337	0.000					0.000	6598.	17.637
AUG	20.56810	26	17	94.F	76.F	77.483	0.000					0.000	6022.	16.621
SEP	7.04253	11	15	87.F	72.F	71.332	-0.073	23	8	36.F	34.F	-21.685	4460.	15.511
OCT	1.46020	30	14	74.F	66.F	44.003	-0.762	21	8	30.F	29.F	-37.147	3870.	12.032
NOV	0.60799	2	12	72.F	60.F	42.775	-4.558	15	8	27.F	26.F	-53.540	3647.	11.922
DEC	0.00000					0.000	-9.773	25	8	20.F	19.F	-66.732	3717.	8.122
TOTAL	71.894						-43.141						52245.	
MAX						88.337						-88.727		17.637

	-----COOLING------				---HEATING---			DAY COOLING PEAK			
	JUL 14				JAN 12			JUL 19			
HOUR	HOURLY COOLING LOAD (KBTU)	SENSIBLE HEAT RATIO	DRY-BULB TEMP	WET-BULB TEMP	HOURLY HEATING LOAD (KBTU)	DRY-BULB TEMP	WET-BULB TEMP	HOURLY COOLING LOAD (KBTU)	SENSIBLE HEAT RATIO	DRY-BULB TEMP	WET-BULB TEMP
1	0.000	0.000	83.F	72.F	0.000	5.F	4.F	0.000	0.000	79.F	72.F
2	59.162	0.701	81.F	72.F	0.000	3.F	2.F	57.605	0.679	79.F	72.F
3	0.000	0.000	80.F	71.F	0.000	1.F	0.F	0.000	0.000	78.F	72.F
4	55.581	0.686	78.F	71.F	0.000	-2.F	-3.F	55.877	0.667	78.F	72.F
5	0.000	0.000	77.F	70.F	0.000	-4.F	-5.F	0.000	0.000	77.F	72.F
6	54.616	0.687	78.F	71.F	0.000	-5.F	-6.F	55.334	0.664	78.F	72.F
7	60.885	0.689	79.F	71.F	0.000	-6.F	-7.F	62.785	0.651	77.F	72.F
8	59.554	0.675	82.F	72.F	-88.727	-7.F	-7.F	57.064	0.646	79.F	72.F
9	68.720	0.676	86.F	74.F	-70.374	-8.F	-8.F	60.637	0.680	82.F	72.F
10	73.169	0.709	88.F	74.F	-45.139	-7.F	-7.F	72.009	0.703	85.F	73.F
11	82.488	0.697	91.F	76.F	-36.470	-4.F	-5.F	79.021	0.717	88.F	74.F
12	84.127	0.730	94.F	76.F	-24.549	0.F	0.F	83.623	0.734	89.F	74.F
13	88.337	0.729	96.F	77.F	-23.550	4.F	2.F	86.265	0.720	90.F	75.F
14	75.458	0.717	87.F	74.F	-24.438	6.F	4.F	84.224	0.712	89.F	75.F
15	70.399	0.677	76.F	71.F	-28.098	4.F	2.F	83.744	0.718	90.F	75.F
16	68.095	0.663	78.F	72.F	-35.547	3.F	1.F	81.588	0.699	91.F	76.F
17	66.924	0.658	78.F	72.F	-47.496	1.F	0.F	77.269	0.713	90.F	75.F
18	73.395	0.687	89.F	75.F	-53.029	-2.F	-3.F	73.102	0.698	86.F	74.F
19	70.625	0.671	87.F	75.F	-56.050	-4.F	-5.F	71.357	0.692	86.F	74.F
20	65.091	0.661	84.F	74.F	-58.963	-4.F	-5.F	63.081	0.675	80.F	72.F
21	0.000	0.000	84.F	74.F	-60.315	-3.F	-4.F	0.000	0.000	79.F	72.F
22	61.891	0.660	82.F	74.F	0.000	-3.F	-4.F	58.751	0.676	77.F	71.F
23	0.000	0.000	80.F	72.F	0.000	-2.F	-3.F	0.000	0.000	76.F	71.F
24	56.025	0.661	78.F	72.F	0.000	-1.F	-2.F	54.053	0.665	74.F	70.F
SUM								1317.392			
MAX	88.337				-88.727						

SYSTEM-TYPE	PSZ	SQFT/TON	407.5
COOLING PEAK	29.45 (BTU/HR- SQFT)	HEATING PEAK	-29.58 (BTU/HR- SQFT)
SUPPLY AIR PEAK FLOW	0.79 (CFM/SQFT)	MIN-OA/PERSON	113.05 (CFM)
OA FRAC AT CLG PEAK	0.288	OA FRAC AT HTG PEAK	0.288

* ASTERISKS INDICATE HOURS LOADS NOT MET

OFFICE BUILDING & DELI/RESTAURANT ELECTROCHROMIC GLAZING IN ATRIUM DOE-2.1E-001 Wed Nov 10 15:17:48 1993SDL RUN 3
VAV SYSTEM IN OFFICE & PSZ IN ATRIUM GAS ENGINE DRIVEN CHILLER & HEAT RECY SAMP3.INP RUN 3
REPORT- SS-A SYSTEM MONTHLY LOADS SUMMARY FOR OFF-SYS WEATHER FILE- TRY CHICAGO

	COOLING						HEATING						ELEC	
MONTH	COOLING ENERGY (MBTU)	TIME OF MAX DY	TIME OF MAX HR	DRY-BULB TEMP	WET-BULB TEMP	MAXIMUM COOLING LOAD (KBTU/HR)	HEATING ENERGY (MBTU)	TIME OF MAX DY	TIME OF MAX HR	DRY-BULB TEMP	WET-BULB TEMP	MAXIMUM HEATING LOAD (KBTU/HR)	ELEC-TRICAL ENERGY (KWH)	MAXIMUM ELEC LOAD (KW)
JAN	28.06300	2	8	4.F	3.F	904.737	-215.374	12	21	-3.F	-4.F	-573.000	21317.	82.906
FEB	20.32421	8	8	7.F	6.F	650.254	-177.996	9	7	2.F	2.F	-550.080	19070.	81.677
MAR	15.78579	24	8	6.F	5.F	552.128	-119.392	24	8	6.F	5.F	-516.134	20552.	73.602
APR	30.51579	27	17	84.F	61.F	367.863	-41.217	8	8	31.F	28.F	-290.941	19960.	66.560
MAY	34.14484	21	13	87.F	76.F	526.504	-13.223	7	7	33.F	30.F	-194.820	19989.	67.848
JUN	103.27728	21	16	82.F	72.F	607.239	-0.324	1	7	47.F	46.F	-34.380	21329.	76.179
JUL	176.32637	19	12	88.F	74.F	733.177	0.000					0.000	24454.	82.149
AUG	140.24101	16	12	82.F	72.F	653.365	-0.007	4	21	67.F	62.F	-7.361	22952.	78.992
SEP	54.14698	11	16	86.F	72.F	509.824	-7.105	22	8	34.F	31.F	-183.360	19509.	66.187
OCT	22.50027	4	17	78.F	61.F	284.225	-34.251	2	7	28.F	25.F	-252.120	19438.	60.286
NOV	15.80578	26	8	25.F	22.F	432.624	-99.798	15	8	27.F	26.F	-329.422	18918.	69.186
DEC	14.23257	20	8	24.F	23.F	451.363	-164.908	22	7	11.F	11.F	-446.940	19572.	69.642
TOTAL	655.364						-873.595						247062.	
MAX						904.737						-573.000		82.906

	-----COOLING-----				---HEATING---			DAY COOLING PEAK			
	JAN 2				JAN 12			JUL 19			
HOUR	HOURLY COOLING LOAD (KBTU)	SENSIBLE HEAT RATIO	DRY-BULB TEMP	WET-BULB TEMP	HOURLY HEATING LOAD (KBTU)	DRY-BULB TEMP	WET-BULB TEMP	HOURLY COOLING LOAD (KBTU)	SENSIBLE HEAT RATIO	DRY-BULB TEMP	WET-BULB TEMP
1	0.000	0.000	1.F	0.F	-515.700	5.F	4.F	0.000	0.000	79.F	72.F
2	465.383	1.000	1.F	0.F	-538.620	3.F	2.F	0.000	0.000	79.F	72.F
3	0.000	0.000	1.F	0.F	-561.540	1.F	0.F	0.000	0.000	78.F	72.F
4	453.277	1.000	2.F	1.F	-573.000	-2.F	-3.F	0.000	0.000	78.F	72.F
5	0.000	0.000	2.F	1.F	-573.000	-4.F	-5.F	0.000	0.000	77.F	72.F
6	447.559	1.000	2.F	1.F	-573.000	-5.F	-6.F	0.000	0.000	78.F	72.F
7	0.000	0.000	3.F	2.F	-573.000	-6.F	-7.F	571.887	0.974	77.F	72.F
8	904.737 *	1.000	4.F	3.F	-573.000	-7.F	-7.F	552.179 *	0.965	79.F	72.F
9	687.237 *	1.000	4.F	3.F	-573.000	-8.F	-8.F	713.220 *	0.863	82.F	72.F
10	0.000	0.000	5.F	4.F	-573.000	-7.F	-7.F	728.420 *	0.867	85.F	73.F
11	0.000	0.000	6.F	5.F	-573.000	-4.F	-5.F	733.177 *	0.863	88.F	74.F
12	0.000	0.000	8.F	7.F	-573.000	0.F	0.F	683.416 *	0.874	89.F	74.F
13	0.000	0.000	9.F	9.F	-527.160	4.F	2.F	641.530	0.868	90.F	75.F
14	0.000	0.000	11.F	11.F	-504.240	6.F	4.F	686.142	0.850	89.F	75.F
15	0.000	0.000	12.F	12.F	-527.160	4.F	2.F	703.927	0.858	90.F	75.F
16	0.000	0.000	14.F	13.F	-538.620	3.F	1.F	700.279	0.854	91.F	76.F
17	0.000	0.000	15.F	14.F	-561.540	1.F	0.F	694.358	0.859	90.F	75.F
18	0.000	0.000	15.F	15.F	-573.000	-2.F	-3.F	621.562	0.860	86.F	74.F
19	0.000	0.000	17.F	16.F	-573.000	-4.F	-5.F	578.564	0.853	86.F	74.F
20	0.000	0.000	17.F	16.F	-573.000	-4.F	-5.F	506.435	0.843	80.F	72.F
21	0.000	0.000	18.F	18.F	-573.000	-3.F	-4.F	0.000	0.000	79.F	72.F
22	0.000	0.000	17.F	17.F	-573.000	-3.F	-4.F	0.000	0.000	77.F	71.F
23	0.000	0.000	17.F	17.F	-573.000	-2.F	-3.F	0.000	0.000	76.F	71.F
24	0.000	0.000	17.F	17.F	-573.000	-1.F	-2.F	0.000	0.000	74.F	70.F
	---				---			---			
SUM								9115.097			
MAX	904.737				-573.000						

SYSTEM-TYPE	VAVS	SQFT/TON	309.3
COOLING PEAK	38.80 (BTU/HR- SQFT)	HEATING PEAK	-24.57 (BTU/HR- SQFT)
SUPPLY AIR PEAK FLOW	1.47 (CFM/SQFT)	MIN-OA/PERSON	15.30 (CFM)
OA FRAC AT CLG PEAK	0.000	OA FRAC AT HTG PEAK	0.259

* ASTERISKS INDICATE HOURS LOADS NOT MET

MESSAGE LIST FROM PLANT PROGRAM

```
**CAUTION*****************************************************************
        TOWER WILL BE DEFINED FOR CHILLERS THAT NEED IT
```

EQUIPMENT	SIZE (MBTU/H)	NUMBER INSTD	NUMBER AVAIL	SIZE (MBTU/H)	NUMBER INSTD	NUMBER AVAIL	SIZE (MBTU/H)	NUMBER INSTD	NUMBER AVAIL	SIZE (MBTU/H)	NUMBER INSTD	NUMBER AVAIL	SIZE (MBTU/H)	NUMBER INSTD	NUMBER AVAIL	SIZE (MBTU/H)	NUMBER INSTD	NUMBER AVAIL
HW-BOILER	0.903	1	1															
ENG-CHLR	0.923	1	1															
COOLING-TWR	1.778	1	1															

OFFICE BUILDING & DELI/RESTAURANT ELECTROCHROMIC GLAZING IN ATRIUM DOE-2.1E-001 Wed Nov 10 15:17:48 1993PDL RUN 3
VAV SYSTEM IN OFFICE & PSZ IN ATRIUM GAS ENGINE DRIVEN CHILLER & HEAT RECY SAMP3.INP RUN 3
REPORT- PS-A PLANT ENERGY UTILIZATION SUMMARY WEATHER FILE- TRY CHICAGO

	SITE ENERGY												SOURCE
	2	3	4	5	6	7	8	9	10	11	12	13	14
MONTH	TOTAL HEAT LOAD (MBTU)	TOTAL COOLING LOAD (MBTU)	TOTAL ELECTR LOAD (MWH)	RCVRED ENERGY (MBTU)	WASTED RCVRABL ENERGY (MBTU)	FUEL INPUT COOLING (MBTU)	ELEC INPUT COOLING (MWH)	FUEL INPUT HEATING (MBTU)	ELEC INPUT HEATING (MWH)	FUEL INPUT ELECT (MBTU)	TOTAL FUEL INPUT (MBTU)	TOTAL SITE ENERGY (MBTU)	TOTAL SOURCE ENERGY (MBTU)
JAN	285.0	29.6	37.0	12.5	0.0	23.9	0.7	392.7	4.7	0.0	416.6	542.9	795.7
FEB	238.4	21.4	33.1	8.8	0.0	16.8	0.5	335.2	4.2	0.0	352.1	465.0	690.9
MAR	175.1	17.2	35.9	8.3	0.0	15.9	0.7	257.0	4.0	0.0	273.0	395.4	640.4
APR	80.4	34.1	34.1	15.3	2.2	33.6	1.9	104.9	1.9	0.0	138.5	255.1	488.2
MAY	46.0	38.4	34.0	14.9	4.9	38.3	2.4	50.8	1.0	0.0	89.1	205.0	436.9
JUN	28.6	110.0	37.4	24.4	22.4	89.3	5.2	6.9	0.1	0.0	96.2	223.8	479.1
JUL	26.6	183.3	44.2	24.6	47.9	138.8	8.6	3.2	0.1	0.0	142.0	293.0	595.0
AUG	25.9	146.9	41.3	23.5	35.1	111.8	7.1	3.9	0.1	0.0	115.7	256.5	538.2
SEP	33.8	59.4	34.1	18.0	10.5	54.7	3.6	25.9	0.5	0.0	80.6	196.9	429.6
OCT	66.9	26.0	33.4	13.2	1.7	28.7	1.8	87.4	1.7	0.0	116.1	230.1	458.1
NOV	145.0	17.5	33.3	7.9	0.6	16.5	0.9	215.2	3.6	0.0	231.7	345.4	573.0
DEC	227.4	15.3	35.1	6.9	0.0	13.0	0.5	332.5	4.7	0.0	345.5	465.2	704.7
TOTAL	1379.1	699.2	432.9	178.2	125.2	581.3	34.0	1815.7	26.7	0.0	2397.1	3874.5	6829.9

HEATING LOADS	MBTU SUPPLIED	PCT OF TOTAL LOAD
HW-BOILER	1200.9	87.1
ENG-CHLR	178.2	12.9
LOAD SATISFIED	1379.1	100.0
TOTAL LOAD ON PLANT	1379.1	

COOLING LOADS	MBTU SUPPLIED	PCT OF TOTAL LOAD
ENG-CHLR	699.2	100.0
LOAD SATISFIED	699.2	100.0
TOTAL LOAD ON PLANT	699.2	

ELECTRICAL LOADS	KWH SUPPLIED	PCT OF TOTAL LOAD
ELECTRICITY	432901.9	100.0
LOAD SATISFIED	432901.9	100.0
TOTAL LOAD ON PLANT	432901.2	

TOWER ABOVE DESIGN TEMPERATURE OF 85.F 0 HOURS

SUMMARY OF LOADS MET

TYPE OF LOAD	TOTAL LOAD (MBTU)	LOAD SATISFIED (MBTU)	TOTAL OVERLOAD (MBTU)	PEAK OVERLOAD (MBTU)	HOURS OVERLOADED
HEATING LOADS	1379.1	1379.1	0.000	0.000	0
COOLING LOADS	699.2	699.2	0.000	0.000	0
ELECTRICAL LOADS	1477.5	1477.5	0.000	0.000	0

ENERGY TYPE: UNITS: MBTU	ELECTRICITY	NATURAL-GAS	RECOVERED
CATEGORY OF USE			
AREA LIGHTS	522.7	0.0	0.0
MISC EQUIPMT	455.6	0.0	0.0
SPACE HEAT	60.7	1442.8	57.6
SPACE COOL	53.7	581.3	0.0
HEAT REJECT	37.9	0.0	0.0
PUMPS & MISC	39.4	0.0	0.0
VENT FANS	189.5	0.0	0.0
REFRIGERATN	101.0	0.0	0.0
DOMHOT WATER	17.1	373.0	120.6
TOTAL	1477.5	2397.1	178.2

TOTAL SITE ENERGY	3874.52 MBTU	143.9 KBTU/SQFT-YR GROSS-AREA	143.9 KBTU/SQFT-YR NET-AREA
TOTAL SOURCE ENERGY	6829.89 MBTU	253.7 KBTU/SQFT-YR GROSS-AREA	253.7 KBTU/SQFT-YR NET-AREA

PERCENT OF HOURS ANY SYSTEM ZONE OUTSIDE OF THROTTLING RANGE = 0.7
PERCENT OF HOURS ANY PLANT LOAD NOT SATISFIED = 0.0

NOTE: ENERGY IS APPORTIONED HOURLY TO ALL END-USE CATEGORIES.

UTILITY-RATE	RESOURCE	METERS	METERED ENERGY UNITS/YR	TOTAL CHARGE ($)	VIRTUAL RATE ($/UNIT)	RATE USED ALL YEAR?
ELEC-COST	ELECTRICITY	1 2 3 4 5	432902. KWH	25362.	0.0586	YES
GAS-COST	NATURAL-GAS	1 2 3 4 5	23971. THERM	14382.	0.6000	YES
				==========		
				39744.		

ENERGY COST/GROSS BLDG AREA: 1.48
ENERGY COST/NET BLDG AREA: 1.48

REPORT- ES-E SUMMARY OF UTILITY-RATE: ELEC-COST

UTILITY-RATE: ELEC-COST
RESOURCE: ELECTRICITY
METERS: 1 2 3 4 5
POWER-FACTOR: 0.80
DEMAND-WINDOW: HOUR
BILLING-DAY: 31
EXCESS-KVAR-FRAC: 0.30
3413. BTU/KWH
RATE-LIMITATION: 0.0000
EXCESS-KVAR-CHG: 0.0000

RATE-QUALIFICATIONS		BLOCK-CHARGES	DEMAND-RATCHETS	MIN-MON-RATCHETS
MIN-ENERGY:	0.0	WIN-OFF-P		
MAX-ENERGY:	0.0	WIN-ON-P		
MIN-DEMAND:	0.0	SUM-OFF-P		
MAX-DEMAND:	0.0	SUM-ON-P		
QUALIFY-RATE:	ALL-MONTHS			
USE-MIN-QUAL:	NO			

MONTH	METERED ENERGY KWH	BILLING ENERGY KWH	METERED DEMAND KW	BILLING DEMAND KW	ENERGY CHARGE ($)	DEMAND CHARGE ($)	ENERGY CST ADJ ($)	TAXES ($)	SURCHRG ($)	FIXED CHARGE ($)	MINIMUM CHARGE ($)	VIRTUAL RATE ($/UNIT)	TOTAL CHARGE ($)
JAN	37028	37028	108.2	108.2	1938	0	0	0	0	200	0	0.0577	2138
FEB	33090	33090	108.8	108.8	1716	0	0	0	0	200	0	0.0579	1916
MAR	35881	35881	100.7	100.7	1875	0	0	0	0	200	0	0.0578	2075
APR	34149	34149	94.1	94.1	1779	0	0	0	0	200	0	0.0580	1979
MAY	33969	33969	109.9	109.9	1733	0	0	0	0	200	0	0.0569	1933
JUN	37386	37386	112.4	112.4	2048	0	0	0	0	200	0	0.0601	2248
JUL	44243	44243	129.1	129.1	2469	0	0	0	0	200	0	0.0603	2669
AUG	41261	41261	120.3	120.3	2283	0	0	0	0	200	0	0.0602	2483
SEP	34085	34085	107.9	107.9	1852	0	0	0	0	200	0	0.0602	2052
OCT	33404	33404	91.0	91.0	1709	0	0	0	0	200	0	0.0571	1909
NOV	33329	33329	96.7	96.7	1731	0	0	0	0	200	0	0.0579	1931
DEC	35076	35076	95.9	95.9	1828	0	0	0	0	200	0	0.0578	2028
TOTAL	432902	432902	129.1		22962	0	0	0	0	2400		0.0586	25362

REPORT- ES-F BLOCK-CHARGE AND RATCHET SUMMARY FOR: ELEC-COST

UTILITY-RATE: ELEC-COST
RESOURCE: ELECTRICITY
ENERGY-UNITS: KWH
DEMAND-UNITS: KW
DEMAND-WINDOW: HOUR

BLOCK-CHARGES	JAN	FEB	MAR	APR	MAY	JUN	JUL	AUG	SEP	OCT	NOV	DEC	YEAR
WIN-OFF-P USE: TIME-OF-USE													
METERED ENERGY:	26684	23815	25548	23950	11619	0	0	0	0	8506	23753	25255	
BILLING ENERGY:	26684	23815	25548	23950	11619	0	0	0	0	8506	23753	25255	169131
KWH/KW DEMAND:	108.2	108.8	100.7	94.1	89.1	0.0	0.0	0.0	0.0	91.0	96.7	95.9	
ENERGY CHGS($):	784	684	744	688	290	0	0	0	0	213	681	734	4818
WIN-ON-P USE: TIME-OF-USE													
METERED ENERGY:	10344	9275	10332	10199	4998	0	0	0	0	3734	9576	9821	
BILLING ENERGY:	10344	9275	10332	10199	4998	0	0	0	0	3734	9576	9821	68280
KWH/KW DEMAND:	103.1	93.0	90.1	92.9	85.9	0.0	0.0	0.0	0.0	90.0	90.9	86.9	
ENERGY CHGS($):	414	371	413	408	200	0	0	0	0	149	383	393	2731
SUM-OFF-P USE: TIME-OF-USE													
METERED ENERGY:	0	0	0	0	10899	23216	27481	25564	21309	13683	0	0	
BILLING ENERGY:	0	0	0	0	10899	23216	27481	25564	21309	13683	0	0	122151
KWH/KW DEMAND:	0.0	0.0	0.0	0.0	109.9	112.4	129.1	120.3	107.9	89.1	0.0	0.0	
ENERGY CHGS($):	0	0	0	0	272	663	812	745	596	342	0	0	3429
SUM-ON-P USE: TIME-OF-USE													
METERED ENERGY:	0	0	0	0	6452	14171	16762	15697	12777	7481	0	0	
BILLING ENERGY:	0	0	0	0	6452	14171	16762	15697	12777	7481	0	0	73340
KWH/KW DEMAND:	0.0	0.0	0.0	0.0	108.9	111.3	124.0	115.8	107.2	87.0	0.0	0.0	
ENERGY CHGS($):	0	0	0	0	290	638	772	713	575	337	0	0	3325
TOTAL ENERGY:	37028	33090	35881	34149	33969	37386	44243	41261	34085	33404	33329	35076	432902
TOTAL CHARGES ($):	1198	1055	1157	1096	1053	1300	1584	1458	1171	1041	1064	1127	14304

OFFICE BUILDING & DELI/RESTAURANT ELECTROCHROMIC GLAZING IN ATRIUM DOE-2.1E-001 Wed Nov 10 15:17:48 1993EDL RUN 3
VAV SYSTEM IN OFFICE & PSZ IN ATRIUM GAS ENGINE DRIVEN CHILLER & HEAT RECY SAMP3.INP RUN 3
REPORT- ES-E SUMMARY OF UTILITY-RATE: GAS-COST

UTILITY-RATE: GAS-COST RESOURCE: NATURAL-GAS DEMAND-WINDOW: HOUR 100000. BTU/THERM
METERS: 1 2 3 4 5 BILLING-DAY: 31 RATE-LIMITATION: 0.0000

RATE-QUALIFICATIONS

MIN-ENERGY: 0.0
MAX-ENERGY: 0.0
MIN-DEMAND: 0.0
MAX-DEMAND: 0.0
QUALIFY-RATE: ALL-MONTHS
USE-MIN-QUAL: NO

BLOCK-CHARGES DEMAND-RATCHETS MIN-MON-RATCHETS

MONTH	METERED ENERGY THERM	BILLING ENERGY THERM	METERED DEMAND THERMS	BILLING DEMAND THERMS	ENERGY CHARGE ($)	DEMAND CHARGE ($)	ENERGY CST ADJ ($)	TAXES ($)	SURCHRG ($)	FIXED CHARGE ($)	MINIMUM CHARGE ($)	VIRTUAL RATE ($/UNIT)	TOTAL CHARGE ($)
JAN	4166	4166	12.8	12.8	2499	0	0	0	0	0	0	0.6000	2499
FEB	3521	3521	11.3	11.3	2112	0	0	0	0	0	0	0.6000	2112
MAR	2730	2730	10.7	10.7	1638	0	0	0	0	0	0	0.6000	1638
APR	1385	1385	6.8	6.8	831	0	0	0	0	0	0	0.6000	831
MAY	891	891	4.5	4.5	535	0	0	0	0	0	0	0.6000	535
JUN	962	962	4.7	4.7	577	0	0	0	0	0	0	0.6000	577
JUL	1420	1420	6.0	6.0	852	0	0	0	0	0	0	0.6000	852
AUG	1157	1157	5.2	5.2	694	0	0	0	0	0	0	0.6000	694
SEP	806	806	4.2	4.2	484	0	0	0	0	0	0	0.6000	484
OCT	1161	1161	6.0	6.0	697	0	0	0	0	0	0	0.6000	697
NOV	2317	2317	7.8	7.8	1390	0	0	0	0	0	0	0.6000	1390
DEC	3455	3455	9.2	9.2	2073	0	0	0	0	0	0	0.6000	2073
TOTAL	23971	23971	12.8		14382	0	0	0	0	0		0.6000	14382

L D L P R O C E S S O R I N P U T D A T A

Wed Nov 10 15:17:48 1993LDL RUN 4

```
*1455 * TITLE LINE-1 * OFFICE BUILDING & OPEN ATRIA *
*1456 *       LINE-2 * VAV SYSTEM IN OFFICE & PSZ IN ATRIA *
*1457 *       LINE-3 * ICE THERMAL ENERGY STORAGE FOR OFFICE *
*1458 *       LINE-4 * STORAGE PRIORITY *
*1459 *       LINE-5 * SAMP3.INP  RUN 4  *  ..
*1460 *
*1461 *                ABORT               ERRORS   ..
*1462 *                DIAGNOSTIC          WARNINGS    ..
*1463 *                RUN-PERIOD          JUL 4 1986 THRU JUL 11 1986  $  JUL 4TH
*1464 *                                      $ FALLS ON A FRIDAY PROVIDING A 3DAY
*1465 *                                      $ HOLIDAY WEEKEND
*1466 *                                    JAN 1 1986 THRU JAN 5 1986
*1467 *                                    JAN 1 1986  THRU  DEC 31 1986  ..
*1468 *                BUILDING-LOCATION   LATITUDE=42  LONGITUDE=88
*1469 *                                    TIME-ZONE=6  ALTITUDE=610 ..
*1470 *
*1471 *                LOADS-REPORT        SUMMARY=(LS-D) ..
*1472 *
*1473 *                     $ BUILDING DESCRIPTION
*1474 *
*1475 * $ STRUCTURE   REINFORCED CONCRETE CONSTRUCTION WITH 4IN CONCRETE FLOORS AND ROOF
*1476 * $             10FT FLOOR TO FLOOR HEIGHT, TWO STORIES HIGH.  RETURN AIR PLENUMS
*1477 * $             ARE NOT DEFINED.
*1478 *
*1479 * $ WALLS       USING CODE WORDS FROM THE DOE-2 LIBRARY (REFERENCE MANUAL PART 2)
*1480 * $             AND STARTING WITH THE OUTSIDE SURFACE AND MOVING INWARD:
*1481 * $                2IN PRECAST CONCRETE PANEL (CC03); 2IN POLYSTRENE INSULATION
*1482 * $                R-8 (IN35); 3IN AIRSPACE (AL21); 5/8IN GYPSUM BOARD (GP04);
*1483 * $                3/4IN FINISH PLASTER.
*1484 *
*1485 * $ ATRIUM ROOF BUILT-UP ROOFING (BR01); 3IN ROOF INSULATION R-8 (IN76);
*1486 * $             6IN CONCRETE (CC04); INSIDE FILM RESISTANCE .76
*1487 *
*1488 * $ OFFICE ROOF BUILT-UP ROOFING (BR01); 3IN ROOF INSULATION R-8 (IN76);
*1489 * $             2 FT AIR SPACE (AL33); 3/4IN LAY-IN ACCOUSTIC TILE (AC03);
*1490 * $             INSIDE-FILM-RESISTANCE .76.
*1491 *
*1492 * $ FLOORS      FIRST FL IS SLAB-ON-GRADE EFFECTIVE U-VALUE OF ENTIRE AREA .05.
*1493 *
*1494 * $ WINDOWS     OFFICE AREA 4FT HIGH AND FULL WIDTH OF EACH WALL, EXCEPT SOUTH
*1495 * $             WALL WHERE THERE ARE NO WINDOWS.  GLASS IS DOUBLE PANE TINTED
*1496 * $             WITH A SOLAR TRANSMITTANCE OF .53. WINDOWS HAVE INSIDE DRAPES
*1497 * $             THAT HAVE A PROBABILITY OF.7 OF BEING PULLED WHEN TRANSMITTED
*1498 * $             DIRECT RADIATION IS GREATER THAN 40 BTUH.  DRAPES ARE THEN REOPEN-
*1499 * $             ED WITH A PROBABILITY OF .2 WHENEVER SOLAR DROPS BELOW 40BTUH.
*1500 * $             ATRIUM GLASS IS THE SAME AS OFFICE GLASS EXCEPT THAT IT DOES NOT
*1501 * $             HAVE DRAPES.  THERE ARE TWO MAIN SECTIONS OF GLASS 29' WIDE BY
*1502 * $             30' HIGH WITH OVERHANGS AND SIDE FINS.  NOTICE THAT THE SKETCH
*1503 * $             OF THE BUILDING INDICATES A LARGE OVERHANG WHICH WOULD BE VERY
*1504 * $             DIFFICULT TO BUILD.  THIS WAS THE WAY IT WAS SIMULATED AS THIS
*1505 * $             METHOD IS EQUIVALENT TO MULTIPLE SURFACES THAT PROVIDE THE SAME
*1506 * $             SHADING GEOMETRY.
*1507 *
*1508 * $ INTERIORS   CEILINGS ARE SIMULATED AS PART OF THE ROOF STRUCTURE ON THE TOP
*1509 * $             FLOOR.  PARTITIONS SIMULATE A GLASS WALL BETWEEN ATRIUM AND
*1510 * $             OFFICE SPACES, BUT WALLS BETWEEN INTERIOR AND EXTERIOR OFFICES
*1511 * $             ARE NOT DEFINED.  WALLS BETWEEN THE EQUIPMENT ROOM AND OFFICES
```

```
*1512 * $              HAVE A U-VALUE OF .28.
*1513 *
*1514 * $ SPACE LOADS LIGHTING IS RECESSED FLUORSCENT NON VENTED AT 1.5 WATTS/SQFT
*1515 * $              IN THE OFFICES AND 1 WATT/SQFT IN THE ATRIUM.
*1516 * $              PEOPLE IN OFFICES IS INPUT AT 150SQFT/PERSON.
*1517 * $              PEOPLE IN ATRIUM ARE SIX.
*1518 * $              INFILTRATION IS SET AT 1 AIRCHANGES/HR WHEN FANS ARE OFF AND AT
*1519 * $              .1 AIRCHANGE WHEN FANS ARE ON.
*1520 * $              EQUIPMENT IN OFFICES IS SET AT 1 WATTS/SQFT.
*1521 *
*1522 * $ CHICAGO DESIGN DAY - WORST CASE FOR TES SYSTEM - JULY 4TH WEEKEND THAT SPANS
*1523 * $              A 7 DAY HOT SPELL - HEAVY SMOG - 10F DROP IN TEMPERATURE AT NIGHT
*1524 * $              WHICH COMPARES TO 20F NORMALLY AND MINIMIZES RELEASE OF HEAT BY
*1525 * $              CONVECTION AND RERADIATION.
*1526 *
*1527 *   HOT-SMOG-SUMMER = DESIGN-DAY
*1528 *              DRYBULB-HI   = 98    DRYBULB-LO = 86
*1529 *              HOUR-HI      = 15    HOUR-LO    = 7
*1530 *              DEWPT-HI     = 65.5  DEWPT-LO   = 60
*1531 *              DHOUR-HI     = 16    DHOUR-LO   = 8
*1532 *              WIND-SPEED   = 7.5   WIND-DIR   = 10
*1533 *              CLOUD-AMOUNT = 0     CLOUD-TYPE = 0
*1534 *              CLEARNESS    = 1     GROUND-T = 61  ..
*1535 *
*1536 *  COLD-CLOUDY-WINTER = DESIGN-DAY
*1537 *              DRYBULB-HI   = 6     DRYBULB-LO = -4
*1538 *              HOUR-HI      = 15    HOUR-LO    = 2
*1539 *              DEWPT-HI     = 6     DEWPT-LO   = -4
*1540 *              DHOUR-HI     = 16    DHOUR-LO   = 3
*1541 *              WIND-SPEED   = 15    WIND-DIR   = 14
*1542 *              CLOUD-AMOUNT = 5     CLOUD-TYPE = 2
*1543 *              CLEARNESS    = 1     GROUND-T = 46  ..
*1544 *
*1545 *
*1546 *                      $ CONSTRUCTIONS
*1547 *
*1548 * ROOF-O       =LAYERS              MAT=(BR01,IN76,CC03,AL33,AC03)  I-F-R=.76 ..
*1549 * ROOF-A       =LAYERS              MAT=(BR01,IN76,CC04)  I-F-R .76  ..
*1550 * OFF-ROF     =CONSTRUCTION        LAYERS ROOF-O  ..
*1551 * ATR-ROF     =CONSTRUCTION        LAYERS ROOF-A  ..
*1552 * WALL-1      =LAYERS              MAT=(CC33,IN35,AL21,GP04,GP04)  ..
*1553 * WL1         =CONSTRUCTION        LAYERS=WALL-1  ..
*1554 * BW1         =CONSTRUCTION        U=.05 ..
*1555 * BW2         =CONSTRUCTION        U=.0001   ..
*1556 * WL2         =CONSTRUCTION        U=1.05   $ ATRIUM GLASS PARTITIONS $  ..
*1557 * WL3         =CONSTRUCTION        U=.28    $ INTERIOR PARTITIONS $  ..
*1558 *
*1559 *                    $ GLASS DESCRIPTION
*1560 *
*1561 * GT1         =GLASS-TYPE   GLASS-TYPE-CODE 5  PANES 2  ..
*1562 * GT2         =GLASS-TYPE   G-T-C 5  PANES 2  ..
*1563 *
*1564 *                    $ SCHEDULES
*1565 *
*1566 * OC1         =DAY-SCHEDULE        (1,9) (0)  (10,12) (1)  (13,14) (.8)
*1567 *                                  (15,18) (.9)  (19,24) (.1)   ..
*1568 * OC2         =DAY-SCHEDULE        (1,24) (.1)  ..
*1569 * OCCUP       =SCHEDULE            THRU DEC 31 (WD) OC1  (WEH) OC2  ..
*1570 *
*1571 * L1          =DAY-SCHEDULE        (1,6) (.05)  (7,12) (.9)  (13,14) (.8)
*1572 *                                  (15,18) (.9)  (19,21) (.2)  (22,24) (.05)  ..
*1573 * L2          =DAY-SCHEDULE        (1,24) (.05)  ..
*1574 * LT1         =SCHEDULE            THRU DEC 31 (WD) L1  (WEH) L2  ..
*1575 *
*1576 * ES1         =DAY-SCHEDULE        (1,9) (0)  (10,21) (.9)  (22,24) (0)  ..
```

```
*1577 * ES2          =DAY-SCHEDULE        (1,24) (0)  ..
*1578 * EQ1          =SCHEDULE            THRU DEC 31 (WD) ES1  (WEH) ES2  ..
*1579 *
*1580 * I1           =DAY-SCHEDULE        (1,9) (1)  (10,21) (.1)  (22,24) (1)  ..
*1581 * I2           =DAY-SCHEDULE        (1,24) (1)  ..
*1582 * INFIL        =SCHEDULE            THRU DEC 31 (WD) I1  (WEH) I2  ..
*1583 *
*1584 *
*1585 * SHADE-MULT   =SCHEDULE            THRU DEC 31 (ALL) (1,24) (.6)  ..
*1586 * COND-MULT    =SCHEDULE            THRU DEC 31 (ALL) (1,24) (.90)  ..
*1587 * CLOSE-SHADE  =SCHEDULE            THRU DEC 31 (ALL) (1,24) (40)  ..
*1588 * REOPEN-PROB  =SCHEDULE            THRU DEC 31 (ALL) (1,24) (.2)  ..
*1589 *
*1590 *                 $ SET DEFAULTS
*1591 *
*1592 *          SET-DEFAULT FOR  EXTERIOR-WALL  HEIGHT=10  AZIMUTH=180
*1593 *                                          CONSTRUCTION=WL1  ..
*1594 *          SET-DEFAULT FOR  WINDOW         HEIGHT=4   Y=4  GLASS-TYPE=GT1
*1595 *                           MAX-SOLAR-SCH=CLOSE-SHADE   SUN-CTRL-PROB .7
*1596 *                           WIN-SHADE-TYPE=MOVABLE-INTERIOR
*1597 *                           SHADING-SCHEDULE=SHADE-MULT
*1598 *                           CONDUCT-SCHEDULE=COND-MULT
*1599 *                           OPEN-SHADE-SCH=REOPEN-PROB  ..
*1600 *
*1601 *                 $ SPACE DESCRIPTION
*1602 *
*1603 * OFFICE       =SPACE-CONDITIONS    TEMPERATURE=(74)  FLOOR-WEIGHT=70
*1604 *                                   EQUIPMENT-W/SQFT=1  EQUIP-SCHEDULE=EQ1
*1605 *                                   LIGHTING-W/SQFT=1.5  LIGHTING-SCHEDULE=LT1
*1606 *                                   INF-METHOD=AIR-CHANGE  AIR-CHANGES/HR=.2
*1607 *                                   INF-SCHEDULE=INFIL LIGHTING-TYPE=SUS-FLUOR
*1608 *                                   PEOPLE-HG-LAT=200  PEOPLE-HG-SENS=250
*1609 *                                   PEOPLE-SCHEDULE=OCCUP  AREA/PERSON=150 ..
*1610 *
*1611 * ATRIUM       =SPACE-CONDITIONS    TEMPERATURE=(74)  FLOOR-WEIGHT=100
*1612 *                                   LIGHTING-SCHEDULE=LT1
*1613 *                                   LIGHTING-TYPE=INCAND
*1614 *                                   LIGHTING-W/SQFT=1
*1615 *                                   NUMBER-OF-PEOPLE=6
*1616 *                                   PEOPLE-HEAT-GAIN= 550
*1617 *                                   PEOPLE-SCHEDULE = OCCUP
*1618 *                                   INF-SCHEDULE=INFIL  AIR-CHANGES/HR=.2
*1619 *                                   INF-METHOD=AIR-CHANGE   ..
*1620 *
*1621 * BZ1          =SPACE               S-C=OFFICE  AREA=3230  VOLUME=29070
*1622 *                                   AZ=90  Y=200  ..
*1623 *
*1624 * E1           =EXTERIOR-WALL       WIDTH=200  ..
*1625 * W1           =WINDOW              WIDTH=200  ..
*1626 *
*1627 * E1S          =EXTERIOR-WALL       W=17  AZ=90  X=200  ..
*1628 *
*1629 *               UNDERGROUND-FLOOR   AREA=3230  CONS=BW1  ..
*1630 *
*1631 * BZ2          =SPACE               S-C=OFFICE  AREA=1660 VOLUME=14940
*1632 *                                   AZ=180  X=100  Y=200  ..
*1633 *
*1634 * E2           =EXTERIOR-WALL       WIDTH=100  ..
*1635 * W2           =WINDOW              WIDTH=100  ..
*1636 *
*1637 *               UNDERGROUND-FLOOR   AREA=1660  CONS=BW1  ..
*1638 *
*1639 * BZ3          =SPACE               LIKE BZ1  AZ=-90  X=100  Y=0  ..
*1640 *
*1641 * E3           =EXTERIOR-WALL       LIKE E1  ..
```

```
*1642 * W3          =WINDOW              LIKE W1  ..
*1643 *
*1644 * E3S         =EXTERIOR-WALL       W=17  AZ=270  Y=17  ..
*1645 *
*1646 *              UNDERGROUND-FLOOR   AREA=3230  CONS=BW1  ..
*1647 *
*1648 * TZ1         =SPACE               LIKE BZ1  Z=10  ..
*1649 *
*1650 * R1          =ROOF                H=17  W=200  AZ=180  TILT=0  Z=10
*1651 *                                  CONS=OFF-ROF  ..
*1652 *
*1653 *              EXTERIOR-WALL       LIKE E1  ..
*1654 *              WINDOW              LIKE W1  ..
*1655 *
*1656 *              EXTERIOR-WALL       LIKE E1S  ..
*1657 *
*1658 * TZ2         =SPACE               LIKE BZ2  Z=10  ..
*1659 *
*1660 *              ROOF                LIKE R1  H=20  W=83  ..
*1661 *
*1662 *              EXTERIOR-WALL       LIKE E2  ..
*1663 *              WINDOW              LIKE W2  ..
*1664 *
*1665 *
*1666 * TZ3         =SPACE               LIKE BZ3  Z=10  ..
*1667 *              ROOF                LIKE R1  H=17  W=180  ..
*1668 *              EXTERIOR-WALL       LIKE E3  ..
*1669 *              WINDOW              LIKE W3  ..
*1670 *              EXTERIOR-WALL       LIKE E3S  ..
*1671 *
*1672 * IZ1         =SPACE               S-C=OFFICE  AREA=3540 VOLUME=70800
*1673 *                                  AZ=90  X=17  Y=180  ..
*1674 *
*1675 * IN1         =INTERIOR-WALL       AREA=1200  NEXT-TO ATZ1  CONS=WL2  ..
*1676 * IN2         =INTERIOR-WALL       AREA=1200  NEXT-TO ATZ2  CONS=WL2 ..
*1677 * IN3         =INTERIOR-WALL       AREA=586  NEXT-TO EQUIP-RM  CONS=WL3 ..
*1678 *              ROOF                LIKE R1  H=18  W=180  Z=20  ..
*1679 *              ROOF                LIKE R1  H=15  W=20  Y=18  Z=20  ..
*1680 *              EXTERIOR-WALL       H=20  W=18  AZ=90  X=180  ..
*1681 *              UNDERGROUND-FLOOR   AREA=3540  CONS=BW1  ..
*1682 *
*1683 * IZ2         =SPACE               LIKE IZ1  AZ=-90  X=83  Y=0  ..
*1684 *
*1685 *              INTERIOR-WALL       LIKE IN1  NEXT-TO ATZ1  ..
*1686 *              INTERIOR-WALL       LIKE IN2  NEXT-TO ATZ2  ..
*1687 *              INTERIOR-WALL       LIKE IN3  ..
*1688 *              EXTERIOR-WALL       H=20  W=18  AZ=270  Y=18  ..
*1689 *              ROOF                LIKE R1  H=18  W=180  Z=20  ..
*1690 *              ROOF                LIKE R1  H=15  W=20  X=160  Y=18  Z=20  ..
*1691 *              UNDERGROUND-FLOOR   AREA=3540  CONS=BW1  ..
*1692 *
*1693 * ATZ1        =SPACE               S-C=ATRIUM  AREA=1800  VOLUME=16200
*1694 *                                  X=35  Y=40  ..
*1695 *
*1696 * ATROOF-1    =ROOF                HEIGHT=66.6  WIDTH=30
*1697 *                                  AZIMUTH=0  TILT=26  X=30  Y=60  Z=20
*1698 *                                  CONS=ATR-ROF  ..
*1699 * E4          =EXTERIOR-WALL       H=14.5  W=60  AZ=270  Y=60  Z=20  ..
*1700 * E5          =EXTERIOR-WALL       LIKE E4  AZ=90  X=30  Y=0  ..
*1701 * F1          =UNDERGROUND-FLOOR   AREA=1800  CONS=BW2  ..
*1702 * FRAME-A     =EXTERIOR-WALL       HEIGHT=29  WIDTH=30  Z=20  ..
*1703 * WINDOW-A    =WINDOW              H=28.9  W=29.9  X=.05  Y=.05  GLASS-TYPE=GT2
*1704 *                                  OVERHANG-A=6  OH-B=0  OH-D=48.5  OH-W=42
*1705 *                                  OVERHANG-ANGLE=116  LEFT-FIN-A=0  L-F-B=0
*1706 *                                  L-F-H=30  L-F-D=3  RIGHT-FIN-A=0  R-F-B=0
```

```
*1707 *                                  R-F-H=30  R-F-D=3 ..
*1708 *                EXTERIOR-WALL     LIKE FRAME-A  HEIGHT=10.7  W=30  Z=9.3 ..
*1709 *                WINDOW            LIKE WINDOW-A  H=10.6  W=29.9  L-F-H=10.7
*1710 *                                                R-F-H=10.7  ..
*1711 *
*1712 * ATZ2          =SPACE             LIKE ATZ1  SOURCE-BTU/HR=0.0  Y=100  ..
*1713 *
*1714 * ATROOF-2      =ROOF              LIKE ATROOF-1  ..
*1715 *                EXTERIOR-WALL     LIKE E4  ..
*1716 *                EXTERIOR-WALL     LIKE E5  ..
*1717 *                UNDERGROUND-FLOOR LIKE F1  ..
*1718 * FRAME-B       =EXTERIOR-WALL     LIKE FRAME-A  ..
*1719 * WINDOW-B      =WINDOW            LIKE WINDOW-A  ..
*1720 *
*1721 * EQUIP-RM      =SPACE             ZONE-TYPE=UNCONDITIONED
*1722 *                                  AREA=1200  VOLUME=17580  X=35  ..
*1723 *
*1724 *                EXTERIOR-WALL     HEIGHT=20  WIDTH=30  ..
*1725 *
*1726 *                ROOF              H=41.2  W=30  CONS=OFF-ROF
*1727 *                                  TILT=15  Z=9.3  X=30  Y=40  AZIMUTH=0 ..
*1728 *
*1729 *                INTERIOR-WALL     AREA=279  CONS=WL3  NEXT-TO ATZ1 ..
*1730 *                UNDERGROUND-FLOOR AREA=1200  CONS=BN1  ..
*1731 *
*1732 *
*1733 * END  ..
*1734 * COMPUTE LOADS  ..
*1735 * INPUT SYSTEMS  ..
```

```
*1736 * SYSTEMS-REPORT  SUMMARY (SS-D,SS-A,SS-J)  ..
*1737 *
*1738 *                 $ ALL ELECTRIC HVAC SYSTEMS DESCRIPTION
*1739 *
*1740 * $ DESIGN TEMPS  ATRIUM  COOLING 80F-SUMMER, 68F-WINTER   HEATING SETBACK 65F
*1741 * $               OFFICE  COOLING 76F   HEATING 72F
*1742 *
*1743 * $ SYSTEM TYPE   THE OFFICE IS SERVED BY A VAVS SYSTEM WITH THE BASEBOARD
*1744 * $               THERMOSTATICALLY CONTROLLED AND HAS AN DRYBULB ECONOMIZER
*1745 * $               WITH A 68F DRYBULB-LIMIT.  THIS SYSTEM OPERATES FROM 7AM
*1746 * $               TO 6PM ON WEEKDAYS DURING SPRING, FALL, AND WINTER.  HOWEVER,
*1747 * $               IN SUMMER IT OPERATES ON SUNDAY AFTERNOON TO MITIGATE THE
*1748 * $               MONDAY MORNING STARTUP LOAD, ESPECIALLY AFTER A HOT WEEKEND.
*1749 *
*1750 * $               THE OPEN ATRIA IS SERVED BY 1 PKG VARIABLE TEMPERATURE -
*1751 * $               CONSTANT VOLUME SYSTEM (PSZ) WITH AIR/AIR HEAT PUMP.  THE
*1752 * $               PSZ SYSTEM HAS AN ECONOMIZER WITH ENTHALPY-LIMIT, PLUS
*1753 * $               A DRYBULB-LIMIT AND AN ECONO-LOCKOUT WHICH PROTECTS
*1754 * $               THE COMPRESSOR FROM BURNOUT ON LOW EVAPORATOR LOADING.
*1755 * $               THE HEAT PUMP DEFROST-TYPE IS REVERSE-CYCLE AND CONTROLLED
*1756 * $               BY ON-DEMAND.
*1757 *
*1758 *                      $ AIR HANDLING UNIT SCHEDULES
*1759 *
*1760 * NORM-DAYS     = WEEK-SCHEDULE (WD)  (1,5)(0)(6,7)(-999)(8,21)(1)(22,24)(0)
*1761 *                               (WEH)  (1,24)(0)  ..
*1762 * PSZ-SCHED     = SCHEDULE      THRU DEC 31 NORM-DAYS  ..
*1763 *
*1764 * SUMM-DAYS     = WEEK-SCHEDULE (WD)  (1,7)(0)  (8,18)(1)  (19,24)(0)
*1765 *                               (SAT)  (1,24)(0)
*1766 *                               (SUN)  (1,14)(0)  (15,18)(1)  (19,24)(0)
*1767 *                               (HOL)  (1,24)(0)  ..
*1768 *
*1769 * VAVS-SCHED    = SCHEDULE      THRU MAY 15 NORM-DAYS
*1770 *                               THRU OCT 20  SUMM-DAYS
*1771 *                               THRU DEC 31 NORM-DAYS  ..
*1772 *
*1773 * NORM-OA       = WEEK-SCHEDULE (WD)  (1,7)(0)(8,21)(-999)(22,24)(0)
*1774 *                               (WEH)  (1,24)(0)  ..
*1775 *
*1776 * SUMM-OA       = WEEK-SCHEDULE (WD)  (1,7)(0)  (8,18)(-999)  (19,24)(0)
*1777 *                               (SAT)  (1,24)(0)
*1778 *                               (SUN)  (1,15)(0)  (16,19)(-999)  (20,24)(0)
*1779 *                               (HOL)  (1,24)(0)  ..
*1780 *
*1781 * MIN-OA     = SCHEDULE        THRU MAY 15 NORM-OA
*1782 *                               THRU OCT 20 SUMM-OA
*1783 *                               THRU DEC 31 NORM-OA  ..
*1784 *
*1785 *
*1786 *                      $ HEATING THERMOSTAT SCHEDULE
*1787 *
*1788 * THEAT1     = SCHEDULE THRU DEC 31 (WD)  (1,7)(60)(8,9)(64)(10,21)(68)(22,24)(60)
*1789 *                                    (WEH)  (1,24)(60)  ..
*1790 *
*1791 * THEAT2     = SCHEDULE THRU DEC 31 (ALL)  (1,24)(72)  ..
*1792 *
```

```
*1793 *                    $ COOLING THERMOSTAT SCHEDULES
*1794 *
*1795 * TCOOL1    = SCHEDULE THRU DEC 31 (WD) (1,7)(90)(8,21)(80)(22,24)(90)
*1796 *                                  (WEH) (1,24)(90)  ..
*1797 *
*1798 * TCOOL2    = SCHEDULE THRU DEC 31 (ALL) (1,24)(76)  ..
*1799 *
*1800 *
*1801 *                         $ ZONE DESCRIPTION
*1802 *
*1803 * ENV-ATR       = ZONE-CONTROL  DESIGN-HEAT-T=68  DESIGN-COOL-T=74
*1804 *                               HEAT-TEMP-SCH=THEAT1  COOL-TEMP-SCH=TCOOL2
*1805 *                               T-TYPE PROPORTIONAL ..
*1806 *
*1807 * ENV-OFF       = ZONE-CONTROL  DESIGN-HEAT-T=72  DESIGN-COOL-T=74
*1808 *                               HEAT-TEMP-SCH=THEAT1  COOL-TEMP-SCH=TCOOL1
*1809 *                               T-TYPE=REVERSE-ACTION
*1810 *                               BASEBOARD-CTRL=THERMOSTATIC ..
*1811 *
*1812 * ATZ1          = ZONE          Z-C ENV-ATR  OUTSIDE-AIR-CFM 250  ..
*1813 *
*1814 * ATZ2          = ZONE          Z-C ENV-ATR  OUTSIDE-AIR-CFM 250  ..
*1815 *
*1816 * EQUIP-RM      = ZONE          ZONE-TYPE=UNCONDITIONED ..
*1817 *
*1818 * BZ1           = ZONE          Z-C ENV-OFF  OA-CFM/PER=15  B-R=-90000 ..
*1819 * BZ2           = ZONE  LIKE BZ1 B-R=-37000  ..
*1820 * BZ3           = ZONE  LIKE BZ1 B-R=-100000  ..
*1821 * TZ1           = ZONE  LIKE BZ1 B-R=-94000  ..
*1822 * TZ2           = ZONE  LIKE BZ1 B-R=-40000  ..
*1823 * TZ3           = ZONE  LIKE BZ1 B-R=-104000  ..
*1824 * IZ1           = ZONE  LIKE BZ1 B-R=-54000  ..
*1825 * IZ2           = ZONE  LIKE BZ1 B-R=-54000  ..
*1826 *
*1827 * FS-SYS1       = SYSTEM        SYSTEM-TYPE=PSZ  MAX-S-T=100  MIN-S-T=55
*1828 *                               SUPPLY-STATIC=3  SUPPLY-EFF=.45  ECONO-LOCKOUT=YES
*1829 *                               ENTHALPY-LIMIT=25  DRYBULB-LIMIT=74
*1830 *                               HEAT-SOURCE=HEAT-PUMP
*1831 *                               FAN-SCHEDULE=PSZ-SCHED
*1832 *                               MIN-AIR-SCH =MIN-OA
*1833 *                               DEFROST-TYPE=REVERSE-CYCLE
*1834 *                               DEFROST-CTRL=ON-DEMAND
*1835 *                               ZONE-NAMES = (ATZ1,ATZ2,EQUIP-RM)  ..
*1836 *
*1837 * OFF-SYS       = SYSTEM        SYSTEM-TYPE=VAVS  MAX-S-T=120  MIN-S-T=60
*1838 *                               SUPPLY-STATIC=5  SUPPLY-EFF=.55  ECONO-LIMIT-T=68
*1839 *                               FAN-SCHEDULE=VAVS-SCHED  MIN-CFM-RATIO=.3
*1840 *                               FAN-CONTROL=SPEED  HEAT-SET-T=100
*1841 *                               RETURN-AIR-PATH=DUCT  OA-CONTROL=TEMP
*1842 *                               N-C-C=STAY-OFF  REHEAT-DELTA-T=55
*1843 *                               ZONE-HEAT-SOURCE=ELECTRIC
*1844 *                               PREHEAT-SOURCE=ELECTRIC  HEAT-SOURCE=ELECTRIC
*1845 *                               MIN-AIR-SCH=MIN-OA  BASEBOARD-SOURCE=ELECTRIC
*1846 *                               ZONE-NAMES=(BZ1,BZ2,BZ3,TZ1,TZ2,TZ3,IZ1,IZ2) ..
*1847 * PLANT1 = PLANT-ASSIGNMENT  SYSTEM-NAMES = (FS-SYS1,OFF-SYS)
*1848 *                           DHW-SIZE     = 0
*1849 *                           DHW-GAL/MIN  = .888
*1850 *                           DHW-SCH      = DOMHW  ..
*1851 *
*1852 * D1 = D-SCH (1,7) (0)  (8,21) (.1,.2,.3,.4,.55,.6,.6,.65,.4,.45,.45,.4,.3,.3)
*1853 *                       (22,24) (0)  ..
*1854 * D2 = D-SCH (1,7) (0)  (8,22) (.15,.2,.25,.4,.5,.55,.55,.45,.45,.45,.45,.4,.35,
*1855 *                               .25,.2)  (23,24) (0)  ..
*1856 * D3 = D-SCH (1,9) (0)  (10,19) (.1,.25,.3,.35,.35,.3,.3,.35,.3,.2)
*1857 *                       (20,24) (0)  ..
```

```
°1858 ° DOMHW = SCH THRU DEC 31 (WD) D1  (SAT) D2  (SUN,HOL) D3  ..
°1859 ° END  ..
°1860 ° COMPUTE SYSTEMS  ..
°1861 ° INPUT PLANT  ..
```

P D L P R O C E S S O R I N P U T D A T A

Wed Nov 10 15:17:48 1993PDL RUN 4

```
*1862 * PLANT1 = PLANT-ASSIGNMENT  ..
*1863 * PLANT-REPORT        SUMMARY=(PS-A,PS-B,PS-C,PS-G,BEPS) ..
*1864 *
*1865 *          $ EQUIPMENT DESCRIPTION
*1866 *
*1867 *
*1868 * $ THIS PLANT IS AN ICE STORAGE PLANT WITH A SINGLE RECIPROCATING
*1869 * $ COMPRESSOR WHICH CAN MAKE ICE AT NIGHT BUT OPERATES DURING THE DAY
*1870 * $ AT NORMAL EVAPORATOR TEMPERATURES.  THE COMPRESSOR'S RATED CAPACITY
*1871 * $ IS AUTOMATICALLY SIZED BY THE PROGRAM AS WELL AS THE STORAGE CAPACITY
*1872 * $ (WHICH IS IN MBTU - NOT TON HOURS).  THE TES SYSTEM IS STORAGE PRIORITY
*1873 * $ AND THE TANK IS SIZED TO HOLD 65% OF THE PEAK DAILY INTEGRATED LOAD
*1874 * $ BASED ON THE RESULTS OF THE WEATHER TAPE RUN.
*1875 *
*1876 * ICEM     =PLANT-EQUIPMENT   TYPE=OPEN-REC-CHLR  SIZE=-999 I-N=1  ..
*1877 *
*1878 * DHWH     =PLANT-EQUIPMENT     TYPE=ELEC-DHW-HEATER  SIZE -999  ..
*1879 *
*1880 * CTANK    =PLANT-EQUIPMENT  TYPE=CTANK-STORAGE  SIZE=-999   I-N=1  ..
*1881 *
*1882 * ENERGY-STORAGE  COOL-STORE-RATE=-999
*1883 *                 COOL-SUPPLY-RATE=-999
*1884 *                 COOL-STORE-SCH=TANK-CHG
*1885 *                 CTANK-LOSS-COEF=100
*1886 *                 CTANK-BASE-T=44
*1887 *                 CTANK-T-RANGE=10  ..
*1888 *
*1889 * PLANT-PARAMETERS  TES-TYPE  = BRINE  $ TO SIMULATE A REACTOL FLUID
*1890 *                   HOURS-CHARGING = 13
*1891 *                   HOURS-DISCHARGING = 11
*1892 *                   PERCENT-STORED   = 65
*1893 *                   TES-PRIORITY     = STORAGE
*1894 *                   COMP-MODE-DCHG   = RATED-T
*1895 *                   COMP-KW/TON-START = .96
*1896 *                   REFRIG-T-AT-PC = 20
*1897 *                   TWR-CAP-CTRL   = TWO-SPEED
*1898 *                   TWR-PUMP-HEAD   = 20
*1899 *                   PLANT-SIZING-BY = WEATHER  ..
*1900 *
*1901 * TANK-CHG=SCHEDULE THRU JUN 1 (ALL) (1,24) (0)
*1902 *                   THRU SEP 1 (ALL) (1,7) (1) (8,18) (0) (19,24)(1)
*1903 *                   THRU DEC 31 (ALL) (1,24) (0)  ..
*1904 *
*1905 * TANK-CHARGE       LOAD-ASSIGNMENT  TYPE=COOLING
*1906 *                   LOAD-RANGE=99
*1907 *                   PLANT-EQUIPMENT=ICEM   NUMBER=1  ..
*1908 *
*1909 * RELEASE-CHG       LOAD-ASSIGNMENT  TYPE=COOLING
*1910 *                   LOAD-RANGE=99
*1911 *                   PLANT-EQUIPMENT=CTANK  NUMBER=1
*1912 *                   PLANT-EQUIPMENT=ICEM   NUMBER=1  ..
*1913 *
*1914 * NO-STORAGE        LOAD-ASSIGNMENT  TYPE=COOLING
*1915 *                   LOAD-RANGE=99
*1916 *                   PLANT-EQUIPMENT=ICEM   NUMBER=1  ..
*1917 *
*1918 * CHW-CTRL =DAY-ASSIGN-SCH (1,7) (TANK-CHARGE)
```

```
*1919 *                          (8,18) (RELEASE-CHG)
*1920 *                          (19,24) (TANK-CHARGE) ..
*1921 *
*1922 * WEH-CTRL =DAY-ASSIGN-SCH (1,14) (TANK-CHARGE)
*1923 *                          (15,18) (RELEASE-CHG)
*1924 *                          (19,24) (TANK-CHARGE)  ..
*1925 *
*1926 * STD-OPER =DAY-ASSIGN-SCH (1,24) (NO-STORAGE)  ..
*1927 *
*1928 * CHILLER-CTRL=SCHEDULE THRU JUN 1 (ALL) STD-OPER
*1929 *                        THRU OCT 1 (WD) CHW-CTRL (WEH) WEH-CTRL
*1930 *                        THRU DEC 31 (ALL) STD-OPER  ..
*1931 *
*1932 * LOAD-MANAGEMENT  PRED-LOAD-RANGE=999
*1933 *                  ASSIGN-SCHEDULE=(DEFAULT,CHILLER-CTRL,DEFAULT)  ..
*1934 *
*1935 * $                          HOURLY-REPORT INPUT
*1936 *
*1937 * R-SCHED=SCHEDULE  THRU JUL 12 (ALL) (1,24)(0)
*1938 *                   THRU JUL 15 (ALL) (1,24)(1)
*1939 *                   THRU DEC 31 (ALL) (1,24)(0)  ..
*1940 * $
*1941 *   RB5     = REPORT-BLOCK VARIABLE-TYPE=OPEN-REC-CHLR
*1942 *                          VARIABLE-LIST=(1,8,10,16)  ..
*1943 *   RB7     = REPORT-BLOCK VARIABLE-TYPE=CTANK-STORAGE
*1944 *                          VARIABLE-LIST=(1,4,14)  ..
*1945 *   REPORT1 = HOURLY-REPORT REPORT-SCHEDULE=R-SCHED
*1946 *                           REPORT-BLOCK=(RB5,RB7) ..
*1947 *
*1948 * END  ..
*1949 * COMPUTE PLANT  ..
*1950 * INPUT ECONOMICS  ..
```

E D L P R O C E S S O R I N P U T D A T A

Wed Nov 10 15:17:48 1993EDL RUN 4

```
*1951 * DIAGNOSTIC WARNINGS ..
*1952 * ECONOMICS-REPORT  SUMMARY (ES-D,ES-E)  ..
*1953 *
*1954 *                    $ ENERGY CHARGE DESCRIPTION
*1955 *
*1956 * $ THIS ELECTRIC RATE IS A TIME-OF-USE RATE WITH SEPARATE SUMMER/WINTER MINIMUM
*1957 * $ DEMAND CHARGES BUT IN ADDITION HAS S/W DEMAND CHARGES THAT APPLY ONLY TO THE
*1958 * $ ON-PEAK HOURS.  THE TWO DEMANDS ARE ADDITIVE, APPLY TO THE HIGHEST PEAK, BUT
*1959 * $ ONLY THE ON-PEAK CARRIES A RATCHET OF 90%.  THE ENERGY CHARGES ARE
*1960 * $ DOLLARS/KWH FOR THREE PERIODS (I.E. ON-PEAK, INTERMEDIATE-PEAK, AND OFF-PEAK).
*1961 *
*1962 * ELEC-COST    = UTILITY-RATE  RESOURCE = ELECTRICITY
*1963 *                              MIN-MON-CHGS = (186)
*1964 *                              DEMAND-CHGS = (2.25,2.25,2.25,2.25,2.58,
*1965 *                                             2.58,2.58,2.58,2.58,2.58,2.25)
*1966 *                              BLOCK-CHARGES = (SUM-P-DEM,WIN-P-DEM)
*1967 *                              ENERGY-CHG-SCH = TOU-SCH  ..
*1968 *
*1969 * TOU-SCH  = SCHEDULE  THRU APR 30 (WD) (1,8)(.0324)
*1970 *                                      (9,12)(.0354)
*1971 *                                      (13,18)(.0394)
*1972 *                                      (19,21)(.0354)
*1973 *                                      (22,24)(.0354)
*1974 *                                 (WEH)(1,24)(.0354)
*1975 *                      THRU OCT 31 (WD) (1,8)(.0374)
*1976 *                                      (9,12)(.0394)
*1977 *                                      (13,18)(.0444)
*1978 *                                      (19,21)(.0394)
*1979 *                                      (22,24)(.0374)
*1980 *                                 (WEH)(1,24)(.0374)
*1981 *                      THRU DEC 31 (WD) (1,8)(.0324)
*1982 *                                      (9,12)(.0354)
*1983 *                                      (13,18)(.0394)
*1984 *                                      (19,21)(.0354)
*1985 *                                      (22,24)(.0354)
*1986 *                                 (WEH)(1,24)(.0354)  ..
*1987 *
*1988 * SUM-P-DEM = BLOCK-CHARGE  BLOCK-SCH = DEM-SCH
*1989 *                          SCH-FLAG  = 2
*1990 *                          BLOCK1-TYPE = DEMAND
*1991 *                          BLOCK1-DATA = (1,7.00)
*1992 *                          DEMAND-RATCHETS = (SUM-RATCH)  ..
*1993 *
*1994 * WIN-P-DEM = BLOCK-CHARGE  BLOCK-SCH = DEM-SCH
*1995 *                          SCH-FLAG  = 1
*1996 *                          BLOCK1-TYPE = DEMAND
*1997 *                          BLOCK1-DATA = (1,6.50)
*1998 *                          DEMAND-RATCHETS = (SUM-RATCH)  ..
*1999 *
*2000 * SUM-RATCH = RATCHET       NUM-MONTHS = 12
*2001 *                          RATCHET-SCH = DEM-SCH
*2002 *                          SCH-FLAG = 2
*2003 *                          TYPE    = HIGHEST-PEAK
*2004 *                          FRACTION = .90   ..
*2005 *
*2006 * DEM-SCH   = SCHEDULE   THRU APR 30  (WD) (1,12)(0)
*2007 *                                          (13,18)(1)
```

```
*2008 *                                        (19,24)(0)
*2009 *                                  (WEH) (1,24)(0)
*2010 *                        THRU OCT 31  (WD) (1,12)(0)
*2011 *                                        (13,18)(2)
*2012 *                                        (19,24)(0)
*2013 *                                  (WEH) (1,24)(0)
*2014 *                        THRU DEC 31  (WD) (1,12)(0)
*2015 *                                        (13,18)(1)
*2016 *                                        (19,24)(0)
*2017 *                                  (WEH) (1,24)(0)  ..
*2018 *
*2019 * END  ..
*2020 * COMPUTE ECONOMICS  ..
*2021 * STOP  ..
```

OFFICE BUILDING & OPEN ATRIA VAV SYSTEM IN OFFICE & PSZ IN ATRIA DOE-2.1E-001 Wed Nov 10 15:17:48 1993LDL RUN 4
ICE THERMAL ENERGY STORAGE FOR OFFICE STORAGE PRIORITY SAMP3.INP RUN 4
REPORT- LS-D BUILDING MONTHLY LOADS SUMMARY DESIGN DAY WEATHER FILE- TRY CHICAGO

	COOLING						HEATING						ELEC	
MONTH	COOLING ENERGY (MBTU)	TIME OF MAX DY	TIME OF MAX HR	DRY-BULB TEMP	WET-BULB TEMP	MAXIMUM COOLING LOAD (KBTU/HR)	HEATING ENERGY (MBTU)	TIME OF MAX DY	TIME OF MAX HR	DRY-BULB TEMP	WET-BULB TEMP	MAXIMUM HEATING LOAD (KBTU/HR)	ELEC-TRICAL ENERGY (KWH)	MAXIMUM ELEC LOAD (KW)
JAN	0.03641	3	16	6.F	6.F	7.843	-43.032	2	6	-2.F	-2.F	-481.413	1542.	55.710
FEB	0.00000					0.000	0.000					0.000	0.	0.000
MAR	0.00000					0.000	0.000					0.000	0.	0.000
APR	0.00000					0.000	0.000					0.000	0.	0.000
MAY	0.00000					0.000	0.000					0.000	0.	0.000
JUN	0.00000					0.000	0.000					0.000	0.	0.000
JUL	58.44080	11	17	98.F	75.F	521.270	0.000					0.000	3645.	55.710
AUG	0.00000					0.000	0.000					0.000	0.	0.000
SEP	0.00000					0.000	0.000					0.000	0.	0.000
OCT	0.00000					0.000	0.000					0.000	0.	0.000
NOV	0.00000					0.000	0.000					0.000	0.	0.000
DEC	0.00000					0.000	0.000					0.000	0.	0.000
TOTAL	58.477						-43.032						5187.	
MAX						521.270						-481.413		55.710

OFFICE BUILDING & OPEN ATRIA VAV SYSTEM IN OFFICE & PSZ IN ATRIA DOE-2.1E-001 Wed Nov 10 15:17:48 1993LDL RUN 4
ICE THERMAL ENERGY STORAGE FOR OFFICE STORAGE PRIORITY SAMP3.INP RUN 4
REPORT- LS-D BUILDING MONTHLY LOADS SUMMARY WEATHER FILE- TRY CHICAGO

	COOLING						HEATING						ELEC	
MONTH	COOLING ENERGY (MBTU)	TIME OF MAX DY	TIME OF MAX HR	DRY-BULB TEMP	WET-BULB TEMP	MAXIMUM COOLING LOAD (KBTU/HR)	HEATING ENERGY (MBTU)	TIME OF MAX DY	TIME OF MAX HR	DRY-BULB TEMP	WET-BULB TEMP	MAXIMUM HEATING LOAD (KBTU/HR)	ELEC-TRICAL ENERGY (KWH)	MAXIMUM ELEC LOAD (KW)
JAN	7.94325	31	16	30.F	23.F	177.351	-129.777	1	7	-1.F	-1.F	-429.312	15846.	55.710
FEB	9.50615	28	15	52.F	42.F	176.826	-111.003	4	6	7.F	6.F	-379.896	13742.	55.710
MAR	22.15135	3	17	78.F	61.F	265.525	-82.148	24	6	8.F	7.F	-398.359	15191.	55.710
APR	54.60360	28	15	74.F	66.F	333.988	-34.529	8	6	32.F	29.F	-266.356	15799.	55.710
MAY	76.50200	20	15	77.F	68.F	390.407	-16.854	9	5	40.F	38.F	-167.472	15191.	55.710
JUN	112.52828	20	17	91.F	78.F	448.687	-2.786	23	5	52.F	48.F	-80.445	15144.	55.710
JUL	156.99287	9	17	97.F	73.F	470.385	-0.050	23	5	61.F	60.F	-8.847	15846.	55.710
AUG	132.43343	19	17	90.F	71.F	452.372	-0.304	5	5	55.F	54.F	-28.938	15191.	55.710
SEP	78.25076	11	16	86.F	72.F	408.915	-11.132	22	5	35.F	31.F	-158.603	15144.	55.710
OCT	46.67908	10	16	68.F	53.F	302.121	-32.728	20	5	41.F	35.F	-207.489	15846.	55.710
NOV	17.92756	6	15	52.F	43.F	231.861	-78.601	15	6	28.F	26.F	-290.311	13179.	55.710
DEC	8.82741	10	15	41.F	35.F	148.787	-116.382	26	6	15.F	15.F	-342.215	15846.	55.710
TOTAL	724.346						-616.292						181962.	
MAX						470.385						-429.312		55.710

SYSTEM NAME	SYSTEM TYPE	ALTITUDE MULTIPLIER	FLOOR AREA (SQFT)	MAX PEOPLE
FS-SYS1	PSZ	1.020	4800.0	12.

SUPPLY FAN (CFM)	ELEC (KW)	DELTA-T (F)	RETURN FAN (CFM)	ELEC (KW)	DELTA-T (F)	OUTSIDE AIR RATIO	COOLING CAPACITY (KBTU/HR)	SENSIBLE (SHR)	HEATING CAPACITY (KBTU/HR)	COOLING EIR (BTU/BTU)	HEATING EIR (BTU/BTU)	HEAT PUMP SUPP-HEAT (KBTU/HR)
4243.	3.255	2.4	0.	0.000	0.0	0.120	139.776	0.673	-135.998	0.36	0.37	-173.352

ZONE NAME	SUPPLY FLOW (CFM)	EXHAUST FLOW (CFM)	FAN (KW)	MINIMUM FLOW RATIO	OUTSIDE AIR FLOW (CFM)	COOLING CAPACITY (KBTU/HR)	SENSIBLE (SHR)	EXTRACTION RATE (KBTU/HR)	HEATING CAPACITY (KBTU/HR)	ADDITION RATE (KBTU/HR)	MULTIPLIER
ATZ1	2289.	0.	0.000	1.000	255.	0.00	0.00	46.97	0.00	-79.11	1.0
ATZ2	1954.	0.	0.000	1.000	255.	0.00	0.00	40.09	0.00	-67.52	1.0
EQUIP-RM	0.	0.	0.000	0.000	0.	0.00	0.00	0.00	0.00	0.00	1.0

SYSTEM NAME	SYSTEM TYPE	ALTITUDE MULTIPLIER	FLOOR AREA (SQFT)	MAX PEOPLE
OFF-SYS	VAVS	1.020	23320.0	155.

SUPPLY FAN (CFM)	ELEC (KW)	DELTA-T (F)	RETURN FAN (CFM)	ELEC (KW)	DELTA-T (F)	OUTSIDE AIR RATIO	COOLING CAPACITY (KBTU/HR)	SENSIBLE (SHR)	HEATING CAPACITY (KBTU/HR)	COOLING EIR (BTU/BTU)	HEATING EIR (BTU/BTU)
32377.	33.869	3.3	0.	0.000	0.0	0.073	866.688	0.839	-1035.494	0.00	0.37

ZONE NAME	SUPPLY FLOW (CFM)	EXHAUST FLOW (CFM)	FAN (KW)	MINIMUM FLOW RATIO	OUTSIDE AIR FLOW (CFM)	COOLING CAPACITY (KBTU/HR)	SENSIBLE (SHR)	EXTRACTION RATE (KBTU/HR)	HEATING CAPACITY (KBTU/HR)	ADDITION RATE (KBTU/HR)	MULTIPLIER
BZ1	5815.	0.	0.000	0.300	329.	0.00	0.00	87.93	-345.42	-391.46	1.0
BZ2	1723.	0.	0.000	0.300	169.	0.00	0.00	26.05	-102.35	-126.32	1.0
BZ3	5017.	0.	0.000	0.300	329.	0.00	0.00	75.86	-298.01	-360.08	1.0
TZ1	6078.	0.	0.000	0.300	329.	0.00	0.00	91.90	-361.02	-409.07	1.0
TZ2	2120.	0.	0.000	0.300	169.	0.00	0.00	32.06	-125.94	-149.91	1.0
TZ3	6458.	0.	0.000	0.300	329.	0.00	0.00	97.65	-383.63	-438.81	1.0
IZ1	2583.	0.	0.000	0.300	361.	0.00	0.00	39.05	-153.40	-187.88	1.0
IZ2	2583.	0.	0.000	0.300	361.	0.00	0.00	39.05	-153.40	-187.88	1.0

OFFICE BUILDING & OPEN ATRIA VAV SYSTEM IN OFFICE & PSZ IN ATRIA DOE-2.1E-001 Wed Nov 10 15:17:48 1993SDL RUN 4
ICE THERMAL ENERGY STORAGE FOR OFFICE STORAGE PRIORITY SAMP3.INP RUN 4
REPORT- SS-D PLANT MONTHLY LOADS SUMMARY FOR PLANT1 WEATHER FILE- TRY CHICAGO

	COOLING						HEATING						ELEC	
MONTH	COOLING ENERGY (MBTU)	TIME OF MAX DY	TIME OF MAX HR	DRY-BULB TEMP	WET-BULB TEMP	MAXIMUM COOLING LOAD (KBTU/HR)	HEATING ENERGY (MBTU)	TIME OF MAX DY	TIME OF MAX HR	DRY-BULB TEMP	WET-BULB TEMP	MAXIMUM HEATING LOAD (KBTU/HR)	ELEC-TRICAL ENERGY (KWH)	MAXIMUM ELEC LOAD (KW)
JAN	1.16159	22	7	33.F	32.F	60.873	0.000					0.000	52225.	269.396
FEB	0.74904	27	7	36.F	33.F	57.332	0.000					0.000	41544.	229.415
MAR	1.96008	3	15	76.F	65.F	149.336	0.000					0.000	31667.	235.856
APR	9.87502	28	16	74.F	66.F	250.646	0.000					0.000	20138.	139.090
MAY	19.43415	21	14	85.F	75.F	394.489	0.000					0.000	17821.	87.521
JUN	53.79815	20	18	91.F	78.F	523.800	0.000					0.000	18965.	83.203
JUL	104.17480	14	10	86.F	74.F	700.977	0.000					0.000	22494.	94.172
AUG	80.33379	11	16	88.F	74.F	506.352	0.000					0.000	20519.	83.822
SEP	33.28735	11	17	86.F	72.F	429.160	0.000					0.000	18039.	79.677
OCT	12.85266	30	17	74.F	67.F	190.136	0.000					0.000	19236.	148.039
NOV	0.50577	18	7	36.F	35.F	60.861	0.000					0.000	28055.	177.065
DEC	1.04643	12	7	33.F	33.F	59.792	0.000					0.000	46214.	228.922
TOTAL	319.179						0.000						336899.	
MAX						700.977						0.000		269.396

MAXIMUM DAILY INTEGRATED COOLING LOAD (DES DAY) 10405.387 (KBTU)
MAXIMUM DAILY INTEGRATED COOLING LOAD (WTH FILE) 7001.286 (KBTU)

OFFICE BUILDING & OPEN ATRIA VAV SYSTEM IN OFFICE & PSZ IN ATRIA DOE-2.1E-001 Wed Nov 10 15:17:48 1993SDL RUN 4
ICE THERMAL ENERGY STORAGE FOR OFFICE STORAGE PRIORITY SAMP3.INP RUN 4
REPORT- SS-Q HEAT PUMP COOLING SUMMARY FOR PLANT1 WEATHER FILE- TRY CHICAGO

	UNIT RUN TIME (HOURS)	TOTAL LOAD ON UNIT (MBTU)	ENERGY IN TO UNIT (MBTU)	AUXILIARY ENERGY (MBTU)	SUP UNIT LOAD (MBTU)	SUP UNIT ENERGY (MBTU)	WASTE HEAT GENERATED (MBTU)	WASTE HEAT USE (MBTU)		INDOOR FAN ENERGY (MBTU)
JAN	0.	0.000	0.000	0.038	0.000	0.000	0.000	0.000	0.000	2.091
FEB	0.	0.000	0.000	0.034	0.000	0.000	0.000	0.000	0.000	1.708
MAR	0.	0.000	0.000	0.034	0.000	0.000	0.000	0.000	0.000	1.958
APR	8.	1.022	0.317	0.020	0.000	0.000	0.000	0.000	0.000	2.832
MAY	39.	5.301	1.650	0.011	0.000	0.000	0.000	0.000	0.000	3.735
JUN	110.	15.345	4.876	0.000	0.000	0.000	0.000	0.000	0.000	5.351
JUL	222.	30.666	10.100	0.000	0.000	0.000	0.000	0.000	0.000	8.118
AUG	185.	25.769	8.328	0.000	0.000	0.000	0.000	0.000	0.000	6.623
SEP	70.	9.454	3.064	0.004	0.000	0.000	0.000	0.000	0.000	4.163
OCT	9.	0.890	0.294	0.020	0.000	0.000	0.000	0.000	0.000	2.914
NOV	0.	0.000	0.000	0.033	0.000	0.000	0.000	0.000	0.000	1.649
DEC	0.	0.000	0.000	0.036	0.000	0.000	0.000	0.000	0.000	1.929
ANNUAL	643.	88.449	28.628	0.230	0.000	0.000	0.000	0.000	0.000	43.071

CSPF (WITH PARASITICS) = 1.23 (BTU/BTU)

CSPF (WITHOUT PARASITICS) = 3.09 (BTU/BTU)

OFFICE BUILDING & OPEN ATRIA VAV SYSTEM IN OFFICE & PSZ IN ATRIA DOE-2.1E-001 Wed Nov 10 15:17:48 1993SDL RUN 4
ICE THERMAL ENERGY STORAGE FOR OFFICE STORAGE PRIORITY SAMP3.INP RUN 4
REPORT- SS-Q HEAT PUMP HEATING SUMMARY FOR PLANT1 WEATHER FILE- TRY CHICAGO

	UNIT RUN TIME (HOURS)	TOTAL LOAD ON UNIT (MBTU)	ENERGY IN TO UNIT (MBTU)	AUXILIARY ENERGY (MBTU)	SUP UNIT LOAD (MBTU)	SUP UNIT ENERGY (MBTU)	WASTE HEAT GENERATED (MBTU)	WASTE HEAT USE (MBTU)	DEFROST LOAD (MBTU)	INDOOR FAN ENERGY (MBTU)
JAN	224.	-15.095	9.700	0.041	-104.548	104.548	0.000	0.000	-0.280	5.368
FEB	187.	-12.908	8.084	0.038	-79.102	79.102	0.000	0.000	-0.198	4.685
MAR	112.	-8.836	5.670	0.040	-42.846	42.846	0.000	0.000	-0.109	5.035
APR	22.	-1.858	1.639	0.029	-5.738	5.738	0.000	0.000	-0.034	4.220
MAY	1.	-0.158	0.250	0.016	-0.237	0.237	0.000	0.000	0.000	3.080
JUN	0.	0.000	0.005	0.000	0.000	0.000	0.000	0.000	0.000	2.808
JUL	0.	0.000	0.000	0.000	0.000	0.000	0.000	0.000	0.000	4.474
AUG	0.	0.000	0.000	0.000	0.000	0.000	0.000	0.000	0.000	3.235
SEP	0.	-0.006	0.094	0.005	-0.009	0.009	0.000	0.000	-0.002	2.542
OCT	9.	-0.930	0.932	0.025	-3.609	3.609	0.000	0.000	-0.014	3.769
NOV	104.	-8.553	5.183	0.041	-39.418	39.418	0.000	0.000	-0.118	4.270
DEC	247.	-17.471	11.009	0.038	-84.450	84.450	0.000	0.000	-0.367	5.506
ANNUAL	906.	-65.815	42.564	0.274	-359.957	359.957	0.000	0.000	-1.123	48.992

HSPF (WITH PARASITICS) = 1.05 (BTU/BTU)

HSPF (WITHOUT PARASITICS) = 1.05 (BTU/BTU)

OFFICE BUILDING & OPEN ATRIA VAV SYSTEM IN OFFICE & PSZ IN ATRIA DOE-2.1E-001 Wed Nov 10 15:17:48 1993SDL RUN 4
ICE THERMAL ENERGY STORAGE FOR OFFICE STORAGE PRIORITY SAMP3.INP RUN 4
REPORT- SS-A SYSTEM MONTHLY LOADS SUMMARY FOR FS-SYS1 WEATHER FILE- TRY CHICAGO

	COOLING						HEATING						ELEC	
MONTH	COOLING ENERGY (MBTU)	TIME OF MAX DY	TIME OF MAX HR	DRY-BULB TEMP	WET-BULB TEMP	MAXIMUM COOLING LOAD (KBTU/HR)	HEATING ENERGY (MBTU)	TIME OF MAX DY	TIME OF MAX HR	DRY-BULB TEMP	WET-BULB TEMP	MAXIMUM HEATING LOAD (KBTU/HR)	ELEC-TRICAL ENERGY (KWH)	MAXIMUM ELEC LOAD (KW)
JAN	0.00000					0.000	-21.459	2	10	5.F	4.F	-165.825	6848.	55.132
FEB	0.00000					0.000	-16.224	24	10	20.F	18.F	-147.473	5183.	43.515
MAR	0.00000					0.000	-9.905	24	10	7.F	5.F	-138.640	3968.	47.166
APR	1.02246	29	16	68.F	63.F	60.729	-1.824	8	10	32.F	28.F	-70.516	2560.	17.327
MAY	5.30144	21	14	85.F	75.F	97.036	-0.158	9	10	43.F	39.F	-36.426	2449.	16.120
JUN	15.34491	20	16	90.F	77.F	129.905	0.000	24	9	57.F	51.F	-0.258	3333.	19.952
JUL	30.66633	14	12	91.F	76.F	134.876	0.000					0.000	4995.	20.528
AUG	25.76921	11	16	88.F	74.F	127.902	0.000					0.000	4386.	19.913
SEP	9.45394	11	15	87.F	72.F	118.094	-0.005	22	8	34.F	31.F	-0.541	2814.	18.704
OCT	0.89038	31	14	76.F	66.F	50.796	-0.916	20	10	42.F	36.F	-64.854	2343.	16.009
NOV	0.00000					0.000	-8.508	14	10	29.F	28.F	-93.171	3221.	25.407
DEC	0.00000					0.000	-18.745	22	10	22.F	22.F	-149.223	5764.	45.257
TOTAL	88.449						-77.743						47862.	
MAX						134.876						-165.825		55.132

	-----COOLING-----				---HEATING---			DAY COOLING PEAK			
	JUL 7				JAN 2			JUL 7			
HOUR	HOURLY COOLING LOAD (KBTU)	SENSIBLE HEAT RATIO	DRY-BULB TEMP	WET-BULB TEMP	HOURLY HEATING LOAD (KBTU)	DRY-BULB TEMP	WET-BULB TEMP	HOURLY COOLING LOAD (KBTU)	SENSIBLE HEAT RATIO	DRY-BULB TEMP	WET-BULB TEMP
1	0.000	0.000	89.F	70.F	0.000	-4.F	-4.F	0.000	0.000	89.F	70.F
2	0.000	0.000	88.F	70.F	0.000	-4.F	-4.F	0.000	0.000	88.F	70.F
3	0.000	0.000	87.F	69.F	0.000	-4.F	-4.F	0.000	0.000	87.F	69.F
4	0.000	0.000	87.F	69.F	0.000	-4.F	-4.F	0.000	0.000	87.F	69.F
5	123.831 *	0.998	86.F	68.F	0.000	-3.F	-3.F	123.831 *	0.998	86.F	68.F
6	118.760 *	0.996	86.F	68.F	-151.031	-2.F	-2.F	118.760 *	0.996	86.F	68.F
7	131.640 *	0.952	86.F	68.F	-165.150	-1.F	-1.F	131.640 *	0.952	86.F	68.F
8	128.995 *	0.948	86.F	68.F	-170.566	0.F	0.F	128.995 *	0.948	86.F	68.F
9	132.718 *	0.926	87.F	69.F	-164.103	1.F	1.F	132.718 *	0.926	87.F	69.F
10	135.400 *	0.922	89.F	69.F	-162.829	2.F	2.F	135.400 *	0.922	89.F	69.F
11	136.128 *	0.917	92.F	71.F	-150.740	3.F	3.F	136.128 *	0.917	92.F	71.F
12	135.450 *	0.915	94.F	72.F	-134.592	4.F	4.F	135.450 *	0.915	94.F	72.F
13	135.096 *	0.910	96.F	73.F	-110.465	5.F	5.F	135.096 *	0.910	96.F	73.F
14	134.813 *	0.903	97.F	74.F	-99.900	5.F	5.F	134.813 *	0.903	97.F	74.F
15	133.828 *	0.899	98.F	74.F	-97.127	6.F	6.F	133.828 *	0.899	98.F	74.F
16	132.562 *	0.898	97.F	74.F	-101.290	5.F	5.F	132.562 *	0.898	97.F	74.F
17	131.434 *	0.898	97.F	74.F	-111.211	5.F	5.F	131.434 *	0.898	97.F	74.F
18	111.545 *	0.996	97.F	74.F	-113.314	4.F	4.F	111.545 *	0.996	97.F	74.F
19	119.696 *	0.996	96.F	74.F	-119.721	3.F	3.F	119.696 *	0.996	96.F	74.F
20	123.418 *	0.996	95.F	73.F	-122.178	1.F	2.F	123.418 *	0.996	95.F	73.F
21	0.000	0.000	94.F	73.F	-124.294	0.F	0.F	0.000	0.000	94.F	73.F
22	0.000	0.000	93.F	72.F	0.000	-1.F	-1.F	0.000	0.000	93.F	72.F
23	0.000	0.000	92.F	71.F	0.000	-3.F	-2.F	0.000	0.000	92.F	71.F
24	0.000	0.000	90.F	71.F	0.000	-4.F	-3.F	0.000	0.000	90.F	71.F
	---				---			---			
SUM								2065.312			
MAX	136.128				-170.566						

SYSTEM-TYPE	PSZ	SQFT/TON	423.1
COOLING PEAK	28.36 (BTU/HR- SQFT)	HEATING PEAK	-35.53 (BTU/HR- SQFT)
SUPPLY AIR PEAK FLOW	0.88 (CFM/SQFT)	MIN-OA/PERSON	42.50 (CFM)
OA FRAC AT CLG PEAK	0.120	OA FRAC AT HTG PEAK	0.120

* ASTERISKS INDICATE HOURS LOADS NOT MET

	-----COOLING-----				---HEATING---			DAY COOLING PEAK			
	JUL 14				JAN 2			JUL 14			
HOUR	HOURLY COOLING LOAD (KBTU)	SENSIBLE HEAT RATIO	DRY-BULB TEMP	WET-BULB TEMP	HOURLY HEATING LOAD (KBTU)	DRY-BULB TEMP	WET-BULB TEMP	HOURLY COOLING LOAD (KBTU)	SENSIBLE HEAT RATIO	DRY-BULB TEMP	WET-BULB TEMP
1	0.000	0.000	83.F	72.F	0.000	1.F	0.F	0.000	0.000	83.F	72.F
2	0.000	0.000	81.F	72.F	0.000	1.F	0.F	0.000	0.000	81.F	72.F
3	0.000	0.000	80.F	71.F	0.000	1.F	0.F	0.000	0.000	80.F	71.F
4	0.000	0.000	78.F	71.F	0.000	2.F	1.F	0.000	0.000	78.F	71.F
5	0.000	0.000	77.F	70.F	0.000	2.F	1.F	0.000	0.000	77.F	70.F
6	109.579 *	0.989	78.F	71.F	0.000	2.F	1.F	109.579 *	0.989	78.F	71.F
7	128.128 *	0.860	79.F	71.F	-143.108	3.F	2.F	128.128 *	0.860	79.F	71.F
8	127.680	0.858	82.F	72.F	-144.668	4.F	3.F	127.680	0.858	82.F	72.F
9	130.021	0.836	86.F	74.F	-137.546	4.F	3.F	130.021	0.836	86.F	74.F
10	130.956 *	0.845	88.F	74.F	-165.825	5.F	4.F	130.956 *	0.845	88.F	74.F
11	134.876 *	0.832	91.F	76.F	-148.196	6.F	5.F	134.876 *	0.832	91.F	76.F
12	131.300 *	0.848	94.F	76.F	-135.541	8.F	7.F	131.300 *	0.848	94.F	76.F
13	132.375 *	0.845	96.F	77.F	-129.628	9.F	9.F	132.375 *	0.845	96.F	77.F
14	128.703 *	0.844	87.F	74.F	-122.642	11.F	11.F	128.703 *	0.844	87.F	74.F
15	128.116 *	0.837	76.F	71.F	-120.576	12.F	12.F	128.116 *	0.837	76.F	71.F
16	128.461 *	0.831	78.F	72.F	-117.240	14.F	13.F	128.461 *	0.831	78.F	72.F
17	126.874	0.830	78.F	72.F	-113.889	15.F	14.F	126.874	0.830	78.F	72.F
18	104.379	0.994	89.F	75.F	-111.489	15.F	15.F	104.379	0.994	89.F	75.F
19	105.273	0.995	87.F	75.F	-112.612	17.F	16.F	105.273	0.995	87.F	75.F
20	104.677	0.996	84.F	74.F	-111.856	17.F	16.F	104.677	0.996	84.F	74.F
21	0.000	0.000	84.F	74.F	-108.783	18.F	18.F	0.000	0.000	84.F	74.F
22	0.000	0.000	82.F	74.F	0.000	17.F	17.F	0.000	0.000	82.F	74.F
23	0.000	0.000	80.F	72.F	0.000	17.F	17.F	0.000	0.000	80.F	72.F
24	0.000	0.000	78.F	72.F	0.000	17.F	17.F	0.000	0.000	78.F	72.F
SUM								1851.399			
MAX	134.876				-165.825						

SYSTEM-TYPE	PSZ	SQFT/TON	427.1
COOLING PEAK	28.10 (BTU/HR- SQFT)	HEATING PEAK	-34.55 (BTU/HR- SQFT)
SUPPLY AIR PEAK FLOW	0.88 (CFM/SQFT)	MIN-OA/PERSON	42.50 (CFM)
OA FRAC AT CLG PEAK	0.120	OA FRAC AT HTG PEAK	0.120

* ASTERISKS INDICATE HOURS LOADS NOT MET

	UNIT RUN TIME (HOURS)	TOTAL LOAD ON UNIT (MBTU)	ENERGY IN TO UNIT (MBTU)	AUXILIARY ENERGY (MBTU)	SUP UNIT LOAD (MBTU)	SUP UNIT ENERGY (MBTU)	WASTE HEAT GENERATED (MBTU)	WASTE HEAT USE (MBTU)		INDOOR FAN ENERGY (MBTU)
JAN	0.	0.000	0.000	0.038	0.000	0.000	0.000	0.000	0.000	0.194
FEB	0.	0.000	0.000	0.034	0.000	0.000	0.000	0.000	0.000	0.094
MAR	0.	0.000	0.000	0.034	0.000	0.000	0.000	0.000	0.000	0.194
APR	8.	1.022	0.317	0.020	0.000	0.000	0.000	0.000	0.000	1.039
MAY	39.	5.301	1.650	0.011	0.000	0.000	0.000	0.000	0.000	1.966
JUN	110.	15.345	4.876	0.000	0.000	0.000	0.000	0.000	0.000	2.949
JUL	222.	30.666	10.100	0.000	0.000	0.000	0.000	0.000	0.000	3.655
AUG	185.	25.769	8.328	0.000	0.000	0.000	0.000	0.000	0.000	3.438
SEP	70.	9.454	3.064	0.004	0.000	0.000	0.000	0.000	0.000	2.460
OCT	9.	0.890	0.294	0.020	0.000	0.000	0.000	0.000	0.000	1.294
NOV	0.	0.000	0.000	0.033	0.000	0.000	0.000	0.000	0.000	0.144
DEC	0.	0.000	0.000	0.036	0.000	0.000	0.000	0.000	0.000	0.044
ANNUAL	643.	88.449	28.628	0.230	0.000	0.000	0.000	0.000	0.000	17.473

CSPF (WITH PARASITICS) = 1.91 (BTU/BTU)

CSPF (WITHOUT PARASITICS) = 3.09 (BTU/BTU)

OFFICE BUILDING & OPEN ATRIA VAV SYSTEM IN OFFICE & PSZ IN ATRIA DOE-2.1E-001 Wed Nov 10 15:17:48 1993SDL RUN 4
ICE THERMAL ENERGY STORAGE FOR OFFICE STORAGE PRIORITY SAMP3.INP RUN 4
REPORT- SS-Q HEAT PUMP HEATING SUMMARY FOR FS-SYS1 WEATHER FILE- TRY CHICAGO

	UNIT RUN TIME (HOURS)	TOTAL LOAD ON UNIT (MBTU)	ENERGY IN TO UNIT (MBTU)	AUXILIARY ENERGY (MBTU)	SUP UNIT LOAD (MBTU)	SUP UNIT ENERGY (MBTU)	WASTE HEAT GENERATED (MBTU)	WASTE HEAT USE (MBTU)	DEFROST LOAD (MBTU)	INDOOR FAN ENERGY (MBTU)
JAN	224.	-15.095	9.700	0.041	-6.644	6.644	0.000	0.000	-0.280	3.471
FEB	187.	-12.908	8.084	0.038	-3.514	3.514	0.000	0.000	-0.198	3.071
MAR	112.	-8.836	5.670	0.040	-1.178	1.178	0.000	0.000	-0.109	3.271
APR	22.	-1.858	1.639	0.029	0.000	0.000	0.000	0.000	-0.034	2.427
MAY	1.	-0.158	0.250	0.016	0.000	0.000	0.000	0.000	0.000	1.311
JUN	0.	0.000	0.005	0.000	0.000	0.000	0.000	0.000	0.000	0.405
JUL	0.	0.000	0.000	0.000	0.000	0.000	0.000	0.000	0.000	0.011
AUG	0.	0.000	0.000	0.000	0.000	0.000	0.000	0.000	0.000	0.050
SEP	0.	-0.006	0.094	0.005	0.000	0.000	0.000	0.000	-0.002	0.839
OCT	9.	-0.930	0.932	0.025	0.000	0.000	0.000	0.000	-0.014	2.149
NOV	104.	-8.553	5.183	0.041	-0.073	0.073	0.000	0.000	-0.118	2.766
DEC	247.	-17.471	11.009	0.038	-1.641	1.641	0.000	0.000	-0.367	3.621
ANNUAL	906.	-65.815	42.564	0.274	-13.051	13.051	0.000	0.000	-1.123	23.394

HSPF (WITH PARASITICS) = 1.28 (BTU/BTU)

HSPF (WITHOUT PARASITICS) = 1.40 (BTU/BTU)

OFFICE BUILDING & OPEN ATRIA VAV SYSTEM IN OFFICE & PSZ IN ATRIA DOE-2.1E-001 Wed Nov 10 15:17:48 1993SDL RUN 4
ICE THERMAL ENERGY STORAGE FOR OFFICE STORAGE PRIORITY SAMP3.INP RUN 4
REPORT- SS-A SYSTEM MONTHLY LOADS SUMMARY FOR OFF-SYS WEATHER FILE- TRY CHICAGO

	COOLING						HEATING						ELEC	
MONTH	COOLING ENERGY (MBTU)	TIME OF MAX DY	TIME OF MAX HR	DRY-BULB TEMP	WET-BULB TEMP	MAXIMUM COOLING LOAD (KBTU/HR)	HEATING ENERGY (MBTU)	TIME OF MAX DY	TIME OF MAX HR	DRY-BULB TEMP	WET-BULB TEMP	MAXIMUM HEATING LOAD (KBTU/HR)	ELEC-TRICAL ENERGY (KWH)	MAXIMUM ELEC LOAD (KW)
JAN	1.16159	22	7	33.F	32.F	60.873	-100.279	2	10	5.F	4.F	-540.671	45377.	214.264
FEB	0.74904	27	7	36.F	33.F	57.332	-76.824	24	7	20.F	18.F	-452.024	36361.	185.900
MAR	1.96008	3	15	76.F	65.F	149.336	-42.317	24	10	7.F	5.F	-453.387	27699.	188.690
APR	9.87502	28	16	74.F	66.F	250.646	-5.752	7	10	49.F	44.F	-238.333	17578.	125.679
MAY	19.43415	21	14	85.F	75.F	394.489	-0.237	9	10	43.F	39.F	-69.098	15373.	76.093
JUN	53.79815	20	18	91.F	78.F	523.800	0.000					0.000	15632.	65.407
JUL	104.17480	14	10	86.F	74.F	700.977	0.000					0.000	17500.	74.731
AUG	80.33379	11	16	88.F	74.F	506.352	0.000					0.000	16133.	64.852
SEP	33.28735	11	17	86.F	72.F	429.160	-0.009	23	10	46.F	40.F	-3.974	15225.	61.356
OCT	12.85266	30	17	74.F	67.F	190.136	-3.618	20	10	42.F	36.F	-265.856	16893.	133.743
NOV	0.50577	18	7	36.F	35.F	60.861	-39.520	28	7	26.F	24.F	-352.569	24833.	156.303
DEC	1.04643	12	7	33.F	33.F	59.792	-83.487	22	10	22.F	22.F	-436.236	40450.	183.665
TOTAL	319.179						-352.043						289056.	
MAX						700.977						-540.671		214.264

OFFICE BUILDING & OPEN ATRIA VAV SYSTEM IN OFFICE & PSZ IN ATRIA DOE-2.1E-001 Wed Nov 10 15:17:48 1993SDL RUN 4
ICE THERMAL ENERGY STORAGE FOR OFFICE STORAGE PRIORITY SAMP3.INP RUN 4
REPORT- SS-J SYSTEM PEAK HEATING AND COOLING DAYS FOR OFF-SYS DESIGN DAY WEATHER FILE- TRY CHICAGO

	-----COOLING-----				---HEATING---			DAY COOLING PEAK			
	JUL 7				JAN 2			JUL 7			
HOUR	HOURLY COOLING LOAD (KBTU)	SENSIBLE HEAT RATIO	DRY-BULB TEMP	WET-BULB TEMP	HOURLY HEATING LOAD (KBTU)	DRY-BULB TEMP	WET-BULB TEMP	HOURLY COOLING LOAD (KBTU)	SENSIBLE HEAT RATIO	DRY-BULB TEMP	WET-BULB TEMP
1	0.000	0.000	89.F	70.F	-311.526	-4.F	-4.F	0.000	0.000	89.F	70.F
2	0.000	0.000	88.F	70.F	-314.872	-4.F	-4.F	0.000	0.000	88.F	70.F
3	0.000	0.000	87.F	69.F	-317.335	-4.F	-4.F	0.000	0.000	87.F	69.F
4	0.000	0.000	87.F	69.F	-319.004	-4.F	-4.F	0.000	0.000	87.F	69.F
5	0.000	0.000	86.F	68.F	-319.910	-3.F	-3.F	0.000	0.000	86.F	68.F
6	0.000	0.000	86.F	68.F	-320.118	-2.F	-2.F	0.000	0.000	86.F	68.F
7	1169.802 *	0.987	86.F	68.F	-590.608	-1.F	-1.F	1169.802 *	0.987	86.F	68.F
8	894.386 *	0.987	86.F	68.F	-642.232	0.F	0.F	894.386 *	0.987	86.F	68.F
9	970.268 *	0.960	87.F	69.F	-576.015	1.F	1.F	970.268 *	0.960	87.F	69.F
10	961.957 *	0.955	89.F	69.F	-593.530	2.F	2.F	961.957 *	0.955	89.F	69.F
11	956.382 *	0.949	92.F	71.F	-519.670	3.F	3.F	956.382 *	0.949	92.F	71.F
12	932.543 *	0.949	94.F	72.F	-466.235	4.F	4.F	932.543 *	0.949	94.F	72.F
13	919.971 *	0.943	96.F	73.F	-432.169	5.F	5.F	919.971 *	0.943	96.F	73.F
14	920.658 *	0.934	97.F	74.F	-389.804	5.F	5.F	920.658 *	0.934	97.F	74.F
15	910.681 *	0.930	98.F	74.F	-343.544	6.F	6.F	910.681 *	0.930	98.F	74.F
16	894.139 *	0.928	97.F	74.F	-320.297	5.F	5.F	894.139 *	0.928	97.F	74.F
17	874.522 *	0.927	97.F	74.F	-317.586	5.F	5.F	874.522 *	0.927	97.F	74.F
18	0.000	0.000	97.F	74.F	-309.581	4.F	4.F	0.000	0.000	97.F	74.F
19	0.000	0.000	96.F	74.F	-365.914	3.F	3.F	0.000	0.000	96.F	74.F
20	0.000	0.000	95.F	73.F	-369.110	1.F	2.F	0.000	0.000	95.F	73.F
21	0.000	0.000	94.F	73.F	-372.566	0.F	0.F	0.000	0.000	94.F	73.F
22	0.000	0.000	93.F	72.F	0.000	-1.F	-1.F	0.000	0.000	93.F	72.F
23	0.000	0.000	92.F	71.F	-20.463	-3.F	-2.F	0.000	0.000	92.F	71.F
24	0.000	0.000	90.F	71.F	-60.780	-4.F	-3.F	0.000	0.000	90.F	71.F
SUM	---				---			---			
								10405.312			
MAX	1169.802				-642.232						

SYSTEM-TYPE	VAVS	SQFT/TON	239.2
COOLING PEAK	50.16 (BTU/HR- SQFT)	HEATING PEAK	-27.54 (BTU/HR- SQFT)
SUPPLY AIR PEAK FLOW	1.39 (CFM/SQFT)	MIN-OA/PERSON	15.30 (CFM)
OA FRAC AT CLG PEAK	0.075	OA FRAC AT HTG PEAK	0.243

* ASTERISKS INDICATE HOURS LOADS NOT MET

	-----COOLING-----				---HEATING---			DAY COOLING PEAK			
	JUL 14				JAN 2			JUL 14			
HOUR	HOURLY COOLING LOAD (KBTU)	SENSIBLE HEAT RATIO	DRY-BULB TEMP	WET-BULB TEMP	HOURLY HEATING LOAD (KBTU)	DRY-BULB TEMP	WET-BULB TEMP	HOURLY COOLING LOAD (KBTU)	SENSIBLE HEAT RATIO	DRY-BULB TEMP	WET-BULB TEMP
1	0.000	0.000	83.F	72.F	-231.415	1.F	0.F	0.000	0.000	83.F	72.F
2	0.000	0.000	81.F	72.F	-234.666	1.F	0.F	0.000	0.000	81.F	72.F
3	0.000	0.000	80.F	71.F	-237.541	1.F	0.F	0.000	0.000	80.F	71.F
4	0.000	0.000	78.F	71.F	-239.997	2.F	1.F	0.000	0.000	78.F	71.F
5	0.000	0.000	77.F	70.F	-256.413	2.F	1.F	0.000	0.000	77.F	70.F
6	0.000	0.000	78.F	71.F	-243.484	2.F	1.F	0.000	0.000	78.F	71.F
7	635.572	0.924	79.F	71.F	-483.920	3.F	2.F	635.572	0.924	79.F	71.F
8	631.693	0.908	82.F	72.F	-478.866	4.F	3.F	631.693	0.908	82.F	72.F
9	700.977	0.878	86.F	74.F	-448.579	4.F	3.F	700.977	0.878	86.F	74.F
10	687.604	0.885	88.F	74.F	-540.671	5.F	4.F	687.604	0.885	88.F	74.F
11	685.648	0.869	91.F	76.F	-475.001	6.F	5.F	685.648	0.869	91.F	76.F
12	645.526	0.882	94.F	76.F	-410.687	8.F	7.F	645.526	0.882	94.F	76.F
13	651.644	0.876	96.F	77.F	-379.031	9.F	9.F	651.644	0.876	96.F	77.F
14	627.237	0.873	87.F	74.F	-339.156	11.F	11.F	627.237	0.873	87.F	74.F
15	597.162	0.870	76.F	71.F	-309.246	12.F	12.F	597.162	0.870	76.F	71.F
16	577.640	0.860	78.F	72.F	-285.797	14.F	13.F	577.640	0.860	78.F	72.F
17	560.584	0.856	78.F	72.F	-265.645	15.F	14.F	560.584	0.856	78.F	72.F
18	0.000	0.000	89.F	75.F	-250.790	15.F	15.F	0.000	0.000	89.F	75.F
19	0.000	0.000	87.F	75.F	-294.339	17.F	16.F	0.000	0.000	87.F	75.F
20	0.000	0.000	84.F	74.F	-290.969	17.F	16.F	0.000	0.000	84.F	74.F
21	0.000	0.000	84.F	74.F	-281.007	18.F	18.F	0.000	0.000	84.F	74.F
22	0.000	0.000	82.F	74.F	0.000	17.F	17.F	0.000	0.000	82.F	74.F
23	0.000	0.000	80.F	72.F	0.000	17.F	17.F	0.000	0.000	80.F	72.F
24	0.000	0.000	78.F	72.F	0.000	17.F	17.F	0.000	0.000	78.F	72.F
	---				---			---			
SUM								7001.287			
MAX	700.977				-540.671						

SYSTEM-TYPE	VAVS	SQFT/TON	399.2
COOLING PEAK	30.06 (BTU/HR- SQFT)	HEATING PEAK	-23.18 (BTU/HR- SQFT)
SUPPLY AIR PEAK FLOW	1.39 (CFM/SQFT)	MIN-OA/PERSON	15.30 (CFM)
OA FRAC AT CLG PEAK	0.092	OA FRAC AT HTG PEAK	0.245

* ASTERISKS INDICATE HOURS LOADS NOT MET

MESSAGE LIST FROM PLANT PROGRAM

CAUTION********

TOWER WILL BE DEFINED FOR CHILLERS THAT NEED IT

EQUIPMENT	SIZE (MBTU/H)	NUMBER INSTD	NUMBER AVAIL	SIZE (MBTU/H)	NUMBER INSTD	NUMBER AVAIL	SIZE (MBTU/H)	NUMBER INSTD	NUMBER AVAIL	SIZE (MBTU/H)	NUMBER INSTD	NUMBER AVAIL	SIZE (MBTU/H)	NUMBER INSTD	NUMBER AVAIL	SIZE (MBTU/H)	NUMBER INSTD	NUMBER AVAIL
ELEC-DHW-HEATER	0.027	1	1															
OPEN-REC-CHLR	0.582	1	1															
COOLING-TWR	0.736	1	1															
CTANK-STORAGE	4.842	1	1															

COOL-STORE-RATE = 0.372 (MBTU/H)
COOL-SUPPLY-RATE= 0.440 (MBTU/H)

OFFICE BUILDING & OPEN ATRIA VAV SYSTEM IN OFFICE & PSZ IN ATRIA DOE-2.1E-001 Wed Nov 10 15:17:48 1993PDL RUN 4
ICE THERMAL ENERGY STORAGE FOR OFFICE STORAGE PRIORITY SAMP3.INP RUN 4
REPORT- PS-A PLANT ENERGY UTILIZATION SUMMARY WEATHER FILE- TRY CHICAGO

	SITE ENERGY												SOURCE
	2	3	4	5	6	7	8	9	10	11	12	13	14
MONTH	TOTAL HEAT LOAD (MBTU)	TOTAL COOLING LOAD (MBTU)	TOTAL ELECTR LOAD (MWH)	RCVRED ENERGY (MBTU)	WASTED RCVRABL ENERGY (MBTU)	FUEL INPUT COOLING (MBTU)	ELEC INPUT COOLING (MWH)	FUEL INPUT HEATING (MBTU)	ELEC INPUT HEATING (MWH)	FUEL INPUT ELECT (MBTU)	TOTAL FUEL INPUT (MBTU)	TOTAL SITE ENERGY (MBTU)	TOTAL SOURCE ENERGY (MBTU)
JAN	7.0	1.5	54.8	0.0	0.0	0.0	0.2	0.0	36.5	0.0	0.0	186.9	560.7
FEB	6.4	0.9	43.8	0.0	0.0	0.0	0.1	0.0	28.0	0.0	0.0	149.5	448.5
MAR	7.1	2.4	34.3	0.0	0.0	0.0	0.3	0.0	16.7	0.0	0.0	117.0	351.1
APR	6.6	11.6	23.8	0.0	0.0	0.0	1.7	0.0	4.3	0.0	0.0	81.3	243.9
MAY	6.2	21.6	22.4	0.0	0.0	0.0	3.0	0.0	2.1	0.0	0.0	76.3	228.9
JUN	5.5	62.3	26.4	0.0	0.0	0.0	7.0	0.0	1.8	0.0	0.0	90.0	270.0
JUL	5.3	111.2	34.3	0.0	0.0	0.0	13.1	0.0	1.7	0.0	0.0	117.2	351.6
AUG	5.2	87.7	30.2	0.0	0.0	0.0	10.4	0.0	1.7	0.0	0.0	103.0	308.9
SEP	5.1	31.4	23.1	0.0	0.0	0.0	4.3	0.0	1.7	0.0	0.0	78.9	236.8
OCT	5.7	14.9	23.1	0.0	0.0	0.0	2.1	0.0	3.2	0.0	0.0	78.8	236.3
NOV	5.7	0.6	30.0	0.0	0.0	0.0	0.1	0.0	15.0	0.0	0.0	102.5	307.6
DEC	6.6	1.3	48.6	0.0	0.0	0.0	0.2	0.0	30.4	0.0	0.0	166.0	498.1
TOTAL	72.5	347.5	394.8	0.0	0.0	0.0	42.5	0.0	143.1	0.0	0.0	1347.4	4042.5

OFFICE BUILDING & OPEN ATRIA VAV SYSTEM IN OFFICE & PSZ IN ATRIA DOE-2.1E-001 Wed Nov 10 15:17:48 1993PDL RUN 4
ICE THERMAL ENERGY STORAGE FOR OFFICE STORAGE PRIORITY SAMP3.INP RUN 4
REPORT- PS-B MONTHLY UTILITY AND FUEL USE SUMMARY WEATHER FILE- TRY CHICAGO

MONTH	BTU/UNIT:	ELECTRICITY METER-1 3413./KWH
JAN		
ENERGY CONSUMPTION (UNITS/MO)		54754.3
PEAK DEMAND (UNITS/HR OR DAY)		273.5
	PEAK DAY/HR	2/10
FEB		
ENERGY CONSUMPTION (UNITS/MO)		43796.5
PEAK DEMAND (UNITS/HR OR DAY)		233.9
	PEAK DAY/HR	24/10
MAR		
ENERGY CONSUMPTION (UNITS/MO)		34288.5
PEAK DEMAND (UNITS/HR OR DAY)		240.0
	PEAK DAY/HR	24/10
APR		
ENERGY CONSUMPTION (UNITS/MO)		23822.9
PEAK DEMAND (UNITS/HR OR DAY)		143.1
	PEAK DAY/HR	7/10
MAY		
ENERGY CONSUMPTION (UNITS/MO)		22355.1
PEAK DEMAND (UNITS/HR OR DAY)		117.1
	PEAK DAY/HR	21/14
JUN		
ENERGY CONSUMPTION (UNITS/MO)		26371.9
PEAK DEMAND (UNITS/HR OR DAY)		108.1
	PEAK DAY/HR	20/18
JUL		
ENERGY CONSUMPTION (UNITS/MO)		34337.2
PEAK DEMAND (UNITS/HR OR DAY)		126.5
	PEAK DAY/HR	14/12
AUG		
ENERGY CONSUMPTION (UNITS/MO)		30167.7
PEAK DEMAND (UNITS/HR OR DAY)		107.5
	PEAK DAY/HR	20/15
SEP		
ENERGY CONSUMPTION (UNITS/MO)		23124.0
PEAK DEMAND (UNITS/HR OR DAY)		123.7
	PEAK DAY/HR	11/17
OCT		
ENERGY CONSUMPTION (UNITS/MO)		23074.4
PEAK DEMAND (UNITS/HR OR DAY)		151.4
	PEAK DAY/HR	20/10
NOV		
ENERGY CONSUMPTION (UNITS/MO)		30037.5
PEAK DEMAND (UNITS/HR OR DAY)		181.0
	PEAK DAY/HR	28/10
DEC		
ENERGY CONSUMPTION (UNITS/MO)		48645.5
PEAK DEMAND (UNITS/HR OR DAY)		233.5
	PEAK DAY/HR	22/10
TOTAL		
ENERGY CONSUMPTION (UNITS/YR)		394775.5
PEAK DEMAND (UNITS/HR OR DAY)		273.5

OFFICE BUILDING & OPEN ATRIA VAV SYSTEM IN OFFICE & PSZ IN ATRIA DOE-2.1E-001 Wed Nov 10 15:17:48 1993PDL RUN 4
ICE THERMAL ENERGY STORAGE FOR OFFICE STORAGE PRIORITY SAMP3.INP RUN 4
REPORT- PS-C EQUIPMENT PART LOAD OPERATION WEATHER FILE- TRY CHICAGO

EQUIPMENT	HOURS AT PERCENT PART LOAD RATIO											TOTAL HOURS	ANNUAL LOAD (MBTU)	FALSE LOAD (MBTU)	ELEC USED (KWH)	THERMAL USED (MBTU)
	0 -- 10	-- 20	-- 30	-- 40	-- 50	-- 60	-- 70	-- 80	-- 90	-- 100	- 110+	-----	------	------	------	------
ELEC-DHW-HEATER	3842	334	291	702	883	882	787	588	212	201	38	8760	72.5	0.0	23371.	0.0
	3842	334	291	702	883	882	787	588	212	201	38					
OPEN-REC-CHLR	154	265	271	94	52	51	29	7	9	585	0	1517	347.5	0.0	29064.	0.0
	154	265	271	94	52	51	29	7	9	585	0					
COOLING-TWR	481	334	209	376	103	11	3	0	0	0	0	1517	440.4	0.0	1776.	0.0
	481	334	209	376	103	11	3	0	0	0	0					
CTANK-STORAGE	28	70	53	19	23	49	120	163	124	120	16	785	222.1	0.0	0.	0.0
	785	0	0	0	0	0	0	0	0	0	0					

HOT LOOP CIRCULATION PUMP ELECTRICAL USE = 0. KWH
COLD LOOP CIRCULATION PUMP ELECTRICAL USE = 3320. KWH
CONDENSER WATER PUMP ELECTRICAL USE = 1200. KWH
TOWER OR CONDENSER FAN ELECTRICAL USE = 576. KWH

NOTES TO TABLE
1) THE FIRST PART LOAD ENTRY FOR EACH PIECE OF EQUIPMENT IS THE HOURLY LOAD DIVIDED BY THE HOURLY OPERATING CAPACITY

2) THE SECOND PART LOAD ENTRY FOR EACH PIECE OF EQUIPMENT IS THE HOURLY LOAD DIVIDED BY THE TOTAL INSTALLED CAPACITY

TOTAL HOURS AT HOURLY DEMAND AND TIME OF DAY

	HOUR	1AM	2	3	4	5	6	7	8	9	10	11	12	1PM	2	3	4	5	6	7	8	9	10	11	12	TOTAL
	327	0	0	0	0	0	0	0	0	0	0	0	0	0	0	0	0	0	0	0	0	0	0	0	0	0
	301	0	0	0	0	0	0	0	0	0	0	0	0	0	0	0	0	0	0	0	0	0	0	0	0	0
	276	0	0	0	0	0	0	0	0	0	2	0	0	0	0	0	0	0	0	0	0	0	0	0	0	2
	251	0	0	0	0	0	0	2	1	0	5	2	1	0	0	0	0	0	0	0	0	0	0	0	0	11
D	226	0	0	0	0	0	0	5	3	2	13	4	2	1	0	0	0	0	0	0	0	0	0	0	0	30
E	201	0	0	0	0	0	0	5	5	5	14	15	7	4	2	1	1	1	0	0	0	0	0	0	0	60
M K	176	0	0	0	0	0	0	18	12	9	26	14	17	15	11	6	2	3	3	2	2	1	0	0	0	141
A W	150	0	0	0	0	0	0	10	14	17	31	40	37	23	20	17	20	17	16	9	8	10	0	0	0	289
N	125	0	0	0	0	0	0	26	15	14	23	45	57	67	65	74	72	72	72	23	25	27	0	0	0	677
D	100	1	0	2	2	3	2	14	44	45	64	78	91	81	96	108	105	109	121	60	63	54	0	0	0	1143
	75	10	11	9	10	12	13	8	61	79	78	58	44	64	61	48	54	53	43	91	87	90	5	6	8	1003
	50	73	72	67	60	39	36	182	117	99	15	15	13	13	12	23	21	20	20	101	101	103	80	76	76	1434
	25	281	282	287	293	311	314	95	93	95	94	94	96	97	98	88	90	90	90	79	79	80	280	283	281	3970
PERCENT TOTAL DEMAND		1.0	1.0	1.0	1.0	0.9	0.8	4.8	5.1	5.1	7.6	7.3	7.1	6.7	6.5	6.6	6.4	6.5	6.5	5.1	5.1	5.1	1.0	1.0	0.9	

PEAK ELECTRICAL LOAD BREAKDOWN

SOURCE	KW	PCT
SYSTEMS LOAD	269.396	98.5
ELEC-DHW-HEATER	4.148	1.5
TOTAL	273.544	

ENERGY TYPE: ELECTRICITY
UNITS: MBTU

CATEGORY OF USE	
AREA LIGHTS	404.4
MISC EQUIPMT	216.6
SPACE HEAT	388.3
SPACE COOL	127.8
HEAT REJECT	6.1
PUMPS & MISC	11.8
VENT FANS	92.1
SUPPLMT HEAT	20.5
DOMHOT WATER	79.8
TOTAL	1347.4

TOTAL SITE ENERGY	1347.37 MBTU	50.1 KBTU/SQFT-YR GROSS-AREA	50.1 KBTU/SQFT-YR NET-AREA
TOTAL SOURCE ENERGY	4042.51 MBTU	150.2 KBTU/SQFT-YR GROSS-AREA	150.2 KBTU/SQFT-YR NET-AREA

PERCENT OF HOURS ANY SYSTEM ZONE OUTSIDE OF THROTTLING RANGE = 0.2
PERCENT OF HOURS ANY PLANT LOAD NOT SATISFIED = 0.0

NOTE: ENERGY IS APPORTIONED HOURLY TO ALL END-USE CATEGORIES.

MMDDHH	OPEN-REC -CHLR LOAD BTU/HR ----(1)	OPEN-REC -CHLR AVAL CAP RATIO FRAC.OR MULT. ----(8)	OPEN-REC -CHLR OPER PT LD RATIO FRAC.OR MULT. ----(10)	OPEN-REC -CHLR ADJUSTED EIR BTU/BTU ----(16)	CTANK-ST ORAGE ENERGY RELEASED BTU/HR ----(1)	CTANK-ST ORAGE ENERGY STORED BTU/HR ----(4)	CTANK-ST ORAGE TOTAL IN STORAGE BTU/HR ----(14)
713 1	0.	0.000	0.000	0.000	0.	0.	4753928.
713 2	0.	0.000	0.000	0.000	0.	0.	4749946.
713 3	0.	0.000	0.000	0.000	0.	0.	4745965.
713 4	0.	0.000	0.000	0.000	0.	0.	4742085.
713 5	0.	0.000	0.000	0.000	0.	0.	4738306.
713 6	0.	0.000	0.000	0.000	0.	0.	4734527.
713 7	0.	0.000	0.000	0.000	0.	0.	4730649.
713 8	0.	0.000	0.000	0.000	0.	0.	4726472.
713 9	0.	0.000	0.000	0.000	0.	0.	4721696.
71310	0.	0.000	0.000	0.000	0.	0.	4716521.
71311	0.	0.000	0.000	0.000	0.	0.	4711047.
71312	0.	0.000	0.000	0.000	0.	0.	4705174.
71313	0.	0.000	0.000	0.000	0.	0.	4699102.
71314	0.	0.000	0.000	0.000	320621.	0.	4692932.
71315	0.	0.000	0.000	0.000	374187.	0.	4366110.
71316	0.	0.000	0.000	0.000	380172.	0.	3985800.
71317	0.	0.000	0.000	0.000	370997.	0.	3599384.
71318	372489.	0.660	0.970	0.250	0.	372489.	3222420.
71319	372489.	0.650	0.985	0.261	0.	372489.	3589068.
71320	372489.	0.651	0.984	0.260	0.	372489.	3955840.
71321	372489.	0.651	0.984	0.260	0.	372489.	4322836.
71322	152306.	0.652	0.402	0.133	0.	152306.	4690055.
71323	0.	0.000	0.000	0.000	0.	0.	4837162.
71324	0.	0.000	0.000	0.000	0.	0.	4832063.
DAILY SUMMARY (JUL 13)							
MN	0.	0.000	0.000	0.000	0.	0.	3222420.
MX	372489.	0.660	0.985	0.261	380172.	372489.	4837162.
SM	1642264.	3.263	4.324	1.164	1445976.	1642264.	107569088.
AV	68428.	0.136	0.180	0.049	60249.	68428.	4482046.

	OPEN-REC -CHLR LOAD BTU/HR ----(1)	OPEN-REC -CHLR AVAL CAP RATIO FRAC.OR MULT. ----(8)	OPEN-REC -CHLR OPER PT LD RATIO FRAC.OR MULT. ----(10)	OPEN-REC -CHLR ADJUSTED EIR BTU/BTU ----(16)	CTANK-ST ORAGE ENERGY RELEASED BTU/HR ----(1)	CTANK-ST ORAGE ENERGY STORED BTU/HR ----(4)	CTANK-ST ORAGE TOTAL IN STORAGE BTU/HR ----(14)
714 1	0.	0.000	0.000	0.000	0.	0.	4827165.
714 2	0.	0.000	0.000	0.000	0.	0.	4822468.
714 3	0.	0.000	0.000	0.000	0.	0.	4817872.
714 4	0.	0.000	0.000	0.000	0.	0.	4813477.
714 5	0.	0.000	0.000	0.000	0.	0.	4809183.
714 6	0.	0.000	0.000	0.000	0.	0.	4804790.
714 7	209385.	1.054	0.341	0.109	440215.	0.	4800298.
714 8	205506.	1.054	0.335	0.107	440215.	0.	4355384.
714 9	274790.	1.059	0.446	0.133	440215.	0.	3910162.
71410	261418.	1.055	0.426	0.129	440215.	0.	3464832.
71411	259462.	1.055	0.422	0.128	440215.	0.	3019294.
71412	219340.	1.049	0.359	0.114	440215.	0.	2573548.
71413	225458.	1.051	0.369	0.116	440215.	0.	2127694.
71414	201051.	1.045	0.330	0.108	440215.	0.	1682832.
71415	170976.	1.049	0.280	0.095	440215.	0.	1239162.
71416	152779.	1.050	0.250	0.087	438890.	0.	795384.
71417	221592.	1.048	0.363	0.114	353020.	0.	353020.
71418	372489.	0.655	0.977	0.255	0.	372489.	0.
71419	372489.	0.651	0.983	0.260	0.	372489.	363614.
71420	372489.	0.651	0.984	0.260	0.	372489.	731952.
71421	372489.	0.652	0.982	0.259	0.	372489.	1100214.
71422	372489.	0.652	0.982	0.259	0.	372489.	1468600.
71423	372489.	0.652	0.982	0.259	0.	372489.	1837110.
71424	372489.	0.653	0.980	0.257	0.	372489.	2205744.
DAILY SUMMARY (JUL 14)							
MN	0.	0.000	0.000	0.000	0.	0.	0.
MX	372489.	1.059	0.984	0.260	440215.	372489.	4827165.
SM	5009183.	16.134	10.793	3.049	4753842.	2607425.	64923800.
AV	208716.	0.672	0.450	0.127	198077.	108643.	2705158.

	OPEN-REC -CHLR LOAD BTU/HR ----(1)	OPEN-REC -CHLR AVAL CAP RATIO FRAC.OR MULT. ----(8)	OPEN-REC -CHLR OPER PT LD RATIO FRAC.OR MULT. ----(10)	OPEN-REC -CHLR ADJUSTED EIR BTU/BTU ----(16)	CTANK-ST ORAGE ENERGY RELEASED BTU/HR ----(1)	CTANK-ST ORAGE ENERGY STORED BTU/HR ----(4)	CTANK-ST ORAGE TOTAL IN STORAGE BTU/HR ----(14)
715 1	372489.	0.653	0.980	0.257	0.	372489.	2574402.
715 2	372489.	0.653	0.980	0.257	0.	372489.	2942984.
715 3	372489.	0.653	0.980	0.257	0.	372489.	3311590.
715 4	372489.	0.654	0.979	0.257	0.	372489.	3680220.
715 5	372489.	0.654	0.979	0.257	0.	372489.	4048974.
715 6	372489.	0.654	0.978	0.256	0.	372489.	4417750.
715 7	150460.	1.034	0.250	0.088	314756.	0.	4786450.
715 8	151176.	1.039	0.250	0.087	318539.	0.	4467670.
715 9	152171.	1.046	0.250	0.087	385909.	0.	4145076.
71510	152117.	1.045	0.250	0.087	377169.	0.	3754992.
71511	152036.	1.045	0.250	0.087	371602.	0.	3373526.
71512	151541.	1.041	0.250	0.087	343196.	0.	2997604.
71513	151583.	1.042	0.250	0.087	345961.	0.	2650060.
71514	151649.	1.042	0.250	0.087	356291.	0.	2299724.
71515	151666.	1.042	0.250	0.087	351536.	0.	1939330.
71516	151442.	1.041	0.250	0.087	331388.	0.	1583866.
71517	151590.	1.042	0.250	0.087	341273.	0.	1248720.
71518	372489.	0.657	0.974	0.253	0.	372489.	903958.
71519	372489.	0.655	0.977	0.255	0.	372489.	1272984.
71520	372489.	0.655	0.977	0.255	0.	372489.	1642134.
71521	372489.	0.656	0.976	0.254	0.	372489.	2011508.
71522	372489.	0.656	0.976	0.254	0.	372489.	2381006.
71523	372489.	0.656	0.975	0.254	0.	372489.	2750628.
71524	372489.	0.657	0.975	0.254	0.	372489.	3120174.
DAILY SUMMARY (JUL 15)							
MN	150460.	0.653	0.250	0.087	0.	0.	903958.
MX	372489.	1.046	0.980	0.257	385909.	372489.	4786450.
SM	6509795.	19.973	15.455	4.278	3837620.	4842361.	68305328.
AV	271241.	0.832	0.644	0.178	159901.	201765.	2846055.
MONTHLY SUMMARY (JUL)							
MN	0.	0.000	0.000	0.000	0.	0.	0.
MX	372489.	1.059	0.985	0.261	440215.	372489.	4837162.
SM	13161242.	39.369	30.572	8.491	10037438.	9092050.	240798224.
AV	182795.	0.547	0.425	0.118	139409.	126278.	3344420.
YEARLY SUMMARY							
MN	0.	0.000	0.000	0.000	0.	0.	0.
MX	372489.	1.059	0.985	0.261	440215.	372489.	4837162.
SM	13161242.	39.369	30.572	8.491	10037438.	9092050.	240798224.
AV	182795.	0.547	0.425	0.118	139409.	126278.	3344420.

UTILITY-RATE	RESOURCE	METERS	METERED ENERGY UNITS/YR	TOTAL CHARGE ($)	VIRTUAL RATE ($/UNIT)	RATE USED ALL YEAR?
ELEC-COST	ELECTRICITY	1 2 3 4 5	394776. KWH	31197.	0.0790	YES
				==========		
				31197.		

ENERGY COST/GROSS BLDG AREA: 1.16
ENERGY COST/NET BLDG AREA: 1.16

REPORT- ES-E SUMMARY OF UTILITY-RATE: ELEC-COST

UTILITY-RATE: ELEC-COST

RESOURCE: ELECTRICITY
METERS: 1 2 3 4 5
POWER-FACTOR: 0.80

DEMAND-WINDOW: HOUR
BILLING-DAY: 31
EXCESS-KVAR-FRAC: 0.30

3413. BTU/KWH
RATE-LIMITATION: 0.0000
EXCESS-KVAR-CHG: 0.0000

RATE-QUALIFICATIONS

MIN-ENERGY: 0.0
MAX-ENERGY: 0.0
MIN-DEMAND: 0.0
MAX-DEMAND: 0.0
QUALIFY-RATE: ALL-MONTHS
USE-MIN-QUAL: NO

BLOCK-CHARGES

SUM-P-DEM
WIN-P-DEM

DEMAND-RATCHETS

MIN-MON-RATCHETS

MONTH	METERED ENERGY KWH	BILLING ENERGY KWH	METERED DEMAND KW	BILLING DEMAND KW	ENERGY CHARGE ($)	DEMAND CHARGE ($)	ENERGY CST ADJ ($)	TAXES ($)	SURCHRG ($)	FIXED CHARGE ($)	MINIMUM CHARGE ($)	VIRTUAL RATE ($/UNIT)	TOTAL CHARGE ($)
JAN	54754	54754	273.5	273.5	1981	2017	0	0	0	0	186	0.0730	3998
FEB	43796	43796	233.9	233.9	1584	1681	0	0	0	0	186	0.0746	3265
MAR	34288	34288	240.0	240.0	1246	1703	0	0	0	0	186	0.0860	2950
APR	23823	23823	143.1	143.1	877	1045	0	0	0	0	186	0.0807	1923
MAY	22355	22355	117.1	117.1	927	1122	0	0	0	0	186	0.0916	2048
JUN	26372	26372	108.1	108.1	1076	1058	0	0	0	0	186	0.0809	2134
JUL	34337	34337	126.5	126.5	1399	1160	0	0	0	0	186	0.0745	2559
AUG	30168	30168	107.5	107.5	1230	1057	0	0	0	0	186	0.0758	2287
SEP	23124	23124	123.7	123.7	961	1185	0	0	0	0	186	0.0928	2146
OCT	23074	23074	151.4	151.4	954	1182	0	0	0	0	186	0.0926	2136
NOV	30037	30037	181.0	181.0	1094	1300	0	0	0	0	186	0.0797	2395
DEC	48645	48645	233.5	233.5	1763	1595	0	0	0	0	186	0.0690	3357
TOTAL	394776	394776	273.5		15092	16105	0	0	0	0		0.0790	31197

REPORT- ES-F BLOCK-CHARGE AND RATCHET SUMMARY FOR: ELEC-COST

UTILITY-RATE: ELEC-COST
RESOURCE: ELECTRICITY
ENERGY-UNITS: KWH
DEMAND-UNITS: KW
DEMAND-WINDOW: HOUR

BLOCK-CHARGES		JAN	FEB	MAR	APR	MAY	JUN	JUL	AUG	SEP	OCT	NOV	DEC	YEAR
SUM-P-DEM	USE: TIME-OF-USE													
	METERED DEMAND:	0.0	0.0	0.0	0.0	117.1	108.1	119.1	107.5	123.7	113.0	0.0	0.0	
	BILLING DEMAND:	0.0	0.0	0.0	0.0	117.1	111.3	119.1	111.3	123.7	113.0	0.0	0.0	
	DEMAND CHGS($):	0	0	0	0	820	779	834	779	866	791	0	0	4869
WIN-P-DEM	USE: TIME-OF-USE													
	METERED DEMAND:	215.6	177.7	179.0	106.5	0.0	0.0	0.0	0.0	0.0	0.0	137.4	164.5	
	BILLING DEMAND:	215.6	177.7	179.0	111.3	0.0	0.0	0.0	0.0	0.0	0.0	137.4	164.5	
	DEMAND CHGS($):	1402	1155	1163	724	0	0	0	0	0	0	893	1069	6406
TOTAL CHARGES ($):		1402	1155	1163	724	820	779	834	779	866	791	893	1069	11274

RATCHETS	TYPE	JAN	FEB	MAR	APR	MAY	JUN	JUL	AUG	SEP	OCT	NOV	DEC
SUM-RATCH	HIGHEST	111.3	111.3	111.3	111.3	111.3	111.3	111.3	111.3	111.3	111.3	111.3	111.3

Bar/Lounge

L D L P R O C E S S O R I N P U T D A T A

Thu Nov 11 09:03:47 1993LDL RUN 1

```
*   2 * TITLE LINE-1 * SMALL BAR/LOUGE *
*   3 *       LINE-2 * DEMO DESICCANT & EVAPORATIVE COOLING *
*   4 *       LINE-3 * NEW FEATURES IN DOE2.1E RUN 1 *  ..
*   5 *
*   6 * ABORT ERRORS  ..  LIST WARNINGS  ..
*   7 * RUN-PERIOD    JAN 1  1988 THRU DEC 31 1988  ..
*   8 *
*   9 * BUILDING-LOCATION  LAT 42  LON 88 ALT 610  T-Z 6  AZ 0  ..
*  10 *
*  11 *    $ OCCUPANCY $
*  12 *
*  13 * OC1 = D-SCH (1,24) (.2,.2,0,0,0,0,.4,.4,.2,.2,.2,.3,.6,.1,.1,.1,
*  14 *             .5,.7,.5,.5,.7,.8,.8,.6)  ..
*  15 * OC2 = D-SCH (1,24) (.4,.4,0,0,0,0,.2,.2,.1,.1,.1,.2,.4,.2,.2,.2,
*  16 *             .5,.7,.8,.8,.9,.9,.9,.5)  ..
*  17 * OC3 = D-SCH (1,24) (.4,.4,0,0,0,0,0,0,.2,.3,.4,.5,.5,.6,.7,.7,
*  18 *             .8,.8,.6,.5,.5,.6,.6)  ..
*  19 * OCCUP = SCH THRU DEC 31 (WD) OC1 (SAT) OC2 (SUN,HOL) OC3  ..
*  20 *
*  21 *   $ LIGHTING $
*  22 *
*  23 * L1 = D-SCH (1,2) (.5) (3,6) (.1) (7,9) (.5) (10,18) (.4)
*  24 *            (19,24) (1)  ..
*  25 * L2 = D-SCH (1,2) (.5) (3,6) (.1) (7,12) (.5) (13,18) (.8)
*  26 *            (19,24) (1)  ..
*  27 * L3 = D-SCH (1,2) (.5) (3,9) (.1) (10,12) (.4) (13,17) (.6)
*  28 *            (18,19) (1) (20,24) (.5)  ..
*  29 * LIGHTS = SCH THRU DEC 31 (WD) L1 (SAT) L2 (SUN,HOL) L3  ..
*  30 *
*  31 *                      $  CONSTRUCTIONS $
*  32 * WA1=LAYERS  MAT (WS01,PW03,IN32,GP03)  ..
*  33 * RF1=LAYERS  MAT (BR01,PW04,IN33,AL33,AC02)  I-F-R .61  ..
*  34 *
*  35 * S-WALL  CONS  LA WA1  ..
*  36 * ROF     CONS  LA RF1  ..
*  37 * FOUND   CONS  U .26  ..
*  38 * DR1     CONS  U .59  ..   $ BACK DOOR
*  39 * GLASS1  G-T  G-T-C 3  PANES 1   ..  $ CLEAR 1/4" PLATE
*  40 *
*  41 * SET-DEFAULT FOR EXTERIOR-WALL  H 16  CONS S-WALL  ..
*  42 * SET-DEFAULT FOR WINDOW  G-T GLASS1  H 12  Y=2  ..
*  43 *
*  44 * BLDG=     SPACE  A=2160  V=25920  L-W=1.06
*  45 *                 E-W=.5  AREA/PERSON=45   E-SCH=LIGHTS
*  46 *                 P-H-G=550  L-SCH=LIGHTS  P-SCH=OCCUP  I-M=AIR-CHANGE
*  47 *                 A-C=.3  I-SCH=OCCUP  L-T=REC-FLUOR-NV  L-T-S=1  ..
*  48 *            E-W  W 40  AZ 0  X 40  Y 54  ..
*  49 *            E-W  W 54  AZ 90  X 40 ..    DOOR  H 7  W 3  X 7  CONS DR1  ..
*  50 *            E-W  W 40  AZ 180  ..    WI  W 30  X 5  OH-W 50  OH-D 10  OH-A 10
*  51 *                                                  OH-B 2  ..
*  52 *            $ WEST WALL ABUTS AJOINING BUILDING $
*  53 *            U-W  A 170  CONS FOUND  ..
*  54 *            ROOF H 54  W 40  CONS ROF  AZ 180  TILT 0  G-R 0  ..
*  55 *
*  56 * LOADS-REPORT   S (LS-A,LS-C,LS-D)  ..
*  57 * END  ..
*  58 * COMPUTE LOADS  ..
```

SPACE NAME	MULTIPLIER SPACE	MULTIPLIER FLOOR	COOLING LOAD (KBTU/HR)	TIME OF PEAK	DRY-BULB	WET-BULB	HEATING LOAD (KBTU/HR)	TIME OF PEAK	DRY-BULB	WET-BULB
BLDG	1.	1.	55.224	JUN 20 4 PM	90.F	77.F	-55.857	JAN 12 6 AM	-5.F	-6.F
SUM			55.224				-55.857			
BUILDING PEAK			55.224	JUN 20 4 PM	90.F	77.F	-55.857	JAN 12 6 AM	-5.F	-6.F

*** BUILDING ***

FLOOR AREA	2160	SQFT	201	SQMT
VOLUME	25920	CUFT	734	CUMT

	COOLING LOAD		HEATING LOAD	
TIME	JUN 20 4PM		JAN 12 6AM	
DRY-BULB TEMP	90F	32C	-5F	-21C
WET-BULB TEMP	77F	25C	-6F	-21C

	SENSIBLE (KBTU/H)	SENSIBLE (KW)	LATENT (KBTU/H)	LATENT (KW)	SENSIBLE (KBTU/H)	SENSIBLE (KW)
WALL CONDUCTION	8.056	2.360	0.000	0.000	-19.553	-5.729
ROOF CONDUCTION	15.163	4.443	0.000	0.000	-19.291	-5.652
WINDOW GLASS+FRM COND	5.603	1.642	0.000	0.000	-21.140	-6.194
WINDOW GLASS SOLAR	10.591	3.103	0.000	0.000	1.840	0.539
DOOR CONDUCTION	0.335	0.098	0.000	0.000	-0.718	-0.210
INTERNAL SURFACE COND	0.000	0.000	0.000	0.000	0.000	0.000
UNDERGROUND SURF COND	-0.530	-0.155	0.000	0.000	-1.326	-0.389
OCCUPANTS TO SPACE	8.351	2.447	8.966	2.627	1.323	0.388
LIGHT TO SPACE	4.127	1.209	0.000	0.000	2.189	0.641
EQUIPMENT TO SPACE	2.032	0.595	0.000	0.000	0.819	0.240
PROCESS TO SPACE	0.000	0.000	0.000	0.000	0.000	0.000
INFILTRATION	1.497	0.439	2.815	0.825	0.000	0.000
TOTAL	55.224	16.181	11.781	3.452	-55.857	-16.366
TOTAL LOAD	67.005 KBTU/H		19.632 KW		-55.857 KBTU/H	-16.366 KW
TOTAL LOAD / AREA	31.02BTU/H.SQFT		97.834 W /SQMT		25.860BTU/H.SQFT	81.557 W /SQMT

```
*************************************************************
*                                                           *
*  NOTE  1)THE ABOVE LOADS EXCLUDE OUTSIDE VENTILATION AIR  *
*  ----     LOADS                                           *
*        2)TIMES GIVEN IN STANDARD TIME FOR THE LOCATION    *
*          IN CONSIDERATION                                 *
*                                                           *
*************************************************************
```

SMALL BAR/LOUGE DEMO DESICCANT & EVAPORATIVE COOLING DOE-2.1E-001 Thu Nov 11 09:03:47 1993LDL RUN 1
NEW FEATURES IN DOE2.1E RUN 1
REPORT- LS-D BUILDING MONTHLY LOADS SUMMARY WEATHER FILE- TRY CHICAGO

	COOLING						HEATING						ELEC	
MONTH	COOLING ENERGY (MBTU)	TIME OF MAX DY	TIME OF MAX HR	DRY-BULB TEMP	WET-BULB TEMP	MAXIMUM COOLING LOAD (KBTU/HR)	HEATING ENERGY (MBTU)	TIME OF MAX DY	TIME OF MAX HR	DRY-BULB TEMP	WET-BULB TEMP	MAXIMUM HEATING LOAD (KBTU/HR)	ELEC-TRICAL ENERGY (KWH)	MAXIMUM ELEC LOAD (KW)
JAN	0.55628	25	13	45.F	40.F	24.590	-16.395	12	6	-5.F	-6.F	-55.857	1309.	3.370
FEB	0.69640	17	13	40.F	33.F	24.807	-13.867	4	6	7.F	6.F	-49.212	1180.	3.370
MAR	0.99907	3	17	78.F	61.F	25.923	-9.111	24	6	8.F	7.F	-48.669	1314.	3.370
APR	5.16373	27	17	85.F	62.F	37.526	-3.772	9	5	26.F	25.F	-30.873	1272.	3.370
MAY	8.18692	21	12	87.F	76.F	46.495	-1.679	7	5	33.F	29.F	-25.098	1309.	3.370
JUN	13.56395	20	15	90.F	77.F	55.224	-0.369	1	5	48.F	47.F	-11.998	1272.	3.370
JUL	19.79075	13	17	99.F	77.F	53.571	-0.026	6	5	61.F	55.F	-4.635	1316.	3.370
AUG	16.95852	22	14	83.F	70.F	50.452	-0.047	5	5	55.F	54.F	-6.686	1307.	3.370
SEP	9.02880	19	15	86.F	65.F	44.072	-1.182	23	5	36.F	33.F	-23.403	1265.	3.370
OCT	5.62650	10	15	68.F	54.F	38.057	-3.019	21	5	30.F	29.F	-28.739	1309.	3.370
NOV	2.15443	2	13	74.F	61.F	44.681	-8.354	15	6	28.F	26.F	-35.472	1258.	3.370
DEC	0.25199	10	15	41.F	35.F	21.429	-14.608	26	7	15.F	15.F	-44.958	1300.	3.370
TOTAL	82.977						-72.430						15408.	
MAX						55.224						-55.857		3.370

Bar/Lounge — System 1

S D L P R O C E S S O R I N P U T D A T A

Thu Nov 11 09:03:47 1993SDL RUN 1

```
* 60 *
* 61 * TITLE  LINE-4 * SYSTEM 1: PKG ROOFTOP DESICCANT COOLER *
* 62 *       LINE-5 * 1000 OUTSIDE AIR UNIT ALLYEAR *  ..
* 63 *
* 64 * SYSTEMS-REPORT   S (SS-A,SS-J,SS-I,SS-N,SS-O)  ..
* 65 *
* 66 * FANSON= SCH THRU DEC 31 (MON,SAT) (1,24) (1)
* 67 *                          (SUN,HOL) (1,2) (1) (3,9)(0) (10,24)(1)  ..
* 68 * C-SETPT=SCH THRU DEC 31 (ALL) (1,24) (76)  ..
* 69 * H-SETPT=SCH THRU DEC 31 (ALL) (1,24) (72)  ..
* 70 * ENV=  Z-C  D-H-T=72  D-C-T=74  H-T-SCH=H-SETPT  C-T-SCH=C-SETPT    ..
* 71 *
* 72 * BLDG= Z  Z-C=ENV  O-CFM/P=20  CFM/SQFT=.7  ..
* 73 *
* 74 * SYS1= SYSTEM  S-TYPE=PTGSD
* 75 *               SUPPLY-CFM=2500  MIN-CFM-RATIO=.4  HEATING-CAPACITY=-120000
* 76 *               SUPPLY-STATIC=2.5  SUPPLY-EFF=.47  MAX-HUMIDITY=60
* 77 *               F-SCH=FANSON  Z-N=(BLDG)   ..
* 78 *
* 79 * PLANT1 = PLANT-ASSIGNMENT  SYSTEM-NAMES = (SYS1)
* 80 *                            DHW-GAL/MIN  = .666
* 81 *                            DHW-SCH      = DOMHW  ..
* 82 *
* 83 * D1 = D-SCH (1,7) (0)  (8,21) (.1,.2,.3,.4,.55,.6,.6,.45,.4,.45,.45,.4,.3,.3)
* 84 *                      (22,24) (0)  ..
* 85 * D2 = D-SCH (1,7) (0)  (8,22) (.15,.2,.25,.4,.5,.55,.55,.45,.45,.45,.45,.4,.35,
* 86 *                              .25,.2)  (23,24) (0)  ..
* 87 * D3 = D-SCH (1,9) (0)  (10,19) (.1,.25,.3,.35,.35,.3,.3,.35,.3,.2)
* 88 *                      (20,24) (0)  ..
* 89 * DOMHW = SCH THRU DEC 31 (WD) D1  (SAT) D2  (SUN,HOL) D3  ..
* 90 * END  ..
* 91 * COMPUTE SYSTEMS  ..
* 92 * INPUT PLANT  ..
```

P D L P R O C E S S O R I N P U T D A T A

Thu Nov 11 09:03:47 1993PDL RUN 1

```
* 93 * PLANT1 = PLANT-ASSIGNMENT  ..
* 94 * PLANT-REPORT   S (BEPS)  ..
* 95 * END  ..
* 96 * COMPUTE PLANT  ..
* 97 * INPUT ECONOMICS  ..
```

E D L P R O C E S S O R I N P U T D A T A

Thu Nov 11 09:03:47 1993EDL RUN 1

```
*  98 *
*  99 * ECONOMICS-REPORT  S (ES-D,ES-E)  ..
* 100 *
* 101 * ELEC-COST = UTILITY-RATE  RESOURCE = ELECTRICITY
* 102 *                          MONTH-CHGS = (21.75)
* 103 *                          DEMAND-CHGS = (.81)
* 104 *                          BLOCK-CHARGES = (E-SM,E-WN)  ..
* 105 *
* 106 * E-SM      = BLOCK-CHARGE  BLOCK-SCH   = SEASON
* 107 *                          SCH-FLAG    = 2
* 108 *                          BLOCK1-TYPE = ENERGY
* 109 *                          BLOCK1-DATA = (1250,.0829)
* 110 *                          BLOCK2-TYPE = KWH/KW
* 111 *                          BLOCK2-DATA = (125,.0829,0
* 112 *                                           1,.0514,0)  ..
* 113 *
* 114 * E-WN      = BLOCK-CHARGE  BLOCK-SCH   = SEASON
* 115 *                          SCH-FLAG    = 1
* 116 *                          BLOCK1-TYPE = ENERGY
* 117 *                          BLOCK1-DATA = (1250,.0778)
* 118 *                          BLOCK2-TYPE = KWH/KW
* 119 *                          BLOCK2-DATA = (125,.0778,0
* 120 *                                           1,.0514,0)  ..
* 121 *
* 122 * SEASON    = SCHEDULE THRU APR 30 (ALL) (1,24)(1)
* 123 *                    THRU OCT 31 (ALL) (1,24)(2)
* 124 *                    THRU DEC 31 (ALL) (1,24)(1)  ..
* 125 *
* 126 * GAS-COST  = UTILITY-RATE  RESOURCE = NATURAL-GAS
* 127 *                          MONTH-CHGS = (10.73)
* 128 *                          BLOCK-CHARGES = (GAS-CH)  ..
* 129 *
* 130 * GAS-CH    = BLOCK-CHARGE  BLOCK1-TYPE = ENERGY
* 131 *                          BLOCK1-DATA = (400,.643
* 132 *                                           1,.4943)  ..
* 133 *
* 134 * END  ..
* 135 * COMPUTE ECONOMICS  ..
* 136 * INPUT SYSTEMS  ..
```

SYSTEM NAME	SYSTEM TYPE	ALTITUDE MULTIPLIER	FLOOR AREA (SQFT)	MAX PEOPLE
SYS1	PTSGD	1.020	2160.0	48.

SUPPLY FAN (CFM)	ELEC (KW)	DELTA-T (F)	RETURN FAN (CFM)	ELEC (KW)	DELTA-T (F)	OUTSIDE AIR RATIO	COOLING CAPACITY (KBTU/HR)	SENSIBLE (SHR)	HEATING CAPACITY (KBTU/HR)	COOLING EIR (BTU/BTU)	HEATING EIR (BTU/BTU)
2550.	1.561	1.9	0.	0.000	0.0	0.384	0.000	0.000	-120.000	0.00	0.37

ZONE NAME	SUPPLY FLOW (CFM)	EXHAUST FLOW (CFM)	FAN (KW)	MINIMUM FLOW RATIO	OUTSIDE AIR FLOW (CFM)	COOLING CAPACITY (KBTU/HR)	SENSIBLE (SHR)	EXTRACTION RATE (KBTU/HR)	HEATING CAPACITY (KBTU/HR)	ADDITION RATE (KBTU/HR)	MULTIPLIER
BLDG	2550.	0.	0.000	0.400	979.	0.00	0.00	45.16	0.00	-45.99	1.0

SMALL BAR/LOUGE DEMO DESICCANT & EVAPORATIVE COOLING DOE-2.1E-001 Thu Nov 11 09:03:47 1993SDL RUN 1
NEW FEATURES IN DOE2.1E RUN 1 SYSTEM 1: PKG ROOFTOP DESICCANT COOLER 100% OUTSIDE AIR UNIT ALLYEAR
REPORT- SS-P LOAD, ENERGY AND PART LOAD DHW TANK OPERATION FOR PLANT1 WEATHER FILE- TRY CHICAGO

TANK SIZE is 30.0 (GAL) HEATER CAP = 25.774 (KBTU/HR) FLOW RATE = 0.666 (GAL/MIN) PUMP = 0.000 (KW)

MONTH	SUM PEAK	UNIT LOAD (MBTU) (KBTU/HR)	ENERGY USE (MBTU) (KBTU/HR)	RCV EN USE (MBTU) (KBTU/HR)	PUMP ENERGY (KWH) (KW)	Number of hours within each PART LOAD range 00 10	10 20	20 30	30 40	40 50	50 60	60 70	70 80	80 90	90 100	100 +	TOTAL RUN HOURS
JAN	SUM	5.160	8.354	0.000	0.000	329	26	41	16	107	70	85	30	40	0	0	744
	PEAK	19.998	28.991	0.000	0.000												
	DAY/HR	29/14	29/14	31/24	31/24												
FEB	SUM	4.837	7.807	0.000	0.000	296	24	36	13	96	65	77	27	38	0	0	672
	PEAK	20.598	29.837	0.000	0.000												
	DAY/HR	26/14	26/14	28/24	28/24												
MAR	SUM	5.390	8.675	0.000	0.000	322	27	39	12	101	77	89	31	46	0	0	744
	PEAK	20.198	29.273	0.000	0.000												
	DAY/HR	31/14	31/14	31/24	31/24												
APR	SUM	4.947	7.993	0.000	0.000	312	26	38	12	98	156	4	74	0	0	0	720
	PEAK	19.198	27.862	0.000	0.000												
	DAY/HR	30/14	30/14	30/ 1	30/ 1												
MAY	SUM	4.592	7.499	0.000	0.000	329	31	36	100	93	80	35	40	0	0	0	744
	PEAK	17.799	25.886	0.000	0.000												
	DAY/HR	28/14	28/14	31/ 1	31/ 1												
JUN	SUM	4.225	6.909	0.000	0.000	312	30	46	98	74	86	74	0	0	0	0	720
	PEAK	16.399	23.911	0.000	0.000												
	DAY/HR	30/14	30/14	30/ 1	30/ 1												
JUL	SUM	3.990	6.582	0.000	0.000	325	31	51	103	156	36	42	0	0	0	0	744
	PEAK	15.199	22.218	0.000	0.000												
	DAY/HR	30/14	30/14	31/ 1	31/ 1												
AUG	SUM	3.882	6.420	0.000	0.000	326	31	48	105	156	78	0	0	0	0	0	744
	PEAK	14.799	21.654	0.000	0.000												
	DAY/HR	31/14	31/14	31/ 1	31/ 1												
SEP	SUM	3.848	6.351	0.000	0.000	316	30	47	102	150	33	42	0	0	0	0	720
	PEAK	15.199	22.218	0.000	0.000												
	DAY/HR	30/14	30/14	30/ 1	30/ 1												
OCT	SUM	4.179	6.877	0.000	0.000	329	31	52	107	150	35	40	0	0	0	0	744
	PEAK	16.199	23.629	0.000	0.000												
	DAY/HR	29/14	29/14	31/24	31/24												
NOV	SUM	4.376	7.158	0.000	0.000	320	30	34	98	90	80	28	40	0	0	0	720
	PEAK	17.599	25.604	0.000	0.000												
	DAY/HR	30/14	30/14	30/24	30/24												
DEC	SUM	4.898	7.961	0.000	0.000	330	27	39	101	22	150	4	71	0	0	0	744
	PEAK	18.998	27.580	0.000	0.000												
	DAY/HR	30/14	30/14	31/24	31/24												
YR	SUM	54.324	88.587	0.000	0.000	3846	344	507	867	1293	946	520	313	124	0	0	8760
	PEAK	20.598	29.837	0.000	0.000												
	MON/DAY	2/26	2/26	12/31	12/31												

SMALL BAR/LOUGE DEMO DESICCANT & EVAPORATIVE COOLING DOE-2.1E-001 Thu Nov 11 09:03:47 1993SDL RUN 1
NEW FEATURES IN DOE2.1E RUN 1 SYSTEM 1: PKG ROOFTOP DESICCANT COOLER 100% OUTSIDE AIR UNIT ALLYEAR
REPORT- SS-A SYSTEM MONTHLY LOADS SUMMARY FOR SYS1 WEATHER FILE- TRY CHICAGO

	COOLING						HEATING						ELEC	
MONTH	COOLING ENERGY (MBTU)	TIME OF MAX DY	TIME OF MAX HR	DRY-BULB TEMP	WET-BULB TEMP	MAXIMUM COOLING LOAD (KBTU/HR)	HEATING ENERGY (MBTU)	TIME OF MAX DY	TIME OF MAX HR	DRY-BULB TEMP	WET-BULB TEMP	MAXIMUM HEATING LOAD (KBTU/HR)	ELEC-TRICAL ENERGY (KWH)	MAXIMUM ELEC LOAD (KW)
JAN	0.00000					0.000	-48.379	12	5	-4.F	-5.F	-120.007	1615.	3.805
FEB	0.00000					0.000	-41.778	8	6	5.F	4.F	-110.684	1458.	3.805
MAR	0.02939	3	15	76.F	65.F	18.945	-33.378	24	6	8.F	7.F	-107.694	1626.	3.805
APR	0.62103	28	15	78.F	68.F	44.721	-16.073	9	6	26.F	25.F	-75.526	1597.	5.848
MAY	2.64819	21	13	87.F	76.F	108.573	-8.962	7	6	33.F	29.F	-63.324	1650.	5.810
JUN	8.30279	20	18	91.F	78.F	161.118	-2.133	1	6	48.F	47.F	-35.103	1654.	5.542
JUL	27.75812	13	17	97.F	78.F	145.972	-0.167	6	6	61.F	55.F	-12.520	1758.	5.417
AUG	18.81185	26	18	93.F	75.F	109.287	-0.428	5	6	55.F	54.F	-22.176	1703.	5.836
SEP	3.66166	11	15	87.F	72.F	85.873	-6.178	23	6	36.F	33.F	-58.722	1616.	5.481
OCT	0.63547	30	19	73.F	67.F	33.535	-13.554	21	6	30.F	29.F	-69.355	1643.	5.852
NOV	0.06847	1	12	69.F	61.F	26.724	-28.486	14	10	29.F	28.F	-86.666	1561.	4.902
DEC	0.00000					0.000	-42.858	22	6	12.F	12.F	-98.674	1605.	3.805
TOTAL	62.537						-242.376						19485.	
MAX						161.118						-120.007		5.852

MONTH	SENSIBLE COOLING ENERGY (MBTU)	LATENT COOLING ENERGY (MBTU)	MAX TOTAL COOLING ENERGY (KBTU/HR)	SENSIBLE HEAT RATIO AT MAX	TIME OF MAX DY	TIME OF MAX HR	SENSIBLE HEATING ENERGY (MBTU)	LATENT HEATING ENERGY (MBTU)	MAX TOTAL HEATING ENERGY (KBTU/HR)
JAN	0.00000	0.00616	0.000				-48.37899	0.00000	-120.00713
FEB	0.00000	0.00265	0.000				-41.77792	0.00000	-110.68431
MAR	0.00000	0.04787	18.945	0.993	3	15	-33.37807	0.00000	-107.694
APR	0.52540	0.09563	44.721	0.992	28	15	-16.07310	0.00000	-75.526
MAY	2.45069	0.19749	108.573	0.991	21	13	-8.96229	0.00000	-63.324
JUN	8.06560	0.23719	161.118	0.991	20	18	-2.13270	0.00000	-35.103
JUL	27.44247	0.31565	145.972	0.993	13	17	-0.16679	0.00000	-12.520
AUG	18.50900	0.30285	109.287	0.993	26	18	-0.42839	0.00000	-22.176
SEP	3.47176	0.18989	85.873	0.993	11	15	-6.17842	0.00000	-58.722
OCT	0.50613	0.12934	33.535	0.991	30	19	-13.55433	0.00000	-69.355
NOV	0.00541	0.06307	26.724	0.992	1	12	-28.48648	0.00000	-86.666
DEC	0.00000	0.00408	0.000				-42.85814	0.00000	-98.67354
TOTAL	60.945	1.592					-242.376	0.000	
MAX			161.118	0.991					-120.007

	-----COOLING-----				---HEATING---			DAY COOLING PEAK			
	JUN 20				JAN 12			JUL 13			
HOUR	HOURLY COOLING LOAD (KBTU)	SENSIBLE HEAT RATIO	DRY-BULB TEMP	WET-BULB TEMP	HOURLY HEATING LOAD (KBTU)	DRY-BULB TEMP	WET-BULB TEMP	HOURLY COOLING LOAD (KBTU)	SENSIBLE HEAT RATIO	DRY-BULB TEMP	WET-BULB TEMP
1	0.000	0.000	68.F	64.F	-103.826	5.F	4.F	30.538	0.993	76.F	66.F
2	0.000	0.000	68.F	64.F	-107.950	3.F	2.F	18.680	0.992	74.F	66.F
3	0.000	0.000	66.F	62.F	-114.279	1.F	0.F	15.222	0.992	74.F	65.F
4	0.000	0.000	66.F	62.F	-118.998	-2.F	-3.F	0.000	0.000	73.F	62.F
5	0.000	0.000	65.F	62.F	-120.007	-4.F	-5.F	0.000	0.000	72.F	62.F
6	0.000	0.000	65.F	62.F	-120.007	-5.F	-6.F	14.287	0.993	72.F	63.F
7	0.000	0.000	67.F	64.F	-119.991	-6.F	-7.F	21.575	0.992	73.F	65.F
8	0.000	0.000	73.F	65.F	-120.002	-7.F	-7.F	36.749	0.991	76.F	69.F
9	32.467	0.991	76.F	67.F	-119.271	-8.F	-8.F	57.927	0.992	82.F	72.F
10	58.579	0.992	80.F	71.F	-111.181	-7.F	-7.F	79.720	0.992	86.F	74.F
11	82.219	0.992	83.F	72.F	-97.790	-4.F	-5.F	101.353	0.992	89.F	76.F
12	103.466	0.991	84.F	74.F	-84.417	0.F	0.F	134.434	0.992	93.F	78.F
13	109.751	0.992	85.F	74.F	-73.982	4.F	2.F	136.262	0.992	95.F	78.F
14	126.316	0.992	88.F	75.F	-71.538	6.F	4.F	130.711	0.993	96.F	77.F
15	148.153	0.992	90.F	77.F	-72.750	4.F	2.F	131.647	0.993	97.F	77.F
16	154.535	0.991	90.F	78.F	-77.609	3.F	1.F	145.972	0.993	97.F	78.F
17	161.118	0.991	91.F	78.F	-87.100	1.F	0.F	144.801	0.994	99.F	77.F
18	146.005	0.992	90.F	77.F	-96.349	-2.F	-3.F	136.317	0.994	97.F	76.F
19	128.684	0.991	89.F	78.F	-94.597	-4.F	-5.F	122.701	0.994	95.F	75.F
20	91.020	0.990	79.F	74.F	-100.752	-4.F	-5.F	116.821	0.993	93.F	75.F
21	49.576	0.990	70.F	67.F	-99.767	-3.F	-4.F	105.717	0.993	90.F	74.F
22	37.594	0.990	69.F	66.F	-97.856	-3.F	-4.F	94.249	0.993	87.F	73.F
23	31.923	0.991	70.F	65.F	-97.832	-2.F	-3.F	85.562	0.992	86.F	73.F
24	25.428	0.992	71.F	64.F	-99.095	-1.F	-2.F	66.463	0.992	85.F	73.F
	---				---			---			
SUM								1927.708			
MAX	161.118				-120.007						

SYSTEM-TYPE	PTSGD	SQFT/TON	160.9
COOLING PEAK	74.59 (BTU/HR- SQFT)	HEATING PEAK	-55.56 (BTU/HR- SQFT)
SUPPLY AIR PEAK FLOW	1.18 (CFM/SQFT)	MIN-OA/PERSON	20.40 (CFM)
OA FRAC AT CLG PEAK	1.000	OA FRAC AT HTG PEAK	0.960

* ASTERISKS INDICATE HOURS LOADS NOT MET

TOTAL HOURS AT RELATIVE HUMIDITY LEVEL AND TIME OF DAY

HOUR	1AM	2	3	4	5	6	7	8	9	10	11	12	1PM	2	3	4	5	6	7	8	9	10	11	12	TOTAL
80-100	0	0	0	1	1	0	0	0	0	0	0	0	0	0	0	1	0	0	0	0	0	0	0	0	3
70-80	3	5	4	4	5	10	9	1	0	3	1	3	0	0	0	1	2	1	2	3	3	5	4	2	71
60-70	30	26	29	28	33	40	37	28	23	17	14	9	4	3	2	3	3	6	9	13	17	23	23	26	446
50-60	63	48	42	40	36	42	45	51	63	50	43	55	58	57	59	60	71	60	54	50	62	73	66	73	1321
40-50	54	35	31	31	31	28	32	42	57	80	88	94	63	57	55	95	102	108	100	102	97	76	77	43	1578
30-40	47	45	43	44	39	37	49	46	45	46	55	62	95	84	91	55	67	75	73	84	89	95	94	86	1546
0-30	168	172	154	155	158	146	131	135	149	169	164	142	145	164	158	150	120	115	127	113	97	93	101	135	3361

TOTAL HOURS AT TEMPERATURE LEVEL AND TIME OF DAY

HOUR	1AM	2	3	4	5	6	7	8	9	10	11	12	1PM	2	3	4	5	6	7	8	9	10	11	12	TOTAL
ABOVE 85	0	0	0	0	0	0	0	0	0	0	0	0	0	0	0	0	0	0	0	0	0	0	0	0	0
80-85	0	0	0	0	0	0	0	0	0	0	0	0	0	0	0	0	0	0	0	0	0	0	0	0	0
75-80	70	37	29	25	22	32	32	43	76	93	114	133	138	146	146	151	151	144	136	124	116	111	103	84	2256
70-75	295	294	274	278	281	270	270	259	261	271	251	232	227	219	219	214	214	221	229	241	249	254	262	281	6066
65-70	0	0	0	0	0	1	1	1	0	1	0	0	0	0	0	0	0	0	0	0	0	0	0	0	4
60-65	0	0	0	0	0	0	0	0	0	0	0	0	0	0	0	0	0	0	0	0	0	0	0	0	0
BELOW 60	0	0	0	0	0	0	0	0	0	0	0	0	0	0	0	0	0	0	0	0	0	0	0	0	0

SMALL BAR/LOUGE DEMO DESICCANT & EVAPORATIVE COOLING DOE-2.1E-001 Thu Nov 11 09:03:47 1993PDL RUN 1
NEW FEATURES IN DOE2.1E RUN 1 SYSTEM 1: PKG ROOFTOP DESICCANT COOLER 100% OUTSIDE AIR UNIT ALLYEAR
REPORT- PS-B MONTHLY UTILITY AND FUEL USE SUMMARY WEATHER FILE- TRY CHICAGO

MONTH	BTU/UNIT:	ELECTRICITY METER-1 3413./KWH	NATURAL-GAS METER-1 100000./THERM
JAN			
ENERGY CONSUMPTION (UNITS/MO)		1614.6	652.7
PEAK DEMAND (UNITS/HR OR DAY)		3.8	1.5
	PEAK DAY/HR	1/18	1/11
FEB			
ENERGY CONSUMPTION (UNITS/MO)		1457.9	569.6
PEAK DEMAND (UNITS/HR OR DAY)		3.8	1.3
	PEAK DAY/HR	1/19	4/ 9
MAR			
ENERGY CONSUMPTION (UNITS/MO)		1625.7	479.7
PEAK DEMAND (UNITS/HR OR DAY)		3.8	1.3
	PEAK DAY/HR	1/19	24/ 8
APR			
ENERGY CONSUMPTION (UNITS/MO)		1597.1	275.3
PEAK DEMAND (UNITS/HR OR DAY)		5.8	0.9
	PEAK DAY/HR	13/19	8/11
MAY			
ENERGY CONSUMPTION (UNITS/MO)		1650.1	201.5
PEAK DEMAND (UNITS/HR OR DAY)		5.8	0.8
	PEAK DAY/HR	20/22	7/ 6
JUN			
ENERGY CONSUMPTION (UNITS/MO)		1653.6	155.8
PEAK DEMAND (UNITS/HR OR DAY)		5.5	0.9
	PEAK DAY/HR	15/20	20/18
JUL			
ENERGY CONSUMPTION (UNITS/MO)		1757.7	251.3
PEAK DEMAND (UNITS/HR OR DAY)		5.4	0.8
	PEAK DAY/HR	23/22	13/18
AUG			
ENERGY CONSUMPTION (UNITS/MO)		1703.2	209.1
PEAK DEMAND (UNITS/HR OR DAY)		5.8	0.8
	PEAK DAY/HR	5/24	21/18
SEP			
ENERGY CONSUMPTION (UNITS/MO)		1616.0	164.9
PEAK DEMAND (UNITS/HR OR DAY)		5.5	0.7
	PEAK DAY/HR	15/21	23/ 6
OCT			
ENERGY CONSUMPTION (UNITS/MO)		1642.5	234.6
PEAK DEMAND (UNITS/HR OR DAY)		5.9	0.8
	PEAK DAY/HR	5/22	2/ 8
NOV			
ENERGY CONSUMPTION (UNITS/MO)		1561.0	407.6
PEAK DEMAND (UNITS/HR OR DAY)		4.9	1.1
	PEAK DAY/HR	2/20	14/11
DEC			
ENERGY CONSUMPTION (UNITS/MO)		1605.5	583.8
PEAK DEMAND (UNITS/HR OR DAY)		3.8	1.2
	PEAK DAY/HR	1/19	26/10
TOTAL			
ENERGY CONSUMPTION (UNITS/YR)		19485.0	4185.9
PEAK DEMAND (UNITS/HR OR DAY)		5.9	1.5

ELECTRICAL LOADS	KWH SUPPLIED	PCT OF TOTAL LOAD
ELECTRICITY	19485.0	100.0
LOAD SATISFIED	19485.0	100.0
TOTAL LOAD ON PLANT	19485.2	

SUMMARY OF LOADS MET

TYPE OF LOAD	TOTAL LOAD (MBTU)	LOAD SATISFIED (MBTU)	TOTAL OVERLOAD (MBTU)	PEAK OVERLOAD (MBTU)	HOURS OVERLOADED
ELECTRICAL LOADS	66.5	66.5	0.000	0.000	0

ENERGY TYPE: UNITS: MBTU	ELECTRICITY	NATURAL-GAS
CATEGORY OF USE		
AREA LIGHTS	35.7	0.0
MISC EQUIPMT	16.9	0.0
SPACE HEAT	0.0	285.1
SPACE COOL	0.0	44.9
VENT FANS	13.9	0.0
DOMHOT WATER	0.0	88.6
TOTAL	66.5	418.6

TOTAL SITE ENERGY	485.09 MBTU	224.6 KBTU/SQFT-YR GROSS-AREA	224.6 KBTU/SQFT-YR NET-AREA
TOTAL SOURCE ENERGY	618.12 MBTU	286.2 KBTU/SQFT-YR GROSS-AREA	286.2 KBTU/SQFT-YR NET-AREA

PERCENT OF HOURS ANY SYSTEM ZONE OUTSIDE OF THROTTLING RANGE = 0.0
PERCENT OF HOURS ANY PLANT LOAD NOT SATISFIED = 0.0

NOTE: ENERGY IS APPORTIONED HOURLY TO ALL END-USE CATEGORIES.

UTILITY-RATE	RESOURCE	METERS	METERED ENERGY UNITS/YR	TOTAL CHARGE ($)	VIRTUAL RATE ($/UNIT)	RATE USED ALL YEAR?
ELEC-COST	ELECTRICITY	1 2 3 4 5	19485. KWH	1877.	0.0963	YES
GAS-COST	NATURAL-GAS	1 2 3 4 5	4186. THERM	2717.	0.6491	YES
				==========		
				4594.		

ENERGY COST/GROSS BLDG AREA: 2.13
ENERGY COST/NET BLDG AREA: 2.13

SMALL BAR/LOUGE DEMO DESICCANT & EVAPORATIVE COOLING DOE-2.1E-001 Thu Nov 11 09:03:47 1993EDL RUN 1
NEW FEATURES IN DOE2.1E RUN 1 SYSTEM 1: PKG ROOFTOP DESICCANT COOLER 100% OUTSIDE AIR UNIT ALLYEAR
REPORT- ES-E SUMMARY OF UTILITY-RATE: ELEC-COST

UTILITY-RATE: ELEC-COST
RESOURCE: ELECTRICITY
METERS: 1 2 3 4 5
POWER-FACTOR: 0.80
DEMAND-WINDOW: HOUR
BILLING-DAY: 31
EXCESS-KVAR-FRAC: 0.30
3413. BTU/KWH
RATE-LIMITATION: 0.0000
EXCESS-KVAR-CHG: 0.0000

RATE-QUALIFICATIONS

MIN-ENERGY:	0.0
MAX-ENERGY:	0.0
MIN-DEMAND:	0.0
MAX-DEMAND:	0.0
QUALIFY-RATE:	ALL-MONTHS
USE-MIN-QUAL:	NO

BLOCK-CHARGES
E-SM
E-WN

DEMAND-RATCHETS

MIN-MON-RATCHETS

MONTH	METERED ENERGY KWH	BILLING ENERGY KWH	METERED DEMAND KW	BILLING DEMAND KW	ENERGY CHARGE ($)	DEMAND CHARGE ($)	ENERGY CST ADJ ($)	TAXES ($)	SURCHRG ($)	FIXED CHARGE ($)	MINIMUM CHARGE ($)	VIRTUAL RATE ($/UNIT)	TOTAL CHARGE ($)
JAN	1615	1615	3.8	3.8	126	3	0	0	0	22	0	0.0932	150
FEB	1458	1458	3.8	3.8	113	3	0	0	0	22	0	0.0948	138
MAR	1626	1626	3.8	3.8	126	3	0	0	0	22	0	0.0931	151
APR	1597	1597	5.8	5.8	124	5	0	0	0	22	0	0.0944	151
MAY	1650	1650	5.8	5.8	137	5	0	0	0	22	0	0.0989	163
JUN	1654	1654	5.5	5.5	137	4	0	0	0	22	0	0.0988	163
JUL	1758	1758	5.4	5.4	146	4	0	0	0	22	0	0.0978	172
AUG	1703	1703	5.8	5.8	141	5	0	0	0	22	0	0.0984	168
SEP	1616	1616	5.5	5.5	134	4	0	0	0	22	0	0.0991	160
OCT	1643	1643	5.9	5.9	136	5	0	0	0	22	0	0.0990	163
NOV	1561	1561	4.9	4.9	121	4	0	0	0	22	0	0.0943	147
DEC	1605	1605	3.8	3.8	125	3	0	0	0	22	0	0.0933	150
TOTAL	19485	19485	5.9		1567	49	0	0	0	261		0.0963	1877

SMALL BAR/LOUGE DEMO DESICCANT & EVAPORATIVE COOLING DOE-2.1E-001 Thu Nov 11 09:03:47 1993EDL RUN 1
NEW FEATURES IN DOE2.1E RUN 1 SYSTEM 1: PKG ROOFTOP DESICCANT COOLER 100% OUTSIDE AIR UNIT ALLYEAR
REPORT- ES-E SUMMARY OF UTILITY-RATE: GAS-COST

UTILITY-RATE: GAS-COST
RESOURCE: NATURAL-GAS
METERS: 1 2 3 4 5
DEMAND-WINDOW: HOUR
BILLING-DAY: 31
100000. BTU/THERM
RATE-LIMITATION: 0.0000

RATE-QUALIFICATIONS

MIN-ENERGY: 0.0
MAX-ENERGY: 0.0
MIN-DEMAND: 0.0
MAX-DEMAND: 0.0
QUALIFY-RATE: ALL-MONTHS
USE-MIN-QUAL: NO

BLOCK-CHARGES
GAS-CH

DEMAND-RATCHETS

MIN-MON-RATCHETS

MONTH	METERED ENERGY THERM	BILLING ENERGY THERM	METERED DEMAND THERMS	BILLING DEMAND THERMS	ENERGY CHARGE ($)	DEMAND CHARGE ($)	ENERGY CST ADJ ($)	TAXES ($)	SURCHRG ($)	FIXED CHARGE ($)	MINIMUM CHARGE ($)	VIRTUAL RATE ($/UNIT)	TOTAL CHARGE ($)
JAN	653	653	1.5	1.5	382	0	0	0	0	11	0	0.6019	393
FEB	570	570	1.3	1.3	341	0	0	0	0	11	0	0.6176	352
MAR	480	480	1.3	1.3	297	0	0	0	0	11	0	0.6407	307
APR	275	275	0.9	0.9	177	0	0	0	0	11	0	0.6820	188
MAY	201	201	0.8	0.8	130	0	0	0	0	11	0	0.6963	140
JUN	156	156	0.9	0.9	100	0	0	0	0	11	0	0.7119	111
JUL	251	251	0.8	0.8	162	0	0	0	0	11	0	0.6857	172
AUG	209	209	0.8	0.8	134	0	0	0	0	11	0	0.6943	145
SEP	165	165	0.7	0.7	106	0	0	0	0	11	0	0.7081	117
OCT	235	235	0.8	0.8	151	0	0	0	0	11	0	0.6887	162
NOV	408	408	1.1	1.1	261	0	0	0	0	11	0	0.6666	272
DEC	584	584	1.2	1.2	348	0	0	0	0	11	0	0.6146	359
TOTAL	4186	4186	1.5		2588	0	0	0	0	129		0.6491	2717

Bar/Lounge — System 2

S D L P R O C E S S O R I N P U T D A T A

Thu Nov 11 09:03:47 1993SDL RUN 2

```
* 137 *
* 138 * TITLE  LINE-3 * NEW FEATURES IN DOE2.1E RUN 2 *
* 139 *        LINE-4 * SYSTEM 2: PKG ROOFTOP PSZ AC UNIT *
* 140 *        LINE-5 * DESICCANT COOLING OF MIN OA * ..
* 141 *
* 142 * SYSTEMS-REPORT   S (SS-A,SS-J,SS-I,SS-N,SS-O)  ..
* 143 *
* 144 * FANSON  SCH THRU DEC 31 (MON,SAT) (1,24) (1)
* 145 *                         (SUN,HOL) (1,2) (1) (3,9)(0) (10,24)(1)  ..
* 146 * C-SETPT SCH THRU DEC 31 (ALL) (1,24) (76)  ..
* 147 * H-SETPT SCH THRU DEC 31 (ALL) (1,24) (72)  ..
* 148 * ENV  Z-C  D-H-T 72  D-C-T 74  H-T-SCH H-SETPT  C-T-SCH C-SETPT    ..
* 149 *
* 150 * BLDG Z  Z-C ENV  O-CFM/P 20  CFM/SQFT .7  ..
* 151 *
* 152 * SYS1  SYSTEM  S-TYPE PSZ          DRYBULB-LIMIT=60
* 153 *               SUPPLY-CFM=2500     HEATING-CAPACITY=-120000
* 154 *               MAX-SUPPLY-T =100   MIN-SUPPLY-T=55
* 155 *               SUPPLY-STATIC=2.5   SUPPLY-EFF=.47
* 156 *               DESICCANT=LIQ-VENT-AIR-1
* 157 *               DESC-DEW-SET=45     DESC-CTRL-MODE = 1
* 158 *               DESICCANT-AIR=.29   REG-HEAT-SOURCE=GAS-HYDRONIC
* 159 *               F-SCH=FANSON        ZONE-NAMES (BLDG)   ..
* 160 *
* 161 *
* 162 * PLANT1 = PLANT-ASSIGNMENT  SYSTEM-NAMES = (SYS1)
* 163 *                            DHW-GAL/MIN  = .666
* 164 *                            DHW-SCH      = DOMHW  ..
* 165 *
* 166 * D1 = D-SCH (1,7) (0)  (8,21) (.1,.2,.3,.4,.55,.6,.6,.45,.4,.45,.45,.4,.3,.3)
* 167 *                      (22,24) (0)  ..
* 168 * D2 = D-SCH (1,7) (0)  (8,22) (.15,.2,.25,.4,.5,.55,.55,.45,.45,.45,.45,.4,.35,
* 169 *                              .25,.2)  (23,24) (0)  ..
* 170 * D3 = D-SCH (1,9) (0)  (10,19) (.1,.25,.3,.35,.35,.3,.3,.35,.3,.2)
* 171 *                      (20,24) (0)  ..
* 172 * DOMHW = SCH THRU DEC 31 (WD) D1  (SAT) D2  (SUN,HOL) D3  ..
* 173 * END ..
* 174 * COMPUTE SYSTEMS  ..
* 175 * INPUT PLANT  ..
```

P D L P R O C E S S O R I N P U T D A T A

Thu Nov 11 09:03:47 1993PDL RUN 2

```
* 176 * PLANT1 = PLANT-ASSIGNMENT  ..
* 177 * PLANT-REPORT   S (BEPS)  ..
* 178 * END  ..
* 179 * COMPUTE PLANT  ..
* 180 * INPUT ECONOMICS  ..
```

```
* 181 *
* 182 * ECONOMICS-REPORT  S (ES-D,ES-E)  ..
* 183 *
* 184 * ELEC-COST = UTILITY-RATE  RESOURCE = ELECTRICITY
* 185 *                          MONTH-CHGS = (21.75)
* 186 *                          DEMAND-CHGS = (.81)
* 187 *                          BLOCK-CHARGES = (E-SM,E-WN)  ..
* 188 *
* 189 * E-SM      = BLOCK-CHARGE  BLOCK-SCH   = SEASON
* 190 *                          SCH-FLAG    = 2
* 191 *                          BLOCK1-TYPE = ENERGY
* 192 *                          BLOCK1-DATA = (1250,.0829)
* 193 *                          BLOCK2-TYPE = KWH/KW
* 194 *                          BLOCK2-DATA = (125,.0829,0
* 195 *                                            1,.0514,0)  ..
* 196 *
* 197 * E-WN      = BLOCK-CHARGE  BLOCK-SCH   = SEASON
* 198 *                          SCH-FLAG    = 1
* 199 *                          BLOCK1-TYPE = ENERGY
* 200 *                          BLOCK1-DATA = (1250,.0778)
* 201 *                          BLOCK2-TYPE = KWH/KW
* 202 *                          BLOCK2-DATA = (125,.0778,0
* 203 *                                            1,.0514,0)  ..
* 204 *
* 205 * SEASON    = SCHEDULE THRU APR 30 (ALL) (1,24)(1)
* 206 *                      THRU OCT 31 (ALL) (1,24)(2)
* 207 *                      THRU DEC 31 (ALL) (1,24)(1)  ..
* 208 *
* 209 * GAS-COST  = UTILITY-RATE  RESOURCE = NATURAL-GAS
* 210 *                          MONTH-CHGS = (10.73)
* 211 *                          BLOCK-CHARGES = (GAS-CH)  ..
* 212 *
* 213 * GAS-CH    = BLOCK-CHARGE  BLOCK1-TYPE = ENERGY
* 214 *                          BLOCK1-DATA = (400,.643
* 215 *                                            1,.4943)  ..
* 216 *
* 217 * END  ..
* 218 * COMPUTE ECONOMICS  ..
* 219 * INPUT SYSTEMS  ..
```

SMALL BAR/LOUGE
NEW FEATURES IN DOE2.1E RUN 2
REPORT- SV-A SYSTEM DESIGN PARAMETERS

DEMO DESICCANT & EVAPORATIVE COOLING
SYSTEM 2: PKG ROOFTOP PSZ AC UNIT
SYS1

DOE-2.1E-001 Thu Nov 11 09:03:47 1993SDL RUN 2
DESICCANT COOLING OF MIN OA
WEATHER FILE- TRY CHICAGO

SYSTEM NAME	SYSTEM TYPE	ALTITUDE MULTIPLIER	FLOOR AREA (SQFT)	MAX PEOPLE
SYS1	PSZ	1.020	2160.0	48.

SUPPLY FAN (CFM)	ELEC (KW)	DELTA-T (F)	RETURN FAN (CFM)	ELEC (KW)	DELTA-T (F)	OUTSIDE AIR RATIO	COOLING CAPACITY (KBTU/HR)	SENSIBLE (SHR)	HEATING CAPACITY (KBTU/HR)	COOLING EIR (BTU/BTU)	HEATING EIR (BTU/BTU)
2550.	1.561	1.9	0.	0.000	0.0	0.384	116.904	0.639	-120.000	0.36	0.37

ZONE NAME	SUPPLY FLOW (CFM)	EXHAUST FLOW (CFM)	FAN (KW)	MINIMUM FLOW RATIO	OUTSIDE AIR FLOW (CFM)	COOLING CAPACITY (KBTU/HR)	SENSIBLE (SHR)	EXTRACTION RATE (KBTU/HR)	HEATING CAPACITY (KBTU/HR)	ADDITION RATE (KBTU/HR)	MULTIPLIER
BLDG	2550.	0.	0.000	1.000	979.	0.00	0.00	52.33	0.00	-45.22	1.0

SMALL BAR/LOUGE DEMO DESICCANT & EVAPORATIVE COOLING DOE-2.1E-001 Thu Nov 11 09:03:47 1993SDL RUN 2
NEW FEATURES IN DOE2.1E RUN 2 SYSTEM 2: PKG ROOFTOP PSZ AC UNIT DESICCANT COOLING OF MIN OA
REPORT- SS-P LOAD, ENERGY AND PART LOAD DHW TANK OPERATION FOR PLANT1 WEATHER FILE- TRY CHICAGO

TANK SIZE is 30.0 (GAL) HEATER CAP = 25.774 (KBTU/HR) FLOW RATE = 0.666 (GAL/MIN) PUMP = 0.000 (KW)

MONTH	SUM PEAK	UNIT LOAD (MBTU) (KBTU/HR)	ENERGY USE (MBTU) (KBTU/HR)	RCV EN USE (MBTU) (KBTU/HR)	PUMP ENERGY (KWH) (KW)	Number of hours within each PART LOAD range 00 10	10 20	20 30	30 40	40 50	50 60	60 70	70 80	80 90	90 100	100 +	TOTAL RUN HOURS
JAN	SUM	5.160	8.354	0.000	0.000	329	26	41	16	107	70	85	30	40	0	0	744
	PEAK	19.998	28.991	0.000	0.000												
	DAY/HR	29/14	29/14	31/24	31/24												
FEB	SUM	4.837	7.807	0.000	0.000	296	24	36	13	96	65	77	27	38	0	0	672
	PEAK	20.598	29.837	0.000	0.000												
	DAY/HR	26/14	26/14	28/24	28/24												
MAR	SUM	5.390	8.675	0.000	0.000	322	27	39	12	101	77	89	31	46	0	0	744
	PEAK	20.198	29.273	0.000	0.000												
	DAY/HR	31/14	31/14	31/24	31/24												
APR	SUM	4.947	7.993	0.000	0.000	312	26	38	12	98	156	4	74	0	0	0	720
	PEAK	19.198	27.862	0.000	0.000												
	DAY/HR	30/14	30/14	30/ 1	30/ 1												
MAY	SUM	4.592	7.499	0.000	0.000	329	31	36	100	93	80	35	40	0	0	0	744
	PEAK	17.799	25.886	0.000	0.000												
	DAY/HR	28/14	28/14	31/ 1	31/ 1												
JUN	SUM	4.225	6.909	0.000	0.000	312	30	46	98	74	86	74	0	0	0	0	720
	PEAK	16.399	23.911	0.000	0.000												
	DAY/HR	30/14	30/14	30/ 1	30/ 1												
JUL	SUM	3.990	6.582	0.000	0.000	325	31	51	103	156	36	42	0	0	0	0	744
	PEAK	15.199	22.218	0.000	0.000												
	DAY/HR	30/14	30/14	31/ 1	31/ 1												
AUG	SUM	3.882	6.420	0.000	0.000	326	31	48	105	156	78	0	0	0	0	0	744
	PEAK	14.799	21.654	0.000	0.000												
	DAY/HR	31/14	31/14	31/ 1	31/ 1												
SEP	SUM	3.848	6.351	0.000	0.000	316	30	47	102	150	33	42	0	0	0	0	720
	PEAK	15.199	22.218	0.000	0.000												
	DAY/HR	30/14	30/14	30/ 1	30/ 1												
OCT	SUM	4.179	6.877	0.000	0.000	329	31	52	107	150	35	40	0	0	0	0	744
	PEAK	16.199	23.629	0.000	0.000												
	DAY/HR	29/14	29/14	31/24	31/24												
NOV	SUM	4.376	7.158	0.000	0.000	320	30	34	98	90	80	28	40	0	0	0	720
	PEAK	17.599	25.604	0.000	0.000												
	DAY/HR	30/14	30/14	30/24	30/24												
DEC	SUM	4.898	7.961	0.000	0.000	330	27	39	101	22	150	4	71	0	0	0	744
	PEAK	18.998	27.580	0.000	0.000												
	DAY/HR	30/14	30/14	31/24	31/24												
YR	SUM	54.324	88.587	0.000	0.000	3846	344	507	867	1293	946	520	313	124	0	0	8760
	PEAK	20.598	29.837	0.000	0.000												
	MON/DAY	2/26	2/26	12/31	12/31												

	COOLING						HEATING						ELEC	
MONTH	COOLING ENERGY (MBTU)	TIME OF MAX DY	TIME OF MAX HR	DRY-BULB TEMP	WET-BULB TEMP	MAXIMUM COOLING LOAD (KBTU/HR)	HEATING ENERGY (MBTU)	TIME OF MAX DY	TIME OF MAX HR	DRY-BULB TEMP	WET-BULB TEMP	MAXIMUM HEATING LOAD (KBTU/HR)	ELEC-TRICAL ENERGY (KWH)	MAXIMUM ELEC LOAD (KW)
JAN	0.00000					0.000	-47.991	12	4	-2.F	-3.F	-121.226	2441.	4.980
FEB	0.00000					0.000	-41.015	8	6	5.F	4.F	-114.770	2208.	4.980
MAR	0.05082	3	15	76.F	65.F	14.347	-31.583	24	6	8.F	7.F	-111.923	2487.	5.518
APR	1.01274	28	15	78.F	68.F	32.255	-15.106	9	6	26.F	25.F	-75.362	2586.	8.214
MAY	2.66587	21	13	87.F	76.F	74.001	-7.767	7	6	33.F	29.F	-61.595	2814.	11.256
JUN	8.79381	20	18	91.F	78.F	93.640	-2.232	1	6	48.F	47.F	-30.591	3534.	15.643
JUL	21.95020	13	17	97.F	78.F	86.927	-0.350	6	6	61.F	55.F	-14.631	5070.	14.872
AUG	16.24917	26	18	93.F	75.F	72.370	-0.586	5	6	55.F	54.F	-17.116	4421.	12.881
SEP	3.91798	11	17	86.F	72.F	59.689	-5.825	23	6	36.F	33.F	-57.178	2936.	11.036
OCT	0.77089	30	19	73.F	67.F	29.478	-12.626	21	6	30.F	29.F	-69.521	2624.	8.454
NOV	0.32590	2	13	74.F	61.F	27.770	-26.657	14	10	29.F	28.F	-86.688	2398.	6.606
DEC	0.00000					0.000	-41.597	9	6	14.F	13.F	-101.200	2433.	4.980
TOTAL	55.737						-233.334						35952.	
MAX						93.640						-121.226		15.643

SMALL BAR/LOUGE DEMO DESICCANT & EVAPORATIVE COOLING DOE-2.1E-001 Thu Nov 11 09:03:47 1993SDL RUN 2
NEW FEATURES IN DOE2.1E RUN 2 SYSTEM 2: PKG ROOFTOP PSZ AC UNIT DESICCANT COOLING OF MIN OA
REPORT- SS-I SYSTEM MONTHLY SENSIBLE LATENT SUMMARY FOR SYS1 WEATHER FILE- TRY CHICAGO

MONTH	SENSIBLE COOLING ENERGY (MBTU)	LATENT COOLING ENERGY (MBTU)	MAX TOTAL COOLING ENERGY (KBTU/HR)	SENSIBLE HEAT RATIO AT MAX	TIME OF MAX DY	TIME OF MAX HR	SENSIBLE HEATING ENERGY (MBTU)	LATENT HEATING ENERGY (MBTU)	MAX TOTAL HEATING ENERGY (KBTU/HR)
JAN	0.00000	0.00000	0.000				-47.99058	0.00000	-121.22570
FEB	0.00000	0.00000	0.000				-41.01462	0.00000	-114.77034
MAR	0.04704	0.00378	14.347	0.919	3	15	-31.58274	0.00000	-111.923
APR	0.91411	0.09863	32.255	0.913	28	15	-15.10616	0.00000	-75.362
MAY	2.30483	0.36104	74.001	0.787	21	13	-7.76678	0.00000	-61.595
JUN	7.79127	1.00253	93.640	0.755	20	18	-2.23162	0.00000	-30.591
JUL	19.30195	2.64825	86.927	0.801	13	17	-0.34957	0.00000	-14.631
AUG	14.34881	1.90036	72.370	0.813	26	18	-0.58622	0.00000	-17.116
SEP	3.47811	0.43986	59.689	0.870	11	17	-5.82491	0.00000	-57.178
OCT	0.67051	0.10038	29.478	0.819	30	19	-12.62613	0.00000	-69.521
NOV	0.30953	0.01637	27.770	0.928	2	13	-26.65744	0.00000	-86.688
DEC	0.00000	0.00000	0.000				-41.59677	0.00000	-101.20022
TOTAL	49.166	6.571					-233.334	0.000	
MAX			93.640	0.755					-121.226

	-----COOLING-----				---HEATING---			DAY COOLING PEAK			
	JUN 20				JAN 12			JUL 14			
HOUR	HOURLY COOLING LOAD (KBTU)	SENSIBLE HEAT RATIO	DRY-BULB TEMP	WET-BULB TEMP	HOURLY HEATING LOAD (KBTU)	DRY-BULB TEMP	WET-BULB TEMP	HOURLY COOLING LOAD (KBTU)	SENSIBLE HEAT RATIO	DRY-BULB TEMP	WET-BULB TEMP
1	15.209	0.869	68.F	64.F	-107.961	5.F	4.F	43.987	0.873	83.F	72.F
2	0.000	0.000	68.F	64.F	-112.781	3.F	2.F	36.373	0.879	81.F	72.F
3	0.000	0.000	66.F	62.F	-120.168	1.F	0.F	31.874	0.893	80.F	71.F
4	0.000	0.000	66.F	62.F	-121.226	-2.F	-3.F	29.731	0.882	78.F	71.F
5	0.000	0.000	65.F	62.F	-121.125	-4.F	-5.F	25.271	0.887	77.F	70.F
6	0.000	0.000	65.F	62.F	-120.862	-5.F	-6.F	36.054	0.840	78.F	71.F
7	0.000	0.000	67.F	64.F	-120.203	-6.F	-7.F	39.829	0.847	79.F	71.F
8	0.000	0.000	73.F	65.F	-120.577	-7.F	-7.F	45.173	0.865	82.F	72.F
9	22.093	0.946	76.F	67.F	-118.961	-8.F	-8.F	54.919	0.844	86.F	74.F
10	44.616	0.868	80.F	71.F	-116.338	-7.F	-7.F	58.808	0.858	88.F	74.F
11	56.471	0.862	83.F	72.F	-104.770	-4.F	-5.F	70.498	0.826	91.F	76.F
12	68.240	0.828	84.F	74.F	-89.410	0.F	0.F	79.721	0.817	94.F	76.F
13	69.922	0.833	85.F	74.F	-77.366	4.F	2.F	75.991	0.847	96.F	77.F
14	77.760	0.822	88.F	75.F	-74.479	6.F	4.F	66.073	0.875	87.F	74.F
15	88.683	0.785	90.F	77.F	-75.663	4.F	2.F	53.496	0.896	76.F	71.F
16	90.463	0.763	90.F	78.F	-80.911	3.F	1.F	60.736	0.839	78.F	72.F
17	93.640	0.755	91.F	78.F	-91.464	1.F	0.F	60.330	0.817	78.F	72.F
18	87.033	0.769	90.F	77.F	-101.802	-2.F	-3.F	69.155	0.818	89.F	75.F
19	80.527	0.753	89.F	78.F	-99.693	-4.F	-5.F	67.523	0.814	87.F	75.F
20	62.136	0.781	79.F	74.F	-106.646	-4.F	-5.F	65.174	0.807	84.F	74.F
21	36.452	0.846	70.F	67.F	-105.348	-3.F	-4.F	64.599	0.798	84.F	74.F
22	30.215	0.839	69.F	66.F	-103.151	-3.F	-4.F	62.962	0.788	82.F	74.F
23	25.895	0.846	70.F	65.F	-102.972	-2.F	-3.F	53.098	0.828	80.F	72.F
24	19.546	0.886	71.F	64.F	-104.326	-1.F	-2.F	42.011	0.848	78.F	72.F
	---				---			---			
SUM								1293.387			
MAX	93.640				-121.226						

SYSTEM-TYPE	PSZ	SQFT/TON	276.8
COOLING PEAK	43.35 (BTU/HR- SQFT)	HEATING PEAK	-56.12 (BTU/HR- SQFT)
SUPPLY AIR PEAK FLOW	1.18 (CFM/SQFT)	MIN-OA/PERSON	20.40 (CFM)
OA FRAC AT CLG PEAK	0.384	OA FRAC AT HTG PEAK	0.384

* ASTERISKS INDICATE HOURS LOADS NOT MET

TOTAL HOURS AT RELATIVE HUMIDITY LEVEL AND TIME OF DAY

HOUR	1AM	2	3	4	5	6	7	8	9	10	11	12	1PM	2	3	4	5	6	7	8	9	10	11	12	TOTAL
80-100	0	0	0	0	0	0	0	0	0	0	0	0	0	0	0	0	0	0	0	0	0	0	0	0	0
70-80	0	0	0	0	0	0	0	0	0	0	0	0	0	0	0	0	0	0	0	0	1	0	0	0	1
60-70	1	0	0	0	1	4	3	0	0	1	0	0	0	0	0	0	1	3	2	3	1	2	2	3	27
50-60	7	9	6	10	13	23	23	9	7	3	5	11	3	2	1	6	12	7	10	10	14	26	14	9	240
40-50	131	57	59	61	67	93	97	98	105	100	109	151	66	53	54	148	168	164	152	159	169	156	157	118	2692
30-40	59	94	84	77	64	37	52	62	77	94	93	65	158	152	158	69	71	84	78	80	87	93	92	101	2081
0-30	167	171	154	155	158	146	128	134	148	167	158	138	138	158	152	142	113	107	123	113	93	88	100	134	3285

MONTH	TOTAL COOLING ENERGY (MBTU)	SENSIBLE COOLING ENERGY (MBTU)	LATENT COOLING ENERGY (MBTU)	HOURS ON	ELECTRIC ENERGY (KWH)	GAS OIL ENERGY (MBTU)
JAN	0.00000	0.00000	0.00000	0	0.	0.00000
FEB	0.00000	0.00000	0.00000	0	0.	0.00000
MAR	0.44183	0.12643	0.31541	29	17.	1.15190
APR	2.96209	1.60152	1.36056	204	116.	6.79351
MAY	3.90973	0.96668	2.94304	249	144.	9.95194
JUN	8.92682	2.58435	6.34247	533	307.	20.52970
JUL	13.88187	0.88956	12.99232	705	411.	31.03108
AUG	12.53177	0.90114	11.63064	671	391.	29.44838
SEP	5.70114	2.40156	3.29958	360	205.	12.66627
OCT	3.29700	1.76097	1.53603	226	128.	7.46790
NOV	0.52543	0.22485	0.30058	34	19.	1.22540
DEC	0.00000	0.00000	0.00000	0	0.	0.00000
TOTAL	52.17781	11.45708	40.72067	3011	1739.	120.26609

	UNIT RUN TIME (HOURS)	TOTAL LOAD ON UNIT (MBTU)	ENERGY IN TO UNIT (MBTU)	AUXILIARY ENERGY (MBTU)	SUP UNIT LOAD (MBTU)	SUP UNIT ENERGY (MBTU)	WASTE HEAT GENERATED (MBTU)	WASTE HEAT USE (MBTU)		INDOOR FAN ENERGY (MBTU)
JAN	0.	0.000	0.000	0.126	0.000	0.000	0.000	0.000	0.000	0.000
FEB	0.	0.000	0.000	0.114	0.000	0.000	0.000	0.000	0.000	0.000
MAR	2.	0.051	0.018	0.113	0.000	0.000	0.000	0.000	0.000	0.040
APR	20.	1.013	0.346	0.058	0.000	0.000	0.000	0.000	0.000	0.554
MAY	40.	2.666	0.878	0.030	0.000	0.000	0.000	0.000	0.000	1.095
JUN	114.	8.794	2.986	0.001	0.000	0.000	0.000	0.000	0.000	2.272
JUL	217.	21.950	7.634	0.000	0.000	0.000	0.000	0.000	0.000	3.337
AUG	174.	16.249	5.518	0.000	0.000	0.000	0.000	0.000	0.000	3.111
SEP	57.	3.918	1.339	0.016	0.000	0.000	0.000	0.000	0.000	1.273
OCT	18.	0.771	0.261	0.052	0.000	0.000	0.000	0.000	0.000	0.551
NOV	8.	0.326	0.109	0.104	0.000	0.000	0.000	0.000	0.000	0.240
DEC	0.	0.000	0.000	0.127	0.000	0.000	0.000	0.000	0.000	0.000
ANNUAL	649.	55.737	19.090	0.741	0.000	0.000	0.000	0.000	0.000	12.473

CSPF (WITH PARASITICS) = 1.73 (BTU/BTU)

CSPF (WITHOUT PARASITICS) = 2.92 (BTU/BTU)

	UNIT RUN TIME (HOURS)	TOTAL LOAD ON UNIT (MBTU)	ENERGY IN TO UNIT (MBTU)	AUXILIARY ENERGY (MBTU)	SUP UNIT LOAD (MBTU)	SUP UNIT ENERGY (MBTU)	WASTE HEAT GENERATED (MBTU)	WASTE HEAT USE (MBTU)	DEFROST LOAD (MBTU)	INDOOR FAN ENERGY (MBTU)
JAN	400.	-47.991	68.272	0.275	0.000	0.000	0.000	0.000	0.000	3.740
FEB	342.	-41.015	58.748	0.264	0.000	0.000	0.000	0.000	0.000	3.393
MAR	263.	-31.583	46.600	0.385	0.000	0.000	0.000	0.000	0.000	3.774
APR	126.	-15.106	23.259	0.475	0.000	0.000	0.000	0.000	0.000	3.132
MAY	65.	-7.767	12.535	0.543	0.000	0.000	0.000	0.000	0.000	2.645
JUN	19.	-2.232	3.982	0.561	0.000	0.000	0.000	0.000	0.000	1.414
JUL	3.	-0.350	0.736	0.593	0.000	0.000	0.000	0.000	0.000	0.439
AUG	5.	-0.586	1.189	0.591	0.000	0.000	0.000	0.000	0.000	0.666
SEP	49.	-5.825	9.678	0.537	0.000	0.000	0.000	0.000	0.000	2.376
OCT	105.	-12.626	19.817	0.511	0.000	0.000	0.000	0.000	0.000	3.188
NOV	222.	-26.657	39.537	0.398	0.000	0.000	0.000	0.000	0.000	3.372
DEC	347.	-41.597	60.247	0.318	0.000	0.000	0.000	0.000	0.000	3.740
ANNUAL	1944.	-233.334	344.601	5.452	0.000	0.000	0.000	0.000	0.000	31.879

HSPF (WITH PARASITICS) = 0.69 (BTU/BTU)

HSPF (WITHOUT PARASITICS) = 0.68 (BTU/BTU)

TOTAL HOURS AT TEMPERATURE LEVEL AND TIME OF DAY

HOUR	1AM	2	3	4	5	6	7	8	9	10	11	12	1PM	2	3	4	5	6	7	8	9	10	11	12	TOTAL
ABOVE 85	0	0	0	0	0	0	0	0	0	0	0	0	0	0	0	0	0	0	0	0	0	0	0	0	0
80-85	0	0	0	0	0	0	0	0	0	0	0	0	0	0	0	0	0	0	0	0	0	0	0	0	0
75-80	81	52	40	36	32	37	41	58	88	102	124	145	155	162	166	163	161	159	153	137	133	124	120	95	2564
70-75	284	279	263	266	270	265	261	244	248	261	239	220	210	203	199	202	204	206	212	228	232	241	245	270	5752
65-70	0	0	0	1	1	1	1	1	1	2	2	0	0	0	0	0	0	0	0	0	0	0	0	0	10
60-65	0	0	0	0	0	0	0	0	0	0	0	0	0	0	0	0	0	0	0	0	0	0	0	0	0
BELOW 60	0	0	0	0	0	0	0	0	0	0	0	0	0	0	0	0	0	0	0	0	0	0	0	0	0

MONTH	BTU/UNIT:	ELECTRICITY METER-1 3413./KWH	NATURAL-GAS METER-1 100000./THERM
JAN			
ENERGY CONSUMPTION (UNITS/MO)		2441.4	769.0
PEAK DEMAND (UNITS/HR OR DAY)		5.0	1.7
	PEAK DAY/HR	1/18	12/10
FEB			
ENERGY CONSUMPTION (UNITS/MO)		2208.0	668.2
PEAK DEMAND (UNITS/HR OR DAY)		5.0	1.6
	PEAK DAY/HR	1/19	4/ 9
MAR			
ENERGY CONSUMPTION (UNITS/MO)		2486.5	568.1
PEAK DEMAND (UNITS/HR OR DAY)		5.5	1.6
	PEAK DAY/HR	2/22	24/ 8
APR			
ENERGY CONSUMPTION (UNITS/MO)		2586.2	385.2
PEAK DEMAND (UNITS/HR OR DAY)		8.2	1.1
	PEAK DAY/HR	27/19	9/ 6
MAY			
ENERGY CONSUMPTION (UNITS/MO)		2814.4	305.3
PEAK DEMAND (UNITS/HR OR DAY)		11.3	0.9
	PEAK DAY/HR	21/13	7/ 6
JUN			
ENERGY CONSUMPTION (UNITS/MO)		3533.7	319.8
PEAK DEMAND (UNITS/HR OR DAY)		15.6	0.8
	PEAK DAY/HR	20/18	9/13
JUL			
ENERGY CONSUMPTION (UNITS/MO)		5070.3	389.4
PEAK DEMAND (UNITS/HR OR DAY)		14.9	0.8
	PEAK DAY/HR	13/19	2/12
AUG			
ENERGY CONSUMPTION (UNITS/MO)		4421.3	376.5
PEAK DEMAND (UNITS/HR OR DAY)		12.9	0.8
	PEAK DAY/HR	15/18	11/13
SEP			
ENERGY CONSUMPTION (UNITS/MO)		2936.1	292.3
PEAK DEMAND (UNITS/HR OR DAY)		11.0	0.9
	PEAK DAY/HR	11/17	23/ 6
OCT			
ENERGY CONSUMPTION (UNITS/MO)		2624.5	346.7
PEAK DEMAND (UNITS/HR OR DAY)		8.5	1.0
	PEAK DAY/HR	30/19	2/ 8
NOV			
ENERGY CONSUMPTION (UNITS/MO)		2397.6	483.2
PEAK DEMAND (UNITS/HR OR DAY)		6.6	1.3
	PEAK DAY/HR	2/19	14/11
DEC			
ENERGY CONSUMPTION (UNITS/MO)		2432.5	685.3
PEAK DEMAND (UNITS/HR OR DAY)		5.0	1.4
	PEAK DAY/HR	1/19	26/10
TOTAL			
ENERGY CONSUMPTION (UNITS/YR)		35952.6	5589.1
PEAK DEMAND (UNITS/HR OR DAY)		15.6	1.7

ELECTRICAL LOADS	KWH SUPPLIED	PCT OF TOTAL LOAD
ELECTRICITY	35952.6	100.0
LOAD SATISFIED	35952.6	100.0
TOTAL LOAD ON PLANT	35953.1	

SUMMARY OF LOADS MET

TYPE OF LOAD	TOTAL LOAD (MBTU)	LOAD SATISFIED (MBTU)	TOTAL OVERLOAD (MBTU)	PEAK OVERLOAD (MBTU)	HOURS OVERLOADED
ELECTRICAL LOADS	122.7	122.7	0.000	0.000	0

ENERGY TYPE: UNITS: MBTU	ELECTRICITY	NATURAL-GAS
CATEGORY OF USE		
AREA LIGHTS	35.7	0.0
MISC EQUIPMT	16.9	0.0
SPACE HEAT	0.0	350.1
SPACE COOL	25.0	120.3
PUMPS & MISC	0.7	0.0
VENT FANS	44.3	0.0
DOMHOT WATER	0.0	88.6
TOTAL	122.7	558.9

TOTAL SITE ENERGY	681.61 MBTU	315.6 KBTU/SQFT-YR GROSS-AREA	315.6 KBTU/SQFT-YR NET-AREA
TOTAL SOURCE ENERGY	927.05 MBTU	429.2 KBTU/SQFT-YR GROSS-AREA	429.2 KBTU/SQFT-YR NET-AREA

PERCENT OF HOURS ANY SYSTEM ZONE OUTSIDE OF THROTTLING RANGE = 0.1
PERCENT OF HOURS ANY PLANT LOAD NOT SATISFIED = 0.0

NOTE: ENERGY IS APPORTIONED HOURLY TO ALL END-USE CATEGORIES.

SMALL BAR/LOUGE
NEW FEATURES IN DOE2.1E RUN 2
REPORT- ES-D ENERGY COST SUMMARY

DEMO DESICCANT & EVAPORATIVE COOLING
SYSTEM 2: PKG ROOFTOP PSZ AC UNIT

DOE-2.1E-001 Thu Nov 11 09:03:47 1993EDL RUN 2
DESICCANT COOLING OF MIN OA

UTILITY-RATE	RESOURCE	METERS	METERED ENERGY UNITS/YR	TOTAL CHARGE ($)	VIRTUAL RATE ($/UNIT)	RATE USED ALL YEAR?
ELEC-COST	ELECTRICITY	1 2 3 4 5	35953. KWH	3040.	0.0846	YES
GAS-COST	NATURAL-GAS	1 2 3 4 5	5589. THERM	3548.	0.6348	YES
				==========		
				6588.		

ENERGY COST/GROSS BLDG AREA: 3.05
ENERGY COST/NET BLDG AREA: 3.05

SMALL BAR/LOUGE DEMO DESICCANT & EVAPORATIVE COOLING DOE-2.1E-001 Thu Nov 11 09:03:47 1993EDL RUN 2
NEW FEATURES IN DOE2.1E RUN 2 SYSTEM 2: PKG ROOFTOP PSZ AC UNIT DESICCANT COOLING OF MIN OA
REPORT- ES-E SUMMARY OF UTILITY-RATE: ELEC-COST

UTILITY-RATE: ELEC-COST
RESOURCE: ELECTRICITY
METERS: 1 2 3 4 5
POWER-FACTOR: 0.80
DEMAND-WINDOW: HOUR
BILLING-DAY: 31
EXCESS-KVAR-FRAC: 0.30
3413. BTU/KWH
RATE-LIMITATION: 0.0000
EXCESS-KVAR-CHG: 0.0000

RATE-QUALIFICATIONS

MIN-ENERGY:	0.0
MAX-ENERGY:	0.0
MIN-DEMAND:	0.0
MAX-DEMAND:	0.0
QUALIFY-RATE:	ALL-MONTHS
USE-MIN-QUAL:	NO

BLOCK-CHARGES
E-SM
E-WN

DEMAND-RATCHETS

MIN-MON-RATCHETS

MONTH	METERED ENERGY KWH	BILLING ENERGY KWH	METERED DEMAND KW	BILLING DEMAND KW	ENERGY CHARGE ($)	DEMAND CHARGE ($)	ENERGY CST ADJ ($)	TAXES ($)	SURCHRG ($)	FIXED CHARGE ($)	MINIMUM CHARGE ($)	VIRTUAL RATE ($/UNIT)	TOTAL CHARGE ($)
JAN	2441	2441	5.0	5.0	175	4	0	0	0	22	0	0.0822	201
FEB	2208	2208	5.0	5.0	163	4	0	0	0	22	0	0.0855	189
MAR	2487	2487	5.5	5.5	179	4	0	0	0	22	0	0.0825	205
APR	2586	2586	8.2	8.2	193	7	0	0	0	22	0	0.0856	221
MAY	2814	2814	11.3	11.3	228	9	0	0	0	22	0	0.0921	259
JUN	3534	3534	15.6	15.6	283	13	0	0	0	22	0	0.0897	317
JUL	5070	5070	14.9	14.9	359	12	0	0	0	22	0	0.0774	392
AUG	4421	4421	12.9	12.9	317	10	0	0	0	22	0	0.0791	350
SEP	2936	2936	11.0	11.0	234	9	0	0	0	22	0	0.0901	264
OCT	2624	2624	8.5	8.5	208	7	0	0	0	22	0	0.0900	236
NOV	2398	2398	6.6	6.6	178	5	0	0	0	22	0	0.0856	205
DEC	2433	2433	5.0	5.0	174	4	0	0	0	22	0	0.0823	200
TOTAL	35953	35953	15.6		2691	89	0	0	0	261		0.0846	3040

SMALL BAR/LOUGE
NEW FEATURES IN DOE2.1E RUN 2
REPORT- ES-E SUMMARY OF UTILITY-RATE: GAS-COST

DEMO DESICCANT & EVAPORATIVE COOLING
SYSTEM 2: PKG ROOFTOP PSZ AC UNIT

DOE-2.1E-001 Thu Nov 11 09:03:47 1993EDL RUN 2
DESICCANT COOLING OF MIN OA

UTILITY-RATE: GAS-COST

RESOURCE: NATURAL-GAS
METERS: 1 2 3 4 5

DEMAND-WINDOW: HOUR
BILLING-DAY: 31

100000. BTU/THERM
RATE-LIMITATION: 0.0000

RATE-QUALIFICATIONS		BLOCK-CHARGES	DEMAND-RATCHETS	MIN-MON-RATCHETS
MIN-ENERGY:	0.0	GAS-CH		
MAX-ENERGY:	0.0			
MIN-DEMAND:	0.0			
MAX-DEMAND:	0.0			
QUALIFY-RATE:	ALL-MONTHS			
USE-MIN-QUAL:	NO			

MONTH	METERED ENERGY THERM	BILLING ENERGY THERM	METERED DEMAND THERMS	BILLING DEMAND THERMS	ENERGY CHARGE ($)	DEMAND CHARGE ($)	ENERGY CST ADJ ($)	TAXES ($)	SURCHRG ($)	FIXED CHARGE ($)	MINIMUM CHARGE ($)	VIRTUAL RATE ($/UNIT)	TOTAL CHARGE ($)
JAN	769	769	1.7	1.7	440	0	0	0	0	11	0	0.5856	450
FEB	668	668	1.6	1.6	390	0	0	0	0	11	0	0.5994	400
MAR	568	568	1.6	1.6	340	0	0	0	0	11	0	0.6179	351
APR	385	385	1.1	1.1	248	0	0	0	0	11	0	0.6709	258
MAY	305	305	0.9	0.9	196	0	0	0	0	11	0	0.6781	207
JUN	320	320	0.8	0.8	206	0	0	0	0	11	0	0.6766	216
JUL	389	389	0.8	0.8	250	0	0	0	0	11	0	0.6706	261
AUG	376	376	0.8	0.8	242	0	0	0	0	11	0	0.6715	253
SEP	292	292	0.9	0.9	188	0	0	0	0	11	0	0.6797	199
OCT	347	347	1.0	1.0	223	0	0	0	0	11	0	0.6739	234
NOV	483	483	1.3	1.3	298	0	0	0	0	11	0	0.6396	309
DEC	685	685	1.4	1.4	398	0	0	0	0	11	0	0.5968	409
TOTAL	5589	5589	1.7		3419	0	0	0	0	129		0.6348	3548

S D L P R O C E S S O R I N P U T D A T A

Thu Nov 11 09:03:47 1993SDL RUN 3

```
* 220 *
* 221 * TITLE  LINE-3 * NEW FEATURES IN DOE2.1E RUN 3 *
* 222 *        LINE-4 * SYSTEM 3: STAND-ALONE EVAP COOLER *
* 223 *        LINE-5 * 100% OUTSIDE AIR FOR SUMMER *  ..
* 224 *
* 225 * SYSTEMS-REPORT   S (SS-A,SS-J,SS-I,SS-N,SS-O)  ..
* 226 *
* 227 * FANSON  SCH THRU DEC 31 (MON,SAT) (1,24) (1)
* 228 *                          (SUN,HOL) (1,2) (1) (3,9)(0) (10,24)(1)  ..
* 229 * C-SETPT SCH THRU DEC 31 (ALL) (1,24) (76)  ..
* 230 * H-SETPT SCH THRU DEC 31 (ALL) (1,24) (72)  ..
* 231 * ENV  Z-C  D-H-T 72  D-C-T 74  H-T-SCH H-SETPT  C-T-SCH C-SETPT    ..
* 232 *
* 233 * BLDG Z  Z-C ENV  O-CFM/P 20  CFM/SQFT .7  ..
* 234 *
* 235 * SYS1  SYSTEM  S-TYPE=EVAP-COOL $ NOT A GOOD CHOICE FOR CHICAGO WEATHER
* 236 *               EVAP-CL-TYPE=INDIRECT-DIRECT
* 237 *               SUPPLY-CFM=3500  $ MUST BE SIZED BY THE USER
* 238 *               HEATING-CAPACITY=-120000  $ MUST BE SIZED BY USER
* 239 *               SUPPLY-STATIC=2.5  SUPPLY-EFF=.47
* 240 *               F-SCH=FANSON  Z-N=(BLDG)   ..
* 241 *
* 242 * PLANT1 = PLANT-ASSIGNMENT  SYSTEM-NAMES = (SYS1)
* 243 *                            DHW-GAL/HIN  = .666
* 244 *                            DHW-SCH      = DOMHW  ..
* 245 *
* 246 * D1 = D-SCH (1,7) (0)  (8,21) (.1,.2,.3,.4,.55,.6,.6,.45,.4,.45,.45,.4,.3,.3)
* 247 *                       (22,24) (0)  ..
* 248 * D2 = D-SCH (1,7) (0)  (8,22) (.15,.2,.25,.4,.5,.55,.55,.45,.45,.45,.45,.4,.35,
* 249 *                              .25,.2)  (23,24) (0)  ..
* 250 * D3 = D-SCH (1,9) (0)  (10,19) (.1,.25,.3,.35,.35,.3,.3,.35,.3,.2)
* 251 *                       (20,24) (0)  ..
* 252 * DOMHW = SCH THRU DEC 31 (WD) D1  (SAT) D2  (SUN,HOL) D3  ..
* 253 * END  ..
* 254 * COMPUTE SYSTEMS  ..
* 255 * INPUT PLANT  ..
```

P D L P R O C E S S O R I N P U T D A T A

Thu Nov 11 09:03:47 1993PDL RUN 3

```
* 256 * PLANT1 = PLANT-ASSIGNMENT  ..
* 257 * PLANT-REPORT   S (BEPS)  ..
* 258 * END  ..
* 259 * COMPUTE PLANT  ..
* 260 * INPUT ECONOMICS  ..
```

```
* 261 *
* 262 * ECONOMICS-REPORT  S (ES-D,ES-E)  ..
* 263 *
* 264 * ELEC-COST = UTILITY-RATE  RESOURCE = ELECTRICITY
* 265 *                          MONTH-CHGS = (21.75)
* 266 *                          DEMAND-CHGS = (.81)
* 267 *                          BLOCK-CHARGES = (E-SM,E-WN)  ..
* 268 *
* 269 * E-SM      = BLOCK-CHARGE  BLOCK-SCH   = SEASON
* 270 *                          SCH-FLAG    = 2
* 271 *                          BLOCK1-TYPE = ENERGY
* 272 *                          BLOCK1-DATA = (1250,.0829)
* 273 *                          BLOCK2-TYPE = KWH/KW
* 274 *                          BLOCK2-DATA = (125,.0829,0
* 275 *                                           1,.0514,0)  ..
* 276 *
* 277 * E-WN      = BLOCK-CHARGE  BLOCK-SCH   = SEASON
* 278 *                          SCH-FLAG    = 1
* 279 *                          BLOCK1-TYPE = ENERGY
* 280 *                          BLOCK1-DATA = (1250,.0778)
* 281 *                          BLOCK2-TYPE = KWH/KW
* 282 *                          BLOCK2-DATA = (125,.0778,0
* 283 *                                           1,.0514,0)  ..
* 284 *
* 285 * SEASON    = SCHEDULE THRU APR 30 (ALL) (1,24)(1)
* 286 *                    THRU OCT 31 (ALL) (1,24)(2)
* 287 *                    THRU DEC 31 (ALL) (1,24)(1)  ..
* 288 *
* 289 * GAS-COST  = UTILITY-RATE  RESOURCE = NATURAL-GAS
* 290 *                          MONTH-CHGS = (10.73)
* 291 *                          BLOCK-CHARGES = (GAS-CH)  ..
* 292 *
* 293 * GAS-CH    = BLOCK-CHARGE  BLOCK1-TYPE = ENERGY
* 294 *                          BLOCK1-DATA = (400,.643
* 295 *                                           1,.4943)  ..
* 296 * END  ..
* 297 * COMPUTE ECONOMICS  ..
* 298 * INPUT SYSTEMS  ..
```

SMALL BAR/LOUGE
NEW FEATURES IN DOE2.1E RUN 3
REPORT- SV-A SYSTEM DESIGN PARAMETERS

DEMO DESICCANT & EVAPORATIVE COOLING
SYSTEM 3: STAND-ALONE EVAP COOLER
SYS1

DOE-2.1E-001 Thu Nov 11 09:03:47 1993SDL RUN 3
100% OUTSIDE AIR FOR SUMMER
WEATHER FILE- TRY CHICAGO

SYSTEM NAME	SYSTEM TYPE	ALTITUDE MULTIPLIER	FLOOR AREA (SQFT)	MAX PEOPLE
SYS1	EVAP-COOL	1.020	2160.0	48.

SUPPLY FAN (CFM)	ELEC (KW)	DELTA-T (F)	RETURN FAN (CFM)	ELEC (KW)	DELTA-T (F)	OUTSIDE AIR RATIO	COOLING CAPACITY (KBTU/HR)	SENSIBLE (SHR)	HEATING CAPACITY (KBTU/HR)	COOLING EIR (BTU/BTU)	HEATING EIR (BTU/BTU)
3570.	2.185	1.9	0.	0.000	0.0	0.274	53.418	1.655	-120.000	0.00	0.37

ZONE NAME	SUPPLY FLOW (CFM)	EXHAUST FLOW (CFM)	FAN (KW)	MINIMUM FLOW RATIO	OUTSIDE AIR FLOW (CFM)	COOLING CAPACITY (KBTU/HR)	SENSIBLE (SHR)	EXTRACTION RATE (KBTU/HR)	HEATING CAPACITY (KBTU/HR)	ADDITION RATE (KBTU/HR)	MULTIPLIER
BLDG	3570.	0.	0.000	1.000	979.	0.00	0.00	7.43	0.00	-46.62	1.0

SMALL BAR/LOUGE DEMO DESICCANT & EVAPORATIVE COOLING DOE-2.1E-001 Thu Nov 11 09:03:47 1993SDL RUN 3
NEW FEATURES IN DOE2.1E RUN 3 SYSTEM 3: STAND-ALONE EVAP COOLER 100% OUTSIDE AIR FOR SUMMER
REPORT- SS-P LOAD, ENERGY AND PART LOAD DHW TANK OPERATION FOR PLANT1 WEATHER FILE- TRY CHICAGO

TANK SIZE is 30.0 (GAL) HEATER CAP = 25.774 (KBTU/HR) FLOW RATE = 0.666 (GAL/MIN) PUMP = 0.000 (KW)

MONTH		UNIT LOAD (MBTU) (KBTU/HR)	ENERGY USE (MBTU) (KBTU/HR)	RCV EN USE (MBTU) (KBTU/HR)	PUMP ENERGY (KWH) (KW)	Number of hours within each PART LOAD range 00-10	10-20	20-30	30-40	40-50	50-60	60-70	70-80	80-90	90-100	100+	TOTAL RUN HOURS
JAN	SUM	5.160	8.354	0.000	0.000	329	26	41	16	107	70	85	30	40	0	0	744
	PEAK	19.998	28.991	0.000	0.000												
	DAY/HR	29/14	29/14	31/24	31/24												
FEB	SUM	4.837	7.807	0.000	0.000	296	24	36	13	96	65	77	27	38	0	0	672
	PEAK	20.598	29.837	0.000	0.000												
	DAY/HR	26/14	26/14	28/24	28/24												
MAR	SUM	5.390	8.675	0.000	0.000	322	27	39	12	101	77	89	31	46	0	0	744
	PEAK	20.198	29.273	0.000	0.000												
	DAY/HR	31/14	31/14	31/24	31/24												
APR	SUM	4.947	7.993	0.000	0.000	312	26	38	12	98	156	4	74	0	0	0	720
	PEAK	19.198	27.862	0.000	0.000												
	DAY/HR	30/14	30/14	30/ 1	30/ 1												
MAY	SUM	4.592	7.499	0.000	0.000	329	31	36	100	93	80	35	40	0	0	0	744
	PEAK	17.799	25.886	0.000	0.000												
	DAY/HR	28/14	28/14	31/ 1	31/ 1												
JUN	SUM	4.225	6.909	0.000	0.000	312	30	46	98	74	86	74	0	0	0	0	720
	PEAK	16.399	23.911	0.000	0.000												
	DAY/HR	30/14	30/14	30/ 1	30/ 1												
JUL	SUM	3.990	6.582	0.000	0.000	325	31	51	103	156	36	42	0	0	0	0	744
	PEAK	15.199	22.218	0.000	0.000												
	DAY/HR	30/14	30/14	31/ 1	31/ 1												
AUG	SUM	3.882	6.420	0.000	0.000	326	31	48	105	156	78	0	0	0	0	0	744
	PEAK	14.799	21.654	0.000	0.000												
	DAY/HR	31/14	31/14	31/ 1	31/ 1												
SEP	SUM	3.848	6.351	0.000	0.000	316	30	47	102	150	33	42	0	0	0	0	720
	PEAK	15.199	22.218	0.000	0.000												
	DAY/HR	30/14	30/14	30/ 1	30/ 1												
OCT	SUM	4.179	6.877	0.000	0.000	329	31	52	107	150	35	40	0	0	0	0	744
	PEAK	16.199	23.629	0.000	0.000												
	DAY/HR	29/14	29/14	31/24	31/24												
NOV	SUM	4.376	7.158	0.000	0.000	320	30	34	98	90	80	28	40	0	0	0	720
	PEAK	17.599	25.604	0.000	0.000												
	DAY/HR	30/14	30/14	30/24	30/24												
DEC	SUM	4.898	7.961	0.000	0.000	330	27	39	101	22	150	4	71	0	0	0	744
	PEAK	18.998	27.580	0.000	0.000												
	DAY/HR	30/14	30/14	31/24	31/24												
YR	SUM	54.324	88.587	0.000	0.000	3846	344	507	867	1293	946	520	313	124	0	0	8760
	PEAK	20.598	29.837	0.000	0.000												
	MON/DAY	2/26	2/26	12/31	12/31												

SMALL BAR/LOUGE DEMO DESICCANT & EVAPORATIVE COOLING DOE-2.1E-001 Thu Nov 11 09:03:47 1993SDL RUN 3
NEW FEATURES IN DOE2.1E RUN 3 SYSTEM 3: STAND-ALONE EVAP COOLER 100% OUTSIDE AIR FOR SUMMER
REPORT- SS-A SYSTEM MONTHLY LOADS SUMMARY FOR SYS1 WEATHER FILE- TRY CHICAGO

	COOLING						HEATING						ELEC	
MONTH	COOLING ENERGY (MBTU)	TIME OF MAX DY	TIME OF MAX HR	DRY-BULB TEMP	WET-BULB TEMP	MAXIMUM COOLING LOAD (KBTU/HR)	HEATING ENERGY (MBTU)	TIME OF MAX DY	TIME OF MAX HR	DRY-BULB TEMP	WET-BULB TEMP	MAXIMUM HEATING LOAD (KBTU/HR)	ELEC-TRICAL ENERGY (KWH)	MAXIMUM ELEC LOAD (KW)
JAN	0.00000					0.000	-46.346	12	6	-5.F	-6.F	-128.215	2843.	5.555
FEB	0.00000					0.000	-39.509	8	6	5.F	4.F	-111.860	2572.	5.555
MAR	0.04588	3	16	79.F	62.F	16.799	-29.981	24	6	8.F	7.F	-109.149	2884.	5.555
APR	0.53425	27	18	85.F	62.F	42.204	-13.091	9	6	26.F	25.F	-72.920	2832.	7.823
MAY	0.42676	21	13	87.F	76.F	28.965	-6.220	7	6	33.F	29.F	-59.447	2972.	9.125
JUN	3.60564	4	16	85.F	67.F	43.629	-1.158	1	6	48.F	47.F	-28.508	3328.	9.125
JUL	11.41452	9	18	97.F	73.F	66.965	-0.051	15	7	72.F	70.F	-6.681	4316.	9.125
AUG	6.90245	19	15	90.F	71.F	57.125	-0.139	5	6	55.F	54.F	-14.753	3874.	9.125
SEP	2.06907	19	16	86.F	65.F	46.036	-4.028	23	6	36.F	33.F	-55.116	3020.	9.125
OCT	0.33634	4	17	78.F	61.F	19.307	-10.528	21	6	30.F	29.F	-67.169	2890.	7.339
NOV	0.13317	2	16	77.F	62.F	20.356	-25.296	14	10	29.F	28.F	-84.111	2755.	5.753
DEC	0.00000					0.000	-40.022	9	6	14.F	13.F	-98.636	2834.	5.555
TOTAL	25.468						-216.368						37120.	
MAX						66.965						-128.215		9.125

SMALL BAR/LOUGE
NEW FEATURES IN DOE2.1E RUN 3
REPORT- SS-I SYSTEM MONTHLY SENSIBLE LATENT SUMMARY FOR SYS1

DEMO DESICCANT & EVAPORATIVE COOLING
SYSTEM 3: STAND-ALONE EVAP COOLER

DOE-2.1E-001 Thu Nov 11 09:03:47 1993SDL RUN 3
100% OUTSIDE AIR FOR SUMMER
WEATHER FILE- TRY CHICAGO

MONTH	SENSIBLE COOLING ENERGY (MBTU)	LATENT COOLING ENERGY (MBTU)	MAX TOTAL COOLING ENERGY (KBTU/HR)	SENSIBLE HEAT RATIO AT MAX	TIME OF MAX DY	TIME OF MAX HR	SENSIBLE HEATING ENERGY (MBTU)	LATENT HEATING ENERGY (MBTU)	MAX TOTAL HEATING ENERGY (KBTU/HR)
JAN	0.00000	0.00000	0.000				-46.34553	0.00000	-128.21483
FEB	0.00000	0.00000	0.000				-39.50898	0.00000	-111.86038
MAR	0.08810	-0.04222	16.799	1.794	3	16	-29.98132	0.00000	-109.149
APR	0.91638	-0.38213	42.204	1.572	27	18	-13.09060	0.00000	-72.920
MAY	1.07030	-0.64355	28.965	1.564	21	13	-6.22016	0.00000	-59.447
JUN	7.12562	-3.51998	43.629	1.544	4	16	-1.15800	0.00000	-28.508
JUL	19.94967	-8.53515	66.965	1.488	9	18	-0.05131	0.00000	-6.681
AUG	12.60560	-5.70314	57.125	1.439	19	15	-0.13865	0.00000	-14.753
SEP	3.71848	-1.64941	46.036	1.593	19	16	-4.02763	0.00000	-55.116
OCT	0.62705	-0.29070	19.307	1.656	4	17	-10.52815	0.00000	-67.169
NOV	0.24850	-0.11533	20.356	1.679	2	16	-25.29569	0.00000	-84.111
DEC	0.00000	0.00000	0.000				-40.02211	0.00000	-98.63554
TOTAL	46.350	-20.882					-216.368	0.000	
MAX			66.965	1.488					-128.215

	-----COOLING-----				---HEATING---			DAY COOLING PEAK			
	JUL 9				JAN 12			JUL 13			
HOUR	HOURLY COOLING LOAD (KBTU)	SENSIBLE HEAT RATIO	DRY-BULB TEMP	WET-BULB TEMP	HOURLY HEATING LOAD (KBTU)	DRY-BULB TEMP	WET-BULB TEMP	HOURLY COOLING LOAD (KBTU)	SENSIBLE HEAT RATIO	DRY-BULB TEMP	WET-BULB TEMP
1	18.586	1.893	78.F	68.F	-105.199	5.F	4.F	13.156	1.735	76.F	66.F
2	10.921	1.994	76.F	68.F	-109.870	3.F	2.F	6.103	1.805	74.F	66.F
3	7.535	2.129	75.F	68.F	-117.055	1.F	0.F	6.024	1.759	74.F	65.F
4	2.947	2.498	73.F	67.F	-122.936	-2.F	-3.F	3.880	1.749	73.F	62.F
5	1.161	2.497	72.F	66.F	-127.213	-4.F	-5.F	1.176	1.780	72.F	62.F
6	1.330	3.219	71.F	65.F	-128.215	-5.F	-6.F	3.219	1.936	72.F	63.F
7	8.812	2.257	75.F	68.F	-127.528	-6.F	-7.F	5.452	1.953	73.F	65.F
8	14.393	2.027	77.F	69.F	-128.084	-7.F	-7.F	12.232	1.756	76.F	69.F
9	25.005 *	1.666	82.F	72.F	-123.421	-8.F	-8.F	28.616	1.505	82.F	72.F
10	28.507 *	1.604	85.F	74.F	-113.909	-7.F	-7.F	35.691 *	1.440	86.F	74.F
11	34.209 *	1.569	88.F	75.F	-98.700	-4.F	-5.F	38.948 *	1.423	89.F	76.F
12	39.769 *	1.547	91.F	76.F	-83.480	0.F	0.F	44.518 *	1.409	93.F	78.F
13	45.301 *	1.516	92.F	75.F	-71.690	4.F	2.F	50.876 *	1.390	95.F	78.F
14	49.808 *	1.537	91.F	72.F	-69.016	6.F	4.F	56.770 *	1.391	96.F	77.F
15	57.876 *	1.449	94.F	74.F	-70.299	4.F	2.F	59.700 *	1.404	97.F	77.F
16	60.383 *	1.505	95.F	73.F	-75.851	3.F	1.F	55.700 *	1.416	97.F	78.F
17	66.965 *	1.488	97.F	73.F	-86.667	1.F	0.F	62.883 *	1.432	99.F	77.F
18	64.296 *	1.488	96.F	73.F	-97.191	-2.F	-3.F	59.928 *	1.446	97.F	76.F
19	57.884 *	1.511	94.F	73.F	-95.165	-4.F	-5.F	56.467 *	1.466	95.F	75.F
20	31.683 *	1.772	84.F	70.F	-102.361	-4.F	-5.F	50.045 *	1.493	93.F	75.F
21	11.533 *	2.629	78.F	70.F	-101.305	-3.F	-4.F	41.965 *	1.568	90.F	74.F
22	1.559 *	10.802	76.F	71.F	-99.099	-3.F	-4.F	34.590 *	1.651	87.F	73.F
23	0.000	0.000	70.F	67.F	-99.160	-2.F	-3.F	32.306 *	1.647	86.F	73.F
24	0.000	0.000	70.F	67.F	-100.653	-1.F	-2.F	30.531 *	1.616	85.F	73.F
	---				---			---			
SUM								790.774			
MAX	66.965				-128.215						

SYSTEM-TYPE	EVAP-COOL	SQFT/TON	387.1
COOLING PEAK	31.00 (BTU/HR- SQFT)	HEATING PEAK	-59.36 (BTU/HR- SQFT)
SUPPLY AIR PEAK FLOW	1.65 (CFM/SQFT)	MIN-OA/PERSON	20.40 (CFM)
OA FRAC AT CLG PEAK	1.000	OA FRAC AT HTG PEAK	0.274

* ASTERISKS INDICATE HOURS LOADS NOT MET

TOTAL HOURS AT RELATIVE HUMIDITY LEVEL AND TIME OF DAY

HOUR	1AM	2	3	4	5	6	7	8	9	10	11	12	1PM	2	3	4	5	6	7	8	9	10	11	12	TOTAL
80-100	0	1	1	2	2	2	2	0	3	3	2	0	0	0	0	0	1	1	1	1	1	2	0	1	26
70-80	16	12	12	11	9	9	10	15	19	23	25	26	28	22	25	29	23	17	16	18	19	20	23	19	446
60-70	44	32	30	31	29	30	34	28	32	33	34	37	30	38	36	33	45	50	47	44	41	39	35	37	869
50-60	46	41	36	34	36	35	30	35	40	34	38	39	39	37	37	36	32	28	39	40	41	45	49	50	917
40-50	44	37	38	36	38	41	43	41	48	47	42	45	46	50	49	50	50	52	41	43	52	52	55	50	1090
30-40	85	62	51	43	41	37	40	42	48	54	56	52	65	55	55	60	66	74	82	84	94	94	100	93	1533
0-30	130	146	135	146	148	149	144	142	147	171	168	166	157	163	163	157	148	143	139	135	117	113	103	115	3445

TOTAL HOURS AT TEMPERATURE LEVEL AND TIME OF DAY

HOUR	1AM	2	3	4	5	6	7	8	9	10	11	12	1PM	2	3	4	5	6	7	8	9	10	11	12	TOTAL
ABOVE 85	0	0	0	0	0	0	0	0	0	0	0	0	0	0	0	0	0	0	0	0	0	0	0	0	0
80-85	0	0	0	0	0	0	0	0	1	1	6	10	12	13	13	15	15	14	10	9	6	5	2	0	132
75-80	90	65	55	45	39	45	52	64	93	107	122	145	153	153	156	154	152	151	146	137	133	127	125	101	2610
70-75	275	266	248	258	264	258	251	239	243	256	237	210	200	199	196	196	198	200	209	219	226	233	238	264	5583
65-70	0	0	0	0	0	0	0	0	0	1	0	0	0	0	0	0	0	0	0	0	0	0	0	0	1
60-65	0	0	0	0	0	0	0	0	0	0	0	0	0	0	0	0	0	0	0	0	0	0	0	0	0
BELOW 60	0	0	0	0	0	0	0	0	0	0	0	0	0	0	0	0	0	0	0	0	0	0	0	0	0

SMALL BAR/LOUGE
NEW FEATURES IN DOE2.1E RUN 3
REPORT- PS-B MONTHLY UTILITY AND FUEL USE SUMMARY

DEMO DESICCANT & EVAPORATIVE COOLING
SYSTEM 3: STAND-ALONE EVAP COOLER

DOE-2.1E-001 Thu Nov 11 09:03:47 1993PDL RUN 3
100% OUTSIDE AIR FOR SUMMER
WEATHER FILE- TRY CHICAGO

MONTH	ELECTRICITY METER-1 BTU/UNIT: 3413./KWH	NATURAL-GAS METER-1 100000./THERM
JAN		
ENERGY CONSUMPTION (UNITS/MO)	2862.7	747.6
PEAK DEMAND (UNITS/HR OR DAY)	5.6	1.8
PEAK DAY/HR	1/18	12/ 8
FEB		
ENERGY CONSUMPTION (UNITS/MO)	2572.3	648.5
PEAK DEMAND (UNITS/HR OR DAY)	5.6	1.6
PEAK DAY/HR	1/19	4/ 9
MAR		
ENERGY CONSUMPTION (UNITS/MO)	2883.7	534.2
PEAK DEMAND (UNITS/HR OR DAY)	5.6	1.5
PEAK DAY/HR	1/19	24/ 8
APR		
ENERGY CONSUMPTION (UNITS/MO)	2832.3	284.5
PEAK DEMAND (UNITS/HR OR DAY)	7.8	1.1
PEAK DAY/HR	27/19	9/ 6
MAY		
ENERGY CONSUMPTION (UNITS/MO)	2972.1	180.2
PEAK DEMAND (UNITS/HR OR DAY)	9.1	0.9
PEAK DAY/HR	16/18	7/ 6
JUN		
ENERGY CONSUMPTION (UNITS/MO)	3328.2	95.0
PEAK DEMAND (UNITS/HR OR DAY)	9.1	0.5
PEAK DAY/HR	6/18	1/ 6
JUL		
ENERGY CONSUMPTION (UNITS/MO)	4316.4	73.2
PEAK DEMAND (UNITS/HR OR DAY)	9.1	0.3
PEAK DAY/HR	2/24	10/12
AUG		
ENERGY CONSUMPTION (UNITS/MO)	3873.8	73.6
PEAK DEMAND (UNITS/HR OR DAY)	9.1	0.3
PEAK DAY/HR	10/21	10/18
SEP		
ENERGY CONSUMPTION (UNITS/MO)	3019.8	134.8
PEAK DEMAND (UNITS/HR OR DAY)	9.1	0.8
PEAK DAY/HR	10/21	23/ 6
OCT		
ENERGY CONSUMPTION (UNITS/MO)	2889.6	237.7
PEAK DEMAND (UNITS/HR OR DAY)	7.3	1.0
PEAK DAY/HR	30/19	2/ 8
NOV		
ENERGY CONSUMPTION (UNITS/MO)	2755.1	451.9
PEAK DEMAND (UNITS/HR OR DAY)	5.8	1.3
PEAK DAY/HR	2/19	14/11
DEC		
ENERGY CONSUMPTION (UNITS/MO)	2833.6	664.5
PEAK DEMAND (UNITS/HR OR DAY)	5.6	1.4
PEAK DAY/HR	1/19	26/10
TOTAL		
ENERGY CONSUMPTION (UNITS/YR)	37119.7	4125.7
PEAK DEMAND (UNITS/HR OR DAY)	9.1	1.8

ELECTRICAL LOADS	KWH SUPPLIED	PCT OF TOTAL LOAD
ELECTRICITY	37119.7	100.0
LOAD SATISFIED	37119.7	100.0
TOTAL LOAD ON PLANT	37120.1	

SUMMARY OF LOADS MET

TYPE OF LOAD	TOTAL LOAD (MBTU)	LOAD SATISFIED (MBTU)	TOTAL OVERLOAD (MBTU)	PEAK OVERLOAD (MBTU)	HOURS OVERLOADED
ELECTRICAL LOADS	126.7	126.7	0.000	0.000	0

ENERGY TYPE:	ELECTRICITY	NATURAL-GAS
UNITS: MBTU		
CATEGORY OF USE		
AREA LIGHTS	35.7	0.0
MISC EQUIPMT	16.9	0.0
SPACE HEAT	0.0	324.0
SPACE COOL	12.0	0.0
VENT FANS	62.1	0.0
DOMHOT WATER	0.0	88.6
TOTAL	126.7	412.6

TOTAL SITE ENERGY	539.27 MBTU	249.7 KBTU/SQFT-YR GROSS-AREA	249.7 KBTU/SQFT-YR NET-AREA
TOTAL SOURCE ENERGY	792.70 MBTU	367.0 KBTU/SQFT-YR GROSS-AREA	367.0 KBTU/SQFT-YR NET-AREA

PERCENT OF HOURS ANY SYSTEM ZONE OUTSIDE OF THROTTLING RANGE = 3.7
PERCENT OF HOURS ANY PLANT LOAD NOT SATISFIED = 0.0

NOTE: ENERGY IS APPORTIONED HOURLY TO ALL END-USE CATEGORIES.

SMALL BAR/LOUGE
NEW FEATURES IN DOE2.1E RUN 3
REPORT- ES-D ENERGY COST SUMMARY

DEMO DESICCANT & EVAPORATIVE COOLING
SYSTEM 3: STAND-ALONE EVAP COOLER

DOE-2.1E-001 Thu Nov 11 09:03:47 1993EDL RUN 3
100% OUTSIDE AIR FOR SUMMER

UTILITY-RATE	RESOURCE	METERS	METERED ENERGY UNITS/YR	TOTAL CHARGE ($)	VIRTUAL RATE ($/UNIT)	RATE USED ALL YEAR?
ELEC-COST	ELECTRICITY	1 2 3 4 5	37120. KWH	3002.	0.0809	YES
GAS-COST	NATURAL-GAS	1 2 3 4 5	4126. THERM	2626.	0.6365	YES
				==========		
				5628.		

ENERGY COST/GROSS BLDG AREA: 2.61
ENERGY COST/NET BLDG AREA: 2.61

SMALL BAR/LOUGE DEMO DESICCANT & EVAPORATIVE COOLING DOE-2.1E-001 Thu Nov 11 09:03:47 1993EDL RUN 3
NEW FEATURES IN DOE2.1E RUN 3 SYSTEM 3: STAND-ALONE EVAP COOLER 100% OUTSIDE AIR FOR SUMMER
REPORT- ES-E SUMMARY OF UTILITY-RATE: ELEC-COST

UTILITY-RATE: ELEC-COST
RESOURCE: ELECTRICITY DEMAND-WINDOW: HOUR 3413. BTU/KWH
METERS: 1 2 3 4 5 BILLING-DAY: 31 RATE-LIMITATION: 0.0000
POWER-FACTOR: 0.80 EXCESS-KVAR-FRAC: 0.30 EXCESS-KVAR-CHG: 0.0000

RATE-QUALIFICATIONS
MIN-ENERGY: 0.0
MAX-ENERGY: 0.0
MIN-DEMAND: 0.0
MAX-DEMAND: 0.0
QUALIFY-RATE: ALL-MONTHS
USE-MIN-QUAL: NO

BLOCK-CHARGES
E-SM
E-WN

DEMAND-RATCHETS

MIN-MON-RATCHETS

MONTH	METERED ENERGY KWH	BILLING ENERGY KWH	METERED DEMAND KW	BILLING DEMAND KW	ENERGY CHARGE ($)	DEMAND CHARGE ($)	ENERGY CST ADJ ($)	TAXES ($)	SURCHRG ($)	FIXED CHARGE ($)	MINIMUM CHARGE ($)	VIRTUAL RATE ($/UNIT)	TOTAL CHARGE ($)
JAN	2843	2843	5.6	5.6	197	4	0	0	0	22	0	0.0787	224
FEB	2572	2572	5.6	5.6	184	4	0	0	0	22	0	0.0816	210
MAR	2884	2884	5.6	5.6	200	4	0	0	0	22	0	0.0783	226
APR	2832	2832	7.8	7.8	204	6	0	0	0	22	0	0.0821	232
MAY	2972	2972	9.1	9.1	228	7	0	0	0	22	0	0.0865	257
JUN	3328	3328	9.1	9.1	246	7	0	0	0	22	0	0.0828	276
JUL	4316	4316	9.1	9.1	297	7	0	0	0	22	0	0.0756	326
AUG	3874	3874	9.1	9.1	274	7	0	0	0	22	0	0.0784	304
SEP	3020	3020	9.1	9.1	231	7	0	0	0	22	0	0.0860	260
OCT	2890	2890	7.3	7.3	217	6	0	0	0	22	0	0.0846	244
NOV	2755	2755	5.8	5.8	194	5	0	0	0	22	0	0.0799	220
DEC	2834	2834	5.6	5.6	197	4	0	0	0	22	0	0.0788	223
TOTAL	37120	37120	9.1		2669	72	0	0	0	261		0.0809	3002

REPORT- ES-E SUMMARY OF UTILITY-RATE: GAS-COST

UTILITY-RATE: GAS-COST
RESOURCE: NATURAL-GAS
METERS: 1 2 3 4 5
DEMAND-WINDOW: HOUR
BILLING-DAY: 31
100000. BTU/THERM
RATE-LIMITATION: 0.0000

RATE-QUALIFICATIONS

MIN-ENERGY: 0.0
MAX-ENERGY: 0.0
MIN-DEMAND: 0.0
MAX-DEMAND: 0.0
QUALIFY-RATE: ALL-MONTHS
USE-MIN-QUAL: NO

BLOCK-CHARGES

GAS-CH

DEMAND-RATCHETS

MIN-MON-RATCHETS

MONTH	METERED ENERGY THERM	BILLING ENERGY THERM	METERED DEMAND THERMS	BILLING DEMAND THERMS	ENERGY CHARGE ($)	DEMAND CHARGE ($)	ENERGY CST ADJ ($)	TAXES ($)	SURCHRG ($)	FIXED CHARGE ($)	MINIMUM CHARGE ($)	VIRTUAL RATE ($/UNIT)	TOTAL CHARGE ($)
JAN	748	748	1.8	1.8	429	0	0	0	0	11	0	0.5882	440
FEB	649	649	1.6	1.6	380	0	0	0	0	11	0	0.6026	391
MAR	534	534	1.5	1.5	324	0	0	0	0	11	0	0.6257	334
APR	285	285	1.1	1.1	183	0	0	0	0	11	0	0.6807	194
MAY	180	180	0.9	0.9	116	0	0	0	0	11	0	0.7025	127
JUN	95	95	0.5	0.5	61	0	0	0	0	11	0	0.7559	72
JUL	73	73	0.3	0.3	47	0	0	0	0	11	0	0.7896	58
AUG	74	74	0.3	0.3	47	0	0	0	0	11	0	0.7889	58
SEP	135	135	0.8	0.8	87	0	0	0	0	11	0	0.7226	97
OCT	238	238	1.0	1.0	153	0	0	0	0	11	0	0.6881	164
NOV	452	452	1.3	1.3	283	0	0	0	0	11	0	0.6497	294
DEC	664	664	1.4	1.4	388	0	0	0	0	11	0	0.6000	399
TOTAL	4126	4126	1.8		2497	0	0	0	0	129		0.6365	2626

S D L P R O C E S S O R I N P U T D A T A

Thu Nov 11 09:03:47 1993SDL RUN 4

```
* 299 *
* 300 * TITLE  LINE-2 * CONVENTIONAL SYSTEM FOR COMPARISON *
* 301 *        LINE-3 * NEW FEATURES IN DOE2.1E RUN 4 *
* 302 *        LINE-4 * SYSTEM 4: PKG PSZ WATER COOLED UNIT *
* 303 *        LINE-5 * WITH WATER SIDE ECONOMIZER *  ..
* 304 *
* 305 * SYSTEMS-REPORT   S (SS-A,SS-J,SS-N,SS-O)  ..
* 306 *
* 307 * FANSON  SCH THRU DEC 31 (MON,SAT) (1,24) (1)
* 308 *                          (SUN,HOL) (1,2) (1) (3,9)(0) (10,24)(1)  ..
* 309 * C-SETPT SCH THRU DEC 31 (ALL) (1,24) (76)  ..
* 310 * H-SETPT SCH THRU DEC 31 (ALL) (1,24) (72)  ..
* 311 * ENV  Z-C  D-H-T 72  D-C-T 74  H-T-SCH H-SETPT  C-T-SCH C-SETPT    ..
* 312 *
* 313 * BLDG Z  Z-C ENV  O-CFM/P 20  CFM/SQFT .7  ..
* 314 *
* 315 * SYS1  SYSTEM  S-TYPE=PSZ          OA-CONTROL=FIXED
* 316 *               SUPPLY-CFM=2500     HEATING-CAPACITY=-120000
* 317 *               MAX-SUPPLY-T=100    MIN-SUPPLY-T =55
* 318 *               SUPPLY-STATIC=2.5   SUPPLY-EFF=.47
* 319 *               SIZING-RATIO=1.2    COOL-SIZING-RAT=.833
* 320 *                                   HEAT-SIZING-RAT=.75
* 321 *               F-SCH=FANSON        ZONE-NAMES (BLDG)
* 322 *               WS-ECONO = YES      CONDENSER-TYPE=WATER-COOLED ..
* 323 *
* 324 * WS-ECON  PLANT-ASSIGNMENT
* 325 *               SYSTEM-NAMES = (SYS1)
* 326 *               CIRC-PUMP-TYPE = VARIABLE-FLOW
* 327 *               TWR-SET-POINT  = 55  MIN-TWR-WTR-T = 55
* 328 *               DHW-GAL/MIN  = .666
* 329 *               DHW-SCH      = DOMHW  ..
* 330 *
* 331 * D1 = D-SCH (1,7) (0)  (8,21) (.1,.2,.3,.4,.55,.6,.6,.45,.4,.45,.45,.4,.3,.3)
* 332 *                      (22,24) (0)  ..
* 333 * D2 = D-SCH (1,7) (0)  (8,22) (.15,.2,.25,.4,.5,.55,.55,.45,.45,.45,.45,.4,.35,
* 334 *                              .25,.2)  (23,24) (0)  ..
* 335 * D3 = D-SCH (1,9) (0)  (10,19) (.1,.25,.3,.35,.35,.3,.3,.35,.3,.2)
* 336 *                      (20,24) (0)  ..
* 337 * DOMHW = SCH THRU DEC 31 (WD) D1  (SAT) D2  (SUN,HOL) D3  ..
* 338 * END  ..
* 339 * COMPUTE SYSTEMS  ..
* 340 * INPUT PLANT  ..
```

P D L P R O C E S S O R I N P U T D A T A

Thu Nov 11 09:03:47 1993PDL RUN 4

```
* 341 *
* 342 * WS-ECON  PLANT-ASSIGNMENT  ..
* 343 * PLANT-REPORT   S (BEPS)  ..
* 344 * END  ..
* 345 * COMPUTE PLANT  ..
* 346 * INPUT ECONOMICS  ..
```

```
* 347 *
* 348 * ECONOMICS-REPORT  S (ES-D,ES-E)  ..
* 349 *
* 350 * ELEC-COST = UTILITY-RATE  RESOURCE = ELECTRICITY
* 351 *                          MONTH-CHGS = (21.75)
* 352 *                          DEMAND-CHGS = (.81)
* 353 *                          BLOCK-CHARGES = (E-SM,E-WN)  ..
* 354 *
* 355 * E-SM      = BLOCK-CHARGE  BLOCK-SCH   = SEASON
* 356 *                          SCH-FLAG    = 2
* 357 *                          BLOCK1-TYPE = ENERGY
* 358 *                          BLOCK1-DATA = (1250,.0829)
* 359 *                          BLOCK2-TYPE = KWH/KW
* 360 *                          BLOCK2-DATA = (125,.0829,0
* 361 *                                           1,.0514,0)  ..
* 362 *
* 363 * E-WN      = BLOCK-CHARGE  BLOCK-SCH   = SEASON
* 364 *                          SCH-FLAG    = 1
* 365 *                          BLOCK1-TYPE = ENERGY
* 366 *                          BLOCK1-DATA = (1250,.0778)
* 367 *                          BLOCK2-TYPE = KWH/KW
* 368 *                          BLOCK2-DATA = (125,.0778,0
* 369 *                                           1,.0514,0)  ..
* 370 *
* 371 * SEASON    = SCHEDULE THRU APR 30 (ALL) (1,24)(1)
* 372 *                     THRU OCT 31 (ALL) (1,24)(2)
* 373 *                     THRU DEC 31 (ALL) (1,24)(1)  ..
* 374 *
* 375 * GAS-COST  = UTILITY-RATE  RESOURCE = NATURAL-GAS
* 376 *                          MONTH-CHGS = (10.73)
* 377 *                          BLOCK-CHARGES = (GAS-CH)  ..
* 378 *
* 379 * GAS-CH    = BLOCK-CHARGE  BLOCK1-TYPE = ENERGY
* 380 *                          BLOCK1-DATA = (400,.643
* 381 *                                           1,.4943)  ..
* 382 *
* 383 * END  ..
* 384 * COMPUTE ECONOMICS  ..
* 385 * INPUT SYSTEMS  ..
```

SYSTEM NAME	SYSTEM TYPE	ALTITUDE MULTIPLIER	FLOOR AREA (SQFT)	MAX PEOPLE
SYS1	PSZ	1.020	2160.0	48.

SUPPLY FAN (CFM)	ELEC (KW)	DELTA-T (F)	RETURN FAN (CFM)	ELEC (KW)	DELTA-T (F)	OUTSIDE AIR RATIO	COOLING CAPACITY (KBTU/HR)	SENSIBLE (SHR)	HEATING CAPACITY (KBTU/HR)	COOLING EIR (BTU/BTU)	HEATING EIR (BTU/BTU)
3060.	1.873	1.9	0.	0.000	0.0	0.320	108.735	0.792	-90.000	0.24	0.20

ZONE NAME	SUPPLY FLOW (CFM)	EXHAUST FLOW (CFM)	FAN (KW)	MINIMUM FLOW RATIO	OUTSIDE AIR FLOW (CFM)	COOLING CAPACITY (KBTU/HR)	SENSIBLE (SHR)	EXTRACTION RATE (KBTU/HR)	HEATING CAPACITY (KBTU/HR)	ADDITION RATE (KBTU/HR)	MULTIPLIER
BLDG	3060.	0.	0.000	1.000	979.	0.00	0.00	62.79	0.00	-45.86	1.0

SMALL BAR/LOUGE — CONVENTIONAL SYSTEM FOR COMPARISON — DOE-2.1E-001 Thu Nov 11 09:03:47 1993SDL RUN 4
NEW FEATURES IN DOE2.1E RUN 4 — SYSTEM 4: PKG PSZ WATER COOLED UNIT — WITH WATER SIDE ECONOMIZER
REPORT- SS-P LOAD, ENERGY AND PART LOAD PUMP OPERATION IN WS-ECON — WEATHER FILE- TRY CHICAGO

CIRC PUMP SIZE is 32.6 (GAL/MIN) POWER = 0.52 (KW) HEAT GAIN = 1612. (BTU/HR) or 0.1 (DEG F) MIN PLR = 0.50

MONTH		HEAT GAIN (MBTU) (KBTU/HR)	ENERGY USE (KWH) (KW)	HEAT MODE (KWH) (KW)	COOL MODE (KWH) (KW)	Number of hours within each PART LOAD range 00 10	10 20	20 30	30 40	40 50	50 60	60 70	70 80	80 90	90 100	100 +	TOTAL RUN HOURS
JAN	SUM	0.320	104.160	0.000	104.160	0	0	0	0	0	744	0	0	0	0	0	744
	PEAK	0.430	0.140	0.000	0.140												
	DAY/HR	31/24	31/24	31/24	31/24												
FEB	SUM	0.289	94.080	0.000	94.080	0	0	0	0	0	672	0	0	0	0	0	672
	PEAK	0.430	0.140	0.000	0.140												
	DAY/HR	28/24	28/24	28/24	28/24												
MAR	SUM	0.323	105.313	0.000	105.313	0	0	0	0	0	741	0	0	0	0	3	744
	PEAK	1.611	0.524	0.000	0.524												
	DAY/HR	3/17	3/17	31/24	3/17												
APR	SUM	0.352	114.636	0.000	114.636	0	0	0	0	0	684	0	0	0	0	36	720
	PEAK	1.611	0.524	0.000	0.524												
	DAY/HR	29/21	29/21	30/ 1	29/21												
MAY	SUM	0.371	120.822	0.000	120.822	0	0	0	0	0	699	1	1	1	0	42	744
	PEAK	1.611	0.524	0.000	0.524												
	DAY/HR	31/13	31/13	31/ 1	31/13												
JUN	SUM	0.524	170.429	0.000	170.429	0	0	0	0	0	528	12	3	2	4	171	720
	PEAK	1.611	0.524	0.000	0.524												
	DAY/HR	30/23	30/23	30/ 1	30/23												
JUL	SUM	0.666	216.732	0.000	216.732	0	0	0	0	0	369	61	51	29	3	231	744
	PEAK	1.611	0.524	0.000	0.524												
	DAY/HR	31/24	31/24	31/ 1	31/24												
AUG	SUM	0.612	199.099	0.000	199.099	0	0	0	0	0	450	44	24	4	0	222	744
	PEAK	1.611	0.524	0.000	0.524												
	DAY/HR	31/13	31/13	31/ 1	31/13												
SEP	SUM	0.391	127.194	0.000	127.194	0	0	0	0	0	647	7	0	0	0	66	720
	PEAK	1.611	0.524	0.000	0.524												
	DAY/HR	26/19	26/19	30/ 1	26/19												
OCT	SUM	0.347	113.000	0.000	113.000	0	0	0	0	0	721	0	0	0	0	23	744
	PEAK	1.611	0.524	0.000	0.524												
	DAY/HR	31/20	31/20	31/24	31/20												
NOV	SUM	0.326	106.180	0.000	106.180	0	0	0	0	0	706	0	0	0	0	14	720
	PEAK	1.611	0.524	0.000	0.524												
	DAY/HR	2/19	2/19	30/24	2/19												
DEC	SUM	0.320	104.160	0.000	104.160	0	0	0	0	0	744	0	0	0	0	0	744
	PEAK	0.430	0.140	0.000	0.140												
	DAY/HR	31/24	31/24	31/24	31/24												
YR	SUM	4.840	1575.895	0.000	1575.895	0	0	0	0	0	7705	125	79	36	7	808	8760
	PEAK	1.611	0.524	0.000	0.524												
	MON/DAY	11/ 2	11/ 2	12/31	11/ 2												

SMALL BAR/LOUGE CONVENTIONAL SYSTEM FOR COMPARISON DOE-2.1E-001 Thu Nov 11 09:03:47 1993SDL RUN 4
NEW FEATURES IN DOE2.1E RUN 4 SYSTEM 4: PKG PSZ WATER COOLED UNIT WITH WATER SIDE ECONOMIZER
REPORT- SS-P LOAD, ENERGY AND PART LOAD COOLING TOWER FOR WS-ECON WEATHER FILE- TRY CHICAGO

TOWER SIZE is 0.131 (MBTU/HR) FAN = 0.43 (KW) PUMP = 0.18 (KW) PUMP = 32.63 (GAL/MIN)

MONTH	SUM PEAK	UNIT LOAD (MBTU) (KBTU/HR)	ENERGY USE (KWH) (KW)	FAN ENERGY (KWH) (KW)	PUMP ENERGY (KWH) (KW)	Number of hours within each PART LOAD range 00 10	10 20	20 30	30 40	40 50	50 60	60 70	70 80	80 90	90 100	100 +	TOTAL RUN HOURS
JAN	SUM	0.320	266.200	134.188	132.012	744	0	0	0	0	0	0	0	0	0	0	744
	PEAK	0.437	0.499	0.322	0.177												
	DAY/HR	26/24	30/16	30/16	31/24												
FEB	SUM	0.289	237.945	118.709	119.237	672	0	0	0	0	0	0	0	0	0	0	672
	PEAK	0.437	0.478	0.301	0.177												
	DAY/HR	28/14	28/13	28/13	28/24												
MAR	SUM	0.390	296.007	163.996	132.012	720	13	3	3	1	0	1	0	0	1	2	744
	PEAK	12.142	0.612	0.434	0.177												
	DAY/HR	9/14	9/15	9/15	31/24												
APR	SUM	1.712	344.443	217.438	127.003	615	41	12	9	1	0	0	0	2	20	20	720
	PEAK	3.010	0.612	0.434	0.177												
	DAY/HR	30/21	30/20	30/20	30/ 1												
MAY	SUM	3.770	400.941	272.418	128.522	596	53	11	6	0	1	0	1	6	37	33	744
	PEAK	2.696	0.612	0.434	0.177												
	DAY/HR	31/22	31/23	31/23	31/ 1												
JUN	SUM	13.370	426.133	306.926	119.205	368	72	15	0	0	0	0	0	9	126	130	720
	PEAK	60.142	0.612	0.434	0.177												
	DAY/HR	30/17	30/ 1	30/ 1	30/ 1												
JUL	SUM	34.662	432.348	322.987	109.357	170	30	7	4	0	0	0	0	15	245	273	744
	PEAK	-0.035	0.612	0.434	0.177												
	DAY/HR	31/ 1	31/ 1	31/ 1	31/ 1												
AUG	SUM	24.834	434.350	322.949	111.398	226	53	11	2	1	1	0	1	10	203	236	744
	PEAK	-0.701	0.612	0.434	0.177												
	DAY/HR	31/ 1	31/ 1	31/ 1	31/ 1												
SEP	SUM	5.836	402.971	279.971	122.999	525	66	10	3	2	0	1	1	4	46	62	720
	PEAK	9.048	0.612	0.434	0.177												
	DAY/HR	29/ 2	28/ 1	28/ 1	30/ 1												
OCT	SUM	1.207	372.422	241.035	131.386	665	43	3	3	1	0	0	1	0	14	14	744
	PEAK	40.450	0.612	0.434	0.177												
	DAY/HR	31/15	31/24	31/24	31/24												
NOV	SUM	0.780	299.540	171.787	127.753	688	14	3	1	0	0	0	0	0	5	9	720
	PEAK	5.029	0.612	0.434	0.177												
	DAY/HR	24/ 2	24/ 3	24/ 3	30/24												
DEC	SUM	0.320	267.713	135.702	132.012	744	0	0	0	0	0	0	0	0	0	0	744
	PEAK	0.433	0.422	0.244	0.177												
	DAY/HR	15/14	15/12	15/12	31/24												
YR	SUM	87.495	4181.049	2687.974	1493.013	6733	385	75	31	6	2	2	4	46	697	779	8760
	PEAK	5.029	0.612	0.434	0.177												
	MON/DAY	11/24	11/24	11/24	12/31												

SMALL BAR/LOUGE CONVENTIONAL SYSTEM FOR COMPARISON DOE-2.1E-001 Thu Nov 11 09:03:47 1993SDL RUN 4
NEW FEATURES IN DOE2.1E RUN 4 SYSTEM 4: PKG PSZ WATER COOLED UNIT WITH WATER SIDE ECONOMIZER
REPORT- SS-P LOAD, ENERGY AND PART LOAD WATER-SIDE ECONO OPERATION FOR WS-ECON WEATHER FILE- TRY CHICAGO

WSE TOWER SIZE is 0.0000 (MBTU/HR) POWER = 0.00 (KW) PUMP = 32.63 (GAL/MIN)

MONTH		UNIT LOAD SUM (MBTU) PEAK (KBTU/HR)	ENERGY USE (KWH) (KW)	Number of hours within each PART LOAD range 00-10	10-20	20-30	30-40	40-50	50-60	60-70	70-80	80-90	90-100	100+	TOTAL RUN HOURS
JAN	SUM	0.000	0.000	0	0	0	0	0	0	0	0	0	0	0	0
	PEAK	0.000	0.000												
	DAY/HR	31/24	31/24												
FEB	SUM	0.000	0.000	0	0	0	0	0	0	0	0	0	0	0	0
	PEAK	0.000	0.000												
	DAY/HR	28/24	28/24												
MAR	SUM	0.100	0.000	2	1	0	0	0	1	1	0	1	0	3	9
	PEAK	22.266	0.000												
	DAY/HR	3/17	31/24												
APR	SUM	1.333	0.000	20	16	12	9	3	13	13	4	3	1	36	130
	PEAK	24.376	0.000												
	DAY/HR	26/15	30/ 1												
MAY	SUM	1.534	0.000	26	37	17	16	15	16	7	5	4	2	42	187
	PEAK	24.512	0.000												
	DAY/HR	23/15	31/ 1												
JUN	SUM	4.829	0.000	29	21	22	20	24	25	19	20	13	17	171	381
	PEAK	29.525	0.000												
	DAY/HR	26/20	30/ 1												
JUL	SUM	4.173	0.000	6	10	11	6	13	11	15	9	13	13	231	338
	PEAK	23.922	0.000												
	DAY/HR	12/12	31/ 1												
AUG	SUM	4.534	0.000	9	12	9	15	15	13	15	17	22	16	222	365
	PEAK	25.767	0.000												
	DAY/HR	31/13	31/ 1												
SEP	SUM	2.764	0.000	22	22	18	15	20	23	17	12	8	15	66	238
	PEAK	24.713	0.000												
	DAY/HR	6/18	30/ 1												
OCT	SUM	1.344	0.000	13	9	17	18	10	8	10	9	4	3	23	124
	PEAK	23.806	0.000												
	DAY/HR	4/17	31/24												
NOV	SUM	0.461	0.000	3	2	3	3	5	0	2	0	3	0	14	35
	PEAK	23.395	0.000												
	DAY/HR	1/17	30/24												
DEC	SUM	0.000	0.000	0	0	0	0	0	0	0	0	0	0	0	0
	PEAK	0.000	0.000												
	DAY/HR	31/24	31/24												
YR	SUM	21.073	0.000	130	130	109	102	105	110	99	76	71	67	808	1807
	PEAK	29.525	0.000												
	MON/DAY	6/26	12/31												

SMALL BAR/LOUGE CONVENTIONAL SYSTEM FOR COMPARISON DOE-2.1E-001 Thu Nov 11 09:03:47 1993SDL RUN 4
NEW FEATURES IN DOE2.1E RUN 4 SYSTEM 4: PKG PSZ WATER COOLED UNIT WITH WATER SIDE ECONOMIZER
REPORT- SS-P LOAD, ENERGY AND PART LOAD DHW TANK OPERATION FOR WS-ECON WEATHER FILE- TRY CHICAGO

TANK SIZE is 30.0 (GAL) HEATER CAP = 25.774 (KBTU/HR) FLOW RATE = 0.666 (GAL/MIN) PUMP = 0.000 (KW)

MONTH		UNIT LOAD (MBTU) (KBTU/HR)	ENERGY USE (MBTU) (KBTU/HR)	RCV EN USE (MBTU) (KBTU/HR)	PUMP ENERGY (KWH) (KW)	Number of hours within each PART LOAD range 00-10	10-20	20-30	30-40	40-50	50-60	60-70	70-80	80-90	90-100	100+	TOTAL RUN HOURS
JAN	SUM	5.160	8.354	0.000	0.000	329	26	41	16	107	70	85	30	40	0	0	744
	PEAK	19.998	28.991	0.000	0.000												
	DAY/HR	29/14	29/14	31/24	31/24												
FEB	SUM	4.837	7.807	0.000	0.000	296	24	36	13	96	65	77	27	38	0	0	672
	PEAK	20.598	29.837	0.000	0.000												
	DAY/HR	26/14	26/14	28/24	28/24												
MAR	SUM	5.390	8.675	0.000	0.000	322	27	39	12	101	77	89	31	46	0	0	744
	PEAK	20.198	29.273	0.000	0.000												
	DAY/HR	31/14	31/14	31/24	31/24												
APR	SUM	4.947	7.993	0.000	0.000	312	26	38	12	98	156	4	74	0	0	0	720
	PEAK	19.198	27.862	0.000	0.000												
	DAY/HR	30/14	30/14	30/ 1	30/ 1												
MAY	SUM	4.592	7.499	0.000	0.000	329	31	36	100	93	80	35	40	0	0	0	744
	PEAK	17.799	25.886	0.000	0.000												
	DAY/HR	28/14	28/14	31/ 1	31/ 1												
JUN	SUM	4.225	6.909	0.000	0.000	312	30	46	98	74	86	74	0	0	0	0	720
	PEAK	16.399	23.911	0.000	0.000												
	DAY/HR	30/14	30/14	30/ 1	30/ 1												
JUL	SUM	3.990	6.582	0.000	0.000	325	31	51	103	156	36	42	0	0	0	0	744
	PEAK	15.199	22.218	0.000	0.000												
	DAY/HR	30/14	30/14	31/ 1	31/ 1												
AUG	SUM	3.882	6.420	0.000	0.000	326	31	48	105	156	78	0	0	0	0	0	744
	PEAK	14.799	21.654	0.000	0.000												
	DAY/HR	31/14	31/14	31/ 1	31/ 1												
SEP	SUM	3.848	6.351	0.000	0.000	316	30	47	102	150	33	42	0	0	0	0	720
	PEAK	15.199	22.218	0.000	0.000												
	DAY/HR	30/14	30/14	30/ 1	30/ 1												
OCT	SUM	4.179	6.877	0.000	0.000	329	31	52	107	150	35	40	0	0	0	0	744
	PEAK	16.199	23.629	0.000	0.000												
	DAY/HR	29/14	29/14	31/24	31/24												
NOV	SUM	4.376	7.158	0.000	0.000	320	30	34	98	90	80	28	40	0	0	0	720
	PEAK	17.599	25.604	0.000	0.000												
	DAY/HR	30/14	30/14	30/24	30/24												
DEC	SUM	4.898	7.961	0.000	0.000	330	27	39	101	22	150	4	71	0	0	0	744
	PEAK	18.998	27.580	0.000	0.000												
	DAY/HR	30/14	30/14	31/24	31/24												
YR	SUM	54.324	88.587	0.000	0.000	3846	344	507	867	1293	946	520	313	124	0	0	8760
	PEAK	20.598	29.837	0.000	0.000												
	MON/DAY	2/26	2/26	12/31	12/31												

SMALL BAR/LOUGE CONVENTIONAL SYSTEM FOR COMPARISON DOE-2.1E-001 Thu Nov 11 09:03:47 1993SDL RUN 4
NEW FEATURES IN DOE2.1E RUN 4 SYSTEM 4: PKG PSZ WATER COOLED UNIT WITH WATER SIDE ECONOMIZER
REPORT- SS-A SYSTEM MONTHLY LOADS SUMMARY FOR SYS1 WEATHER FILE- TRY CHICAGO

	COOLING						HEATING						ELEC	
MONTH	COOLING ENERGY (MBTU)	TIME OF MAX DY	TIME OF MAX HR	DRY-BULB TEMP	WET-BULB TEMP	MAXIMUM COOLING LOAD (KBTU/HR)	HEATING ENERGY (MBTU)	TIME OF MAX DY	TIME OF MAX HR	DRY-BULB TEMP	WET-BULB TEMP	MAXIMUM HEATING LOAD (KBTU/HR)	ELEC-TRICAL ENERGY (KWH)	MAXIMUM ELEC LOAD (KW)
JAN	0.00000					0.000	-45.309	12	18	-2.F	-3.F	-92.450	2661.	5.293
FEB	0.00000					0.000	-39.493	8	3	9.F	8.F	-91.980	2407.	5.293
MAR	0.00639	3	15	76.F	65.F	3.853	-30.343	24	5	9.F	8.F	-91.648	2688.	5.293
APR	0.58648	28	15	78.F	68.F	44.883	-13.491	9	6	26.F	25.F	-72.588	2627.	7.425
MAY	2.28592	21	13	87.F	76.F	93.760	-6.579	7	6	33.F	29.F	-59.385	2787.	9.728
JUN	8.11245	20	18	91.F	78.F	112.399	-1.245	1	6	48.F	47.F	-29.239	3127.	12.925
JUL	24.90770	13	17	97.F	78.F	110.030	-0.030	6	6	61.F	55.F	-6.280	4365.	12.357
AUG	17.07346	26	17	94.F	76.F	93.576	-0.144	5	6	55.F	54.F	-16.026	3809.	11.558
SEP	3.56490	11	17	86.F	72.F	77.527	-4.315	23	6	36.F	33.F	-55.146	2798.	9.945
OCT	0.43696	30	19	73.F	67.F	39.738	-10.944	21	6	30.F	29.F	-66.940	2670.	7.836
NOV	0.13079	2	13	74.F	61.F	22.670	-25.690	14	11	29.F	27.F	-81.603	2567.	5.293
DEC	0.00000					0.000	-40.307	22	5	12.F	12.F	-91.038	2652.	5.293
TOTAL	57.105						-217.890						35157.	
MAX						112.399						-92.450		12.925

	-----COOLING-----				---HEATING---			DAY COOLING PEAK			
	JUN 20				JAN 12			JUL 14			
HOUR	HOURLY COOLING LOAD (KBTU)	SENSIBLE HEAT RATIO	DRY-BULB TEMP	WET-BULB TEMP	HOURLY HEATING LOAD (KBTU)	DRY-BULB TEMP	WET-BULB TEMP	HOURLY COOLING LOAD (KBTU)	SENSIBLE HEAT RATIO	DRY-BULB TEMP	WET-BULB TEMP
1	0.000	0.000	68.F	64.F	-92.321	5.F	4.F	57.778	0.629	83.F	72.F
2	0.000	0.000	68.F	64.F	-91.678	3.F	2.F	46.946	0.598	81.F	72.F
3	0.000	0.000	66.F	62.F	-92.169	1.F	0.F	41.182	0.602	80.F	71.F
4	0.000	0.000	66.F	62.F	-92.120	-2.F	-3.F	36.757	0.567	78.F	71.F
5	0.000	0.000	65.F	62.F	-91.835	-4.F	-5.F	31.531	0.575	77.F	70.F
6	0.000	0.000	65.F	62.F	-91.519	-5.F	-6.F	45.209	0.554	78.F	71.F
7	0.000	0.000	67.F	64.F	-90.621	-6.F	-7.F	50.389	0.581	79.F	71.F
8	0.000	0.000	73.F	65.F	-91.059	-7.F	-7.F	58.645	0.616	82.F	72.F
9	13.632	0.601	76.F	67.F	-89.166	-8.F	-8.F	71.819	0.622	86.F	74.F
10	58.000	0.612	80.F	71.F	-88.107	-7.F	-7.F	76.722	0.656	88.F	74.F
11	73.067	0.641	83.F	72.F	-86.549	-4.F	-5.F	91.147	0.642	91.F	76.F
12	86.662	0.617	84.F	74.F	-85.944	0.F	0.F	101.045	0.669	94.F	76.F
13	88.746	0.630	85.F	74.F	-86.327	4.F	2.F	97.068	0.694	96.F	77.F
14	98.444	0.639	88.F	75.F	-85.853	6.F	4.F	84.631	0.676	87.F	74.F
15	111.039	0.612	90.F	77.F	-85.468	4.F	2.F	66.646	0.625	76.F	71.F
16	111.027	0.595	90.F	78.F	-89.107	3.F	1.F	75.863	0.595	78.F	72.F
17	112.399	0.605	91.F	78.F	-91.800	1.F	0.F	75.282	0.577	78.F	72.F
18	104.465	0.617	90.F	77.F	-92.450	-2.F	-3.F	88.265	0.634	89.F	75.F
19	97.823	0.577	89.F	78.F	-90.242	-4.F	-5.F	85.882	0.616	87.F	75.F
20	73.346	0.553	79.F	74.F	-91.445	-4.F	-5.F	82.119	0.599	84.F	74.F
21	44.626	0.588	70.F	67.F	-90.104	-3.F	-4.F	81.383	0.591	84.F	74.F
22	38.037	0.578	69.F	66.F	-89.718	-3.F	-4.F	78.451	0.568	82.F	74.F
23	18.430	0.543	70.F	65.F	-89.955	-2.F	-3.F	66.057	0.594	80.F	72.F
24	12.885	0.594	71.F	64.F	-90.298	-1.F	-2.F	52.171	0.561	78.F	72.F
SUM								1642.990			
MAX	112.399				-92.450						

SYSTEM-TYPE	PSZ	SQFT/TON	230.6
COOLING PEAK	52.04 (BTU/HR- SQFT)	HEATING PEAK	-42.80 (BTU/HR- SQFT)
SUPPLY AIR PEAK FLOW	1.42 (CFM/SQFT)	MIN-OA/PERSON	20.40 (CFM)
OA FRAC AT CLG PEAK	0.320	OA FRAC AT HTG PEAK	0.320

* ASTERISKS INDICATE HOURS LOADS NOT MET

TOTAL HOURS AT RELATIVE HUMIDITY LEVEL AND TIME OF DAY

HOUR	1AM	2	3	4	5	6	7	8	9	10	11	12	1PM	2	3	4	5	6	7	8	9	10	11	12	TOTAL
80-100	0	0	0	0	0	0	0	0	0	0	0	0	0	0	0	0	0	0	0	0	0	0	0	0	0
70-80	3	2	4	3	4	11	4	1	0	2	1	2	0	0	0	0	2	1	1	4	5	10	8	2	70
60-70	39	30	35	32	33	39	42	33	34	22	18	13	8	1	3	8	9	11	15	22	26	31	33	29	566
50-60	57	45	34	37	38	41	43	47	61	68	65	76	40	41	42	58	85	69	71	84	87	85	76	73	1423
40-50	49	36	31	30	31	30	34	41	47	59	68	76	102	106	101	95	78	93	75	58	62	54	52	41	1449
30-40	51	47	45	46	39	36	52	49	47	49	49	56	75	56	61	57	74	79	77	83	92	98	96	85	1499
0-30	166	171	154	155	158	146	128	132	148	165	164	142	140	161	158	147	117	112	126	114	93	87	100	135	3319

	UNIT RUN TIME (HOURS)	TOTAL LOAD ON UNIT (MBTU)	ENERGY IN TO UNIT (MBTU)	AUXILIARY ENERGY (MBTU)	SUP UNIT LOAD (MBTU)	SUP UNIT ENERGY (MBTU)	WASTE HEAT GENERATED (MBTU)	WASTE HEAT USE (MBTU)		INDOOR FAN ENERGY (MBTU)
JAN	0.	0.000	0.000	0.126	0.000	0.000	0.000	0.000	0.000	0.000
FEB	0.	0.000	0.000	0.114	0.000	0.000	0.000	0.000	0.000	0.000
MAR	1.	0.006	0.002	0.113	0.000	0.000	0.000	0.000	0.000	0.089
APR	11.	0.586	0.144	0.058	0.000	0.000	0.000	0.000	0.000	0.908
MAY	26.	2.286	0.528	0.030	0.000	0.000	0.000	0.000	0.000	1.409
JUN	92.	8.112	1.906	0.001	0.000	0.000	0.000	0.000	0.000	2.733
JUL	242.	24.908	5.874	0.000	0.000	0.000	0.000	0.000	0.000	3.938
AUG	174.	17.073	4.008	0.000	0.000	0.000	0.000	0.000	0.000	3.618
SEP	39.	3.565	0.837	0.016	0.000	0.000	0.000	0.000	0.000	1.732
OCT	7.	0.437	0.106	0.052	0.000	0.000	0.000	0.000	0.000	0.911
NOV	4.	0.131	0.033	0.104	0.000	0.000	0.000	0.000	0.000	0.275
DEC	0.	0.000	0.000	0.127	0.000	0.000	0.000	0.000	0.000	0.000
ANNUAL	595.	57.105	13.438	0.741	0.000	0.000	0.000	0.000	0.000	15.613

CSPF (WITH PARASITICS) = 1.92 (BTU/BTU)

CSPF (WITHOUT PARASITICS) = 4.25 (BTU/BTU)

SMALL BAR/LOUGE CONVENTIONAL SYSTEM FOR COMPARISON DOE-2.1E-001 Thu Nov 11 09:03:47 1993SDL RUN 4
NEW FEATURES IN DOE2.1E RUN 4 SYSTEM 4: PKG PSZ WATER COOLED UNIT WITH WATER SIDE ECONOMIZER
REPORT- SS-Q HEAT PUMP HEATING SUMMARY FOR SYS1 WEATHER FILE- TRY CHICAGO

	UNIT RUN TIME (HOURS)	TOTAL LOAD ON UNIT (MBTU)	ENERGY IN TO UNIT (MBTU)	AUXILIARY ENERGY (MBTU)	SUP UNIT LOAD (MBTU)	SUP UNIT ENERGY (MBTU)	WASTE HEAT GENERATED (MBTU)	WASTE HEAT USE (MBTU)	DEFROST LOAD (MBTU)	INDOOR FAN ENERGY (MBTU)
JAN	503.	-45.309	63.041	0.192	0.000	0.000	0.000	0.000	0.000	4.487
FEB	439.	-39.493	55.190	0.187	0.000	0.000	0.000	0.000	0.000	4.072
MAR	337.	-30.343	43.695	0.325	0.000	0.000	0.000	0.000	0.000	4.487
APR	150.	-13.491	20.031	0.456	0.000	0.000	0.000	0.000	0.000	3.516
MAY	73.	-6.579	10.175	0.537	0.000	0.000	0.000	0.000	0.000	3.078
JUN	14.	-1.245	2.037	0.565	0.000	0.000	0.000	0.000	0.000	1.691
JUL	0.	-0.030	0.066	0.595	0.000	0.000	0.000	0.000	0.000	0.594
AUG	2.	-0.144	0.272	0.594	0.000	0.000	0.000	0.000	0.000	0.914
SEP	48.	-4.315	6.771	0.538	0.000	0.000	0.000	0.000	0.000	2.646
OCT	122.	-10.944	16.527	0.498	0.000	0.000	0.000	0.000	0.000	3.576
NOV	285.	-25.690	37.196	0.348	0.000	0.000	0.000	0.000	0.000	4.059
DEC	448.	-40.307	56.987	0.237	0.000	0.000	0.000	0.000	0.000	4.487
ANNUAL	2421.	-217.890	311.987	5.071	0.000	0.000	0.000	0.000	0.000	37.609

HSPF (WITH PARASITICS) = 0.72 (BTU/BTU)

HSPF (WITHOUT PARASITICS) = 0.70 (BTU/BTU)

TOTAL HOURS AT TEMPERATURE LEVEL AND TIME OF DAY

HOUR	1AM	2	3	4	5	6	7	8	9	10	11	12	1PM	2	3	4	5	6	7	8	9	10	11	12	TOTAL
ABOVE 85	0	0	0	0	0	0	0	0	0	0	0	0	0	0	0	0	0	0	0	0	0	0	0	0	0
80-85	0	0	0	0	0	0	0	0	0	0	0	0	0	0	0	0	0	0	0	0	0	0	0	0	0
75-80	84	54	43	37	34	41	45	60	89	105	124	151	160	164	166	167	165	163	156	140	136	129	122	98	2633
70-75	270	263	246	251	253	244	242	228	236	243	230	207	201	197	196	195	196	198	205	220	225	232	240	261	5479
65-70	8	10	11	10	11	13	11	10	7	12	6	4	2	3	3	3	4	3	3	4	3	3	2	4	150
60-65	3	4	3	4	4	4	4	5	5	4	4	3	2	1	0	0	0	1	1	1	1	1	1	2	58
BELOW 60	0	0	0	1	1	1	1	0	0	1	1	0	0	0	0	0	0	0	0	0	0	0	0	0	6

SMALL BAR/LOUGE CONVENTIONAL SYSTEM FOR COMPARISON DOE-2.1E-001 Thu Nov 11 09:03:47 1993PDL RUN 4
NEW FEATURES IN DOE2.1E RUN 4 SYSTEM 4: PKG PSZ WATER COOLED UNIT WITH WATER SIDE ECONOMIZER
REPORT- PS-B MONTHLY UTILITY AND FUEL USE SUMMARY WEATHER FILE- TRY CHICAGO

MONTH	BTU/UNIT:	ELECTRICITY METER-1 3413./KWH	NATURAL-GAS METER-1 100000./THERM
JAN			
ENERGY CONSUMPTION (UNITS/MO)		3030.9	715.9
PEAK DEMAND (UNITS/HR OR DAY)		5.9	1.5
	PEAK DAY/HR	30/19	8/14
FEB			
ENERGY CONSUMPTION (UNITS/MO)		2738.9	631.8
PEAK DEMAND (UNITS/HR OR DAY)		5.9	1.5
	PEAK DAY/HR	27/21	11/12
MAR			
ENERGY CONSUMPTION (UNITS/MO)		3089.8	527.0
PEAK DEMAND (UNITS/HR OR DAY)		6.0	1.5
	PEAK DAY/HR	2/19	24/13
APR			
ENERGY CONSUMPTION (UNITS/MO)		3086.0	284.8
PEAK DEMAND (UNITS/HR OR DAY)		8.0	1.0
	PEAK DAY/HR	28/20	9/ 6
MAY			
ENERGY CONSUMPTION (UNITS/MO)		3308.8	182.1
PEAK DEMAND (UNITS/HR OR DAY)		10.7	0.9
	PEAK DAY/HR	21/13	7/ 6
JUN			
ENERGY CONSUMPTION (UNITS/MO)		3723.2	95.1
PEAK DEMAND (UNITS/HR OR DAY)		14.0	0.5
	PEAK DAY/HR	20/18	1/ 6
JUL			
ENERGY CONSUMPTION (UNITS/MO)		5013.9	72.4
PEAK DEMAND (UNITS/HR OR DAY)		13.4	0.2
	PEAK DAY/HR	13/19	1/13
AUG			
ENERGY CONSUMPTION (UNITS/MO)		4442.3	72.9
PEAK DEMAND (UNITS/HR OR DAY)		12.5	0.3
	PEAK DAY/HR	15/18	5/ 6
SEP			
ENERGY CONSUMPTION (UNITS/MO)		3327.8	136.6
PEAK DEMAND (UNITS/HR OR DAY)		10.8	0.8
	PEAK DAY/HR	11/17	23/ 6
OCT			
ENERGY CONSUMPTION (UNITS/MO)		3155.1	239.0
PEAK DEMAND (UNITS/HR OR DAY)		8.5	1.0
	PEAK DAY/HR	30/19	2/ 8
NOV			
ENERGY CONSUMPTION (UNITS/MO)		2973.1	447.0
PEAK DEMAND (UNITS/HR OR DAY)		6.4	1.2
	PEAK DAY/HR	2/19	14/11
DEC			
ENERGY CONSUMPTION (UNITS/MO)		3023.5	651.9
PEAK DEMAND (UNITS/HR OR DAY)		5.8	1.3
	PEAK DAY/HR	13/19	25/11
TOTAL			
ENERGY CONSUMPTION (UNITS/YR)		40913.4	4056.4
PEAK DEMAND (UNITS/HR OR DAY)		14.0	1.5

ELECTRICAL LOADS	KWH SUPPLIED	PCT OF TOTAL LOAD
ELECTRICITY	40913.4	100.0
LOAD SATISFIED	40913.4	100.0
TOTAL LOAD ON PLANT	40912.7	

SUMMARY OF LOADS MET

TYPE OF LOAD	TOTAL LOAD (MBTU)	LOAD SATISFIED (MBTU)	TOTAL OVERLOAD (MBTU)	PEAK OVERLOAD (MBTU)	HOURS OVERLOADED
ELECTRICAL LOADS	139.6	139.6	0.000	0.000	0

ENERGY TYPE: UNITS: MBTU	ELECTRICITY	NATURAL-GAS
CATEGORY OF USE		
AREA LIGHTS	35.7	0.0
MISC EQUIPMT	16.9	0.0
SPACE HEAT	0.0	317.1
SPACE COOL	13.4	0.0
HEAT REJECT	14.3	0.0
PUMPS & MISC	6.1	0.0
VENT FANS	53.2	0.0
DOMHOT WATER	0.0	88.6
TOTAL	139.6	405.6

TOTAL SITE ENERGY 545.28 MBTU 252.4 KBTU/SQFT-YR GROSS-AREA 252.4 KBTU/SQFT-YR NET-AREA
TOTAL SOURCE ENERGY 824.61 MBTU 381.8 KBTU/SQFT-YR GROSS-AREA 381.8 KBTU/SQFT-YR NET-AREA

PERCENT OF HOURS ANY SYSTEM ZONE OUTSIDE OF THROTTLING RANGE = 2.6
PERCENT OF HOURS ANY PLANT LOAD NOT SATISFIED = 0.0

NOTE: ENERGY IS APPORTIONED HOURLY TO ALL END-USE CATEGORIES.

SMALL BAR/LOUGE
NEW FEATURES IN DOE2.1E RUN 4
REPORT- ES-D ENERGY COST SUMMARY

CONVENTIONAL SYSTEM FOR COMPARISON
SYSTEM 4: PKG PSZ WATER COOLED UNIT

DOE-2.1E-001 Thu Nov 11 09:03:47 1993EDL RUN 4
WITH WATER SIDE ECONOMIZER

UTILITY-RATE	RESOURCE	METERS	METERED ENERGY UNITS/YR	TOTAL CHARGE ($)	VIRTUAL RATE ($/UNIT)	RATE USED ALL YEAR?
ELEC-COST	ELECTRICITY	1 2 3 4 5	40913. KWH	3286.	0.0803	YES
GAS-COST	NATURAL-GAS	1 2 3 4 5	4056. THERM	2592.	0.6391	YES
				==========		
				5878.		

ENERGY COST/GROSS BLDG AREA: 2.72
ENERGY COST/NET BLDG AREA: 2.72

SMALL BAR/LOUGE CONVENTIONAL SYSTEM FOR COMPARISON DOE-2.1E-001 Thu Nov 11 09:03:47 1993EDL RUN 4
NEW FEATURES IN DOE2.1E RUN 4 SYSTEM 4: PKG PSZ WATER COOLED UNIT WITH WATER SIDE ECONOMIZER
REPORT- ES-E SUMMARY OF UTILITY-RATE: ELEC-COST

UTILITY-RATE: ELEC-COST
RESOURCE: ELECTRICITY
METERS: 1 2 3 4 5
POWER-FACTOR: 0.80
DEMAND-WINDOW: HOUR
BILLING-DAY: 31
EXCESS-KVAR-FRAC: 0.30
3413. BTU/KWH
RATE-LIMITATION: 0.0000
EXCESS-KVAR-CHG: 0.0000

RATE-QUALIFICATIONS

MIN-ENERGY:	0.0
MAX-ENERGY:	0.0
MIN-DEMAND:	0.0
MAX-DEMAND:	0.0
QUALIFY-RATE:	ALL-MONTHS
USE-MIN-QUAL:	NO

BLOCK-CHARGES
E-SM
E-WN

DEMAND-RATCHETS

MIN-MON-RATCHETS

MONTH	METERED ENERGY KWH	BILLING ENERGY KWH	METERED DEMAND KW	BILLING DEMAND KW	ENERGY CHARGE ($)	DEMAND CHARGE ($)	ENERGY CST ADJ ($)	TAXES ($)	SURCHRG ($)	FIXED CHARGE ($)	MINIMUM CHARGE ($)	VIRTUAL RATE ($/UNIT)	TOTAL CHARGE ($)
JAN	3031	3031	5.9	5.9	208	5	0	0	0	22	0	0.0775	235
FEB	2739	2739	5.9	5.9	193	5	0	0	0	22	0	0.0802	220
MAR	3090	3090	6.0	6.0	212	5	0	0	0	22	0	0.0771	238
APR	3086	3086	8.0	8.0	218	7	0	0	0	22	0	0.0799	246
MAY	3309	3309	10.7	10.7	251	9	0	0	0	22	0	0.0852	282
JUN	3723	3723	14.0	14.0	286	11	0	0	0	22	0	0.0857	319
JUL	5014	5014	13.4	13.4	350	11	0	0	0	22	0	0.0763	382
AUG	4442	4442	12.5	12.5	317	10	0	0	0	22	0	0.0785	349
SEP	3328	3328	10.8	10.8	253	9	0	0	0	22	0	0.0851	283
OCT	3155	3155	8.5	8.5	235	7	0	0	0	22	0	0.0835	264
NOV	2973	2973	6.4	6.4	207	5	0	0	0	22	0	0.0787	234
DEC	3024	3024	5.8	5.8	208	5	0	0	0	22	0	0.0774	234
TOTAL	40913	40913	14.0		2938	87	0	0	0	261		0.0803	3286

SMALL BAR/LOUGE
NEW FEATURES IN DOE2.1E RUN 4
REPORT- ES-E SUMMARY OF UTILITY-RATE: GAS-COST

CONVENTIONAL SYSTEM FOR COMPARISON
SYSTEM 4: PKG PSZ WATER COOLED UNIT

DOE-2.1E-001 Thu Nov 11 09:03:47 1993EDL RUN 4
WITH WATER SIDE ECONOMIZER

UTILITY-RATE: GAS-COST

RESOURCE: NATURAL-GAS
METERS: 1 2 3 4 5

DEMAND-WINDOW: HOUR
BILLING-DAY: 31

100000. BTU/THERM
RATE-LIMITATION: 0.0000

RATE-QUALIFICATIONS

MIN-ENERGY: 0.0
MAX-ENERGY: 0.0
MIN-DEMAND: 0.0
MAX-DEMAND: 0.0
QUALIFY-RATE: ALL-MONTHS
USE-MIN-QUAL: NO

BLOCK-CHARGES

GAS-CH

DEMAND-RATCHETS

MIN-MON-RATCHETS

MONTH	METERED ENERGY THERM	BILLING ENERGY THERM	METERED DEMAND THERMS	BILLING DEMAND THERMS	ENERGY CHARGE ($)	DEMAND CHARGE ($)	ENERGY CST ADJ ($)	TAXES ($)	SURCHRG ($)	FIXED CHARGE ($)	MINIMUM CHARGE ($)	VIRTUAL RATE ($/UNIT)	TOTAL CHARGE ($)
JAN	716	716	1.5	1.5	413	0	0	0	0	11	0	0.5924	424
FEB	632	632	1.5	1.5	372	0	0	0	0	11	0	0.6054	383
MAR	527	527	1.5	1.5	320	0	0	0	0	11	0	0.6275	331
APR	285	285	1.0	1.0	183	0	0	0	0	11	0	0.6807	194
MAY	182	182	0.9	0.9	117	0	0	0	0	11	0	0.7019	128
JUN	95	95	0.5	0.5	61	0	0	0	0	11	0	0.7558	72
JUL	72	72	0.2	0.2	47	0	0	0	0	11	0	0.7911	57
AUG	73	73	0.3	0.3	47	0	0	0	0	11	0	0.7903	58
SEP	137	137	0.8	0.8	88	0	0	0	0	11	0	0.7215	99
OCT	239	239	1.0	1.0	154	0	0	0	0	11	0	0.6879	164
NOV	447	447	1.2	1.2	280	0	0	0	0	11	0	0.6514	291
DEC	652	652	1.3	1.3	382	0	0	0	0	11	0	0.6020	392
TOTAL	4056	4056	1.5		2464	0	0	0	0	129		0.6391	2592

S D L P R O C E S S O R I N P U T D A T A

Thu Nov 11 09:03:47 1993SDL RUN 5

```
* 386 *
* 387 * TITLE  LINE-2 * CONVENTIONAL VS PVVT COMPARISON *
* 388 *        LINE-3 * NEW FEATURES IN DOE2.1E RUN 5 *
* 389 *        LINE-4 * SYSTEM 5: PKG PVVT GAS HEAT PUMP UNIT*
* 390 *        LINE-5 * EVAPORATIVE PRECOOLED CONDENSER *  ..
* 391 *
* 392 * SYSTEMS-REPORT   S (SS-A,SS-J,SS-N,SS-O)  ..
* 393 *
* 394 * FANSON  SCH THRU DEC 31 (MON,SAT) (1,24) (1)
* 395 *                          (SUN,HOL) (1,2) (1) (3,9)(0) (10,24)(1)  ..
* 396 * C-SETPT SCH THRU DEC 31 (ALL) (1,24) (76)  ..
* 397 * H-SETPT SCH THRU DEC 31 (ALL) (1,24) (72)  ..
* 398 * ENV  Z-C  D-H-T 72  D-C-T 74  H-T-SCH H-SETPT  C-T-SCH C-SETPT    ..
* 399 *
* 400 * BLDG Z  Z-C ENV  O-CFM/P 20  CFM/SQFT .7  ..
* 401 *
* 402 * SYS1  SYSTEM  S-TYPE=PVVT        OA-CONTROL=FIXED
* 403 *               SUPPLY-CFM=2500    HEATING-CAPACITY=-120000
* 404 *               MAX-SUPPLY-T=100   MIN-SUPPLY-T =55
* 405 *               SUPPLY-STATIC=2.5  SUPPLY-EFF=.47
* 406 *               F-SCH=FANSON       ZONE-NAMES (BLDG)
* 407 *               HEAT-SOURCE = GAS-HEAT-PUMP
* 408 *               ZONE-HEAT-SOURCE = GAS-HEAT-PUMP
* 409 *               CONDENSER-TYPE = EVAP-PRECOOLED
* 410 *               EVAP-PCC-SCH = SUMMER-ONLY
* 411 *               EVAP-PCC-EFF = .6
* 412 *               EVAP-PCC-ELEC = .01  ..
* 413 *
* 414 * WS-ECON  PLANT-ASSIGNMENT
* 415 *               SYSTEM-NAMES = (SYS1)
* 416 *               DHW-GAL/MIN  = .666
* 417 *               DHW-SCH      = DOMHW  ..
* 418 *
* 419 * D1 = D-SCH (1,7) (0)  (8,21) (.1,.2,.3,.4,.55,.6,.6,.45,.4,.45,.45,.4,.3,.3)
* 420 *                      (22,24) (0)  ..
* 421 * D2 = D-SCH (1,7) (0)  (8,22) (.15,.2,.25,.4,.5,.55,.55,.45,.45,.45,.45,.4,.35,
* 422 *                              .25,.2)  (23,24) (0)  ..
* 423 * D3 = D-SCH (1,9) (0)  (10,19) (.1,.25,.3,.35,.35,.3,.3,.35,.3,.2)
* 424 *                      (20,24) (0)  ..
* 425 * DOMHW = SCH THRU DEC 31 (WD) D1  (SAT) D2  (SUN,HOL) D3  ..
* 426 *
* 427 * SUMMER-ONLY = SCHEDULE THRU JUN 1 (ALL) (1,24)(0)
* 428 *                        THRU OCT 1 (ALL) (1,24)(1)
* 429 *                        THRU DEC 31 (ALL) (1,24)(0)  ..
* 430 * END  ..
* 431 * COMPUTE SYSTEMS  ..
* 432 * INPUT PLANT  ..
```

P D L P R O C E S S O R I N P U T D A T A

Thu Nov 11 09:03:47 1993PDL RUN 5

```
* 433 *
* 434 * WS-ECON  PLANT-ASSIGNMENT   ..
* 435 * PLANT-REPORT   S (BEPS)  ..
* 436 * END  ..
* 437 * COMPUTE PLANT  ..
* 438 * INPUT ECONOMICS  ..
```

```
* 439 *
* 440 * ECONOMICS-REPORT  S (ES-D,ES-E)  ..
* 441 *
* 442 * ELEC-COST = UTILITY-RATE  RESOURCE = ELECTRICITY
* 443 *                          MONTH-CHGS = (21.75)
* 444 *                          DEMAND-CHGS = (.81)
* 445 *                          BLOCK-CHARGES = (E-SM,E-WN)  ..
* 446 *
* 447 * E-SM      = BLOCK-CHARGE  BLOCK-SCH   = SEASON
* 448 *                          SCH-FLAG    = 2
* 449 *                          BLOCK1-TYPE = ENERGY
* 450 *                          BLOCK1-DATA = (1250,.0829)
* 451 *                          BLOCK2-TYPE = KWH/KW
* 452 *                          BLOCK2-DATA = (125,.0829,0
* 453 *                                           1,.0514,0)  ..
* 454 *
* 455 * E-WN      = BLOCK-CHARGE  BLOCK-SCH   = SEASON
* 456 *                          SCH-FLAG    = 1
* 457 *                          BLOCK1-TYPE = ENERGY
* 458 *                          BLOCK1-DATA = (1250,.0778)
* 459 *                          BLOCK2-TYPE = KWH/KW
* 460 *                          BLOCK2-DATA = (125,.0778,0
* 461 *                                           1,.0514,0)  ..
* 462 *
* 463 * SEASON    = SCHEDULE THRU APR 30 (ALL) (1,24)(1)
* 464 *                     THRU OCT 31 (ALL) (1,24)(2)
* 465 *                     THRU DEC 31 (ALL) (1,24)(1)  ..
* 466 *
* 467 * GAS-COST  = UTILITY-RATE  RESOURCE = NATURAL-GAS
* 468 *                          MONTH-CHGS = (10.73)
* 469 *                          BLOCK-CHARGES = (GAS-CH)  ..
* 470 *
* 471 * GAS-CH    = BLOCK-CHARGE  BLOCK1-TYPE = ENERGY
* 472 *                          BLOCK1-DATA = (400,.643
* 473 *                                           1,.4943)  ..
* 474 *
* 475 * END  ..
* 476 * COMPUTE ECONOMICS  ..
* 477 * STOP  ..
```

SMALL BAR/LOUGE
NEW FEATURES IN DOE2.1E RUN 5
REPORT- SV-A SYSTEM DESIGN PARAMETERS

CONVENTIONAL VS PVVT COMPARISON
SYSTEM 5: PKG PVVT GAS HEAT PUMP UNIT
SYS1

DOE-2.1E-001 Thu Nov 11 09:03:47 1993SDL RUN 5
EVAPORATIVE PRECOOLED CONDENSER
WEATHER FILE- TRY CHICAGO

SYSTEM NAME	SYSTEM TYPE	ALTITUDE MULTIPLIER	FLOOR AREA (SQFT)	MAX PEOPLE
SYS1	PVVT	1.020	2160.0	48.

SUPPLY FAN (CFM)	ELEC (KW)	DELTA-T (F)	RETURN FAN (CFM)	ELEC (KW)	DELTA-T (F)	OUTSIDE AIR RATIO	COOLING CAPACITY (KBTU/HR)	SENSIBLE (SHR)	HEATING CAPACITY (KBTU/HR)	COOLING EIR (BTU/BTU)	HEATING EIR (BTU/BTU)	HEAT PUMP SUPP-HEAT (KBTU/HR)
2550.	1.561	1.9	0.	0.000	0.0	0.384	70.995	0.951	-120.000	1.15	0.68	-140.629

ZONE NAME	SUPPLY FLOW (CFM)	EXHAUST FLOW (CFM)	FAN (KW)	MINIMUM FLOW RATIO	OUTSIDE AIR FLOW (CFM)	COOLING CAPACITY (KBTU/HR)	SENSIBLE (SHR)	EXTRACTION RATE (KBTU/HR)	HEATING CAPACITY (KBTU/HR)	ADDITION RATE (KBTU/HR)	MULTIPLIER
BLDG	2550.	0.	0.000	0.724	979.	0.00	0.00	52.33	0.00	-58.87	1.0

SMALL BAR/LOUGE — CONVENTIONAL VS PVVT COMPARISON — DOE-2.1E-001 Thu Nov 11 09:03:47 1993SDL RUN 5
NEW FEATURES IN DOE2.1E RUN 5 — SYSTEM 5: PKG PVVT GAS HEAT PUMP UNIT — EVAPORATIVE PRECOOLED CONDENSER
REPORT- SS-P LOAD, ENERGY AND PART LOAD DHW TANK OPERATION FOR WS-ECON — WEATHER FILE- TRY CHICAGO

TANK SIZE is 30.0 (GAL) HEATER CAP = 25.774 (KBTU/HR) FLOW RATE = 0.666 (GAL/MIN) PUMP = 0.000 (KW)

MONTH	SUM PEAK	UNIT LOAD (MBTU) (KBTU/HR)	ENERGY USE (MBTU) (KBTU/HR)	RCV EN USE (MBTU) (KBTU/HR)	PUMP ENERGY (KWH) (KW)	Number of hours within each PART LOAD range 00 10	10 20	20 30	30 40	40 50	50 60	60 70	70 80	80 90	90 100	100 +	TOTAL RUN HOURS
JAN	SUM	5.160	2.680	4.175	0.000	564	47	46	40	23	18	4	2	0	0	0	744
	PEAK	19.998	27.532	18.459	0.000												
	DAY/HR	29/14	25/14	8/12	31/24												
FEB	SUM	4.837	2.758	3.714	0.000	491	38	46	39	30	18	6	4	0	0	0	672
	PEAK	20.598	27.215	18.567	0.000												
	DAY/HR	26/14	17/13	5/12	28/24												
MAR	SUM	5.390	4.828	2.830	0.000	437	45	57	74	51	47	22	8	3	0	0	744
	PEAK	20.198	29.131	18.038	0.000												
	DAY/HR	31/14	3/13	24/14	31/24												
APR	SUM	4.947	6.129	1.371	0.000	360	36	49	81	62	75	26	31	0	0	0	720
	PEAK	19.198	27.712	11.336	0.000												
	DAY/HR	30/14	2/14	8/11	30/ 1												
MAY	SUM	4.592	6.112	1.021	0.000	365	48	63	82	75	58	31	22	0	0	0	744
	PEAK	17.799	25.850	18.111	0.000												
	DAY/HR	28/14	18/13	21/13	31/ 1												
JUN	SUM	4.225	4.599	1.699	0.000	378	76	86	73	77	10	20	0	0	0	0	720
	PEAK	16.399	23.753	12.915	0.000												
	DAY/HR	30/14	24/14	21/18	30/ 1												
JUL	SUM	3.990	2.190	3.231	0.000	564	90	55	25	6	4	0	0	0	0	0	744
	PEAK	15.199	20.336	15.769	0.000												
	DAY/HR	30/14	22/12	19/14	31/ 1												
AUG	SUM	3.882	3.004	2.513	0.000	475	124	80	49	13	3	0	0	0	0	0	744
	PEAK	14.799	21.499	15.354	0.000												
	DAY/HR	31/14	4/14	26/13	31/ 1												
SEP	SUM	3.848	4.753	1.176	0.000	383	60	75	79	74	34	15	0	0	0	0	720
	PEAK	15.199	22.192	12.431	0.000												
	DAY/HR	30/14	13/14	11/13	30/ 1												
OCT	SUM	4.179	5.361	1.115	0.000	381	47	71	101	86	39	19	0	0	0	0	744
	PEAK	16.199	23.583	8.476	0.000												
	DAY/HR	29/14	29/13	21/10	31/24												
NOV	SUM	4.376	3.894	2.401	0.000	443	61	67	64	46	29	7	3	0	0	0	720
	PEAK	17.599	25.435	12.393	0.000												
	DAY/HR	30/14	9/14	26/11	30/24												
DEC	SUM	4.898	2.701	3.870	0.000	546	66	56	39	24	10	3	0	0	0	0	744
	PEAK	18.998	24.106	18.128	0.000												
	DAY/HR	30/14	10/14	25/13	31/24												
YR	SUM	54.324	49.006	29.116	0.000	5387	738	751	746	567	345	153	70	3	0	0	8760
	PEAK	20.598	29.131	18.567	0.000												
	MON/DAY	2/26	3/ 3	2/ 5	12/31												

SMALL BAR/LOUGE CONVENTIONAL VS PVVT COMPARISON DOE-2.1E-001 Thu Nov 11 09:03:47 1993SDL RUN 5
NEW FEATURES IN DOE2.1E RUN 5 SYSTEM 5: PKG PVVT GAS HEAT PUMP UNIT EVAPORATIVE PRECOOLED CONDENSER
REPORT- SS-A SYSTEM MONTHLY LOADS SUMMARY FOR SYS1 WEATHER FILE- TRY CHICAGO

	COOLING						HEATING						ELEC	
MONTH	COOLING ENERGY (MBTU)	TIME OF MAX DY	TIME OF MAX HR	DRY-BULB TEMP	WET-BULB TEMP	MAXIMUM COOLING LOAD (KBTU/HR)	HEATING ENERGY (MBTU)	TIME OF MAX DY	TIME OF MAX HR	DRY-BULB TEMP	WET-BULB TEMP	MAXIMUM HEATING LOAD (KBTU/HR)	ELEC-TRICAL ENERGY (KWH)	MAXIMUM ELEC LOAD (KW)
JAN	0.00000					0.000	-50.075	1	10	0.F	0.F	-143.692	2260.	4.776
FEB	0.00000					0.000	-42.753	9	6	2.F	2.F	-119.511	2035.	4.760
MAR	0.07690	3	17	78.F	61.F	20.507	-33.224	24	7	6.F	5.F	-116.309	2213.	4.761
APR	1.43384	27	18	85.F	62.F	37.856	-15.428	9	6	26.F	25.F	-77.908	2026.	4.744
MAY	2.94594	21	13	87.F	76.F	86.838	-8.219	7	6	33.F	29.F	-63.805	2020.	4.744
JUN	10.82261	20	18	91.F	78.F	114.659	-1.877	1	6	48.F	47.F	-32.892	2119.	5.842
JUL	25.55632	13	17	97.F	78.F	107.632	-0.164	6	6	61.F	55.F	-9.658	2462.	5.710
AUG	18.50516	26	18	93.F	75.F	86.287	-0.390	5	6	55.F	54.F	-19.542	2321.	5.520
SEP	5.11988	11	17	86.F	72.F	69.586	-5.586	23	6	36.F	33.F	-59.327	2017.	5.454
OCT	1.32972	30	19	73.F	67.F	29.656	-12.910	21	6	30.F	29.F	-71.804	2046.	4.683
NOV	0.47445	2	13	74.F	61.F	35.694	-28.141	14	10	29.F	28.F	-89.584	2093.	4.744
DEC	0.00000					0.000	-43.341	9	6	14.F	13.F	-104.890	2252.	4.755
TOTAL	66.265						-242.109						25864.	
MAX						114.659						-143.692		5.842

	-----COOLING-----				---HEATING---			DAY COOLING PEAK			
	JUN 20				JAN 1			JUL 13			
HOUR	HOURLY COOLING LOAD (KBTU)	SENSIBLE HEAT RATIO	DRY-BULB TEMP	WET-BULB TEMP	HOURLY HEATING LOAD (KBTU)	DRY-BULB TEMP	WET-BULB TEMP	HOURLY COOLING LOAD (KBTU)	SENSIBLE HEAT RATIO	DRY-BULB TEMP	WET-BULB TEMP
1	13.915	0.663	68.F	64.F	-110.975	8.F	7.F	26.585	0.744	76.F	66.F
2	0.000	0.000	68.F	64.F	-110.809	7.F	6.F	17.450	0.720	74.F	66.F
3	0.000	0.000	66.F	62.F	0.000	6.F	5.F	15.116	0.745	74.F	65.F
4	0.000	0.000	66.F	62.F	0.000	3.F	2.F	10.486	0.853	73.F	62.F
5	0.000	0.000	65.F	62.F	0.000	1.F	0.F	7.632	0.842	72.F	62.F
6	0.000	0.000	65.F	62.F	0.000	0.F	0.F	14.506	0.772	72.F	63.F
7	0.000	0.000	67.F	64.F	0.000	-1.F	-1.F	19.943	0.721	73.F	65.F
8	0.000	0.000	73.F	65.F	0.000	-1.F	-1.F	31.431	0.648	76.F	69.F
9	24.875	0.736	76.F	67.F	0.000	-2.F	-2.F	49.792	0.633	82.F	72.F
10	49.019	0.641	80.F	71.F	-143.692	0.F	0.F	65.739	0.631	86.F	74.F
11	65.236	0.652	83.F	72.F	-130.874	2.F	1.F	81.455	0.617	89.F	76.F
12	78.612	0.623	84.F	74.F	-117.303	3.F	2.F	100.345	0.601	93.F	78.F
13	81.535	0.630	85.F	74.F	-104.201	5.F	3.F	95.015	0.633	95.F	78.F
14	93.697	0.629	88.F	75.F	-96.482	6.F	4.F	93.789	0.671	96.F	77.F
15	108.278	0.598	90.F	77.F	-90.800	7.F	5.F	95.257	0.685	97.F	77.F
16	109.581	0.575	90.F	78.F	-92.740	7.F	5.F	107.632	0.641	97.F	78.F
17	114.659	0.573	91.F	78.F	-103.261	5.F	3.F	106.879	0.671	99.F	77.F
18	104.950	0.589	90.F	77.F	-108.474	1.F	0.F	98.872	0.695	97.F	76.F
19	93.289	0.564	89.F	78.F	-112.132	0.F	0.F	90.725	0.705	95.F	75.F
20	70.070	0.530	79.F	74.F	-118.888	-1.F	-2.F	89.307	0.677	93.F	75.F
21	37.700	0.604	70.F	67.F	-119.408	-1.F	-2.F	82.660	0.668	90.F	74.F
22	29.279	0.627	69.F	66.F	-119.480	0.F	0.F	74.883	0.662	87.F	73.F
23	26.539	0.663	70.F	65.F	-120.463	-1.F	-1.F	69.148	0.652	86.F	73.F
24	22.008	0.723	71.F	64.F	-119.998	0.F	0.F	56.540	0.644	85.F	73.F
SUM								1501.184			
MAX	114.659				-143.692						

SYSTEM-TYPE	PVVT	SQFT/TON	226.1
COOLING PEAK	53.08 (BTU/HR- SQFT)	HEATING PEAK	-66.52 (BTU/HR- SQFT)
SUPPLY AIR PEAK FLOW	1.18 (CFM/SQFT)	MIN-OA/PERSON	20.40 (CFM)
OA FRAC AT CLG PEAK	0.435	OA FRAC AT HTG PEAK	0.530

* ASTERISKS INDICATE HOURS LOADS NOT MET

TOTAL HOURS AT RELATIVE HUMIDITY LEVEL AND TIME OF DAY

HOUR	1AM	2	3	4	5	6	7	8	9	10	11	12	1PM	2	3	4	5	6	7	8	9	10	11	12	TOTAL
80-100	0	0	0	0	0	0	0	0	0	0	0	0	0	0	0	0	0	0	0	0	0	0	0	0	0
70-80	2	3	3	4	5	11	8	2	2	1	1	1	0	0	0	1	2	2	2	3	4	5	4	2	68
60-70	44	29	32	31	33	41	43	36	33	29	21	20	7	3	4	10	21	16	22	32	41	47	45	44	684
50-60	58	46	38	37	36	40	41	47	61	64	69	80	56	58	55	73	82	75	74	77	74	76	68	58	1443
40-50	44	36	34	33	32	29	31	37	47	57	62	68	89	89	88	78	70	82	64	57	62	55	54	41	1339
30-40	51	46	42	43	39	36	52	50	46	48	49	55	74	55	60	56	73	79	77	82	91	94	94	85	1477
0-30	166	171	154	155	158	146	128	131	148	166	163	141	139	160	158	147	117	111	126	114	93	88	100	135	3315

	UNIT RUN TIME (HOURS)	TOTAL LOAD ON UNIT (MBTU)	ENERGY IN TO UNIT (MBTU)	AUXILIARY ENERGY (MBTU)	SUP UNIT LOAD (MBTU)	SUP UNIT ENERGY (MBTU)	WASTE HEAT GENERATED (MBTU)	WASTE HEAT USE (MBTU)		INDOOR FAN ENERGY (MBTU)
JAN	0.	0.000	0.000	0.002	0.000	0.000	0.000	0.000	0.000	0.000
FEB	0.	0.000	0.000	0.001	0.000	0.000	0.000	0.000	0.000	0.000
MAR	2.	0.077	0.061	0.005	0.000	0.000	-0.015	0.000	0.000	0.023
APR	33.	1.434	1.090	0.066	0.000	0.000	-0.273	0.000	0.000	0.292
MAY	63.	2.938	2.089	0.122	0.008	0.000	-0.522	0.000	0.000	0.474
JUN	222.	10.690	7.670	0.815	0.132	0.000	-1.920	0.000	0.000	1.225
JUL	456.	25.262	18.932	1.839	0.294	0.000	-4.733	0.000	0.000	1.800
AUG	363.	18.495	13.294	1.390	0.010	0.000	-3.324	0.000	0.000	1.641
SEP	109.	5.120	3.653	0.396	0.000	0.000	-0.913	0.000	0.000	0.720
OCT	31.	1.330	0.990	0.063	0.000	0.000	-0.248	0.000	0.000	0.330
NOV	11.	0.474	0.365	0.023	0.000	0.000	-0.091	0.000	0.000	0.095
DEC	0.	0.000	0.000	0.002	0.000	0.000	0.000	0.000	0.000	0.000
ANNUAL	1289.	65.821	48.152	4.724	0.444	0.000	-12.038	0.000	0.000	6.601

CSPF (WITH PARASITICS) = 1.11 (BTU/BTU)

CSPF (WITHOUT PARASITICS) = 1.38 (BTU/BTU)

	UNIT RUN TIME (HOURS)	TOTAL LOAD ON UNIT (MBTU)	ENERGY IN TO UNIT (MBTU)	AUXILIARY ENERGY (MBTU)	SUP UNIT LOAD (MBTU)	SUP UNIT ENERGY (MBTU)	WASTE HEAT GENERATED (MBTU)	WASTE HEAT USE (MBTU)	DEFROST LOAD (MBTU)	INDOOR FAN ENERGY (MBTU)
JAN	661.	-44.591	35.930	1.214	-6.556	9.471	-8.982	0.000	-1.071	2.030
FEB	587.	-41.006	32.679	1.073	-2.684	4.094	-8.170	0.000	-0.937	1.842
MAR	537.	-33.086	22.624	0.995	-0.909	1.379	-5.656	0.000	-0.771	2.047
APR	261.	-15.718	9.708	0.506	0.000	0.000	-2.427	0.000	-0.290	1.709
MAY	131.	-8.254	4.684	0.277	0.000	0.000	-1.171	0.000	-0.035	1.556
JUN	27.	-1.877	0.983	0.070	0.000	0.000	-0.246	0.000	0.000	0.781
JUL	2.	-0.164	0.079	0.011	0.000	0.000	-0.020	0.000	0.000	0.263
AUG	5.	-0.390	0.193	0.021	0.000	0.000	-0.048	0.000	0.000	0.411
SEP	87.	-5.615	3.118	0.190	0.000	0.000	-0.780	0.000	-0.029	1.261
OCT	212.	-13.048	7.749	0.424	0.000	0.000	-1.937	0.000	-0.138	1.700
NOV	467.	-28.766	18.971	0.867	0.000	0.000	-4.743	0.000	-0.625	1.865
DEC	672.	-43.802	31.763	1.219	-0.731	1.183	-7.941	0.000	-1.193	2.030
ANNUAL	3649.	-236.317	168.481	6.866	-10.880	16.127	-42.120	0.000	-5.090	17.492

HSPF (WITH PARASITICS) = 1.24 (BTU/BTU)

HSPF (WITHOUT PARASITICS) = 1.31 (BTU/BTU)

TOTAL HOURS AT TEMPERATURE LEVEL AND TIME OF DAY

HOUR	1AM	2	3	4	5	6	7	8	9	10	11	12	1PM	2	3	4	5	6	7	8	9	10	11	12	TOTAL
ABOVE 85	0	0	0	0	0	0	0	0	0	0	0	0	0	0	0	0	0	0	0	0	0	0	0	0	0
80-85	0	0	0	0	0	0	0	0	0	0	0	0	0	0	0	0	0	0	0	0	0	0	0	0	0
75-80	75	42	35	29	25	35	37	48	82	93	118	136	144	153	154	155	155	153	137	128	120	116	106	82	2358
70-75	290	289	268	274	278	268	266	255	255	272	247	229	221	212	211	210	210	212	228	237	245	249	259	283	5968
65-70	0	0	0	0	0	0	0	0	0	0	0	0	0	0	0	0	0	0	0	0	0	0	0	0	0
60-65	0	0	0	0	0	0	0	0	0	0	0	0	0	0	0	0	0	0	0	0	0	0	0	0	0
BELOW 60	0	0	0	0	0	0	0	0	0	0	0	0	0	0	0	0	0	0	0	0	0	0	0	0	0

MONTH	ELECTRICITY METER-1 BTU/UNIT: 3413./KWH	NATURAL-GAS METER-1 100000./THERM
JAN		
ENERGY CONSUMPTION (UNITS/MO)	2259.6	480.8
PEAK DEMAND (UNITS/HR OR DAY)	4.8	1.7
PEAK DAY/HR	12/20	1/10
FEB		
ENERGY CONSUMPTION (UNITS/MO)	2034.7	395.3
PEAK DEMAND (UNITS/HR OR DAY)	4.8	1.4
PEAK DAY/HR	3/24	9/ 6
MAR		
ENERGY CONSUMPTION (UNITS/MO)	2213.3	288.9
PEAK DEMAND (UNITS/HR OR DAY)	4.8	1.4
PEAK DAY/HR	24/24	24/ 7
APR		
ENERGY CONSUMPTION (UNITS/MO)	2025.6	169.3
PEAK DEMAND (UNITS/HR OR DAY)	4.7	0.7
PEAK DAY/HR	8/20	9/ 6
MAY		
ENERGY CONSUMPTION (UNITS/MO)	2020.3	128.9
PEAK DEMAND (UNITS/HR OR DAY)	4.7	0.7
PEAK DAY/HR	16/19	21/13
JUN		
ENERGY CONSUMPTION (UNITS/MO)	2118.6	132.6
PEAK DEMAND (UNITS/HR OR DAY)	5.8	0.7
PEAK DAY/HR	20/18	20/15
JUL		
ENERGY CONSUMPTION (UNITS/MO)	2462.5	212.0
PEAK DEMAND (UNITS/HR OR DAY)	5.7	0.8
PEAK DAY/HR	13/19	9/18
AUG		
ENERGY CONSUMPTION (UNITS/MO)	2321.4	164.9
PEAK DEMAND (UNITS/HR OR DAY)	5.5	0.7
PEAK DAY/HR	15/18	15/16
SEP		
ENERGY CONSUMPTION (UNITS/MO)	2016.6	115.2
PEAK DEMAND (UNITS/HR OR DAY)	5.5	0.6
PEAK DAY/HR	10/19	11/17
OCT		
ENERGY CONSUMPTION (UNITS/MO)	2046.1	141.0
PEAK DEMAND (UNITS/HR OR DAY)	4.7	0.6
PEAK DAY/HR	20/23	21/ 6
NOV		
ENERGY CONSUMPTION (UNITS/MO)	2092.7	232.3
PEAK DEMAND (UNITS/HR OR DAY)	4.7	0.8
PEAK DAY/HR	12/21	14/10
DEC		
ENERGY CONSUMPTION (UNITS/MO)	2252.1	356.5
PEAK DEMAND (UNITS/HR OR DAY)	4.8	1.2
PEAK DAY/HR	25/24	22/ 6
TOTAL		
ENERGY CONSUMPTION (UNITS/YR)	25863.5	2817.7
PEAK DEMAND (UNITS/HR OR DAY)	5.8	1.7

ELECTRICAL LOADS	KWH SUPPLIED	PCT OF TOTAL LOAD
ELECTRICITY	25863.5	100.0
LOAD SATISFIED	25863.5	100.0
TOTAL LOAD ON PLANT	25863.5	

SUMMARY OF LOADS MET

TYPE OF LOAD	TOTAL LOAD (MBTU)	LOAD SATISFIED (MBTU)	TOTAL OVERLOAD (MBTU)	PEAK OVERLOAD (MBTU)	HOURS OVERLOADED
ELECTRICAL LOADS	88.3	88.3	0.000	0.000	0

ENERGY TYPE:	ELECTRICITY	NATURAL-GAS
UNITS: MBTU		
CATEGORY OF USE		
AREA LIGHTS	35.7	0.0
MISC EQUIPMT	16.9	0.0
SPACE HEAT	0.0	168.5
SPACE COOL	0.0	48.2
HEAT REJECT	8.3	0.0
PUMPS & MISC	3.3	0.0
VENT FANS	24.1	0.0
SUPPLMT HEAT	0.0	16.1
DOMHOT WATER	0.0	49.0
TOTAL	88.3	281.8

TOTAL SITE ENERGY	370.04 MBTU	171.3 KBTU/SQFT-YR GROSS-AREA	171.3 KBTU/SQFT-YR NET-AREA
TOTAL SOURCE ENERGY	546.61 MBTU	253.1 KBTU/SQFT-YR GROSS-AREA	253.1 KBTU/SQFT-YR NET-AREA

PERCENT OF HOURS ANY SYSTEM ZONE OUTSIDE OF THROTTLING RANGE = 0.0
PERCENT OF HOURS ANY PLANT LOAD NOT SATISFIED = 0.0

NOTE: ENERGY IS APPORTIONED HOURLY TO ALL END-USE CATEGORIES.

SHALL BAR/LOUGE
NEW FEATURES IN DOE2.1E RUN 5
REPORT- ES-D ENERGY COST SUMMARY

CONVENTIONAL VS PVVT COMPARISON
SYSTEM 5: PKG PVVT GAS HEAT PUMP UNIT

DOE-2.1E-001 Thu Nov 11 09:03:47 1993EDL RUN 5
EVAPORATIVE PRECOOLED CONDENSER

UTILITY-RATE	RESOURCE	METERS	METERED ENERGY UNITS/YR	TOTAL CHARGE ($)	VIRTUAL RATE ($/UNIT)	RATE USED ALL YEAR?
ELEC-COST	ELECTRICITY	1 2 3 4 5	25863. KWH	2294.	0.0887	YES
GAS-COST	NATURAL-GAS	1 2 3 4 5	2818. THERM	1929.	0.6844	YES
				==========		
				4222.		

ENERGY COST/GROSS BLDG AREA: 1.95
ENERGY COST/NET BLDG AREA: 1.95

SMALL BAR/LOUGE CONVENTIONAL VS PVVT COMPARISON DOE-2.1E-001 Thu Nov 11 09:03:47 1993EDL RUN 5
NEW FEATURES IN DOE2.1E RUN 5 SYSTEM 5: PKG PVVT GAS HEAT PUMP UNIT EVAPORATIVE PRECOOLED CONDENSER
REPORT- ES-E SUMMARY OF UTILITY-RATE: ELEC-COST

UTILITY-RATE: ELEC-COST RESOURCE: ELECTRICITY DEMAND-WINDOW: HOUR 3413. BTU/KWH
METERS: 1 2 3 4 5 BILLING-DAY: 31 RATE-LIMITATION: 0.0000
POWER-FACTOR: 0.80 EXCESS-KVAR-FRAC: 0.30 EXCESS-KVAR-CHG: 0.0000

RATE-QUALIFICATIONS		BLOCK-CHARGES	DEMAND-RATCHETS	MIN-MON-RATCHETS
MIN-ENERGY:	0.0	E-SM		
MAX-ENERGY:	0.0	E-WN		
MIN-DEMAND:	0.0			
MAX-DEMAND:	0.0			
QUALIFY-RATE:	ALL-MONTHS			
USE-MIN-QUAL:	NO			

MONTH	METERED ENERGY KWH	BILLING ENERGY KWH	METERED DEMAND KW	BILLING DEMAND KW	ENERGY CHARGE ($)	DEMAND CHARGE ($)	ENERGY CST ADJ ($)	TAXES ($)	SURCHRG ($)	FIXED CHARGE ($)	MINIMUM CHARGE ($)	VIRTUAL RATE ($/UNIT)	TOTAL CHARGE ($)
JAN	2260	2260	4.8	4.8	165	4	0	0	0	22	0	0.0843	191
FEB	2035	2035	4.8	4.8	153	4	0	0	0	22	0	0.0879	179
MAR	2213	2213	4.8	4.8	162	4	0	0	0	22	0	0.0850	188
APR	2026	2026	4.7	4.7	153	4	0	0	0	22	0	0.0881	178
MAY	2020	2020	4.7	4.7	162	4	0	0	0	22	0	0.0928	187
JUN	2119	2119	5.8	5.8	171	5	0	0	0	22	0	0.0933	198
JUL	2462	2462	5.7	5.7	188	5	0	0	0	22	0	0.0872	215
AUG	2321	2321	5.5	5.5	180	4	0	0	0	22	0	0.0890	207
SEP	2017	2017	5.5	5.5	165	4	0	0	0	22	0	0.0946	191
OCT	2046	2046	4.7	4.7	163	4	0	0	0	22	0	0.0921	189
NOV	2093	2093	4.7	4.7	156	4	0	0	0	22	0	0.0869	182
DEC	2252	2252	4.8	4.8	164	4	0	0	0	22	0	0.0844	190
TOTAL	25863	25863	5.8		1984	49	0	0	0	261		0.0887	2294

SMALL BAR/LOUGE CONVENTIONAL VS PVVT COMPARISON DOE-2.1E-001 Thu Nov 11 09:03:47 1993EDL RUN 5
NEW FEATURES IN DOE2.1E RUN 5 SYSTEM 5: PKG PVVT GAS HEAT PUMP UNIT EVAPORATIVE PRECOOLED CONDENSER
REPORT- ES-E SUMMARY OF UTILITY-RATE: GAS-COST

UTILITY-RATE: GAS-COST
RESOURCE: NATURAL-GAS
METERS: 1 2 3 4 5
DEMAND-WINDOW: HOUR
BILLING-DAY: 31
100000. BTU/THERM
RATE-LIMITATION: 0.0000

RATE-QUALIFICATIONS

MIN-ENERGY:	0.0
MAX-ENERGY:	0.0
MIN-DEMAND:	0.0
MAX-DEMAND:	0.0
QUALIFY-RATE:	ALL-MONTHS
USE-MIN-QUAL:	NO

BLOCK-CHARGES: GAS-CH

DEMAND-RATCHETS

MIN-MON-RATCHETS

MONTH	METERED ENERGY THERM	BILLING ENERGY THERM	METERED DEMAND THERMS	BILLING DEMAND THERMS	ENERGY CHARGE ($)	DEMAND CHARGE ($)	ENERGY CST ADJ ($)	TAXES ($)	SURCHRG ($)	FIXED CHARGE ($)	MINIMUM CHARGE ($)	VIRTUAL RATE ($/UNIT)	TOTAL CHARGE ($)
JAN	481	481	1.7	1.7	297	0	0	0	0	11	0	0.6403	308
FEB	395	395	1.4	1.4	254	0	0	0	0	11	0	0.6701	265
MAR	289	289	1.4	1.4	186	0	0	0	0	11	0	0.6801	196
APR	169	169	0.7	0.7	109	0	0	0	0	11	0	0.7064	120
MAY	129	129	0.7	0.7	83	0	0	0	0	11	0	0.7263	94
JUN	133	133	0.7	0.7	85	0	0	0	0	11	0	0.7239	96
JUL	212	212	0.8	0.8	136	0	0	0	0	11	0	0.6936	147
AUG	165	165	0.7	0.7	106	0	0	0	0	11	0	0.7081	117
SEP	115	115	0.6	0.6	74	0	0	0	0	11	0	0.7361	85
OCT	141	141	0.6	0.6	91	0	0	0	0	11	0	0.7191	101
NOV	232	232	0.8	0.8	149	0	0	0	0	11	0	0.6892	160
DEC	356	356	1.2	1.2	229	0	0	0	0	11	0	0.6731	240
TOTAL	2818	2818	1.7		1800	0	0	0	0	129		0.6844	1929

Single Family Residence

Elevation views and floor plan.

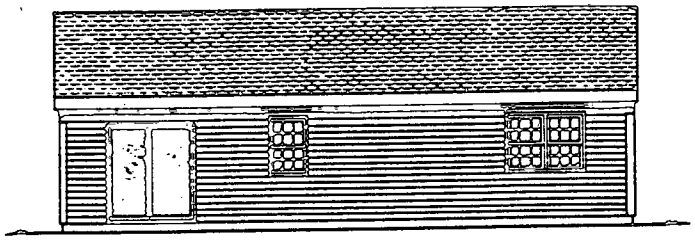

REAR ELEVATION OF RANCH HOUSE

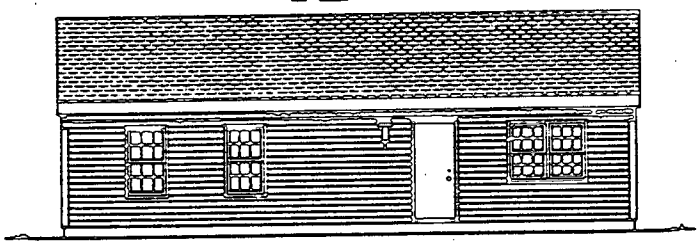

FRONT ELEVATION OF RANCH HOUSE

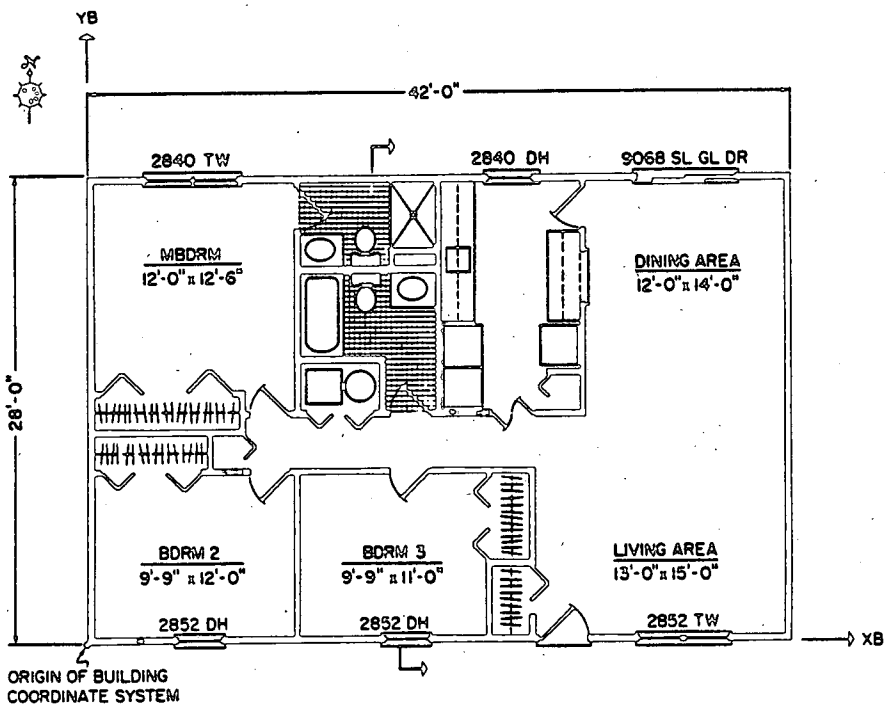

FLOOR PLAN OF RANCH HOUSE

Single Family Residence

Floor plan. The house is modeled as two zones divided by an interior wall shown as the dashed line A–A in the floor plan. The other interior walls have not been explicitly modeled.

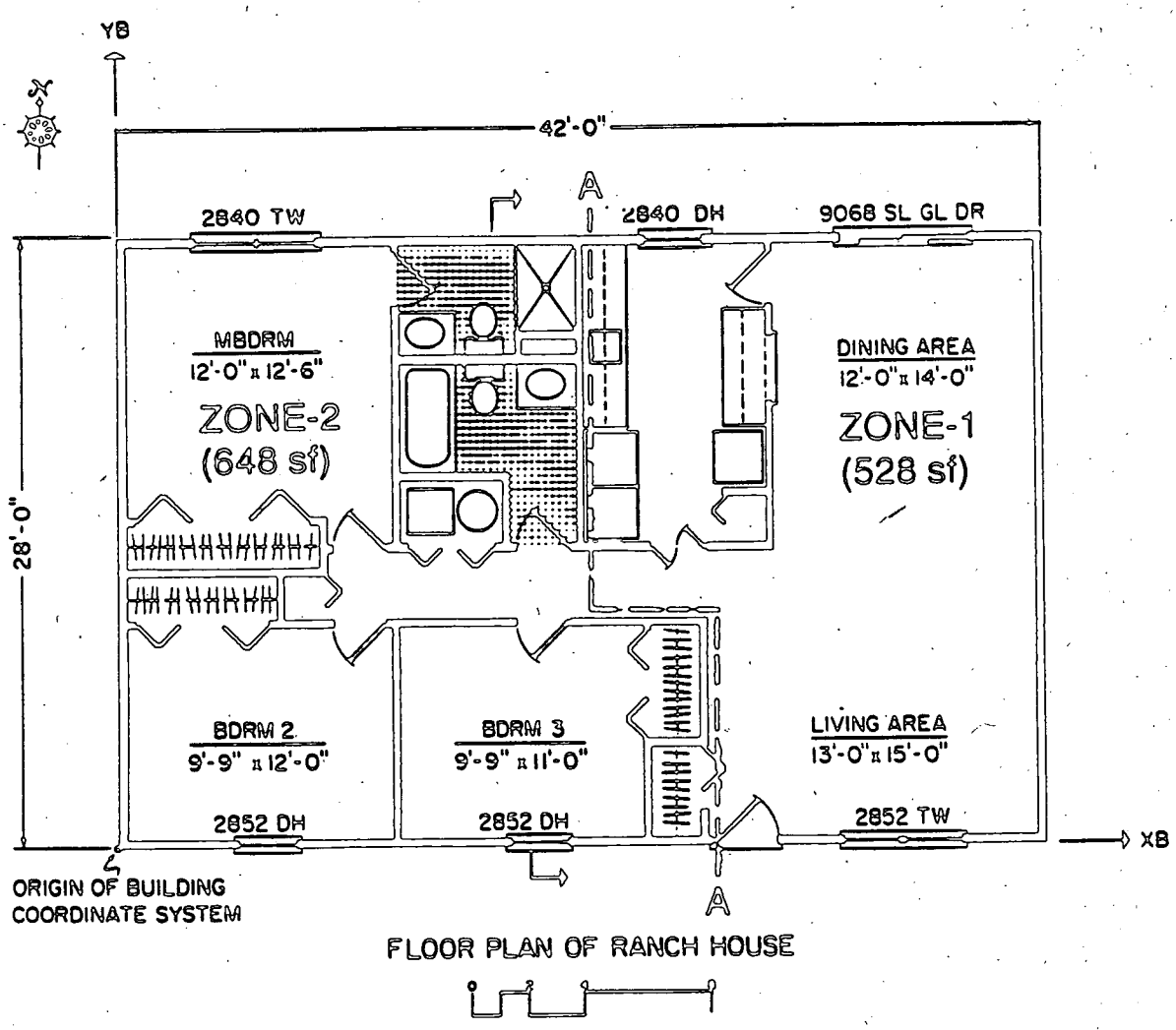

FLOOR PLAN OF RANCH HOUSE

803-6675AA

Section. In this analysis, the attic is not modeled as a separate zone. Instead, the roof, insulated ceiling, and air space combination are treated as an exterior wall. For the building coordinate system, Z = 0 is at slab level, not ground level.

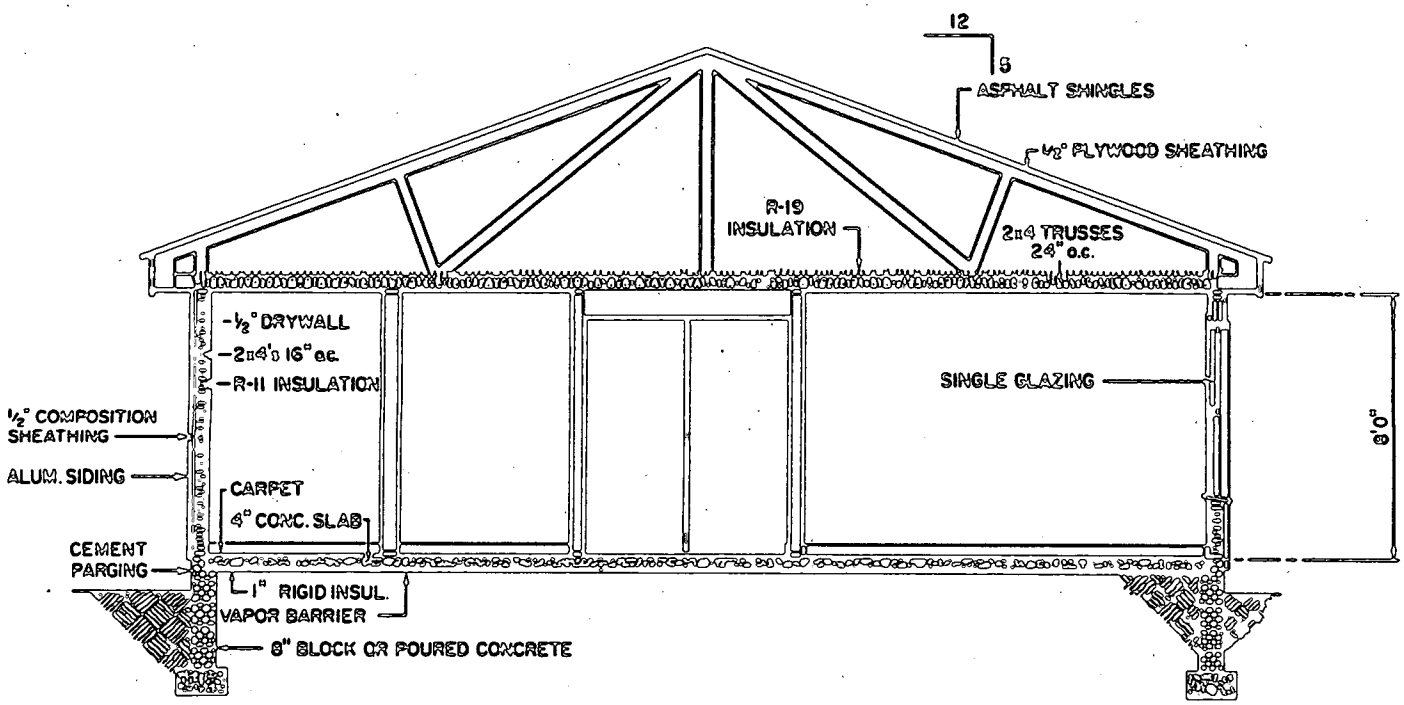

SECTION THRU RANCH HOUSE

HDL 003-0071

DrawBDL axonometric wire frame view of surfaces as input into BDL. In this analysis, the attic is not modeled as a separate zone. Instead, the combination of roof, airspace, and insulated ceiling is treated as tilted exterior wall sections that are constrained to have a total area equal to the ceiling area (1176 sq.ft.). Because of this constraint, the roof sections in the drawing do not meet. Note also that the triangular gable ends have been neglected, and that the exterior walls and roofs have been divided into insulated and stud sections. Interior surfaces are not shown.

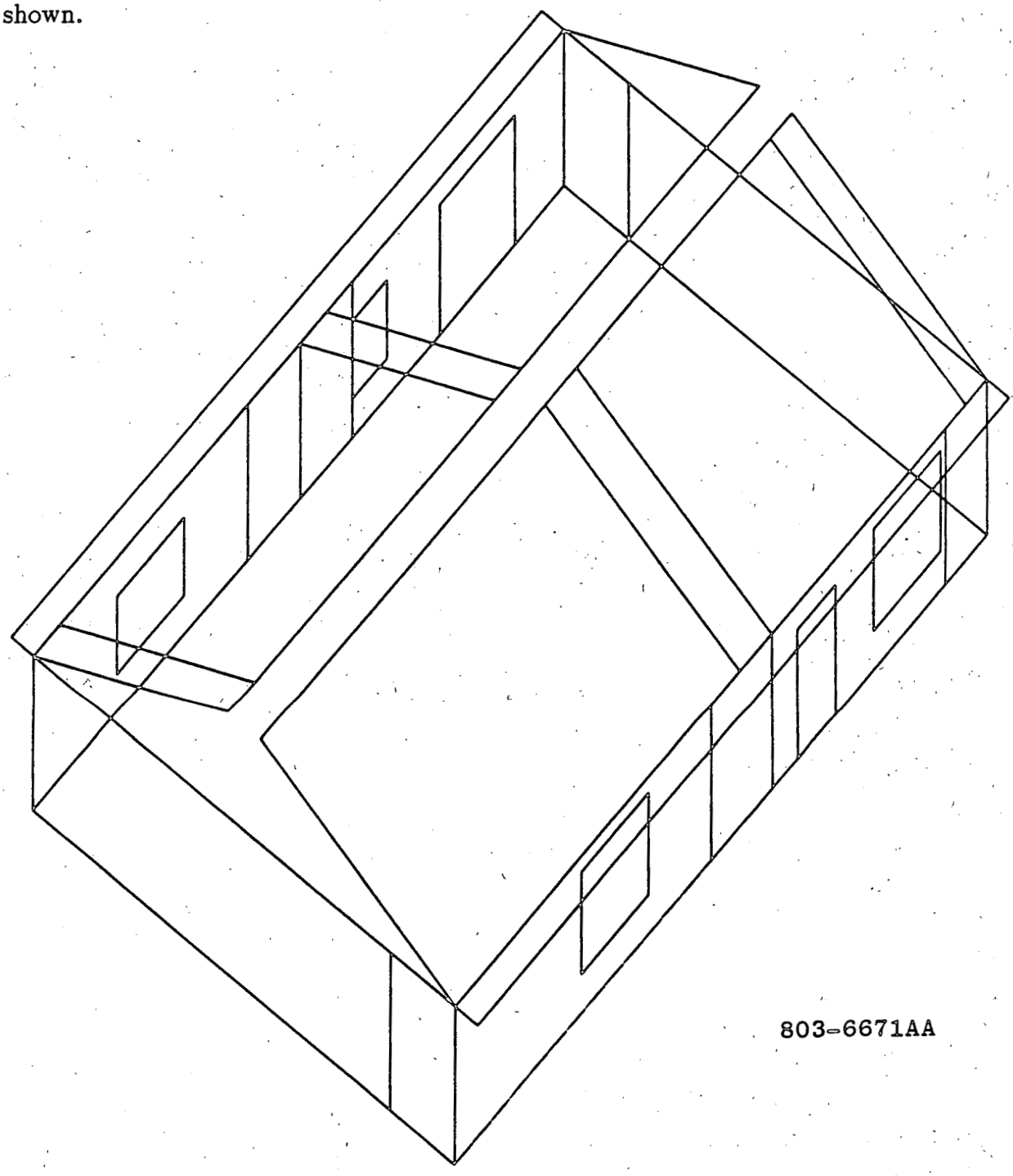

L D L P R O C E S S O R I N P U T D A T A

Thu Nov 4 15:07:28 1993LDL RUN 1

```
*   2 *
*   3 * TITLE     LINE-1 *SINGLE FAMILY RESIDENCE *
*   4 *           LINE-2 *CONVENTIONAL DESIGN *
*   5 *           LINE-3 *CUSTOM WEIGHTING FACTORS*
*   6 *           LINE-4 *2 zones - living & sleeping *  ..
*   7 *
*   8 *           ABORT                ERRORS ..
*   9 *           DIAGNOSTIC           WARNINGS  ..
*  10 *           RUN-PERIOD           JAN 1 1974 THRU DEC 31 1974 ..
*  11 *           BUILDING-LOCATION    LAT=41.88  LON=87.63  T-Z=6 ..
*  12 *           LOADS-REPORT         SUMMARY=(LS-A,LS-D)  ..
*  13 *
*  14 * $         This input describes a small (1176 sq ft) conventional ranch style
*  15 * $         house.  The house is modeled as 2 zones: the living area and the
*  16 * $         sleeping quarters.  The attic is not modeled as a separate zone.
*  17 * $         Instead, the roof, insulated ceiling, and airspace are treated as a
*  18 * $         single construction.  All internal heat gains are lumped into a single
*  19 * $         schedule.
*  20 *
*  21 *
*  22 *                          $ -----SCHEDULE----- $
*  23 *
*  24 * SCH-1     =DAY-SCHEDULE        (1,5) (.1) (6,9) (.17,.22,.44,.26)
*  25 *                               (10,11) (.16) (12,14) (.20,.15,.13)
*  26 *                               (15,16) (.13) (17,19) (.19,.21,.23)
*  27 *                               (20,24) (.37) ..
*  28 * INT-LDS-1 =SCHEDULE           THRU DEC 31 (ALL) SCH-1 ..
*  29 *
*  30 *                          $ -----MATERIALS----- $
*  31 *
*  32 * STUD-1     =MAT      TH=.2917 COND=.0667 DENS=32  S-H=.33 $2X4STUD$ ..
*  33 * DRYWALL-1 =MAT      TH=.0417 COND=.0925 DENS=50  S-H=.26 $1/2 IN DRYWALL$ ..
*  34 * WALL-INS-1=MAT      TH=.2618 COND=.0238 DENS=6   S-H=.2  $R11 INSULATION$ ..
*  35 * SHEATH-1  =MAT      TH=.0417 COND=.0342 DENS=22  S-H=.31 $1/2-IN SHEATHING$ ..
*  36 * AL-SIDE-1 =MAT      TH=.0104 COND=.0171 DENS=170 S-H=.29 $ALUM SIDING$ ..
*  37 * AS-SHG-1  =MAT      TH=.0208 COND=.0473 DENS=70  S-H=.30 $ASPHALT SHINGLES$ ..
*  38 * PLYW-1    =MAT      TH=.0417 COND=.0667 DENS=34  S-H=.29 $1/2-IN PLYWOOD$ ..
*  39 * CEIL-INS-1=MAT      TH=.4522 COND=.0238 DENS=6   S-H=.2  $R19 INSULATION$ ..
*  40 * AT-AIR-1  =MAT      RES=3.1                              $ATTIC AIR SPACE$ ..
*  41 * WALL-AIR-1=MAT      RES=0.90                             $WALL AIR SPACE$ ..
*  42 * EXP-POLY-1=MAT      TH=.0833 COND=.0167 DENS=2.2 S-H=.29 $1-IN POLYSTYRENE$ ..
*  43 * CONCRETE-1=MAT      TH=.3333 COND=.7576 DENS=140 S-H=.2  $4-IN CONCRETE$ ..
*  44 * CARP/PAD-1=MAT      RES=2.08                             $CARPET AND PAD$ ..
*  45 *
*  46 *                          $ -----GLAZING----- $
*  47 *
*  48 * GT-WIN-1  =GLASS-TYPE        P=1  S-C=.60 ..
*  49 *
*  50 *                          $ -----CONSTRUCTIONS----- $
*  51 *
*  52 * LAY-1     =LAYERS            MAT=(AL-SIDE-1,SHEATH-1,WALL-INS-1,DRYWALL-1) ..
*  53 * INS-WL-1  =CONS              LAYERS=LAY-1  ..
*  54 *
*  55 * LAY-2     =LAYERS            MAT=(AL-SIDE-1,SHEATH-1,STUD-1,DRYWALL-1) ..
*  56 * STUD-WL-1 =CONS              LAYERS=LAY-2  ..
```

```
*  57 *
*  58 * LAY-3     =LAYERS            MAT=(AS-SHG-1,PLYW-1,AT-AIR-1,CEIL-INS-1,
*  59 *                                 DRYWALL-1)  I-F-R=.61 ..
*  60 * INS-RF-1  =CONS              LAYERS=LAY-3  ABS=.86 ..
*  61 *
*  62 * LAY-4     =LAYERS            MAT=(AS-SHG-1,PLYW-1,STUD-1,AT-AIR-1,STUD-1,
*  63 *                                 DRYWALL-1)  I-F-R=.92 ..
*  64 * STUD-RF-1 =CONS              LAYERS=LAY-4  ABS=.86 ..
*  65 *
*  66 * LAY-5     =LAYERS            MAT=(EXP-POLY-1,CONCRETE-1,CARP/PAD-1)
*  67 *                                 I-F-R=0.92 ..
*  68 * SLAB-1    =CONS              LAYERS=LAY-5 ..
*  69 * DR-1      =CONS              U=.629  ABS=.78  ..
*  70 * LAY-6     =LAYERS            MAT=(DRYWALL-1,WALL-AIR-1,DRYWALL-1)  ..
*  71 * PARTITION =CONS              LAYERS=LAY-6 ..
*  72 *
*  73 *                        $ -----BUILDING SHADE----- $
*  74 *
*  75 *          BUILDING-SHADE     X=0  Y=0  Z=8  H=1.5  W=42    $FRONT OVERHANG$
*  76 *                             AZ=180  TILT=180 ..
*  77 *
*  78 *          BUILDING-SHADE     X=0  Y=28  Z=8  H=1.5  W=42    $REAR OVERHANG$
*  79 *                             AZ=180  TILT=0 ..
*  80 *
*  81 *                       $ -----SPACE DESCRIPTION----- $
*  82 *
*  83 * LIVING    =SPACE-CONDITIONS  SOURCE-SCHEDULE=INT-LDS-1
*  84 *                             SOURCE-TYPE=ELECTRIC  SOURCE-BTU/HR=7252
*  85 *                             INF-METHOD=RESIDENTIAL  FLOOR-WEIGHT = 0  ..
*  86 *
*  87 * SLEEPING  =SPACE-CONDITIONS  SOURCE-SCHEDULE=INT-LDS-1
*  88 *                             SOURCE-TYPE=ELECTRIC  SOURCE-BTU/HR=3000
*  89 *                             INF-METHOD=RESIDENTIAL  FLOOR-WEIGHT = 0 ..
*  90 *
*  91 *                       $ -----Living zone------ $
*  92 *
*  93 * ZONE-1    =SPACE             A=532  V=4256  S-C=LIVING ..
*  94 *
*  95 * FRONT-WL-1=E-W               H=8     W=13.7  AZ=180  X=25  CONS=INS-WL-1 ..
*  96 * WIN-1       =WI              H=5.2   W=5.3  G-T=GT-WIN-1  X=8  Y=2
*  97 *                             FRAME-WIDTH=.25 ..
*  98 * DOOR-1      =DOOR            H=6.67  W=3  CONS=DR-1  X=2 ..
*  99 *
* 100 * FRONT-WL-2=E-W               H=8  W=3.3   AZ=180  X=38.7 CONS=STUD-WL-1 ..
* 101 *
* 102 * RIGHT-WL-1=E-W               H=8  W=23.7  AZ=90  X=42  Y=0  CONS=INS-WL-1 ..
* 103 *
* 104 * RIGHT-WL-2=E-W               H=8  W=4.3   AZ=90  X=42  Y=23.7 CONS=STUD-WL-1 ..
* 105 *
* 106 * REAR-WL-1 =E-W               LIKE FRONT-WL-1  W=16.9  X=42  Y=28  AZ=0 ..
* 107 * WIN-2       =WI              H=6.67  W=6.0  X=4  Y=0  G-T=GT-WIN-1 ..
* 108 * WIN-3       =WI              H=4.0   W=2.7  X=13.5 Y=2  G-T=GT-WIN-1
* 109 *                             FRAME-WIDTH=.25  ..
* 110 *
* 111 * REAR-WL-2 =E-W               LIKE FRONT-WL-2  W=4.1  X=25.1  Y=28  AZ=0 ..
* 112 *
* 113 * FRONT-RF-1=ROOF               H=14  W=15.3     X=25  Y=0   Z=8
* 114 *                                               AZ=180  TILT=22.62
* 115 *                             CONS=INS-RF-1 ..
* 116 *
* 117 * FRONT-RF-2=ROOF               H=14  W=1.7      X=40.3  Y=0  Z=8
* 118 *                                               AZ=180  TILT=22.62
* 119 *                             CONS=STUD-RF-1 ..
```

```
* 120 *
* 121 * REAR-RF-1 =ROOF              LIKE FRONT-RF-1  W=18.9  X=42  Y=28  AZ=0 ..
* 122 *
* 123 * REAR-RF-2 =ROOF              LIKE FRONT-RF-2  W=2.1  X=23.1  Y=28  AZ=0 ..
* 124 *
* 125 *            U-F               CONS=SLAB-1  A=532  $PERIMETER AREA = 66$
* 126 *                              U-EFFECTIVE = .036  TILT = 180 ..
* 127 *
* 128 * SEPARATION=I-W               AREA=264  CONS=PARTITION  NEXT-TO ZONE-2 ..
* 129 *
* 130 *                       $ -----Sleeping zone------ $
* 131 *
* 132 * ZONE-2    =SPACE             A=644  V=5154  S-C=SLEEPING ..
* 133 *
* 134 * FRONT-WL-3=E-W               H=8  W=20.2  AZ=180  CONS=INS-WL-1 ..
* 135 * WIN-4       =WI              LIKE WIN-1  X=10  ..
* 136 *
* 137 * FRONT-WL-4=E-W               H=8  W=4.8  AZ=180  X=20.2  CONS=STUD-WL-1 ..
* 138 *
* 139 * REAR-WL-3 =E-W               LIKE REAR-WL-1  X=16.9  ..
* 140 * WIN-5       =WI              H=4.0   W=5.3  X=5 Y=2  G-T=GT-WIN-1
* 141 *                              FRAME-WIDTH=.25 ..
* 142 *
* 143 * REAR-WL-4 =E-W               LIKE REAR-WL-2  X=21 ..
* 144 *
* 145 * LEFT-WL-1 =E-W               LIKE RIGHT-WL-1  X=0   Y=28  AZ=270 ..
* 146 *
* 147 * LEFT-WL-2 =E-W               LIKE RIGHT-WL-2  X=0   Y=4.3  AZ=270 ..
* 148 *
* 149 * FRONT-RF-3=ROOF              H=14  W=22.5     X=0  Y=0   Z=8
* 150 *                                               AZ=180  TILT=22.62
* 151 *                              CONS=INS-RF-1 ..
* 152 *
* 153 * FRONT-RF-4=ROOF              H=14  W=2.5      X=22.5  Y=0  Z=8
* 154 *                                               AZ=180  TILT=22.62
* 155 *                              CONS=STUD-RF-1 ..
* 156 *
* 157 * REAR-RF-3 =ROOF              LIKE REAR-RF-1  X=21  ..
* 158 *
* 159 * REAR-RF-4 =ROOF              LIKE REAR-RF-2  X=2.1  ..
* 160 *
* 161 *            U-F               CONS=SLAB-1  A=644  $PERIMETER AREA = 74$
* 162 *                              U-EFFECTIVE = .036  TILT = 180 ..
* 163 *
* 164 * END ..
* 165 * COMPUTE LOADS ..
* 166 *
* 167 * INPUT SYSTEMS ..
```

```
° 168 °
° 169 ° TITLE     LINE-5 °RUN 1: RESYS with on/off heat pump°  ..
° 170 °
° 171 °           SYSTEMS-REPORT     SUMMARY=(SS-A,SS-H,SS-F,SS-O) ..
° 172 °
° 173 ° $         The house is heated and cooled by a central on/off 2 ton heat pump.
° 174 ° $         The heat pump is controlled by a thermostat located in the living
° 175 ° $         area.  Electric baseboards are located in the bedrooms to provide the
° 176 ° $         heat needed in addition to that provided by the central unit.
° 177 °
° 178 °
° 179 °                    $ -----SCHEDULES----- $
° 180 °
° 181 ° HEAT-1    =SCHEDULE      THRU DEC 31 (ALL) (1,7)(60)
° 182 °                                            (8,22)(70)
° 183 °                                            (23,24)(60) ..
° 184 ° HEAT-2    =SCHEDULE      THRU DEC 31 (ALL) (1,24)(60)  .. $bedroom basebrd sched
° 185 °
° 186 ° COOL-1    =SCHEDULE      THRU DEC 31 (ALL) (1,24) (78)  ..
° 187 °
° 188 °                    $ -----Living zone------ $
° 189 °
° 190 ° ZONE-1    =ZONE          DESIGN-HEAT-T=70  DESIGN-COOL-T=78
° 191 °                          ZONE-TYPE=CONDITIONED
° 192 °                          ASSIGNED-CFM=350
° 193 °                          HEAT-TEMP-SCH=HEAT-1
° 194 °                          COOL-TEMP-SCH=COOL-1 ..
° 195 °
° 196 °                    $ -----Sleeping zone------ $
° 197 °
° 198 ° ZONE-2    =ZONE          LIKE ZONE-1  HEAT-TEMP-SCH=HEAT-2
° 199 °                          BASEBOARD-CTRL=THERMOSTATIC
° 200 °                          BASEBOARD-RATING=-5000
° 201 °                          ASSIGNED-CFM=350 ..
° 202 °
° 203 °           $ -----HEAT PUMP AND CENTRAL SYSTEM PARAMETERS----- $
° 204 °
° 205 ° SYS-1     =SYSTEM        SYSTEM-TYPE=RESYS            ZONE-NAMES=(ZONE-1,ZONE-2)
° 206 °                          HEAT-SOURCE=HEAT-PUMP        SUPPLY-CFM=700
° 207 °                          COOLING-CAPACITY=24000       HP-SUPP-HT-CAP=-24000.
° 208 °                          COOL-SH-CAP=16000
° 209 °                          MAX-SUPPLY-T=105             MIN-SUPPLY-T=57
° 210 °                          COOLING-EIR=.343             HEATING-EIR=.306
° 211 °                          HP-SUPP-SOURCE=ELECTRIC      MAX-HP-SUPP-T=40.
° 212 °                          DEFROST-TYPE=REVERSE-CYCLE   DEFROST-CTRL=ON-DEMAND  ..
° 213 °
° 214 ° PLANT1 = PLANT-ASSIGNMENT  SYSTEM-NAMES = (SYS-1)
° 215 °                            DHW-TYPE=ELECTRIC
° 216 °                            DHW-GAL/MIN  = .375
° 217 °                            DHW-SCH      = DHWSCH-1 ..
° 218 °
° 219 ° DHWSCH-1  =SCHEDULE        THRU DEC 31 (ALL)
° 220 °                            (1,7)(0)(8,9)(1.0)(10,12)(0)(13,14)(.05)
° 221 °                            (15,17)(0)(18,21)(.67)(22,24)(0) ..
° 222 °
```

```
* 223 * END ..
* 224 * COMPUTE SYSTEMS ..
* 225 *
* 226 * INPUT PLANT ..
```

P D L P R O C E S S O R I N P U T D A T A

Thu Nov 4 15:07:28 1993PDL RUN 1

```
* 227 * PLANT1 = PLANT-ASSIGNMENT  ..
* 228 *
* 229 *          PLANT-REPORT        SUMMARY=(BEPS,PS-B) ..
* 230 *
* 231 * END ..
* 232 * COMPUTE PLANT ..
* 233 *
* 234 * INPUT ECONOMICS  ..
```

```
* 235 * ECONOMICS-REPORT  SUMMARY=(ES-D)  ..
* 236 *
* 237 * ELEC-COST  = UTILITY-RATE  RESOURCE = ELECTRICITY
* 238 *             BLOCK-CHARGES = (ELCOST)  ..
* 239 *
* 240 * ELCOST     = BLOCK-CHARGE  BLOCK1-TYPE = ENERGY
* 241 *             BLOCK1-DATA = (800,.065,400,.080,1,.10)  ..
* 242 *
* 243 * GAS-COST   = UTILITY-RATE  RESOURCE = NATURAL-GAS
* 244 *                            ENERGY-CHG = .55  ..
* 245 * END  ..
* 246 * COMPUTE ECONOMICS  ..
* 247 * INPUT SYSTEMS ..
```

SINGLE FAMILY RESIDENCE
CUSTOM WEIGHTING FACTORS
REPORT- LS-A SPACE PEAK LOADS SUMMARY

CONVENTIONAL/DESIGN
2 zones - living & sleeping

DOE-2.1E-001 Thu Nov 4 15:07:28 1993LDL RUN 1

WEATHER FILE- TRY CHICAGO

SPACE NAME	MULTIPLIER SPACE	MULTIPLIER FLOOR	COOLING LOAD (KBTU/HR)	TIME OF PEAK	DRY-BULB	WET-BULB	HEATING LOAD (KBTU/HR)	TIME OF PEAK	DRY-BULB	WET-BULB
ZONE-1	1.	1.	7.949	JUL 13 6 PM	99.F	77.F	-13.552	JAN 12 5 AM	-4.F	-5.F
ZONE-2	1.	1.	7.003	JUL 13 6 PM	99.F	77.F	-14.212	JAN 12 7 AM	-6.F	-7.F
SUM			14.952				-27.764			
BUILDING PEAK			14.952	JUL 13 6 PM	99.F	77.F	-27.616	JAN 12 7 AM	-6.F	-7.F

SINGLE FAMILY RESIDENCE CONVENTIONAL DESIGN DOE-2.1E-001 Thu Nov 4 15:07:28 1993LDL RUN 1
CUSTOM WEIGHTING FACTORS 2 zones - living & sleeping
REPORT- LS-D BUILDING MONTHLY LOADS SUMMARY WEATHER FILE- TRY CHICAGO

	COOLING						HEATING						ELEC	
MONTH	COOLING ENERGY (MBTU)	TIME OF MAX DY	TIME OF MAX HR	DRY-BULB TEMP	WET-BULB TEMP	MAXIMUM COOLING LOAD (KBTU/HR)	HEATING ENERGY (MBTU)	TIME OF MAX DY	TIME OF MAX HR	DRY-BULB TEMP	WET-BULB TEMP	MAXIMUM HEATING LOAD (KBTU/HR)	ELEC-TRICAL ENERGY (KWH)	MAXIMUM ELEC LOAD (KW)
JAN	0.00000					0.000	-9.902	12	7	-6.F	-7.F	-27.616	478.	1.322
FEB	0.00162	28	14	53.F	42.F	0.648	-8.479	4	6	7.F	6.F	-23.509	431.	1.322
MAR	0.04061	3	16	79.F	62.F	4.756	-6.260	24	5	9.F	8.F	-23.768	478.	1.322
APR	0.56535	27	16	84.F	61.F	7.920	-2.738	9	5	26.F	25.F	-13.905	462.	1.322
MAY	0.99990	21	13	85.F	75.F	10.497	-1.404	7	4	34.F	29.F	-10.352	478.	1.322
JUN	2.47810	20	17	91.F	78.F	12.484	-0.330	25	4	53.F	47.F	-4.581	462.	1.322
JUL	4.35998	13	17	99.F	77.F	14.952	-0.026	6	4	60.F	54.F	-1.638	478.	1.322
AUG	3.52976	26	16	94.F	76.F	12.184	-0.059	5	5	55.F	54.F	-2.592	478.	1.322
SEP	1.64506	11	14	87.F	72.F	11.165	-0.862	22	5	35.F	31.F	-9.458	462.	1.322
OCT	0.60126	10	15	68.F	54.F	6.179	-2.157	2	4	31.F	28.F	-12.149	478.	1.322
NOV	0.15103	2	13	74.F	61.F	7.251	-5.302	15	3	26.F	25.F	-15.920	462.	1.322
DEC	0.00000					0.000	-8.310	26	5	14.F	14.F	-19.821	478.	1.322
TOTAL	14.373						-45.829						5625.	
MAX						14.952						-27.616		1.322

SINGLE FAMILY RESIDENCE — CONVENTIONAL DESIGN — DOE-2.1E-001 Thu Nov 4 15:07:28 1993SDL RUN 1
CUSTOM WEIGHTING FACTORS — 2 zones - living & sleeping — RUN 1: RESYS with on/off heat pump
REPORT- SV-A SYSTEM DESIGN PARAMETERS — SYS-1 — WEATHER FILE- TRY CHICAGO

SYSTEM NAME	SYSTEM TYPE	ALTITUDE MULTIPLIER	FLOOR AREA (SQFT)	MAX PEOPLE
SYS-1	RESYS	1.000	1176.0	0.

SUPPLY FAN (CFM)	ELEC (KW)	DELTA-T (F)	RETURN FAN (CFM)	ELEC (KW)	DELTA-T (F)	OUTSIDE AIR RATIO	COOLING CAPACITY (KBTU/HR)	SENSIBLE (SHR)	HEATING CAPACITY (KBTU/HR)	COOLING EIR (BTU/BTU)	HEATING EIR (BTU/BTU)	HEAT PUMP SUPP-HEAT (KBTU/HR)
700.	0.090	0.4	0.	0.000	0.0	0.000	24.000	0.667	-26.902	0.34	0.31	-24.000

ZONE NAME	SUPPLY FLOW (CFM)	EXHAUST FLOW (CFM)	FAN (KW)	MINIMUM FLOW RATIO	OUTSIDE AIR FLOW (CFM)	COOLING CAPACITY (KBTU/HR)	SENSIBLE (SHR)	EXTRACTION RATE (KBTU/HR)	HEATING CAPACITY (KBTU/HR)	ADDITION RATE (KBTU/HR)	MULTIPLIER
ZONE-1	350.	0.	0.000	1.000	0.	0.00	0.00	7.82	0.00	-13.23	1.0
ZONE-2	350.	0.	0.000	1.000	0.	0.00	0.00	7.82	0.00	-18.23	1.0

SINGLE FAMILY RESIDENCE CONVENTIONAL DESIGN DOE-2.1E-001 Thu Nov 4 15:07:28 1993SDL RUN 1
CUSTOM WEIGHTING FACTORS 2 zones - living & sleeping RUN 1: RESYS with on/off heat pump
REPORT- SS-P LOAD, ENERGY AND PART LOAD DHW TANK OPERATION FOR PLANT1 WEATHER FILE- TRY CHICAGO

TANK SIZE is 30.0 (GAL) HEATER CAP = 25.774 (KBTU/HR) FLOW RATE = 0.375 (GAL/MIN) PUMP = 0.000 (KW)

MONTH		UNIT LOAD (MBTU) (KBTU/HR)	ENERGY USE (KWH) (KW)	RCV EN USE (KWH) (KW)	PUMP ENERGY (KWH) (KW)	Number of hours within each PART LOAD range 00 10	10 20	20 30	30 40	40 50	50 60	60 70	70 80	80 90	90 100	100 +	TOTAL RUN HOURS
JAN	SUM	2.781	978.461	0.000	0.000	558	0	0	0	0	124	0	62	0	0	0	744
	PEAK	18.767	5.719	0.000	0.000												
	DAY/HR	31/ 9	31/ 9	31/24	31/24												
FEB	SUM	2.587	910.286	0.000	0.000	504	0	0	0	0	112	0	56	0	0	0	672
	PEAK	19.330	5.890	0.000	0.000												
	DAY/HR	28/ 9	28/ 9	28/24	28/24												
MAR	SUM	2.809	988.242	0.000	0.000	558	0	0	0	0	124	0	62	0	0	0	744
	PEAK	18.955	5.776	0.000	0.000												
	DAY/HR	31/ 9	31/ 9	31/24	31/24												
APR	SUM	2.584	909.023	0.000	0.000	540	0	0	0	120	0	0	60	0	0	0	720
	PEAK	18.017	5.490	0.000	0.000												
	DAY/HR	30/ 9	30/ 9	30/ 1	30/ 1												
MAY	SUM	2.475	870.824	0.000	0.000	558	0	0	0	124	0	62	0	0	0	0	744
	PEAK	16.703	5.090	0.000	0.000												
	DAY/HR	31/ 9	31/ 9	31/ 1	31/ 1												
JUN	SUM	2.207	776.454	0.000	0.000	540	0	0	0	120	0	60	0	0	0	0	720
	PEAK	15.389	4.689	0.000	0.000												
	DAY/HR	30/ 9	30/ 9	30/ 1	30/ 1												
JUL	SUM	2.114	743.631	0.000	0.000	558	0	0	124	0	62	0	0	0	0	0	744
	PEAK	14.263	4.346	0.000	0.000												
	DAY/HR	31/ 9	31/ 9	31/ 1	31/ 1												
AUG	SUM	2.058	724.058	0.000	0.000	558	0	0	124	0	62	0	0	0	0	0	744
	PEAK	13.888	4.232	0.000	0.000												
	DAY/HR	31/ 9	31/ 9	31/ 1	31/ 1												
SEP	SUM	2.045	719.643	0.000	0.000	540	0	0	120	0	60	0	0	0	0	0	720
	PEAK	14.263	4.346	0.000	0.000												
	DAY/HR	30/ 9	30/ 9	30/ 1	30/ 1												
OCT	SUM	2.253	792.550	0.000	0.000	558	0	0	0	124	0	62	0	0	0	0	744
	PEAK	15.201	4.632	0.000	0.000												
	DAY/HR	31/ 9	31/ 9	31/24	31/24												
NOV	SUM	2.368	833.267	0.000	0.000	540	0	0	0	120	0	60	0	0	0	0	720
	PEAK	16.515	5.033	0.000	0.000												
	DAY/HR	30/ 9	30/ 9	30/24	30/24												
DEC	SUM	2.642	929.540	0.000	0.000	558	0	0	0	124	0	0	62	0	0	0	744
	PEAK	17.829	5.433	0.000	0.000												
	DAY/HR	31/ 9	31/ 9	31/24	31/24												
YR	SUM	28.922	10175.467	0.000	0.000	6570	0	0	368	732	544	244	302	0	0	0	8760
	PEAK	19.330	5.890	0.000	0.000												
	MON/DAY	2/28	2/28	12/31	12/31												

SINGLE FAMILY RESIDENCE — CONVENTIONAL DESIGN — DOE-2.1E-001 Thu Nov 4 15:07:28 1993SDL RUN 1
CUSTOM WEIGHTING FACTORS — 2 zones - living & sleeping — RUN 1: RESYS with on/off heat pump
REPORT- SS-A SYSTEM MONTHLY LOADS SUMMARY FOR SYS-1 — WEATHER FILE- TRY CHICAGO

	COOLING						HEATING						ELEC	
MONTH	COOLING ENERGY (MBTU)	TIME OF MAX DY	TIME OF MAX HR	DRY-BULB TEMP	WET-BULB TEMP	MAXIMUM COOLING LOAD (KBTU/HR)	HEATING ENERGY (MBTU)	TIME OF MAX DY	TIME OF MAX HR	DRY-BULB TEMP	WET-BULB TEMP	MAXIMUM HEATING LOAD (KBTU/HR)	ELEC-TRICAL ENERGY (KWH)	MAXIMUM ELEC LOAD (KW)
JAN	0.00000					0.000	-8.435	5	8	11.F	10.F	-26.016	2340.	8.443
FEB	0.00000					0.000	-7.162	25	8	10.F	9.F	-25.750	1758.	8.443
MAR	0.00000					0.000	-4.952	25	8	14.F	12.F	-26.144	1363.	8.443
APR	0.11742	28	15	78.F	68.F	5.487	-1.741	8	8	30.F	27.F	-19.285	801.	4.486
MAY	0.31259	21	14	85.F	75.F	10.998	-0.603	6	8	37.F	33.F	-14.396	633.	3.223
JUN	1.49268	20	18	91.F	78.F	13.441	-0.024	1	8	50.F	49.F	-3.626	675.	2.508
JUL	3.61637	13	17	97.F	78.F	15.402	0.000					0.000	937.	2.752
AUG	2.67579	26	17	94.F	76.F	12.303	0.000					0.000	828.	2.329
SEP	0.75126	11	15	87.F	72.F	10.882	-0.273	22	8	34.F	31.F	-14.430	624.	3.486
OCT	0.05083	5	16	74.F	62.F	2.916	-1.252	21	8	30.F	29.F	-17.532	726.	4.411
NOV	0.03497	2	13	74.F	61.F	4.121	-4.124	26	8	25.F	22.F	-20.693	1191.	5.330
DEC	0.00000					0.000	-6.934	9	8	13.F	12.F	-25.461	1801.	7.695
TOTAL	9.052						-35.500						13676.	
MAX						15.402						-26.144		8.443

	--FAN ELEC---		--FUEL HEAT--		--FUEL COOL--		-ELEC HEAT--		-ELEC COOL--	
MONTH	FAN ENERGY (KWH)	MAXIMUM FAN LOAD (KW)	GAS OIL ENERGY (MBTU)	MAXIMUM GAS OIL LOAD (KBTU/HR)	GAS OIL ENERGY (MBTU)	MAXIMUM GAS OIL LOAD (KBTU/HR)	ELECTRIC ENERGY (KWH)	MAXIMUM ELECTRIC LOAD (KW)	ELECTRIC ENERGY (KWH)	MAXIMUM ELECTRIC LOAD (KW)
JAN	40.	0.090	0.000	0.000	0.000	0.000	1776.	7.031	1.	0.025
FEB	35.	0.090	0.000	0.000	0.000	0.000	1253.	7.031	1.	0.025
MAR	21.	0.090	0.000	0.000	0.000	0.000	833.	7.031	1.	0.025
APR	7.	0.080	0.000	0.000	0.000	0.000	292.	3.084	23.	0.678
MAY	4.	0.052	0.000	0.000	0.000	0.000	97.	1.849	49.	1.165
JUN	8.	0.058	0.000	0.000	0.000	0.000	5.	0.544	200.	1.442
JUL	18.	0.072	0.000	0.000	0.000	0.000	0.	0.000	441.	1.743
AUG	13.	0.057	0.000	0.000	0.000	0.000	0.	0.000	337.	1.393
SEP	5.	0.056	0.000	0.000	0.000	0.000	48.	2.111	108.	1.182
OCT	5.	0.074	0.000	0.000	0.000	0.000	218.	3.016	16.	0.468
NOV	17.	0.090	0.000	0.000	0.000	0.000	680.	3.919	8.	0.556
DEC	31.	0.090	0.000	0.000	0.000	0.000	1255.	6.284	1.	0.025
TOTAL	204.		0.000		0.000		6457.		1186.	
MAX		0.090		0.000		0.000		7.031		1.743

SINGLE FAMILY RESIDENCE — CONVENTIONAL DESIGN — DOE-2.1E-001 Thu Nov 4 15:07:28 1993SDL RUN 1
CUSTOM WEIGHTING FACTORS — 2 zones - living & sleeping — RUN 1: RESYS with on/off heat pump
REPORT- SS-P LOAD, ENERGY AND PART LOAD HEATING IN SYS-1 — WEATHER FILE- TRY CHICAGO

UNIT TYPE is RESYS HEATING-CAPACITY = -26.902 (KBTU/HR) HEATING-EIR = 0.306 (BTU/BTU) SUPPLY-FLOW = 700. (CFM)

MONTH		UNIT LOAD (MBTU) (KBTU/HR)	ENERGY USE (KWH) (KW)	COMPRESSOR (KWH) (KW)	FAN ENERGY (KWH) (KW)		Number of hours within each PART LOAD range 00-10	10-20	20-30	30-40	40-50	50-60	60-70	70-80	80-90	90-100	100+	TOTAL RUN HOURS
JAN	SUM	-8.435	1776.244	936.988	40.019	CMP	14	23	47	87	58	54	79	38	21	34	138	593
	PEAK	-26.016	7.031	2.611	0.090	FAN	16	31	93	87	77	83	29	34	35	21	213	719
	DAY/HR	5/ 8	0/ 0	18/ 8	0/ 0													
FEB	SUM	-7.162	1252.991	949.996	35.432	CMP	17	32	68	43	48	63	37	45	58	61	152	624
	PEAK	-25.750	7.031	2.520	0.090	FAN	21	36	83	56	62	56	59	67	55	51	105	651
	DAY/HR	25/ 8	0/ 0	22/ 8	0/ 0													
MAR	SUM	-4.952	833.268	711.649	21.055	CMP	54	78	97	101	118	71	29	11	13	7	48	627
	PEAK	-26.144	7.031	2.533	0.090	FAN	52	78	145	154	90	35	14	10	8	6	43	635
	DAY/HR	25/ 8	0/ 0	29/ 8	0/ 0													
APR	SUM	-1.741	292.476	277.148	7.099	CMP	100	69	71	48	27	19	1	7	2	1	2	347
	PEAK	-19.285	3.084	2.210	0.080	FAN	94	88	88	39	25	8	2	2	1	0	0	347
	DAY/HR	8/ 8	0/ 0	9/ 8	0/ 0													
MAY	SUM	-0.603	97.248	90.321	3.514	CMP	97	45	24	4	3	3	0	2	0	0	0	178
	PEAK	-14.396	1.849	1.837	0.052	FAN	90	53	23	7	3	2	0	0	0	0	0	178
	DAY/HR	6/ 8	0/ 0	6/ 8	0/ 0													
JUN	SUM	-0.024	5.123	4.955	7.585	CMP	10	4	0	0	0	0	0	0	0	0	0	14
	PEAK	-3.626	0.544	0.501	0.058	FAN	10	4	0	0	0	0	0	0	0	0	0	14
	DAY/HR	1/ 8	0/ 0	1/ 8	0/ 0													
JUL	SUM	0.000	0.000	0.000	17.734	CMP	0	0	0	0	0	0	0	0	0	0	0	0
	PEAK	0.000	0.000	0.000	0.072	FAN	0	0	0	0	0	0	0	0	0	0	0	0
	DAY/HR	31/ 1	0/ 0	0/ 0	0/ 0													
AUG	SUM	0.000	0.000	0.000	13.182	CMP	0	0	0	0	0	0	0	0	0	0	0	0
	PEAK	0.000	0.000	0.000	0.057	FAN	0	0	0	0	0	0	0	0	0	0	0	0
	DAY/HR	31/ 1	0/ 0	0/ 0	0/ 0													
SEP	SUM	-0.273	47.516	44.323	4.816	CMP	37	27	7	2	2	1	0	0	2	0	0	78
	PEAK	-14.430	2.111	2.102	0.056	FAN	36	27	8	4	1	1	1	0	0	0	0	78
	DAY/HR	22/ 8	0/ 0	23/ 8	0/ 0													
OCT	SUM	-1.252	217.553	205.063	4.778	CMP	112	93	40	23	8	8	4	4	1	1	3	297
	PEAK	-17.532	3.016	2.380	0.074	FAN	110	104	41	21	11	5	2	1	2	0	0	297
	DAY/HR	21/ 8	0/ 0	21/ 8	0/ 0													
NOV	SUM	-4.124	679.801	648.998	17.037	CMP	58	91	102	82	69	75	42	23	15	5	15	577
	PEAK	-20.693	3.919	2.495	0.090	FAN	58	105	127	102	81	54	28	13	3	3	3	577
	DAY/HR	26/ 8	0/ 0	30/ 8	0/ 0													
DEC	SUM	-6.934	1254.878	1154.847	31.495	CMP	11	19	48	102	90	100	109	76	39	29	86	709
	PEAK	-25.461	6.284	2.611	0.090	FAN	15	28	107	136	109	125	53	47	29	19	41	709
	DAY/HR	9/ 8	0/ 0	13/ 8	0/ 0													
YR	SUM	-35.500	6457.068	5024.282	203.749	CMP	510	481	504	492	423	394	301	206	151	138	444	4044
	PEAK	-26.144	7.031	2.611	0.090	FAN	502	554	715	606	459	369	188	174	133	100	405	4205
	MON/DAY	0/ 0	0/ 0	12/13	0/ 0													

SINGLE FAMILY RESIDENCE — CONVENTIONAL DESIGN — DOE-2.1E-001 Thu Nov 4 15:07:28 1993SDL RUN 1
CUSTOM WEIGHTING FACTORS — 2 zones - living & sleeping — RUN 1: RESYS with on/off heat pump
REPORT- SS-P LOAD, ENERGY AND PART LOAD COOLING IN SYS-1 — WEATHER FILE- TRY CHICAGO

UNIT TYPE is RESYS COOLING-CAPACITY = 24.000 (KBTU/HR) COOLING-EIR = 0.343 (BTU/BTU) SUPPLY-FLOW = 700. (CFM)

MONTH		UNIT LOAD (MBTU) (KBTU/HR)	ENERGY USE (KWH) (KW)	COMPRESSOR (KWH) (KW)	FAN ENERGY (KWH) (KW)		Number of hours within each PART LOAD range 00-10	10-20	20-30	30-40	40-50	50-60	60-70	70-80	80-90	90-100	100+	TOTAL RUN HOURS
JAN	SUM	0.000	0.600	0.000	40.019	CMP	0	0	0	0	0	0	0	0	0	0	0	0
	PEAK	0.000	0.025	0.000	0.090	FAN	0	0	0	0	0	0	0	0	0	0	0	0
	DAY/HR	31/24	0/ 0	0/ 0	0/ 0													
FEB	SUM	0.000	0.500	0.000	35.432	CMP	0	0	0	0	0	0	0	0	0	0	0	0
	PEAK	0.000	0.025	0.000	0.090	FAN	0	0	0	0	0	0	0	0	0	0	0	0
	DAY/HR	28/24	0/ 0	0/ 0	0/ 0													
MAR	SUM	0.000	1.475	0.000	21.055	CMP	0	0	0	0	0	0	0	0	0	0	0	0
	PEAK	0.000	0.025	0.000	0.090	FAN	0	0	0	0	0	0	0	0	0	0	0	0
	DAY/HR	31/24	0/ 0	0/ 0	0/ 0													
APR	SUM	0.117	22.790	21.440	7.099	CMP	27	21	2	0	0	0	0	0	0	0	0	50
	PEAK	5.487	0.678	0.678	0.080	FAN	18	22	10	0	0	0	0	0	0	0	0	50
	DAY/HR	28/15	0/ 0	28/15	0/ 0													
MAY	SUM	0.313	49.293	47.693	3.514	CMP	43	32	18	3	2	0	0	0	0	0	0	98
	PEAK	10.998	1.165	1.165	0.052	FAN	32	32	18	11	3	2	0	0	0	0	0	98
	DAY/HR	21/14	0/ 0	21/14	0/ 0													
JUN	SUM	1.493	200.083	199.958	7.585	CMP	87	112	96	38	4	5	0	0	0	0	0	342
	PEAK	13.441	1.442	1.442	0.058	FAN	63	68	98	67	36	5	5	0	0	0	0	342
	DAY/HR	20/18	0/ 0	20/18	0/ 0													
JUL	SUM	3.616	441.365	441.365	17.734	CMP	104	118	141	133	62	25	7	0	0	0	0	590
	PEAK	15.402	1.743	1.743	0.072	FAN	76	87	88	113	105	76	33	11	1	0	0	590
	DAY/HR	13/17	0/ 0	13/18	0/ 0													
AUG	SUM	2.676	336.878	336.878	13.182	CMP	104	130	145	87	43	3	0	0	0	0	0	512
	PEAK	12.303	1.393	1.393	0.057	FAN	80	88	100	102	83	51	8	0	0	0	0	512
	DAY/HR	26/17	0/ 0	26/17	0/ 0													
SEP	SUM	0.751	108.297	107.197	4.816	CMP	69	68	37	18	6	0	0	0	0	0	0	198
	PEAK	10.882	1.182	1.182	0.056	FAN	54	44	47	27	19	7	0	0	0	0	0	198
	DAY/HR	11/15	0/ 0	11/15	0/ 0													
OCT	SUM	0.051	16.477	14.752	4.778	CMP	42	2	0	0	0	0	0	0	0	0	0	44
	PEAK	2.916	0.468	0.468	0.074	FAN	36	8	0	0	0	0	0	0	0	0	0	44
	DAY/HR	5/16	0/ 0	5/16	0/ 0													
NOV	SUM	0.035	7.546	6.046	17.037	CMP	6	8	0	0	0	0	0	0	0	0	0	14
	PEAK	4.121	0.556	0.556	0.090	FAN	4	5	5	0	0	0	0	0	0	0	0	14
	DAY/HR	2/13	0/ 0	2/13	0/ 0													
DEC	SUM	0.000	0.775	0.000	31.495	CMP	0	0	0	0	0	0	0	0	0	0	0	0
	PEAK	0.000	0.025	0.000	0.090	FAN	0	0	0	0	0	0	0	0	0	0	0	0
	DAY/HR	31/24	0/ 0	0/ 0	0/ 0													
YR	SUM	9.052	1186.083	1175.328	203.749	CMP	482	491	439	279	117	33	7	0	0	0	0	1848
	PEAK	15.402	1.743	1.743	0.090	FAN	363	354	366	320	246	141	46	11	1	0	0	1848
	MON/DAY	0/ 0	0/ 0	7/13	0/ 0													

SINGLE FAMILY RESIDENCE CONVENTIONAL DESIGN DOE-2.1E-001 Thu Nov 4 15:07:28 1993SDL RUN 1
CUSTOM WEIGHTING FACTORS 2 zones - living & sleeping RUN 1: RESYS with on/off heat pump
REPORT- SS-Q HEAT PUMP COOLING SUMMARY FOR SYS-1 WEATHER FILE- TRY CHICAGO

	UNIT RUN TIME (HOURS)	TOTAL LOAD ON UNIT (MBTU)	ENERGY IN TO UNIT (MBTU)	AUXILIARY ENERGY (MBTU)	SUP UNIT LOAD (MBTU)	SUP UNIT ENERGY (MBTU)	WASTE HEAT GENERATED (MBTU)	WASTE HEAT USE (MBTU)		INDOOR FAN ENERGY (MBTU)
JAN	0.	0.000	0.000	0.002	0.000	0.000	0.000	0.000	0.000	0.019
FEB	0.	0.000	0.000	0.002	0.000	0.000	0.000	0.000	0.000	0.004
MAR	0.	0.000	0.000	0.005	0.000	0.000	0.000	0.000	0.000	0.001
APR	5.	0.117	0.073	0.005	0.000	0.000	0.000	0.000	0.000	0.002
MAY	13.	0.313	0.163	0.005	0.000	0.000	0.000	0.000	0.000	0.005
JUN	62.	1.493	0.682	0.000	0.000	0.000	0.000	0.000	0.000	0.026
JUL	151.	3.616	1.506	0.000	0.000	0.000	0.000	0.000	0.000	0.061
AUG	111.	2.676	1.150	0.000	0.000	0.000	0.000	0.000	0.000	0.045
SEP	31.	0.751	0.366	0.004	0.000	0.000	0.000	0.000	0.000	0.013
OCT	2.	0.051	0.050	0.006	0.000	0.000	0.000	0.000	0.000	0.001
NOV	1.	0.035	0.021	0.005	0.000	0.000	0.000	0.000	0.000	0.001
DEC	0.	0.000	0.000	0.003	0.000	0.000	0.000	0.000	0.000	0.000
ANNUAL	377.	9.052	4.011	0.037	0.000	0.000	0.000	0.000	0.000	0.177

CSPF (WITH PARASITICS) = 2.14 (BTU/BTU)

CSPF (WITHOUT PARASITICS) = 2.26 (BTU/BTU)

SINGLE FAMILY RESIDENCE CONVENTIONAL DESIGN DOE-2.1E-001 Thu Nov 4 15:07:28 1993SDL RUN 1
CUSTOM WEIGHTING FACTORS 2 zones - living & sleeping RUN 1: RESYS with on/off heat pump
REPORT- SS-Q HEAT PUMP HEATING SUMMARY FOR SYS-1 WEATHER FILE- TRY CHICAGO

	UNIT RUN TIME (HOURS)	TOTAL LOAD ON UNIT (MBTU)	ENERGY IN TO UNIT (MBTU)	AUXILIARY ENERGY (MBTU)	SUP UNIT LOAD (MBTU)	SUP UNIT ENERGY (MBTU)	WASTE HEAT GENERATED (MBTU)	WASTE HEAT USE (MBTU)	DEFROST LOAD (MBTU)	INDOOR FAN ENERGY (MBTU)
JAN	405.	-5.578	3.198	0.046	-2.974	2.812	0.000	0.000	-0.117	0.118
FEB	433.	-6.132	3.242	0.039	-1.123	0.991	0.000	0.000	-0.093	0.117
MAR	280.	-4.557	2.429	0.064	-0.452	0.340	0.000	0.000	-0.058	0.071
APR	91.	-1.695	0.946	0.040	-0.067	0.004	0.000	0.000	-0.021	0.022
MAY	24.	-0.583	0.308	0.021	-0.021	0.000	0.000	0.000	-0.001	0.007
JUN	1.	-0.024	0.017	0.001	0.000	0.000	0.000	0.000	0.000	0.000
JUL	0.	0.000	0.000	0.000	0.000	0.000	0.000	0.000	0.000	0.000
AUG	0.	0.000	0.000	0.000	0.000	0.000	0.000	0.000	0.000	0.000
SEP	12.	-0.270	0.151	0.010	-0.004	0.000	0.000	0.000	-0.002	0.003
OCT	62.	-1.228	0.700	0.037	-0.038	0.004	0.000	0.000	-0.014	0.015
NOV	244.	-4.068	2.215	0.062	-0.125	0.036	0.000	0.000	-0.069	0.057
DEC	475.	-6.693	3.941	0.052	-0.411	0.278	0.000	0.000	-0.170	0.107
ANNUAL	2027.	-30.828	17.148	0.372	-5.217	4.464	0.000	0.000	-0.545	0.518

HSPF (WITH PARASITICS) = 1.60 (BTU/BTU)

HSPF (WITHOUT PARASITICS) = 1.64 (BTU/BTU)

	----DEMANDS-----		--BASEBOARDS---		--TEMPERATURES--		--LOADS NOT MET--	
MONTH	HEAT EXTRACTION ENERGY (MBTU)	HEAT ADDITION ENERGY (MBTU)	BASEBOARD ENERGY (MBTU)	MAXIMUM BASEBOARD LOAD (KBTU/HR)	MAXIMUM ZONE TEMP (F)	MINIMUM ZONE TEMP (F)	HOURS UNDER HEATED	HOURS UNDER COOLED
JAN	0.00000	-4.135	0.00000	0.000	70.2	59.8	10	0
FEB	0.00000	-3.511	0.00000	0.000	70.3	59.9	3	0
MAR	0.00000	-2.412	0.00000	0.000	77.7	59.9	1	0
APR	0.05158	-0.831	0.00000	0.000	77.9	60.1	0	0
MAY	0.12686	-0.285	0.00000	0.000	78.0	60.2	0	0
JUN	0.63479	-0.012	0.00000	0.000	78.1	64.1	0	0
JUL	1.50851	0.000	0.00000	0.000	78.2	71.7	0	0
AUG	1.12160	0.000	0.00000	0.000	78.1	68.9	0	0
SEP	0.32901	-0.131	0.00000	0.000	78.0	60.2	0	0
OCT	0.02248	-0.599	0.00000	0.000	77.8	60.2	0	0
NOV	0.01657	-2.010	0.00000	0.000	77.9	60.1	0	0
DEC	0.00000	-3.397	0.00000	0.000	70.2	60.0	0	0

TOTAL HOURS AT TEMPERATURE LEVEL AND TIME OF DAY

HOUR	1AM	2	3	4	5	6	7	8	9	10	11	12	1PM	2	3	4	5	6	7	8	9	10	11	12	TOTAL
ABOVE 85	0	0	0	0	0	0	0	0	0	0	0	0	0	0	0	0	0	0	0	0	0	0	0	0	0
80-85	0	0	0	0	0	0	0	0	0	0	0	0	0	0	0	0	0	0	0	0	0	0	0	0	0
75-80	77	65	49	42	42	48	73	77	87	97	119	133	149	153	160	159	159	149	149	146	140	133	128	100	2634
70-75	59	61	66	61	56	52	103	180	204	212	207	204	191	185	178	177	178	184	181	190	195	170	36	49	3379
65-70	37	37	42	41	44	47	17	105	74	56	39	28	25	27	27	29	28	32	35	29	30	60	58	46	993
60-65	183	193	198	210	210	205	160	3	0	0	0	0	0	0	0	0	0	0	0	0	0	2	143	168	1675
BELOW 60	9	9	10	11	13	13	12	0	0	0	0	0	0	0	0	0	0	0	0	0	0	0	0	2	79

	----DEMANDS-----		--BASEBOARDS---		--TEMPERATURES--		--LOADS NOT MET--	
MONTH	HEAT EXTRACTION ENERGY (MBTU)	HEAT ADDITION ENERGY (MBTU)	BASEBOARD ENERGY (MBTU)	MAXIMUM BASEBOARD LOAD (KBTU/HR)	MAXIMUM ZONE TEMP (F)	MINIMUM ZONE TEMP (F)	HOURS UNDER HEATED	HOURS UNDER COOLED
JAN	0.00000	-4.276	-0.16217	-1.402	69.7	60.1	0	0
FEB	0.00000	-3.631	-0.13177	-1.245	70.0	60.1	0	0
MAR	0.00000	-2.512	-0.11287	-1.254	74.4	60.1	0	0
APR	0.04350	-0.870	-0.06374	-1.141	75.9	60.1	0	0
MAY	0.10750	-0.303	-0.02104	-0.883	75.5	60.2	0	0
JUN	0.54882	-0.013	0.00000	0.000	76.2	63.1	0	0
JUL	1.33571	0.000	0.00000	0.000	76.8	70.0	0	0
AUG	0.98452	0.000	0.00000	0.000	76.8	67.3	0	0
SEP	0.28617	-0.138	-0.00436	-0.634	76.7	60.2	0	0
OCT	0.01912	-0.628	-0.03434	-0.666	76.0	60.2	0	0
NOV	0.01396	-2.088	-0.08962	-1.106	75.8	60.1	0	0
DEC	0.00000	-3.517	-0.13335	-1.208	69.4	60.1	0	0

TOTAL HOURS AT TEMPERATURE LEVEL AND TIME OF DAY

HOUR	1AM	2	3	4	5	6	7	8	9	10	11	12	1PM	2	3	4	5	6	7	8	9	10	11	12	TOTAL
ABOVE 85	0	0	0	0	0	0	0	0	0	0	0	0	0	0	0	0	0	0	0	0	0	0	0	0	0
80-85	0	0	0	0	0	0	0	0	0	0	0	0	0	0	0	0	0	0	0	0	0	0	0	0	0
75-80	44	36	30	26	26	26	0	5	8	7	0	17	37	68	95	115	120	119	107	90	78	58	40	54	1206
70-75	78	71	68	64	61	55	86	86	88	100	129	124	123	102	80	62	53	51	60	70	75	88	103	78	1955
65-70	40	48	47	47	46	51	105	264	267	257	236	224	205	195	190	188	192	195	198	205	212	206	44	39	3701
60-65	203	210	220	228	232	233	174	10	2	1	0	0	0	0	0	0	0	0	0	0	0	13	178	194	1898
BELOW 60	0	0	0	0	0	0	0	0	0	0	0	0	0	0	0	0	0	0	0	0	0	0	0	0	0

EQUIPMENT	SIZE (MBTU/H)	NUMBER INSTD	NUMBER AVAIL	SIZE (MBTU/H)	NUMBER INSTD	NUMBER AVAIL	SIZE (MBTU/H)	NUMBER INSTD	NUMBER AVAIL	SIZE (MBTU/H)	NUMBER INSTD	NUMBER AVAIL	SIZE (MBTU/H)	NUMBER INSTD	NUMBER AVAIL

SINGLE FAMILY RESIDENCE — CONVENTIONAL DESIGN — DOE-2.1E-001 Thu Nov 4 15:07:28 1993PDL RUN 1
CUSTOM WEIGHTING FACTORS — 2 zones - living & sleeping — RUN 1: RESYS with on/off heat pump
REPORT- PS-B MONTHLY UTILITY AND FUEL USE SUMMARY — WEATHER FILE- TRY CHICAGO

MONTH	BTU/UNIT:	ELECTRICITY METER-1 3413./KWH
JAN		
ENERGY CONSUMPTION (UNITS/MO)		3352.9
PEAK DEMAND (UNITS/HR OR DAY)		14.2
	PEAK DAY/HR	12/ 8
FEB		
ENERGY CONSUMPTION (UNITS/MO)		2695.4
PEAK DEMAND (UNITS/HR OR DAY)		14.3
	PEAK DAY/HR	4/ 8
MAR		
ENERGY CONSUMPTION (UNITS/MO)		2368.2
PEAK DEMAND (UNITS/HR OR DAY)		14.2
	PEAK DAY/HR	24/ 8
APR		
ENERGY CONSUMPTION (UNITS/MO)		1716.0
PEAK DEMAND (UNITS/HR OR DAY)		10.0
	PEAK DAY/HR	8/ 8
MAY		
ENERGY CONSUMPTION (UNITS/MO)		1504.5
PEAK DEMAND (UNITS/HR OR DAY)		8.3
	PEAK DAY/HR	6/ 8
JUN		
ENERGY CONSUMPTION (UNITS/MO)		1451.5
PEAK DEMAND (UNITS/HR OR DAY)		6.7
	PEAK DAY/HR	30/ 8
JUL		
ENERGY CONSUMPTION (UNITS/MO)		1680.4
PEAK DEMAND (UNITS/HR OR DAY)		6.5
	PEAK DAY/HR	3/ 8
AUG		
ENERGY CONSUMPTION (UNITS/MO)		1551.8
PEAK DEMAND (UNITS/HR OR DAY)		6.1
	PEAK DAY/HR	16/ 8
SEP		
ENERGY CONSUMPTION (UNITS/MO)		1344.2
PEAK DEMAND (UNITS/HR OR DAY)		7.9
	PEAK DAY/HR	23/ 8
OCT		
ENERGY CONSUMPTION (UNITS/MO)		1522.7
PEAK DEMAND (UNITS/HR OR DAY)		9.1
	PEAK DAY/HR	21/ 8
NOV		
ENERGY CONSUMPTION (UNITS/MO)		2044.1
PEAK DEMAND (UNITS/HR OR DAY)		10.5
	PEAK DAY/HR	14/ 8
DEC		
ENERGY CONSUMPTION (UNITS/MO)		2780.0
PEAK DEMAND (UNITS/HR OR DAY)		13.2
	PEAK DAY/HR	9/ 8
TOTAL		
ENERGY CONSUMPTION (UNITS/YR)		24011.8
PEAK DEMAND (UNITS/HR OR DAY)		14.3

ELECTRICAL LOADS	KWH SUPPLIED	PCT OF TOTAL LOAD
ELECTRICITY	24011.8	100.0
LOAD SATISFIED	24011.8	100.0
TOTAL LOAD ON PLANT	24011.7	

SUMMARY OF LOADS MET

TYPE OF LOAD	TOTAL LOAD (MBTU)	LOAD SATISFIED (MBTU)	TOTAL OVERLOAD (MBTU)	PEAK OVERLOAD (MBTU)	HOURS OVERLOADED
ELECTRICAL LOADS	82.0	82.0	0.000	0.000	0

ENERGY TYPE: ELECTRICITY
UNITS: MBTU

CATEGORY OF USE	
SOURCE USES	19.2
SPACE HEAT	14.4
SPACE COOL	4.0
PUMPS & MISC	0.4
VENT FANS	0.7
SUPPLMT HEAT	8.5
DOMHOT WATER	34.7
TOTAL	81.9

TOTAL SITE ENERGY	81.95 MBTU	69.7 KBTU/SQFT-YR GROSS-AREA	69.7 KBTU/SQFT-YR NET-AREA
TOTAL SOURCE ENERGY	245.87 MBTU	209.1 KBTU/SQFT-YR GROSS-AREA	209.1 KBTU/SQFT-YR NET-AREA

PERCENT OF HOURS ANY SYSTEM ZONE OUTSIDE OF THROTTLING RANGE = 0.2
PERCENT OF HOURS ANY PLANT LOAD NOT SATISFIED = 0.0

NOTE: ENERGY IS APPORTIONED HOURLY TO ALL END-USE CATEGORIES.

SINGLE FAMILY RESIDENCE
CUSTOM WEIGHTING FACTORS
REPORT- ES-D ENERGY COST SUMMARY

CONVENTIONAL DESIGN
2 zones - living & sleeping

DOE-2.1E-001 Thu Nov 4 15:07:28 1993EDL RUN 1
RUN 1: RESYS with on/off heat pump

UTILITY-RATE	RESOURCE	METERS	METERED ENERGY UNITS/YR	TOTAL CHARGE ($)	VIRTUAL RATE ($/UNIT)	RATE USED ALL YEAR?
ELEC-COST	ELECTRICITY	1 2 3 4 5	24012. KWH	1969.	0.0820	YES
GAS-COST	NATURAL-GAS	1 2 3 4 5	0. THERM	0.	0.0000	YES
				==========		
				1969.		

ENERGY COST/GROSS BLDG AREA: 1.67
ENERGY COST/NET BLDG AREA: 1.67

S D L P R O C E S S O R I N P U T D A T A

Thu Nov 4 15:07:28 1993SDL RUN 2

```
* 248 *
* 249 * TITLE     LINE-5 *RUN 2: RESVVT with var spd ht pump *  ..
* 250 *
* 251 *           SYSTEMS-REPORT      SUMMARY=(SS-A,SS-H,SS-F,SS-O)  ..
* 252 *
* 253 * $         The house is conditioned by a central 2 ton variable speed heat pump.
* 254 * $         Thermostats in each zone control individual zone air dampers.  The
* 255 * $         thermostat set points in each zone are set to take advantage of the
* 256 * $         occupancy patterns in the house.  A heat exchanger downstream from
* 257 * $         the compressor allows part of the refrigerant superheat to be used for
* 258 * $         heating domestic hot water.
* 259 *
* 260 *                     $ -----SCHEDULES----- $
* 261 *
* 262 * HEAT-1    =SCHEDULE      THRU DEC 31 (ALL) (1,7)(60)   $ living area heating
* 263 *                                            (8,22)(70)  $ set point
* 264 *                                            (23,24)(60) ..
* 265 * HEAT-2    =SCHEDULE      THRU DEC 31 (ALL) (1,24)(60)  .. $ bedroom heat setpt
* 266 *
* 267 * COOL-1    =SCHEDULE      THRU DEC 31 (ALL) (1,7)(85)   $ living area cooling
* 268 *                                            (8,22)(78)  $ set point
* 269 *                                            (23,24)(85) ..
* 270 * COOL-2    =SCHEDULE      THRU DEC 31 (ALL) (1,7)(78)   $ bedroom cooling set
* 271 *                                            (8,22)(80)  $ point
* 272 *                                            (23,24)(78) ..
* 273 *
* 274 *                       $ -----Living zone------ $
* 275 *
* 276 * ZONE-1    =ZONE          DESIGN-HEAT-T=70  DESIGN-COOL-T=78
* 277 *                          THROTTLING-RANGE=0.2
* 278 *                          ZONE-TYPE=CONDITIONED
* 279 *                          ASSIGNED-CFM=700        $ Each zone can receive the
* 280 *                          HEAT-TEMP-SCH=HEAT-1    $ full system cfm.
* 281 *                          COOL-TEMP-SCH=COOL-1 ..
* 282 *
* 283 *                       $ -----Sleeping zone------ $
* 284 *
* 285 * ZONE-2    =ZONE          LIKE ZONE-1  HEAT-TEMP-SCH=HEAT-2
* 286 *                          COOL-TEMP-SCH=COOL-2 ..
* 287 *
* 288 *           $ -----HEAT PUMP AND CENTRAL SYSTEM PARAMETERS----- $
* 289 *
* 290 * SYS-1     =SYSTEM        SYSTEM-TYPE=RESVVT          ZONE-NAMES=(ZONE-1,ZONE-2)
* 291 *                          HEAT-SOURCE=HEAT-PUMP       SUPPLY-CFM=700
* 292 *                          COOLING-CAPACITY=24000      HP-SUPP-HT-CAP=-24000.
* 293 *                          COOL-SH-CAP=16000
* 294 *                          MAX-SUPPLY-T=105            MIN-SUPPLY-T=57
* 295 *                          COOLING-EIR=.343            HEATING-EIR=.306
* 296 *                          HP-SUPP-SOURCE=ELECTRIC     MAX-HP-SUPP-T=40.
* 297 *                          HEAT-WASTE-HEAT=0.  ..  $ no heat recovery in heating
* 298 *                                                  $ mode
* 299 *
* 300 * PLANT1 = PLANT-ASSIGNMENT  SYSTEM-NAMES = (SYS-1)
* 301 *                           DHW-TYPE=ELECTRIC
* 302 *                           DHW-GAL/MIN  = .375
```

```
* 303 *                          DHW-SCH       = DHWSCH-1 ..
* 304 *
* 305 * DHWSCH-1  =SCHEDULE      THRU DEC 31 (ALL)
* 306 *                          (1,7)(0)(8,9)(1.0)(10,12)(0)(13,14)(.05)
* 307 *                          (15,17)(0)(18,21)(.67)(22,24)(0) ..
* 308 *
* 309 * END ..
* 310 * COMPUTE SYSTEMS ..
* 311 * INPUT PLANT ..
```

P D L P R O C E S S O R I N P U T D A T A

Thu Nov 4 15:07:28 1993PDL RUN 2

```
* 312 * PLANT1 = PLANT-ASSIGNMENT  ..
* 313 *
* 314 *          PLANT-REPORT        SUMMARY=(BEPS,PS-B) ..
* 315 *
* 316 * END ..
* 317 * COMPUTE PLANT ..
* 318 *
* 319 * INPUT ECONOMICS  ..
```

E D L P R O C E S S O R I N P U T D A T A

Thu Nov 4 15:07:28 1993EDL RUN 2

```
* 320 * ECONOMICS-REPORT  SUMMARY=(ES-D)  ..
* 321 *
* 322 * ELEC-COST  = UTILITY-RATE  RESOURCE = ELECTRICITY
* 323 *             BLOCK-CHARGES = (ELCOST)  ..
* 324 *
* 325 * ELCOST     = BLOCK-CHARGE  BLOCK1-TYPE = ENERGY
* 326 *             BLOCK1-DATA = (800,.065,400,.080,1,.10)  ..
* 327 *
* 328 * GAS-COST   = UTILITY-RATE  RESOURCE = NATURAL-GAS
* 329 *                            ENERGY-CHG = .55  ..
* 330 * END  ..
* 331 * COMPUTE ECONOMICS  ..
* 332 *
* 333 * INPUT SYSTEMS ..
```

SYSTEM NAME	SYSTEM TYPE	ALTITUDE MULTIPLIER	FLOOR AREA (SQFT)	MAX PEOPLE
SYS-1	RESVVT	1.000	1176.0	0.

SUPPLY FAN (CFM)	ELEC (KW)	DELTA-T (F)	RETURN FAN (CFM)	ELEC (KW)	DELTA-T (F)	OUTSIDE AIR RATIO	COOLING CAPACITY (KBTU/HR)	SENSIBLE (SHR)	HEATING CAPACITY (KBTU/HR)	COOLING EIR (BTU/BTU)	HEATING EIR (BTU/BTU)	HEAT PUMP SUPP-HEAT (KBTU/HR)
700.	0.112	0.4	0.	0.000	0.0	0.000	24.000	0.667	-26.902	0.34	0.31	-24.000

ZONE NAME	SUPPLY FLOW (CFM)	EXHAUST FLOW (CFM)	FAN (KW)	MINIMUM FLOW RATIO	OUTSIDE AIR FLOW (CFM)	COOLING CAPACITY (KBTU/HR)	SENSIBLE (SHR)	EXTRACTION RATE (KBTU/HR)	HEATING CAPACITY (KBTU/HR)	ADDITION RATE (KBTU/HR)	MULTIPLIER
ZONE-1	700.	0.	0.000	0.001	0.	0.00	0.00	15.66	0.00	-26.46	1.0
ZONE-2	700.	0.	0.000	0.001	0.	0.00	0.00	15.66	0.00	-26.46	1.0

SINGLE FAMILY RESIDENCE CONVENTIONAL DESIGN DOE-2.1E-001 Thu Nov 4 15:07:28 1993SDL RUN 2
CUSTOM WEIGHTING FACTORS 2 zones - living & sleeping RUN 2: RESVVT with var spd ht pump
REPORT- SS-P LOAD, ENERGY AND PART LOAD DHW TANK OPERATION FOR PLANT1 WEATHER FILE- TRY CHICAGO

TANK SIZE is 30.0 (GAL) HEATER CAP = 25.774 (KBTU/HR) FLOW RATE = 0.375 (GAL/MIN) PUMP = 0.000 (KW)

MONTH	SUM PEAK	UNIT LOAD (MBTU) (KBTU/HR)	ENERGY USE (KWH) (KW)	RCV EN USE (KWH) (KW)	PUMP ENERGY (KWH) (KW)	Number of hours within each PART LOAD range 00 10	10 20	20 30	30 40	40 50	50 60	60 70	70 80	80 90	90 100	100 +	TOTAL RUN HOURS
JAN	SUM	2.781	978.461	0.000	0.000	558	0	0	0	0	124	0	62	0	0	0	744
	PEAK	18.767	5.719	0.000	0.000												
	DAY/HR	31/ 9	31/ 9	31/24	31/24												
FEB	SUM	2.587	910.286	0.000	0.000	504	0	0	0	0	112	0	56	0	0	0	672
	PEAK	19.330	5.890	0.000	0.000												
	DAY/HR	28/ 9	28/ 9	28/24	28/24												
MAR	SUM	2.809	988.242	0.000	0.000	558	0	0	0	0	124	0	62	0	0	0	744
	PEAK	18.955	5.776	0.000	0.000												
	DAY/HR	31/ 9	31/ 9	31/24	31/24												
APR	SUM	2.584	909.023	0.000	0.000	540	0	0	0	120	0	0	60	0	0	0	720
	PEAK	18.017	5.490	0.000	0.000												
	DAY/HR	30/ 9	30/ 9	30/ 1	30/ 1												
MAY	SUM	2.475	870.824	0.000	0.000	558	0	0	0	124	0	62	0	0	0	0	744
	PEAK	16.703	5.090	0.000	0.000												
	DAY/HR	31/ 9	31/ 9	31/ 1	31/ 1												
JUN	SUM	2.207	776.454	0.000	0.000	540	0	0	0	120	0	60	0	0	0	0	720
	PEAK	15.389	4.689	0.000	0.000												
	DAY/HR	30/ 9	30/ 9	30/ 1	30/ 1												
JUL	SUM	2.114	743.631	0.000	0.000	558	0	0	124	0	62	0	0	0	0	0	744
	PEAK	14.263	4.346	0.000	0.000												
	DAY/HR	31/ 9	31/ 9	31/ 1	31/ 1												
AUG	SUM	2.058	724.058	0.000	0.000	558	0	0	124	0	62	0	0	0	0	0	744
	PEAK	13.888	4.232	0.000	0.000												
	DAY/HR	31/ 9	31/ 9	31/ 1	31/ 1												
SEP	SUM	2.045	719.643	0.000	0.000	540	0	0	120	0	60	0	0	0	0	0	720
	PEAK	14.263	4.346	0.000	0.000												
	DAY/HR	30/ 9	30/ 9	30/ 1	30/ 1												
OCT	SUM	2.253	792.550	0.000	0.000	558	0	0	0	124	0	62	0	0	0	0	744
	PEAK	15.201	4.632	0.000	0.000												
	DAY/HR	31/ 9	31/ 9	31/24	31/24												
NOV	SUM	2.368	833.267	0.000	0.000	540	0	0	0	120	0	60	0	0	0	0	720
	PEAK	16.515	5.033	0.000	0.000												
	DAY/HR	30/ 9	30/ 9	30/24	30/24												
DEC	SUM	2.642	929.540	0.000	0.000	558	0	0	0	124	0	0	62	0	0	0	744
	PEAK	17.829	5.433	0.000	0.000												
	DAY/HR	31/ 9	31/ 9	31/24	31/24												
YR	SUM	28.922	10175.467	0.000	0.000	6570	0	0	368	732	544	244	302	0	0	0	8760
	PEAK	19.330	5.890	0.000	0.000												
	MON/DAY	2/28	2/28	12/31	12/31												

	COOLING						HEATING						ELEC	
MONTH	COOLING ENERGY (MBTU)	TIME OF MAX DY	TIME OF MAX HR	DRY-BULB TEMP	WET-BULB TEMP	MAXIMUM COOLING LOAD (KBTU/HR)	HEATING ENERGY (MBTU)	TIME OF MAX DY	TIME OF MAX HR	DRY-BULB TEMP	WET-BULB TEMP	MAXIMUM HEATING LOAD (KBTU/HR)	ELEC-TRICAL ENERGY (KWH)	MAXIMUM ELEC LOAD (KW)
JAN	0.00000					0.000	-7.629	12	8	-7.F	-7.F	-22.671	1822.	8.123
FEB	0.00000					0.000	-6.413	4	8	7.F	6.F	-20.592	1314.	7.505
MAR	0.00000					0.000	-4.252	24	8	6.F	5.F	-20.654	992.	7.524
APR	0.05743	28	15	78.F	68.F	2.671	-1.407	8	8	30.F	27.F	-12.513	616.	2.657
MAY	0.16748	21	14	85.F	75.F	7.676	-0.423	6	8	37.F	33.F	-8.230	532.	2.143
JUN	0.93065	20	18	91.F	78.F	11.261	-0.011	1	8	50.F	49.F	-1.595	512.	1.713
JUL	2.57592	13	17	97.F	78.F	13.634	0.000					0.000	623.	2.014
AUG	1.80715	26	17	94.F	76.F	10.031	0.000					0.000	573.	1.604
SEP	0.46676	11	15	87.F	72.F	8.689	-0.169	23	8	36.F	34.F	-8.489	507.	2.173
OCT	0.01972	5	16	74.F	62.F	1.380	-0.940	21	8	30.F	29.F	-11.251	580.	2.517
NOV	0.01912	2	13	74.F	61.F	2.095	-3.477	14	8	27.F	26.F	-13.339	831.	2.867
DEC	0.00000					0.000	-6.139	9	8	13.F	12.F	-18.121	1173.	5.013
TOTAL	6.044						-30.860						10075.	
MAX						13.634						-22.671		8.123

SINGLE FAMILY RESIDENCE CONVENTIONAL DESIGN DOE-2.1E-001 Thu Nov 4 15:07:28 1993SDL RUN 2
CUSTOM WEIGHTING FACTORS 2 zones - living & sleeping RUN 2: RESVVT with var spd ht pump
REPORT- SS-H SYSTEM MONTHLY LOADS SUMMARY FOR SYS-1 WEATHER FILE- TRY CHICAGO

	--FAN ELEC---		--FUEL HEAT--		--FUEL COOL--		-ELEC HEAT--		-ELEC COOL--	
MONTH	FAN ENERGY (KWH)	MAXIMUM FAN LOAD (KW)	GAS OIL ENERGY (MBTU)	MAXIMUM GAS OIL LOAD (KBTU/HR)	GAS OIL ENERGY (MBTU)	MAXIMUM GAS OIL LOAD (KBTU/HR)	ELECTRIC ENERGY (KWH)	MAXIMUM ELECTRIC LOAD (KW)	ELECTRIC ENERGY (KWH)	MAXIMUM ELECTRIC LOAD (KW)
JAN	38.	0.111	0.000	0.000	0.000	0.000	1303.	6.668	3.	0.025
FEB	34.	0.111	0.000	0.000	0.000	0.000	848.	6.058	1.	0.025
MAR	14.	0.111	0.000	0.000	0.000	0.000	500.	6.077	0.	0.025
APR	3.	0.071	0.000	0.000	0.000	0.000	147.	1.264	3.	0.167
MAY	1.	0.027	0.000	0.000	0.000	0.000	44.	0.797	9.	0.405
JUN	2.	0.044	0.000	0.000	0.000	0.000	1.	0.178	46.	0.685
JUL	7.	0.063	0.000	0.000	0.000	0.000	0.	0.000	138.	1.044
AUG	5.	0.036	0.000	0.000	0.000	0.000	0.	0.000	90.	0.640
SEP	1.	0.030	0.000	0.000	0.000	0.000	19.	0.824	25.	0.474
OCT	2.	0.058	0.000	0.000	0.000	0.000	99.	1.137	2.	0.066
NOV	9.	0.095	0.000	0.000	0.000	0.000	358.	1.450	1.	0.102
DEC	24.	0.111	0.000	0.000	0.000	0.000	672.	3.585	0.	0.000
TOTAL	141.		0.000		0.000		3991.		319.	
MAX		0.111		0.000		0.000		6.668		1.044

SINGLE FAMILY RESIDENCE CONVENTIONAL DESIGN DOE-2.1E-001 Thu Nov 4 15:07:28 1993SDL RUN 2
CUSTOM WEIGHTING FACTORS 2 zones - living & sleeping RUN 2: RESVVT with var spd ht pump
REPORT- SS-P LOAD, ENERGY AND PART LOAD HEATING IN SYS-1 WEATHER FILE- TRY CHICAGO

UNIT TYPE is RESVVT HEATING-CAPACITY = -26.902 (KBTU/HR) HEATING-EIR = 0.306 (BTU/BTU) SUPPLY-FLOW = 700. (CFM)

MONTH	SUM PEAK	UNIT LOAD (MBTU) (KBTU/HR)	ENERGY USE (KWH) (KW)	COMPRESSOR (KWH) (KW)	FAN ENERGY (KWH) (KW)		00 10	10 20	20 30	30 40	40 50	50 60	60 70	70 80	80 90	90 100	100 +	TOTAL RUN HOURS
JAN	SUM	-7.629	1303.220	592.846	38.354	CMP	15	52	52	109	135	62	25	27	19	30	92	618
	PEAK	-22.671	6.668	1.777	0.111	FAN	14	52	75	106	115	55	27	23	26	251	0	744
	DAY/HR	12/ 8	0/ 0	8/12	0/ 0													
FEB	SUM	-6.413	847.956	661.552	33.792	CMP	24	60	48	65	74	61	77	67	66	29	73	644
	PEAK	-20.592	6.058	1.824	0.111	FAN	19	61	64	60	75	54	60	64	49	165	0	671
	DAY/HR	4/ 8	0/ 0	6/ 8	0/ 0													
MAR	SUM	-4.252	500.242	426.469	13.923	CMP	91	148	108	140	103	31	16	5	8	7	31	688
	PEAK	-20.654	6.077	1.778	0.111	FAN	90	145	130	144	81	36	5	11	7	47	0	696
	DAY/HR	24/ 8	0/ 0	23/ 8	0/ 0													
APR	SUM	-1.407	146.960	140.038	3.031	CMP	149	99	66	35	29	6	1	1	0	0	0	386
	PEAK	-12.513	1.264	1.264	0.071	FAN	141	108	70	35	24	4	3	1	0	0	0	386
	DAY/HR	8/ 8	0/ 0	8/ 8	0/ 0													
MAY	SUM	-0.423	43.890	38.829	1.072	CMP	123	47	14	3	2	0	0	0	0	0	0	189
	PEAK	-8.230	0.797	0.797	0.027	FAN	120	49	15	3	2	0	0	0	0	0	0	189
	DAY/HR	6/ 8	0/ 0	6/ 8	0/ 0													
JUN	SUM	-0.011	1.073	0.908	2.280	CMP	11	0	0	0	0	0	0	0	0	0	0	11
	PEAK	-1.595	0.178	0.137	0.044	FAN	11	0	0	0	0	0	0	0	0	0	0	11
	DAY/HR	1/ 8	0/ 0	1/ 8	0/ 0													
JUL	SUM	0.000	0.000	0.000	7.440	CMP	0	0	0	0	0	0	0	0	0	0	0	0
	PEAK	0.000	0.000	0.000	0.063	FAN	0	0	0	0	0	0	0	0	0	0	0	0
	DAY/HR	31/ 1	0/ 0	0/ 0	0/ 0													
AUG	SUM	0.000	0.000	0.000	4.629	CMP	0	0	0	0	0	0	0	0	0	0	0	0
	PEAK	0.000	0.000	0.000	0.036	FAN	0	0	0	0	0	0	0	0	0	0	0	0
	DAY/HR	31/ 1	0/ 0	0/ 0	0/ 0													
SEP	SUM	-0.169	18.503	15.942	1.413	CMP	46	19	5	1	2	0	0	0	0	0	0	73
	PEAK	-8.489	0.824	0.824	0.030	FAN	43	24	2	2	2	0	0	0	0	0	0	73
	DAY/HR	23/ 8	0/ 0	23/ 8	0/ 0													
OCT	SUM	-0.940	98.617	90.816	1.877	CMP	165	81	38	19	13	1	2	0	0	0	0	319
	PEAK	-11.251	1.137	1.137	0.058	FAN	151	96	37	26	3	3	1	2	0	0	0	319
	DAY/HR	21/ 8	0/ 0	21/ 8	0/ 0													
NOV	SUM	-3.477	358.398	350.825	9.388	CMP	114	131	98	106	91	60	22	4	2	0	0	628
	PEAK	-13.339	1.450	1.450	0.095	FAN	111	121	123	109	82	47	24	5	4	2	0	628
	DAY/HR	14/ 8	0/ 0	26/ 8	0/ 0													
DEC	SUM	-6.139	671.799	650.033	23.754	CMP	3	54	69	175	177	103	56	31	27	14	35	744
	PEAK	-18.121	3.585	1.805	0.111	FAN	10	50	90	175	147	102	53	36	22	59	0	744
	DAY/HR	9/ 8	0/ 0	18/ 8	0/ 0													
YR	SUM	-30.860	3990.640	2968.259	140.953	CMP	741	691	498	653	626	324	199	135	122	80	231	4300
	PEAK	-22.671	6.668	1.824	0.111	FAN	710	706	606	660	531	301	173	142	108	524	0	4461
	MON/DAY	0/ 0	0/ 0	2/ 6	0/ 0													

SINGLE FAMILY RESIDENCE CONVENTIONAL DESIGN DOE-2.1E-001 Thu Nov 4 15:07:28 1993SDL RUN 2
CUSTOM WEIGHTING FACTORS 2 zones - living & sleeping RUN 2: RESVVT with var spd ht pump
REPORT- SS-P LOAD, ENERGY AND PART LOAD COOLING IN SYS-1 WEATHER FILE- TRY CHICAGO

UNIT TYPE is RESVVT COOLING-CAPACITY = 24.000 (KBTU/HR) COOLING-EIR = 0.343 (BTU/BTU) SUPPLY-FLOW = 700. (CFM)

MONTH		UNIT LOAD (MBTU) / PEAK (KBTU/HR)	ENERGY USE (KWH) (KW)	COMPRESSOR (KWH) (KW)	FAN ENERGY (KWH) (KW)		Number of hours within each PART LOAD range 00-10	10-20	20-30	30-40	40-50	50-60	60-70	70-80	80-90	90-100	100 +	TOTAL RUN HOURS
JAN	SUM	0.000	3.150	0.000	38.354	CMP	0	0	0	0	0	0	0	0	0	0	0	0
	PEAK	0.000	0.025	0.000	0.111	FAN	0	0	0	0	0	0	0	0	0	0	0	0
	DAY/HR	31/24	0/ 0	0/ 0	0/ 0													
FEB	SUM	0.000	0.675	0.000	33.792	CMP	0	0	0	0	0	0	0	0	0	0	0	0
	PEAK	0.000	0.025	0.000	0.111	FAN	0	0	0	0	0	0	0	0	0	0	0	0
	DAY/HR	28/24	0/ 0	0/ 0	0/ 0													
MAR	SUM	0.000	0.475	0.000	13.923	CMP	0	0	0	0	0	0	0	0	0	0	0	0
	PEAK	0.000	0.025	0.000	0.111	FAN	0	0	0	0	0	0	0	0	0	0	0	0
	DAY/HR	31/24	0/ 0	0/ 0	0/ 0													
APR	SUM	0.057	3.366	2.816	3.031	CMP	39	5	0	0	0	0	0	0	0	0	0	44
	PEAK	2.671	0.167	0.167	0.071	FAN	32	12	0	0	0	0	0	0	0	0	0	44
	DAY/HR	28/15	0/ 0	27/17	0/ 0													
MAY	SUM	0.167	8.939	7.614	1.072	CMP	61	17	5	0	0	0	0	0	0	0	0	83
	PEAK	7.676	0.405	0.405	0.027	FAN	46	23	9	4	1	0	0	0	0	0	0	83
	DAY/HR	21/14	0/ 0	21/14	0/ 0													
JUN	SUM	0.931	46.431	46.306	2.280	CMP	172	104	42	3	3	0	0	0	0	0	0	324
	PEAK	11.261	0.685	0.685	0.044	FAN	109	106	61	35	7	5	1	0	0	0	0	324
	DAY/HR	20/18	0/ 0	20/18	0/ 0													
JUL	SUM	2.576	137.547	137.547	7.440	CMP	208	139	132	65	29	8	0	0	0	0	0	581
	PEAK	13.634	1.044	1.044	0.063	FAN	141	120	89	96	74	43	15	3	0	0	0	581
	DAY/HR	13/17	0/ 0	13/18	0/ 0													
AUG	SUM	1.807	90.252	90.252	4.629	CMP	208	145	101	41	1	0	0	0	0	0	0	496
	PEAK	10.031	0.640	0.640	0.036	FAN	136	128	92	76	52	12	0	0	0	0	0	496
	DAY/HR	26/17	0/ 0	26/17	0/ 0													
SEP	SUM	0.467	24.540	23.465	1.413	CMP	127	37	23	3	0	0	0	0	0	0	0	190
	PEAK	8.689	0.474	0.474	0.030	FAN	89	51	27	17	6	0	0	0	0	0	0	190
	DAY/HR	11/15	0/ 0	11/15	0/ 0													
OCT	SUM	0.020	2.171	0.921	1.877	CMP	31	0	0	0	0	0	0	0	0	0	0	31
	PEAK	1.380	0.066	0.066	0.058	FAN	31	0	0	0	0	0	0	0	0	0	0	31
	DAY/HR	5/16	0/ 0	5/16	0/ 0													
NOV	SUM	0.019	1.232	0.907	9.388	CMP	15	0	0	0	0	0	0	0	0	0	0	15
	PEAK	2.095	0.102	0.102	0.095	FAN	10	5	0	0	0	0	0	0	0	0	0	15
	DAY/HR	2/13	0/ 0	2/13	0/ 0													
DEC	SUM	0.000	0.000	0.000	23.754	CMP	0	0	0	0	0	0	0	0	0	0	0	0
	PEAK	0.000	0.000	0.000	0.111	FAN	0	0	0	0	0	0	0	0	0	0	0	0
	DAY/HR	31/24	0/ 0	0/ 0	0/ 0													
YR	SUM	6.044	318.778	309.828	140.953	CMP	861	447	303	112	33	8	0	0	0	0	0	1764
	PEAK	13.634	1.044	1.044	0.111	FAN	594	445	278	228	140	60	16	3	0	0	0	1764
	MON/DAY	0/ 0	0/ 0	7/13	0/ 0													

	UNIT RUN TIME (HOURS)	TOTAL LOAD ON UNIT (MBTU)	ENERGY IN TO UNIT (MBTU)	AUXILIARY ENERGY (MBTU)	SUP UNIT LOAD (MBTU)	SUP UNIT ENERGY (MBTU)	WASTE HEAT GENERATED (MBTU)	WASTE HEAT USE (MBTU)		INDOOR FAN ENERGY (MBTU)
JAN	0.	0.000	0.000	0.011	0.000	0.000	0.000	0.000	0.000	0.023
FEB	0.	0.000	0.000	0.002	0.000	0.000	0.000	0.000	0.000	0.005
MAR	0.	0.000	0.000	0.002	0.000	0.000	0.000	0.000	0.000	0.001
APR	7.	0.057	0.010	0.002	0.000	0.000	0.000	0.000	0.000	0.000
MAY	20.	0.167	0.026	0.005	0.000	0.000	0.000	0.000	0.000	0.001
JUN	111.	0.931	0.158	0.000	0.000	0.000	0.000	0.000	0.000	0.008
JUL	294.	2.576	0.469	0.000	0.000	0.000	0.000	0.000	0.000	0.025
AUG	214.	1.807	0.308	0.000	0.000	0.000	0.000	0.000	0.000	0.016
SEP	57.	0.467	0.080	0.004	0.000	0.000	0.000	0.000	0.000	0.004
OCT	2.	0.020	0.003	0.004	0.000	0.000	0.000	0.000	0.000	0.000
NOV	2.	0.019	0.003	0.001	0.000	0.000	0.000	0.000	0.000	0.000
DEC	0.	0.000	0.000	0.000	0.000	0.000	0.000	0.000	0.000	0.000
ANNUAL	708.	6.044	1.057	0.031	0.000	0.000	0.000	0.000	0.000	0.084

CSPF (WITH PARASITICS) = 5.16 (BTU/BTU)

CSPF (WITHOUT PARASITICS) = 5.72 (BTU/BTU)

SINGLE FAMILY RESIDENCE CONVENTIONAL DESIGN DOE-2.1E-001 Thu Nov 4 15:07:28 1993SDL RUN 2
CUSTOM WEIGHTING FACTORS 2 zones - living & sleeping RUN 2: RESVVT with var spd ht pump
REPORT- SS-Q HEAT PUMP HEATING SUMMARY FOR SYS-1 WEATHER FILE- TRY CHICAGO

	UNIT RUN TIME (HOURS)	TOTAL LOAD ON UNIT (MBTU)	ENERGY IN TO UNIT (MBTU)	AUXILIARY ENERGY (MBTU)	SUP UNIT LOAD (MBTU)	SUP UNIT ENERGY (MBTU)	WASTE HEAT GENERATED (MBTU)	WASTE HEAT USE (MBTU)	DEFROST LOAD (MBTU)	INDOOR FAN ENERGY (MBTU)
JAN	573.	-5.573	2.023	0.018	-2.407	2.407	0.000	0.000	-0.351	0.108
FEB	589.	-6.128	2.258	0.011	-0.625	0.625	0.000	0.000	-0.340	0.110
MAR	521.	-4.324	1.456	0.024	-0.228	0.228	0.000	0.000	-0.300	0.046
APR	201.	-1.506	0.478	0.024	0.000	0.000	0.000	0.000	-0.100	0.010
MAY	57.	-0.433	0.133	0.017	0.000	0.000	0.000	0.000	-0.009	0.002
JUN	1.	-0.011	0.003	0.001	0.000	0.000	0.000	0.000	0.000	0.000
JUL	0.	0.000	0.000	0.000	0.000	0.000	0.000	0.000	0.000	0.000
AUG	0.	0.000	0.000	0.000	0.000	0.000	0.000	0.000	0.000	0.000
SEP	23.	-0.176	0.054	0.009	0.000	0.000	0.000	0.000	-0.007	0.001
OCT	131.	-0.987	0.310	0.027	0.000	0.000	0.000	0.000	-0.047	0.006
NOV	457.	-3.729	1.197	0.026	0.000	0.000	0.000	0.000	-0.252	0.032
DEC	706.	-6.546	2.219	0.006	-0.068	0.068	0.000	0.000	-0.475	0.081
ANNUAL	3260.	-29.413	10.131	0.162	-3.327	3.327	0.000	0.000	-1.880	0.397

HSPF (WITH PARASITICS) = 2.23 (BTU/BTU)

HSPF (WITHOUT PARASITICS) = 2.29 (BTU/BTU)

	----DEMANDS-----		---BASEBOARDS---		---TEMPERATURES---		---LOADS NOT MET---	
MONTH	HEAT EXTRACTION ENERGY (MBTU)	HEAT ADDITION ENERGY (MBTU)	BASEBOARD ENERGY (MBTU)	MAXIMUM BASEBOARD LOAD (KBTU/HR)	MAXIMUM ZONE TEMP (F)	MINIMUM ZONE TEMP (F)	HOURS UNDER HEATED	HOURS UNDER COOLED
JAN	0.00000	-4.406	0.00000	0.000	70.1	59.9	10	0
FEB	0.00000	-3.746	0.00000	0.000	70.1	59.9	2	0
MAR	0.00000	-2.637	0.00000	0.000	70.1	59.9	1	0
APR	0.05470	-0.920	0.00000	0.000	77.9	60.0	0	0
MAY	0.13653	-0.321	0.00000	0.000	80.1	60.0	0	0
JUN	0.67623	-0.011	0.00000	0.000	83.3	70.1	0	0
JUL	1.50671	0.000	0.00000	0.000	85.0	77.9	0	0
AUG	1.16795	0.000	0.00000	0.000	84.1	77.9	0	0
SEP	0.35392	-0.143	0.00000	0.000	81.9	60.1	0	0
OCT	0.01906	-0.673	0.00000	0.000	77.9	60.0	0	0
NOV	0.01900	-2.213	0.00000	0.000	77.9	60.0	1	0
DEC	0.00000	-3.657	0.00000	0.000	70.1	59.9	2	0

TOTAL HOURS AT TEMPERATURE LEVEL AND TIME OF DAY

HOUR	1AM	2	3	4	5	6	7	8	9	10	11	12	1PM	2	3	4	5	6	7	8	9	10	11	12	TOTAL
ABOVE 85	0	0	0	0	0	0	0	0	0	0	0	0	0	0	0	0	0	0	0	0	0	0	0	0	0
80-85	24	15	13	8	9	10	0	0	0	0	0	0	0	0	0	0	0	0	0	0	0	68	63	31	241
75-80	0	4	0	1	0	0	44	48	60	78	93	110	120	121	122	124	123	118	116	114	107	7	4	9	1523
70-75	0	0	0	0	0	0	59	105	133	139	131	128	130	129	132	130	135	139	133	142	144	120	0	0	2029
65-70	0	0	0	0	0	0	6	132	95	75	58	45	42	36	38	42	40	42	50	43	44	45	2	1	836
60-65	141	144	147	152	144	149	124	0	0	0	0	0	0	0	0	0	0	0	0	0	0	5	151	140	1297
BELOW 60	31	35	38	38	48	44	43	0	0	0	0	0	0	0	0	0	0	0	0	0	0	0	0	22	299

	----DEMANDS-----		--BASEBOARDS---		--TEMPERATURES--		--LOADS NOT MET--	
MONTH	HEAT EXTRACTION ENERGY (MBTU)	HEAT ADDITION ENERGY (MBTU)	BASEBOARD ENERGY (MBTU)	MAXIMUM BASEBOARD LOAD (KBTU/HR)	MAXIMUM ZONE TEMP (F)	MINIMUM ZONE TEMP (F)	HOURS UNDER HEATED	HOURS UNDER COOLED
JAN	0.00000	-3.330	0.00000	0.000	63.1	57.8	4	0
FEB	0.00000	-2.763	0.00000	0.000	65.0	59.9	0	0
MAR	0.00000	-1.656	0.00000	0.000	65.6	59.9	0	0
APR	0.00011	-0.496	0.00000	0.000	79.9	59.9	0	0
MAY	0.01646	-0.106	0.00000	0.000	80.0	60.0	0	0
JUN	0.18752	0.000	0.00000	0.000	80.0	64.1	0	0
JUL	0.83125	0.000	0.00000	0.000	80.0	75.0	0	0
AUG	0.49567	0.000	0.00000	0.000	80.0	73.3	0	0
SEP	0.08770	-0.027	0.00000	0.000	80.0	60.0	0	0
OCT	0.00000	-0.274	0.00000	0.000	77.0	60.0	0	0
NOV	0.00000	-1.291	0.00000	0.000	78.8	59.9	0	0
DEC	0.00000	-2.550	0.00000	0.000	61.9	59.9	0	0

TOTAL HOURS AT TEMPERATURE LEVEL AND TIME OF DAY

HOUR	1AM	2	3	4	5	6	7	8	9	10	11	12	1PM	2	3	4	5	6	7	8	9	10	11	12	TOTAL
ABOVE 85	0	0	0	0	0	0	0	0	0	0	0	0	0	0	0	0	0	0	0	0	0	0	0	0	0
80-85	0	0	0	0	0	0	0	0	0	0	1	5	7	12	14	11	10	9	8	2	0	0	0	0	79
75-80	24	19	13	9	9	10	44	48	60	71	85	93	104	107	107	111	112	108	105	111	106	75	67	40	1638
70-75	0	0	0	0	0	0	0	0	0	7	7	12	9	2	1	2	1	1	3	1	1	0	0	0	47
65-70	0	0	0	0	0	0	9	15	12	4	0	0	3	6	6	11	10	12	10	9	9	2	0	0	118
60-65	141	144	147	152	144	149	176	99	123	136	133	129	128	123	126	122	126	128	126	134	138	124	142	139	3229
BELOW 60	31	35	38	38	48	44	47	123	93	74	56	44	41	36	38	39	39	41	47	42	41	44	11	24	1114

SINGLE FAMILY RESIDENCE
CUSTOM WEIGHTING FACTORS
REPORT- PS-B MONTHLY UTILITY AND FUEL USE SUMMARY

CONVENTIONAL DESIGN
2 zones - living & sleeping

DOE-2.1E-001 Thu Nov 4 15:07:28 1993PDL RUN 2
RUN 2: RESWT with var spd ht pump
WEATHER FILE- TRY CHICAGO

MONTH	BTU/UNIT:	ELECTRICITY METER-1 3413./KWH
JAN		
ENERGY CONSUMPTION (UNITS/MO)		2800.9
PEAK DEMAND (UNITS/HR OR DAY)		13.8
	PEAK DAY/HR	12/ 8
FEB		
ENERGY CONSUMPTION (UNITS/MO)		2224.2
PEAK DEMAND (UNITS/HR OR DAY)		13.4
	PEAK DAY/HR	4/ 8
MAR		
ENERGY CONSUMPTION (UNITS/MO)		1980.6
PEAK DEMAND (UNITS/HR OR DAY)		13.3
	PEAK DAY/HR	24/ 8
APR		
ENERGY CONSUMPTION (UNITS/MO)		1524.7
PEAK DEMAND (UNITS/HR OR DAY)		8.1
	PEAK DAY/HR	8/ 8
MAY		
ENERGY CONSUMPTION (UNITS/MO)		1402.4
PEAK DEMAND (UNITS/HR OR DAY)		7.2
	PEAK DAY/HR	6/ 8
JUN		
ENERGY CONSUMPTION (UNITS/MO)		1288.5
PEAK DEMAND (UNITS/HR OR DAY)		6.2
	PEAK DAY/HR	1/ 8
JUL		
ENERGY CONSUMPTION (UNITS/MO)		1366.3
PEAK DEMAND (UNITS/HR OR DAY)		6.0
	PEAK DAY/HR	3/ 8
AUG		
ENERGY CONSUMPTION (UNITS/MO)		1296.6
PEAK DEMAND (UNITS/HR OR DAY)		5.7
	PEAK DAY/HR	27/ 8
SEP		
ENERGY CONSUMPTION (UNITS/MO)		1226.4
PEAK DEMAND (UNITS/HR OR DAY)		6.5
	PEAK DAY/HR	23/ 8
OCT		
ENERGY CONSUMPTION (UNITS/MO)		1372.9
PEAK DEMAND (UNITS/HR OR DAY)		7.1
	PEAK DAY/HR	21/ 8
NOV		
ENERGY CONSUMPTION (UNITS/MO)		1664.6
PEAK DEMAND (UNITS/HR OR DAY)		7.9
	PEAK DAY/HR	26/ 8
DEC		
ENERGY CONSUMPTION (UNITS/MO)		2102.8
PEAK DEMAND (UNITS/HR OR DAY)		10.4
	PEAK DAY/HR	9/ 8
TOTAL		
ENERGY CONSUMPTION (UNITS/YR)		20250.9
PEAK DEMAND (UNITS/HR OR DAY)		13.8

ELECTRICAL LOADS	KWH SUPPLIED	PCT OF TOTAL LOAD
ELECTRICITY	20250.9	100.0
LOAD SATISFIED	20250.9	100.0
TOTAL LOAD ON PLANT	20250.8	

SUMMARY OF LOADS MET

TYPE OF LOAD	TOTAL LOAD (MBTU)	LOAD SATISFIED (MBTU)	TOTAL OVERLOAD (MBTU)	PEAK OVERLOAD (MBTU)	HOURS OVERLOADED
ELECTRICAL LOADS	69.1	69.1	0.000	0.000	0

ENERGY TYPE: ELECTRICITY
UNITS: MBTU

CATEGORY OF USE	
SOURCE USES	19.2
SPACE HEAT	10.1
SPACE COOL	1.1
PUMPS & MISC	0.2
VENT FANS	0.5
SUPPLMT HEAT	3.3
DOMHOT WATER	34.7
TOTAL	69.1

TOTAL SITE ENERGY	69.11 MBTU	58.8 KBTU/SQFT-YR GROSS-AREA	58.8 KBTU/SQFT-YR NET-AREA
TOTAL SOURCE ENERGY	207.36 MBTU	176.3 KBTU/SQFT-YR GROSS-AREA	176.3 KBTU/SQFT-YR NET-AREA

PERCENT OF HOURS ANY SYSTEM ZONE OUTSIDE OF THROTTLING RANGE = 0.2
PERCENT OF HOURS ANY PLANT LOAD NOT SATISFIED = 0.0

NOTE: ENERGY IS APPORTIONED HOURLY TO ALL END-USE CATEGORIES.

SINGLE FAMILY RESIDENCE
CUSTOM WEIGHTING FACTORS
REPORT- ES-D ENERGY COST SUMMARY

CONVENTIONAL DESIGN
2 zones - living & sleeping

DOE-2.1E-001 Thu Nov 4 15:07:28 1993EDL RUN 2
RUN 2: RESVVT with var spd ht pump

UTILITY-RATE	RESOURCE	METERS	METERED ENERGY UNITS/YR	TOTAL CHARGE ($)	VIRTUAL RATE ($/UNIT)	RATE USED ALL YEAR?
ELEC-COST	ELECTRICITY	1 2 3 4 5	20251. KWH	1593.	0.0787	YES
GAS-COST	NATURAL-GAS	1 2 3 4 5	0. THERM	0.	0.0000	YES
				==========		
				1593.		

ENERGY COST/GROSS BLDG AREA: 1.35
ENERGY COST/NET BLDG AREA: 1.35

S D L P R O C E S S O R I N P U T D A T A

Thu Nov 4 15:07:28 1993SDL RUN 3

```
° 334 °
° 335 ° TITLE     LINE-5 °RUN 3: RESYS with central AC and gas furnace°  ..
° 336 °
° 337 °           SYSTEMS-REPORT     SUMMARY=(SS-A,SS-H,SS-F,SS-O) ..
° 338 °
° 339 ° $                       The house cooled by a conventional central air
° 340 ° $                       conditioner and heated by a gas furnace.
° 341 ° $                       The hot water heater is also gas.
° 342 ° $                       In this climate the furnace is a more
° 343 ° $                       reasonable choice than a heat pump for heating.
° 344 °
° 345 °                     $ -----SCHEDULES----- $
° 346 °
° 347 ° HEAT-1    =SCHEDULE      THRU DEC 31 (ALL) (1,7)(60)
° 348 °                                            (8,22)(70)
° 349 °                                            (23,24)(60) ..
° 350 ° HEAT-2    =SCHEDULE      THRU DEC 31 (ALL) (1,24)(60)  ..
° 351 °
° 352 ° COOL-1    =SCHEDULE      THRU DEC 31 (ALL) (1,24) (78)  ..
° 353 °
° 354 °                       $ -----Living zone------ $
° 355 °
° 356 ° ZONE-1    =ZONE          DESIGN-HEAT-T=70  DESIGN-COOL-T=78
° 357 °                          ZONE-TYPE=CONDITIONED
° 358 °                          ASSIGNED-CFM=350
° 359 °                          HEAT-TEMP-SCH=HEAT-1
° 360 °                          COOL-TEMP-SCH=COOL-1 ..
° 361 °
° 362 °                       $ -----Sleeping zone------ $
° 363 °
° 364 ° ZONE-2    =ZONE          LIKE ZONE-1  HEAT-TEMP-SCH=HEAT-2
° 365 °                          BASEBOARD-CTRL=THERMOSTATIC
° 366 °                          BASEBOARD-RATING=-5000
° 367 °                          ASSIGNED-CFM=350 ..
° 368 °
° 369 °           $ -----AIR CONDITIONER AND GAS FURNACE PARAMETERS----- $
° 370 °
° 371 ° SYS-1     =SYSTEM        SYSTEM-TYPE=RESYS          ZONE-NAMES=(ZONE-1,ZONE-2)
° 372 °                          HEAT-SOURCE=FURNACE     SUPPLY-CFM=700
° 373 °                          COOLING-CAPACITY=24000      HEATING-CAPACITY=-50000
° 374 °                          COOL-SH-CAP=16000
° 375 °                          MAX-SUPPLY-T=140            MIN-SUPPLY-T=57
° 376 °                          COOLING-EIR=.343            FURNACE-AUX=100  ..
° 377 °
° 378 ° PLANT1 = PLANT-ASSIGNMENT  SYSTEM-NAMES = (SYS-1)
° 379 °                            DHW-TYPE=ELECTRIC
° 380 °                            DHW-GAL/MIN  = .375
° 381 °                            DHW-SCH      = DHWSCH-1 ..
° 382 °
° 383 ° DHWSCH-1  =SCHEDULE        THRU DEC 31 (ALL)
° 384 °                            (1,7)(0)(8,9)(1.0)(10,12)(0)(13,14)(.05)
° 385 °                            (15,17)(0)(18,21)(.67)(22,24)(0) ..
° 386 ° END ..
° 387 ° COMPUTE SYSTEMS ..
° 388 °
```

```
° 390 ° PLANT1 = PLANT-ASSIGNMENT  ..
° 391 °
° 392 °          PLANT-REPORT        SUMMARY=(BEPS,PS-B) ..
° 393 °
° 394 ° END ..
° 395 ° COMPUTE PLANT ..
° 396 °
° 397 ° INPUT ECONOMICS  ..
```

E D L P R O C E S S O R I N P U T D A T A

Thu Nov 4 15:07:28 1993EDL RUN 3

```
° 398 ° ECONOMICS-REPORT  SUMMARY=(ES-D)  ..
° 399 °
° 400 ° ELEC-COST  = UTILITY-RATE  RESOURCE = ELECTRICITY
° 401 °              BLOCK-CHARGES = (ELCOST)  ..
° 402 °
° 403 ° ELCOST     = BLOCK-CHARGE  BLOCK1-TYPE = ENERGY
° 404 °              BLOCK1-DATA = (800,.065,400,.080,1,.10)  ..
° 405 °
° 406 ° GAS-COST   = UTILITY-RATE  RESOURCE = NATURAL-GAS
° 407 °                            ENERGY-CHG = .55  ..
° 408 ° END  ..
° 409 ° COMPUTE ECONOMICS  ..
° 410 ° STOP  ..
```

SYSTEM NAME	SYSTEM TYPE	ALTITUDE MULTIPLIER	FLOOR AREA (SQFT)	MAX PEOPLE
SYS-1	RESYS	1.000	1176.0	0.

SUPPLY FAN (CFM)	ELEC (KW)	DELTA-T (F)	RETURN FAN (CFM)	ELEC (KW)	DELTA-T (F)	OUTSIDE AIR RATIO	COOLING CAPACITY (KBTU/HR)	SENSIBLE (SHR)	HEATING CAPACITY (KBTU/HR)	COOLING EIR (BTU/BTU)	HEATING EIR (BTU/BTU)
700.	0.090	0.4	0.	0.000	0.0	0.000	24.000	0.667	-50.000	0.34	0.37

ZONE NAME	SUPPLY FLOW (CFM)	EXHAUST FLOW (CFM)	FAN (KW)	MINIMUM FLOW RATIO	OUTSIDE AIR FLOW (CFM)	COOLING CAPACITY (KBTU/HR)	SENSIBLE (SHR)	EXTRACTION RATE (KBTU/HR)	HEATING CAPACITY (KBTU/HR)	ADDITION RATE (KBTU/HR)	MULTIPLIER
ZONE-1	350.	0.	0.000	1.000	0.	0.00	0.00	7.82	0.00	-25.12	1.0
ZONE-2	350.	0.	0.000	1.000	0.	0.00	0.00	7.82	0.00	-30.12	1.0

TANK SIZE is 30.0 (GAL) HEATER CAP = 25.774 (KBTU/HR) FLOW RATE = 0.375 (GAL/MIN) PUMP = 0.000 (KW)

MONTH		UNIT LOAD (MBTU) (KBTU/HR)	ENERGY USE (KWH) (KW)	RCV EN USE (KWH) (KW)	PUMP ENERGY (KWH) (KW)	00 10	10 20	20 30	30 40	40 50	50 60	60 70	70 80	80 90	90 100	100 +	TOTAL RUN HOURS
		Number of hours within each PART LOAD range															
JAN	SUM	2.781	978.461	0.000	0.000	558	0	0	0	0	124	0	62	0	0	0	744
	PEAK	18.767	5.719	0.000	0.000												
	DAY/HR	31/ 9	31/ 9	31/24	31/24												
FEB	SUM	2.587	910.286	0.000	0.000	504	0	0	0	0	112	0	56	0	0	0	672
	PEAK	19.330	5.890	0.000	0.000												
	DAY/HR	28/ 9	28/ 9	28/24	28/24												
MAR	SUM	2.809	988.242	0.000	0.000	558	0	0	0	0	124	0	62	0	0	0	744
	PEAK	18.955	5.776	0.000	0.000												
	DAY/HR	31/ 9	31/ 9	31/24	31/24												
APR	SUM	2.584	909.023	0.000	0.000	540	0	0	0	120	0	0	60	0	0	0	720
	PEAK	18.017	5.490	0.000	0.000												
	DAY/HR	30/ 9	30/ 9	30/ 1	30/ 1												
MAY	SUM	2.475	870.824	0.000	0.000	558	0	0	0	124	0	62	0	0	0	0	744
	PEAK	16.703	5.090	0.000	0.000												
	DAY/HR	31/ 9	31/ 9	31/ 1	31/ 1												
JUN	SUM	2.207	776.454	0.000	0.000	540	0	0	0	120	0	60	0	0	0	0	720
	PEAK	15.389	4.689	0.000	0.000												
	DAY/HR	30/ 9	30/ 9	30/ 1	30/ 1												
JUL	SUM	2.114	743.631	0.000	0.000	558	0	0	124	0	62	0	0	0	0	0	744
	PEAK	14.263	4.346	0.000	0.000												
	DAY/HR	31/ 9	31/ 9	31/ 1	31/ 1												
AUG	SUM	2.058	724.058	0.000	0.000	558	0	0	124	0	62	0	0	0	0	0	744
	PEAK	13.888	4.232	0.000	0.000												
	DAY/HR	31/ 9	31/ 9	31/ 1	31/ 1												
SEP	SUM	2.045	719.643	0.000	0.000	540	0	0	120	0	60	0	0	0	0	0	720
	PEAK	14.263	4.346	0.000	0.000												
	DAY/HR	30/ 9	30/ 9	30/ 1	30/ 1												
OCT	SUM	2.253	792.550	0.000	0.000	558	0	0	0	124	0	62	0	0	0	0	744
	PEAK	15.201	4.632	0.000	0.000												
	DAY/HR	31/ 9	31/ 9	31/24	31/24												
NOV	SUM	2.368	833.267	0.000	0.000	540	0	0	0	120	0	60	0	0	0	0	720
	PEAK	16.515	5.033	0.000	0.000												
	DAY/HR	30/ 9	30/ 9	30/24	30/24												
DEC	SUM	2.642	929.540	0.000	0.000	558	0	0	0	124	0	0	62	0	0	0	744
	PEAK	17.829	5.433	0.000	0.000												
	DAY/HR	31/ 9	31/ 9	31/24	31/24												
YR	SUM	28.922	10175.467	0.000	0.000	6570	0	0	368	732	544	244	302	0	0	0	8760
	PEAK	19.330	5.890	0.000	0.000												
	MON/DAY	2/28	2/28	12/31	12/31												

	COOLING						HEATING						ELEC	
MONTH	COOLING ENERGY (MBTU)	TIME OF MAX DY	TIME OF MAX HR	DRY-BULB TEMP	WET-BULB TEMP	MAXIMUM COOLING LOAD (KBTU/HR)	HEATING ENERGY (MBTU)	TIME OF MAX DY	TIME OF MAX HR	DRY-BULB TEMP	WET-BULB TEMP	MAXIMUM HEATING LOAD (KBTU/HR)	ELECTRICAL ENERGY (KWH)	MAXIMUM ELEC LOAD (KW)
JAN	0.00000					0.000	-8.508	12	8	-7.F	-7.F	-34.310	577.	1.595
FEB	0.00000					0.000	-7.208	4	8	7.F	6.F	-28.366	516.	1.543
MAR	0.00000					0.000	-4.982	24	8	6.F	5.F	-28.403	553.	1.544
APR	0.11741	28	15	78.F	68.F	5.487	-1.745	8	8	30.F	27.F	-18.675	523.	1.670
MAY	0.31255	21	14	85.F	75.F	10.998	-0.599	6	8	37.F	33.F	-13.952	543.	1.773
JUN	1.49266	20	18	91.F	78.F	13.441	-0.024	1	8	50.F	49.F	-3.564	670.	2.508
JUL	3.61637	13	17	97.F	78.F	15.402	0.000					0.000	937.	2.752
AUG	2.67579	26	17	94.F	76.F	12.303	0.000					0.000	828.	2.329
SEP	0.75123	11	15	87.F	72.F	10.882	-0.269	22	8	34.F	31.F	-13.994	580.	1.895
OCT	0.05082	5	16	74.F	62.F	2.916	-1.251	21	8	30.F	29.F	-16.991	520.	1.506
NOV	0.03497	2	13	74.F	61.F	4.121	-4.144	26	8	25.F	22.F	-20.043	533.	1.502
DEC	0.00000					0.000	-6.976	9	8	13.F	12.F	-24.634	567.	1.534
TOTAL	9.052						-35.706						7348.	
MAX						15.402						-34.310		2.752

SINGLE FAMILY RESIDENCE CONVENTIONAL DESIGN DOE-2.1E-001 Thu Nov 4 15:07:28 1993SDL RUN 3
CUSTOM WEIGHTING FACTORS 2 zones - living & sleeping RUN 3: RESYS with central AC and gas fur
REPORT- SS-H SYSTEM MONTHLY LOADS SUMMARY FOR SYS-1 WEATHER FILE- TRY CHICAGO

	--FAN ELEC---		--FUEL HEAT--		--FUEL COOL--		-ELEC HEAT--		-ELEC COOL--	
MONTH	FAN ENERGY (KWH)	MAXIMUM FAN LOAD (KW)	GAS OIL ENERGY (MBTU)	MAXIMUM GAS OIL LOAD (KBTU/HR)	GAS OIL ENERGY (MBTU)	MAXIMUM GAS OIL LOAD (KBTU/HR)	ELECTRIC ENERGY (KWH)	MAXIMUM ELECTRIC LOAD (KW)	ELECTRIC ENERGY (KWH)	MAXIMUM ELECTRIC LOAD (KW)
JAN	15.	0.061	12.924	48.384	0.000	0.000	47.	0.412	37.	0.050
FEB	13.	0.051	11.039	40.750	0.000	0.000	39.	0.382	33.	0.050
MAR	9.	0.051	7.899	40.799	0.000	0.000	34.	0.383	33.	0.050
APR	4.	0.033	2.944	27.843	0.000	0.000	19.	0.350	39.	0.678
MAY	3.	0.049	1.132	21.345	0.000	0.000	6.	0.260	56.	1.165
JUN	8.	0.058	0.123	6.575	0.000	0.000	0.	0.000	200.	1.442
JUL	18.	0.072	0.074	0.100	0.000	0.000	0.	0.000	441.	1.743
AUG	13.	0.057	0.074	0.100	0.000	0.000	0.	0.000	337.	1.393
SEP	4.	0.053	0.546	21.403	0.000	0.000	1.	0.186	112.	1.182
OCT	2.	0.030	2.210	25.542	0.000	0.000	10.	0.194	30.	0.468
NOV	7.	0.036	6.656	29.699	0.000	0.000	27.	0.340	36.	0.556
DEC	12.	0.044	10.813	35.848	0.000	0.000	40.	0.373	37.	0.050
TOTAL	107.		56.437		0.000		223.		1393.	
MAX		0.072		48.384		0.000		0.412		1.743

SINGLE FAMILY RESIDENCE — CONVENTIONAL DESIGN — DOE-2.1E-001 Thu Nov 4 15:07:28 1993SDL RUN 3
CUSTOM WEIGHTING FACTORS — 2 zones - living & sleeping — RUN 3: RESYS with central AC and gas fur
REPORT- SS-P LOAD, ENERGY AND PART LOAD HEATING IN SYS-1 — WEATHER FILE- TRY CHICAGO

UNIT TYPE is RESYS HEATING-CAPACITY = -50.000 (KBTU/HR) HEATING-EIR = 0.370 (BTU/BTU) SUPPLY-FLOW = 700. (CFM)

MONTH		UNIT LOAD (MBTU) (KBTU/HR)	ENERGY USE (KWH) (KW)	COMPRESSOR (KWH) (KW)	FAN ENERGY (KWH) (KW)		Number of hours within each PART LOAD range 00-10	10-20	20-30	30-40	40-50	50-60	60-70	70-80	80-90	90-100	100+	TOTAL RUN HOURS
JAN	SUM	-8.508	47.232	0.000	14.957	CMP	0	0	0	0	0	0	0	0	0	0	0	0
	PEAK	-34.310	0.412	0.000	0.061	FAN	57	237	204	169	40	6	3	0	0	0	0	716
	DAY/HR	12/ 8	0/ 0	0/ 0	0/ 0													
FEB	SUM	-7.208	38.912	0.000	12.679	CMP	0	0	0	0	0	0	0	0	0	0	0	0
	PEAK	-28.366	0.382	0.000	0.051	FAN	72	213	236	109	16	3	0	0	0	0	0	649
	DAY/HR	4/ 8	0/ 0	0/ 0	0/ 0													
MAR	SUM	-4.982	33.644	0.000	8.723	CMP	0	0	0	0	0	0	0	0	0	0	0	0
	PEAK	-28.403	0.383	0.000	0.051	FAN	141	368	70	45	4	2	0	0	0	0	0	630
	DAY/HR	24/ 8	0/ 0	0/ 0	0/ 0													
APR	SUM	-1.745	18.924	0.000	3.620	CMP	0	0	0	0	0	0	0	0	0	0	0	0
	PEAK	-18.675	0.350	0.000	0.033	FAN	186	134	19	3	0	0	0	0	0	0	0	342
	DAY/HR	8/ 8	0/ 0	0/ 0	0/ 0													
MAY	SUM	-0.599	6.205	0.000	2.538	CMP	0	0	0	0	0	0	0	0	0	0	0	0
	PEAK	-13.952	0.260	0.000	0.049	FAN	136	27	8	0	0	0	0	0	0	0	0	171
	DAY/HR	6/ 8	0/ 0	0/ 0	0/ 0													
JUN	SUM	-0.024	0.000	0.000	7.552	CMP	0	0	0	0	0	0	0	0	0	0	0	0
	PEAK	-3.564	0.000	0.000	0.058	FAN	13	0	0	0	0	0	0	0	0	0	0	13
	DAY/HR	1/ 8	0/ 0	0/ 0	0/ 0													
JUL	SUM	0.000	0.000	0.000	17.734	CMP	0	0	0	0	0	0	0	0	0	0	0	0
	PEAK	0.000	0.000	0.000	0.072	FAN	0	0	0	0	0	0	0	0	0	0	0	0
	DAY/HR	31/ 1	0/ 0	0/ 0	0/ 0													
AUG	SUM	0.000	0.000	0.000	13.182	CMP	0	0	0	0	0	0	0	0	0	0	0	0
	PEAK	0.000	0.000	0.000	0.057	FAN	0	0	0	0	0	0	0	0	0	0	0	0
	DAY/HR	31/ 1	0/ 0	0/ 0	0/ 0													
SEP	SUM	-0.269	1.284	0.000	4.351	CMP	0	0	0	0	0	0	0	0	0	0	0	0
	PEAK	-13.994	0.186	0.000	0.053	FAN	54	15	2	0	0	0	0	0	0	0	0	71
	DAY/HR	22/ 8	0/ 0	0/ 0	0/ 0													
OCT	SUM	-1.251	10.115	0.000	2.442	CMP	0	0	0	0	0	0	0	0	0	0	0	0
	PEAK	-16.991	0.194	0.000	0.030	FAN	207	66	15	3	0	0	0	0	0	0	0	291
	DAY/HR	21/ 8	0/ 0	0/ 0	0/ 0													
NOV	SUM	-4.144	26.828	0.000	7.457	CMP	0	0	0	0	0	0	0	0	0	0	0	0
	PEAK	-20.043	0.340	0.000	0.036	FAN	170	288	96	15	1	0	0	0	0	0	0	570
	DAY/HR	26/ 8	0/ 0	0/ 0	0/ 0													
DEC	SUM	-6.976	40.045	0.000	12.255	CMP	0	0	0	0	0	0	0	0	0	0	0	0
	PEAK	-24.634	0.373	0.000	0.044	FAN	62	322	256	58	6	0	0	0	0	0	0	704
	DAY/HR	9/ 8	0/ 0	0/ 0	0/ 0													
YR	SUM	-35.706	223.187	0.000	107.491	CMP	0	0	0	0	0	0	0	0	0	0	0	0
	PEAK	-34.310	0.412	0.000	0.072	FAN	1098	1670	906	402	67	11	3	0	0	0	0	4157
	MON/DAY	0/ 0	0/ 0	0/ 0	0/ 0													

SINGLE FAMILY RESIDENCE CONVENTIONAL DESIGN DOE-2.1E-001 Thu Nov 4 15:07:28 1993SDL RUN 3
CUSTOM WEIGHTING FACTORS 2 zones - living & sleeping RUN 3: RESYS with central AC and gas fur
REPORT- SS-P LOAD, ENERGY AND PART LOAD COOLING IN SYS-1 WEATHER FILE- TRY CHICAGO

UNIT TYPE is RESYS COOLING-CAPACITY = 24.000 (KBTU/HR) COOLING-EIR = 0.343 (BTU/BTU) SUPPLY-FLOW = 700. (CFM)

MONTH		UNIT LOAD (MBTU) (KBTU/HR)	ENERGY USE (KWH) (KW)	COMPRESSOR (KWH) (KW)	FAN ENERGY (KWH) (KW)		00 10	10 20	20 30	30 40	40 50	50 60	60 70	70 80	80 90	90 100	100 +	TOTAL RUN HOURS
JAN	SUM	0.000	37.000	0.000	14.957	CMP	0	0	0	0	0	0	0	0	0	0	0	0
	PEAK	0.000	0.050	0.000	0.061	FAN	0	0	0	0	0	0	0	0	0	0	0	0
	DAY/HR	31/24	0/ 0	0/ 0	0/ 0													
FEB	SUM	0.000	33.400	0.000	12.679	CMP	0	0	0	0	0	0	0	0	0	0	0	0
	PEAK	0.000	0.050	0.000	0.051	FAN	0	0	0	0	0	0	0	0	0	0	0	0
	DAY/HR	28/24	0/ 0	0/ 0	0/ 0													
MAR	SUM	0.000	33.200	0.000	8.723	CMP	0	0	0	0	0	0	0	0	0	0	0	0
	PEAK	0.000	0.050	0.000	0.051	FAN	0	0	0	0	0	0	0	0	0	0	0	0
	DAY/HR	31/24	0/ 0	0/ 0	0/ 0													
APR	SUM	0.117	38.539	21.439	3.620	CMP	27	21	2	0	0	0	0	0	0	0	0	50
	PEAK	5.487	0.678	0.678	0.033	FAN	18	22	10	0	0	0	0	0	0	0	0	50
	DAY/HR	28/15	0/ 0	28/15	0/ 0													
MAY	SUM	0.313	56.440	47.690	2.538	CMP	43	32	18	3	2	0	0	0	0	0	0	98
	PEAK	10.998	1.165	1.165	0.049	FAN	32	32	18	11	3	2	0	0	0	0	0	98
	DAY/HR	21/14	0/ 0	21/14	0/ 0													
JUN	SUM	1.493	200.257	199.957	7.552	CMP	87	112	96	38	4	5	0	0	0	0	0	342
	PEAK	13.441	1.442	1.442	0.058	FAN	63	68	98	67	36	5	5	0	0	0	0	342
	DAY/HR	20/18	0/ 0	20/18	0/ 0													
JUL	SUM	3.616	441.365	441.365	17.734	CMP	104	118	141	133	62	25	7	0	0	0	0	590
	PEAK	15.402	1.743	1.743	0.072	FAN	76	87	88	113	105	76	33	11	1	0	0	590
	DAY/HR	13/17	0/ 0	13/18	0/ 0													
AUG	SUM	2.676	336.878	336.878	13.182	CMP	104	130	145	87	43	3	0	0	0	0	0	512
	PEAK	12.303	1.393	1.393	0.057	FAN	80	88	100	102	83	51	8	0	0	0	0	512
	DAY/HR	26/17	0/ 0	26/17	0/ 0													
SEP	SUM	0.751	111.845	107.195	4.351	CMP	69	68	37	18	6	0	0	0	0	0	0	198
	PEAK	10.882	1.182	1.182	0.053	FAN	54	44	47	27	19	7	0	0	0	0	0	198
	DAY/HR	11/15	0/ 0	11/15	0/ 0													
OCT	SUM	0.051	29.901	14.751	2.442	CMP	42	2	0	0	0	0	0	0	0	0	0	44
	PEAK	2.916	0.468	0.468	0.030	FAN	36	8	0	0	0	0	0	0	0	0	0	44
	DAY/HR	5/16	0/ 0	5/16	0/ 0													
NOV	SUM	0.035	36.396	6.046	7.457	CMP	6	8	0	0	0	0	0	0	0	0	0	14
	PEAK	4.121	0.556	0.556	0.036	FAN	4	5	5	0	0	0	0	0	0	0	0	14
	DAY/HR	2/13	0/ 0	2/13	0/ 0													
DEC	SUM	0.000	37.200	0.000	12.255	CMP	0	0	0	0	0	0	0	0	0	0	0	0
	PEAK	0.000	0.050	0.000	0.044	FAN	0	0	0	0	0	0	0	0	0	0	0	0
	DAY/HR	31/24	0/ 0	0/ 0	0/ 0													
YR	SUM	9.052	1392.511	1175.322	107.491	CMP	482	491	439	279	117	33	7	0	0	0	0	1848
	PEAK	15.402	1.743	1.743	0.072	FAN	363	354	366	320	246	141	46	11	1	0	0	1848
	MON/DAY	0/ 0	0/ 0	7/13	0/ 0													

	UNIT RUN TIME (HOURS)	TOTAL LOAD ON UNIT (MBTU)	ENERGY IN TO UNIT (MBTU)	AUXILIARY ENERGY (MBTU)	SUP UNIT LOAD (MBTU)	SUP UNIT ENERGY (MBTU)	WASTE HEAT GENERATED (MBTU)	WASTE HEAT USE (MBTU)		INDOOR FAN ENERGY (MBTU)
JAN	0.	0.000	0.000	0.126	0.000	0.000	0.000	0.000	0.000	0.000
FEB	0.	0.000	0.000	0.114	0.000	0.000	0.000	0.000	0.000	0.000
MAR	0.	0.000	0.000	0.113	0.000	0.000	0.000	0.000	0.000	0.000
APR	5.	0.117	0.073	0.058	0.000	0.000	0.000	0.000	0.000	0.002
MAY	13.	0.313	0.163	0.030	0.000	0.000	0.000	0.000	0.000	0.005
JUN	62.	1.493	0.682	0.001	0.000	0.000	0.000	0.000	0.000	0.026
JUL	151.	3.616	1.506	0.000	0.000	0.000	0.000	0.000	0.000	0.061
AUG	111.	2.676	1.150	0.000	0.000	0.000	0.000	0.000	0.000	0.045
SEP	31.	0.751	0.366	0.016	0.000	0.000	0.000	0.000	0.000	0.013
OCT	2.	0.051	0.050	0.052	0.000	0.000	0.000	0.000	0.000	0.001
NOV	1.	0.035	0.021	0.104	0.000	0.000	0.000	0.000	0.000	0.001
DEC	0.	0.000	0.000	0.127	0.000	0.000	0.000	0.000	0.000	0.000
ANNUAL	377.	9.052	4.011	0.741	0.000	0.000	0.000	0.000	0.000	0.153

CSPF (WITH PARASITICS) = 1.85 (BTU/BTU)

CSPF (WITHOUT PARASITICS) = 2.26 (BTU/BTU)

	UNIT RUN TIME (HOURS)	TOTAL LOAD ON UNIT (MBTU)	ENERGY IN TO UNIT (MBTU)	AUXILIARY ENERGY (MBTU)	SUP UNIT LOAD (MBTU)	SUP UNIT ENERGY (MBTU)	WASTE HEAT GENERATED (MBTU)	WASTE HEAT USE (MBTU)	DEFROST LOAD (MBTU)	INDOOR FAN ENERGY (MBTU)
JAN	167.	-8.346	12.866	0.058	-0.161	0.000	0.000	0.000	0.000	0.051
FEB	142.	-7.075	10.986	0.053	-0.133	0.000	0.000	0.000	0.000	0.043
MAR	97.	-4.868	7.835	0.065	-0.115	0.000	0.000	0.000	0.000	0.030
APR	34.	-1.680	2.876	0.069	-0.065	0.000	0.000	0.000	0.000	0.010
MAY	12.	-0.578	1.059	0.073	-0.021	0.000	0.000	0.000	0.000	0.004
JUN	0.	-0.024	0.051	0.072	0.000	0.000	0.000	0.000	0.000	0.000
JUL	0.	0.000	0.000	0.074	0.000	0.000	0.000	0.000	0.000	0.000
AUG	0.	0.000	0.000	0.074	0.000	0.000	0.000	0.000	0.000	0.000
SEP	5.	-0.264	0.475	0.071	-0.004	0.000	0.000	0.000	0.000	0.002
OCT	24.	-1.216	2.138	0.072	-0.035	0.000	0.000	0.000	0.000	0.007
NOV	81.	-4.053	6.592	0.064	-0.092	0.000	0.000	0.000	0.000	0.025
DEC	137.	-6.839	10.753	0.061	-0.137	0.000	0.000	0.000	0.000	0.042
ANNUAL	699.	-34.944	55.631	0.806	-0.762	0.000	0.000	0.000	0.000	0.214

HSPF (WITH PARASITICS) = 0.63 (BTU/BTU)

HSPF (WITHOUT PARASITICS) = 0.64 (BTU/BTU)

	----DEMANDS-----		--BASEBOARDS---		--TEMPERATURES--		--LOADS NOT MET--	
MONTH	HEAT EXTRACTION ENERGY (MBTU)	HEAT ADDITION ENERGY (MBTU)	BASEBOARD ENERGY (MBTU)	MAXIMUM BASEBOARD LOAD (KBTU/HR)	MAXIMUM ZONE TEMP (F)	MINIMUM ZONE TEMP (F)	HOURS UNDER HEATED	HOURS UNDER COOLED
JAN	0.00000	-4.173	0.00000	0.000	70.2	60.0	0	0
FEB	0.00000	-3.536	0.00000	0.000	70.3	60.1	0	0
MAR	0.00000	-2.430	0.00000	0.000	77.7	60.1	0	0
APR	0.05157	-0.837	0.00000	0.000	77.9	60.2	0	0
MAY	0.12684	-0.288	0.00000	0.000	78.0	60.2	0	0
JUN	0.63479	-0.012	0.00000	0.000	78.1	64.1	0	0
JUL	1.50851	0.000	0.00000	0.000	78.2	71.7	0	0
AUG	1.12160	0.000	0.00000	0.000	78.1	68.9	0	0
SEP	0.32900	-0.132	0.00000	0.000	78.0	60.2	0	0
OCT	0.02248	-0.604	0.00000	0.000	77.8	60.2	0	0
NOV	0.01657	-2.023	0.00000	0.000	77.9	60.2	0	0
DEC	0.00000	-3.418	0.00000	0.000	70.2	60.1	0	0

TOTAL HOURS AT TEMPERATURE LEVEL AND TIME OF DAY

HOUR	1AM	2	3	4	5	6	7	8	9	10	11	12	1PM	2	3	4	5	6	7	8	9	10	11	12	TOTAL
ABOVE 85	0	0	0	0	0	0	0	0	0	0	0	0	0	0	0	0	0	0	0	0	0	0	0	0	0
80-85	0	0	0	0	0	0	0	0	0	0	0	0	0	0	0	0	0	0	0	0	0	0	0	0	0
75-80	77	65	49	42	42	48	73	77	87	97	119	133	149	153	160	159	159	149	149	146	140	133	128	100	2634
70-75	59	61	66	61	56	52	112	276	276	268	246	232	216	212	205	206	206	216	216	219	225	201	36	49	3972
65-70	37	37	42	41	44	47	8	12	2	0	0	0	0	0	0	0	0	0	0	0	0	29	59	46	404
60-65	192	202	208	221	223	218	172	0	0	0	0	0	0	0	0	0	0	0	0	0	0	2	142	170	1750
BELOW 60	0	0	0	0	0	0	0	0	0	0	0	0	0	0	0	0	0	0	0	0	0	0	0	0	0

	----DEMANDS----		--BASEBOARDS--		--TEMPERATURES--		--LOADS NOT MET--	
MONTH	HEAT EXTRACTION ENERGY (MBTU)	HEAT ADDITION ENERGY (MBTU)	BASEBOARD ENERGY (MBTU)	MAXIMUM BASEBOARD LOAD (KBTU/HR)	MAXIMUM ZONE TEMP (F)	MINIMUM ZONE TEMP (F)	HOURS UNDER HEATED	HOURS UNDER COOLED
JAN	0.00000	-4.258	-0.16120	-1.406	69.7	60.1	0	0
FEB	0.00000	-3.608	-0.13281	-1.302	69.9	60.1	0	0
MAR	0.00000	-2.488	-0.11482	-1.306	74.3	60.1	0	0
APR	0.04349	-0.859	-0.06459	-1.193	75.9	60.1	0	0
MAY	0.10747	-0.297	-0.02118	-0.888	75.5	60.2	0	0
JUN	0.54881	-0.012	0.00000	0.000	76.2	63.1	0	0
JUL	1.33571	0.000	0.00000	0.000	76.8	70.0	0	0
AUG	0.98452	0.000	0.00000	0.000	76.8	67.3	0	0
SEP	0.28614	-0.136	-0.00438	-0.635	76.7	60.2	0	0
OCT	0.01911	-0.620	-0.03452	-0.662	76.0	60.2	0	0
NOV	0.01396	-2.068	-0.09156	-1.161	75.8	60.1	0	0
DEC	0.00000	-3.489	-0.13667	-1.272	69.4	60.1	0	0

TOTAL HOURS AT TEMPERATURE LEVEL AND TIME OF DAY

HOUR	1AM	2	3	4	5	6	7	8	9	10	11	12	1PM	2	3	4	5	6	7	8	9	10	11	12	TOTAL
ABOVE 85	0	0	0	0	0	0	0	0	0	0	0	0	0	0	0	0	0	0	0	0	0	0	0	0	0
80-85	0	0	0	0	0	0	0	0	0	0	0	0	0	0	0	0	0	0	0	0	0	0	0	0	0
75-80	44	36	30	26	26	26	0	5	8	7	0	17	37	68	95	115	120	119	107	90	78	58	40	54	1206
70-75	78	71	68	64	61	55	86	86	88	100	129	124	123	102	79	62	53	51	60	70	75	88	103	78	1954
65-70	40	48	46	47	46	51	105	274	269	258	236	224	205	195	191	188	192	195	198	205	212	206	44	39	3714
60-65	203	210	221	228	232	233	174	0	0	0	0	0	0	0	0	0	0	0	0	0	0	13	178	194	1886
BELOW 60	0	0	0	0	0	0	0	0	0	0	0	0	0	0	0	0	0	0	0	0	0	0	0	0	0

SINGLE FAMILY RESIDENCE — CONVENTIONAL DESIGN — DOE-2.1E-001 Thu Nov 4 15:07:28 1993PDL RUN 3
CUSTOM WEIGHTING FACTORS — 2 zones - living & sleeping — RUN 3: RESYS with central AC and gas fur
REPORT- PS-B MONTHLY UTILITY AND FUEL USE SUMMARY — WEATHER FILE- TRY CHICAGO

MONTH	BTU/UNIT:	ELECTRICITY METER-1 3413./KWH	NATURAL-GAS METER-1 100000./THERM
JAN			
ENERGY CONSUMPTION (UNITS/MO)		1555.3	129.2
PEAK DEMAND (UNITS/HR OR DAY)		7.2	0.5
	PEAK DAY/HR	12/ 8	12/ 8
FEB			
ENERGY CONSUMPTION (UNITS/MO)		1426.7	110.4
PEAK DEMAND (UNITS/HR OR DAY)		7.3	0.4
	PEAK DAY/HR	4/ 8	4/ 8
MAR			
ENERGY CONSUMPTION (UNITS/MO)		1541.5	79.0
PEAK DEMAND (UNITS/HR OR DAY)		7.2	0.4
	PEAK DAY/HR	24/ 8	24/ 8
APR			
ENERGY CONSUMPTION (UNITS/MO)		1432.4	29.4
PEAK DEMAND (UNITS/HR OR DAY)		6.9	0.3
	PEAK DAY/HR	8/ 8	8/ 8
MAY			
ENERGY CONSUMPTION (UNITS/MO)		1413.7	11.3
PEAK DEMAND (UNITS/HR OR DAY)		6.5	0.2
	PEAK DAY/HR	6/ 8	6/ 8
JUN			
ENERGY CONSUMPTION (UNITS/MO)		1446.6	1.2
PEAK DEMAND (UNITS/HR OR DAY)		6.7	0.1
	PEAK DAY/HR	30/ 8	1/ 8
JUL			
ENERGY CONSUMPTION (UNITS/MO)		1680.4	0.7
PEAK DEMAND (UNITS/HR OR DAY)		6.5	0.0
	PEAK DAY/HR	3/ 8	1/ 2
AUG			
ENERGY CONSUMPTION (UNITS/MO)		1551.8	0.7
PEAK DEMAND (UNITS/HR OR DAY)		6.1	0.0
	PEAK DAY/HR	16/ 8	1/ 2
SEP			
ENERGY CONSUMPTION (UNITS/MO)		1299.4	5.5
PEAK DEMAND (UNITS/HR OR DAY)		6.1	0.2
	PEAK DAY/HR	11/ 8	22/ 8
OCT			
ENERGY CONSUMPTION (UNITS/MO)		1312.7	22.1
PEAK DEMAND (UNITS/HR OR DAY)		6.0	0.3
	PEAK DAY/HR	21/ 8	21/ 8
NOV			
ENERGY CONSUMPTION (UNITS/MO)		1366.2	66.6
PEAK DEMAND (UNITS/HR OR DAY)		6.4	0.3
	PEAK DAY/HR	26/ 8	26/ 8
DEC			
ENERGY CONSUMPTION (UNITS/MO)		1496.7	108.1
PEAK DEMAND (UNITS/HR OR DAY)		6.8	0.4
	PEAK DAY/HR	9/ 8	9/ 8
TOTAL			
ENERGY CONSUMPTION (UNITS/YR)		17523.6	564.4
PEAK DEMAND (UNITS/HR OR DAY)		7.3	0.5

ELECTRICAL LOADS	KWH SUPPLIED	PCT OF TOTAL LOAD
ELECTRICITY	17523.6	100.0
LOAD SATISFIED	17523.6	100.0
TOTAL LOAD ON PLANT	17523.5	

(CONTINUED)

SUMMARY OF LOADS MET

TYPE OF LOAD	TOTAL LOAD (MBTU)	LOAD SATISFIED (MBTU)	TOTAL OVERLOAD (MBTU)	PEAK OVERLOAD (MBTU)	HOURS OVERLOADED
ELECTRICAL LOADS	59.8	59.8	0.000	0.000	0

ENERGY TYPE:	ELECTRICITY	NATURAL-GAS
UNITS: MBTU		
CATEGORY OF USE		
SOURCE USES	19.2	0.0
SPACE HEAT	0.8	56.4
SPACE COOL	4.0	0.0
PUMPS & MISC	0.7	0.0
VENT FANS	0.4	0.0
DOMHOT WATER	34.7	0.0
TOTAL	59.8	56.4

TOTAL SITE ENERGY	116.24 MBTU	98.8 KBTU/SQFT-YR GROSS-AREA	98.8 KBTU/SQFT-YR NET-AREA
TOTAL SOURCE ENERGY	235.87 MBTU	200.6 KBTU/SQFT-YR GROSS-AREA	200.6 KBTU/SQFT-YR NET-AREA

PERCENT OF HOURS ANY SYSTEM ZONE OUTSIDE OF THROTTLING RANGE = 0.0
PERCENT OF HOURS ANY PLANT LOAD NOT SATISFIED = 0.0

NOTE: ENERGY IS APPORTIONED HOURLY TO ALL END-USE CATEGORIES.

SINGLE FAMILY RESIDENCE
CUSTOM WEIGHTING FACTORS
REPORT- ES-D ENERGY COST SUMMARY

CONVENTIONAL DESIGN
2 zones - living & sleeping

DOE-2.1E-001 Thu Nov 4 15:07:28 1993EDL RUN 3
RUN 3: RESYS with central AC and gas fur

UTILITY-RATE	RESOURCE	METERS	METERED ENERGY UNITS/YR	TOTAL CHARGE ($)	VIRTUAL RATE ($/UNIT)	RATE USED ALL YEAR?
ELEC-COST	ELECTRICITY	1 2 3 4 5	17524. KWH	1320.	0.0753	YES
GAS-COST	NATURAL-GAS	1 2 3 4 5	564. THERM	310.	0.5500	YES
				==========		
				1631.		

ENERGY COST/GROSS BLDG AREA: 1.39
ENERGY COST/NET BLDG AREA: 1.39

Daylighting Example

DrawBDL axonometric view of surfaces of the floor of an office building as input into BDL. For daylighting simulation, each 20-ft-wide office on the perimeter of all four exposures is input as a separate zone with a multiplier of 7. Only the exterior wall and associated window for each representative perimeter office are shown; the interior surfaces are not shown.

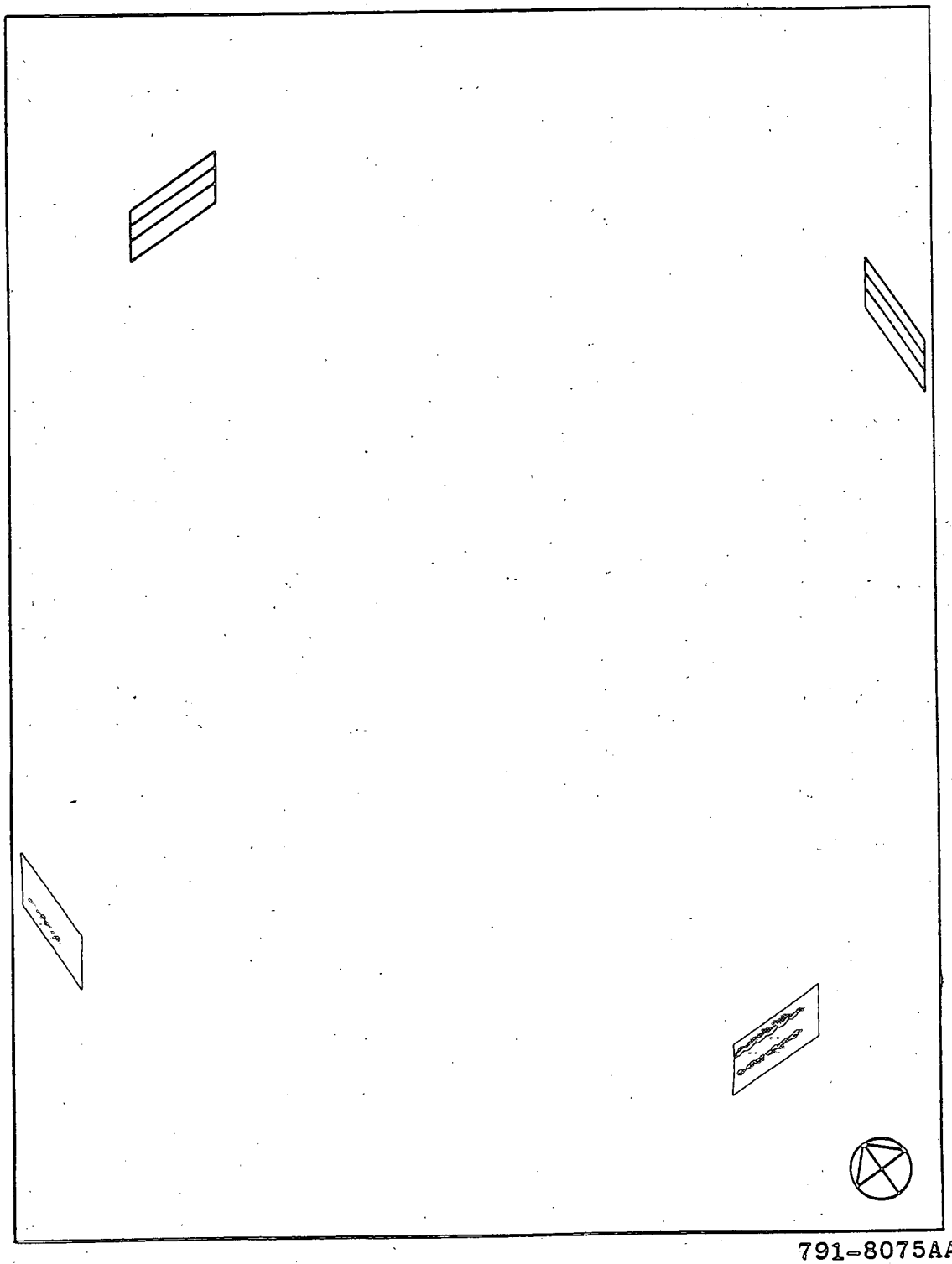

791-8075AA

L D L   P R O C E S S O R   I N P U T   D A T A

Fri Nov 5 21:58:52 1993LDL RUN 1

```
ABORT ERRORS    ..
DIAGNOSTIC CAUTIONS ..
TITLE LINE-1 = °DAYLIGHTING EXAMPLE°
      LINE-2 = °FLOOR OF OFFICE BUILDING IN CHICAGO°
      LINE-3 = °30-FT DEEP PERIM OFFS DAYLIT TO 15 FT°
      LINE-4 = °AUTO SHADE MANAGEMENT FOR SUN CONTROL° ..

$                               NORTHZONE (M=7)
$                          °°°°°°°°°°°°°°°°°°°°°°°°°°
$                          °        +    +          °
$                          °        +    +          °
$                          °        +    +          °
$                          °        +    +          °
$                   °°°°°°°°°°°°°°°°°°°°°°°°°°°°°°°°°°°°°°°°
$                   °      °                        °      °
$                   °      °                        °      °
$                   °      °                        °      °
$                   °      °                        °      °
$                   °++++++°                        °++++++°
$        WESTZONE   °      °    COREZONE            °      ° EASTZONE
$         (M=7)     °      °    140 X 140           °      ° (M=7)
$                   °++++++°    (NON-DAYLIT)        °++++++°
$                   °      °                        °      °
$                   °      °                        °      °
$                   °      °                        °      °
$                   °      °                        °      °
$                   °      °                        °      °
$                   °      °                        °      °
$                   °°°°°°°°°°°°°°°°°°°°°°°°°°°°°°°°°°°°°°°°
$                          °        +    +          °
$                          °        +    +          °
$                          °        +    +30        °
$                          °        + 20 +          °
$                          °°°°°°°°°°°°°°°°°°°°°°°°°°
$                               SOUTHZONE (M=7)
$
$                 PLAN -- FLOOR OF MULTISTORY OFFICE BUILDING
$
$
$                                    30
$                        °°°°°°°°°°°°°°°°°°°°°°°°°°°°°
$                        ° NON-DAYLIT . DAYLIT     ]
$                        °            .            ]
$                        °            .            ]  W
$                        °            . REF    10  ]  I
$                    20  °            . FT°++++++++++]  N
$                        °            .    +         ]  D
$                        °            . 10 +         ]  O
$                        °            .    +         ]  W
$                        °            .    +         ]
$                        °°°°°°°°°°°°°°°°°°°°°°°°°°°°°
$
$                          PLAN -- PERIMETER OFFICE

$
```

```
$
$                                   30
$                        °°°°°°°°°°°°°°°°°°°°°°°°°°°°°°
$                        ° NON-DAYLIT  .   DAYLIT     °
$                        °             .              ]
$                        °             .            3 ] WINDOW
$                     10 °             .  REF         ]
$                        °             .   PT   10    °
$                        °             .    °+++++++++° 4
$                        °             . 2.5+         °
$                        °°°°°°°°°°°°°°°°°°°°°°°°°°°°°°
$
$                     VERTICAL SECTION -- PERIMETER OFFICE


$ NOTES --  NORTH, SOUTH, EAST, AND WEST PERIMETER OFFICES ARE IDENTICAL
$              EXCEPT FOR ORIENTATION
$        --  PERIMETER OFFICES ARE DAYLIT TO 15 FT FROM WINDOW (I.E., ONLY
$              HALF OF THERMAL ZONE IS DAYLIT)
$        --  PEAK ELECTRIC LIGHTING DENSITY IS 2 W/FT2
$        --  DRAPES ARE AUTOMATICALLY CLOSED IF DIRECT TRANSMITTED SOLAR
$              GAIN EXCEEDS 20 BTU/H-SF
$        --  COREZONE IS NOT DAYLIT
$        --  ALL OF THE BOUNDING SURFACES OF THE PERIMETER OFFICES ARE
$              DESCRIBED.  FLOOR, CEILING, LEFT PARTITION, AND RIGHT
$              PARTITION ARE INTERIOR-WALLS WITH INT-WALL-TYPE=ADIABATIC.
$        --  DEFAULT VISIBLE REFLECTANCES OF INTERIOR SURFACES ARE USED
$        --  GLASS TRANSMITTANCE IS 0.68 (=0.80 TRANSMITTANCE FOR CLEAN
$              3/16-IN CLEAR DOUBLE GLAZING MINUS 15 PERCENT DUE TO
$              DIRT ON OUTSIDE SURFACE)
$        --  NORTH PERIMETER OFFICES HAVE NON-LINEAR DIMMING SYSTEM
$              DESCRIBED USING FUNCTIONAL INPUT
$
$        --  DOUBLE DOLLAR SIGN AT END OF LINES BELOW INDICATES
$              DAYLIGHTING-SPECIFIC INPUT


    PARAMETER

        CORE-AREA = 19600          $ CORE FLOOR AREA $
        PERIM-OFF-AREA = 600       $ PERIMETER OFFICE AREA $
        WWR = .3                   $ WINDOW/WALL RATIO $
        PERIM-OFF-WIDTH = 20       $ PERIMETER-OFFICE WIDTH $
          ..

    RUN-PERIOD  JAN 1 1981 THRU DEC 31 1981       ..

    BUILDING-LOCATION        LAT = 41.88  LON = 87.63
                             HEAT-PEAK-PERIOD = (8,18)
                             ALT = 600  T-Z = 6
                             ATM-MOISTURE=(.36,.32,.40,.53,.76,1.11,
                                           1.21,1.12,.88,.66,.43,.35)      $$
                             ATM-TURBIDITY=(.15,.18,.21,.18,.18,.19,
                                           .22,.16,.16,.14,.13,.15)        $$
                              ..

$-----SCHEDULES-----$

            INF-SCH = SCHEDULE THRU DEC 31
              (MON,FRI)    (1,5)   (1.0)
```

```
°  120 °                          (6,20)   (0.1)
°  121 °                          (21,24)  (1.0)
°  122 °              (SAT)       (1,5)    (1)
°  123 °                          (6,17)   (0.1)
°  124 °                          (18,24)  (1)
°  125 °              (SUN,HOL)   (1,24)   (1)    ..
°  126 °
°  127 °             OCC-SCH = SCHEDULE  THRU DEC 31
°  128 °               (MON,FRI)  (1,4)    (0)
°  129 °                          (5,8)    (0,0,.10,.20)
°  130 °                          (9,12)   (.95)
°  131 °                          (13,16)  (.50,.95,.95,.95)
°  132 °                          (17,20)  (.95,.30,.10,.10)
°  133 °                          (21,24)  (.05,.05,.05,0.)
°  134 °               (SAT)      (1,4)    (0)
°  135 °                          (5,8)    (0,0,.10,.10)
°  136 °                          (9,12)   (.30)
°  137 °                          (13,16)  (.10)
°  138 °                          (17,20)  (.10,.05,.05,0)
°  139 °                          (21,24)  (0)
°  140 °                 (SUN,HOL)  (1,24)  (0)    ..
°  141 °
°  142 °          CORE-LITE-SCH = SCHEDULE THRU DEC 31
°  143 °                (MON,FRI)  (1,4)    (.05)
°  144 °                           (5,8)    (.05,.05,.10,.30)
°  145 °                           (9,12)   (1.0)
°  146 °                           (13,16)  (.80,1.0,1.0,1.0)
°  147 °                           (17,20)  (1.0,.50,.30,.30)
°  148 °                           (21,24)  (.20,.20,.20,.05)
°  149 °                (SAT)      (1,4)    (.05)
°  150 °                           (5,8)    (.05,.05,.10,.10)
°  151 °                           (9,17)   (.30)
°  152 °                           (18,20)  (.05,.05,.05)
°  153 °                           (21,24)  (.05)
°  154 °                (SUN,HOL)  (1,24)   (.05)     ..
°  155 °
°  156 °           $-----MAX DIRECT SOLAR GAIN (BTUH/SF) FOR DRAPE CONTROL-----$
°  157 °
°  158 ° SOLGAIN-SCH-1  =SCHEDULE  THRU DEC 31 (ALL)(1,24)(20.)  ..          $$
°  159 °
°  160 °           $-----VIS TRANS MULTIPLIER FOR LIGHT-COLOR TRANSLUCENT DRAPES---$
°  161 °
°  162 ° TVIS-SCH-1     =SCHEDULE  THRU DEC 31 (ALL)(1,24)(.35)  ..          $$
°  163 °
°  164 °           $-----SHADING COEFF MULTIPLIER FOR DRAPES-----$
°  165 °
°  166 ° SHADSC-1       =SCHEDULE  THRU DEC 31 (ALL)(1,24)(0.6)  ..
°  167 °
°  168 °           $-----DAYLIGHTING REPORT SCHEDULE-----$
°  169 °
°  170 ° DAYREP-SCH-1  =SCHEDULE  THRU DEC 31 (ALL)(1,8)(0)(9,17)(1)(18,24)(0) ..   $$
°  171 °
°  172 ° $-----CONSTRUCTIONS-----$
°  173 °
°  174 °        EXTWALL = CONS     U = .10   ABS = .5   ..
°  175 °        PARTITION = CONS   U = 0.5 ..
°  176 °
°  177 ° $-----SET DEFAULTS-----$
°  178 °
°  179 °        SET-DEFAULT   FOR  E-W     H=10  X=0  Y=0  AZ=180  CONS=EXTWALL ..
°  180 °        SET-DEFAULT   FOR  I-W     CONS = PARTITION   ..
°  181 °        SET-DEFAULT   FOR WINDOW   SHADING-SCHEDULE = SHADSC-1
°  182 °                                   Y = 4                                $$
```

```
183                                 VIS-TRANS-SCH = TVIS-SCH-1                $$
184                                 MAX-SOLAR-SCH = SOLGAIN-SCH-1             $$
185                                 WIN-SHADE-TYPE = MOVABLE-INTERIOR         $$
186                                 ..
187        SET-DEFAULT   FOR SPACE  AREA = PERIM-OFF-AREA
188                                 DAYLIGHTING = YES                         $$
189                                 LIGHT-REF-POINT1 = (10,10,2.5)            $$
190                                 ZONE-FRACTION1 = 0.5                      $$
191                                 LIGHT-SET-POINT1 = 50                     $$
192                                 LIGHT-CTRL-TYPE1 = CONTINUOUS             $$
193                                 DAYLIGHT-REP-SCH = DAYREP-SCH-1           $$
194                                 ..
195
196  $-----SPACE CONDITIONS-----$
197
198        CORESPACE  = S-C       T = (75)
199                               P-SCH = OCC-SCH
200                               I-SCH = INF-SCH
201                               AREA/PERSON = 100
202                               P-H-G = 450
203                               L-SCH = CORE-LITE-SCH
204                               LIGHTING-W/SQFT = 2
205                               L-T-S = .75
206                               L-T-R = .25
207                               E-W = 1.0
208                               INF-METHOD = AIR-CHANGE
209                               AIR-CHANGES/HR = 0.6
210                               FLOOR-WEIGHT = 70
211                               Z-TYPE = CONDITIONED     ..
212
213        PERIMSPACE = S-C       LIKE CORESPACE  ..
214
215  $-----GLASS-TYPE-----$
216
217       PERIMGLASS = GLASS-TYPE   PANES=2  S-C=.83
218                                 VIS-TRANS=.68    ..                       $$
219
220  $-----SPACES-----$
221
222        COREZONE  = SPACE      DAYLIGHTING = NO                           $$
223                               AREA = CORE-AREA
224                               V = CORE-AREA TIMES 10.0
225                               S-C = CORESPACE          ..
226
227        NORTHZONE = SPACE      M=7
228                               DAYL-LTCTRL-FN = ('NONE','LTCTRL-FN-1')    $$
229                               X=110  Y=200  AZ=180
230                               V = PERIM-OFF-AREA TIMES 10
231                               S-C = PERIMSPACE       ..
232
233            N-LEFTPART =I-W     AREA=300   INT-WALL-TYPE = ADIABATIC ..
234            N-RIGHTPART=I-W     LIKE N-LEFTPART ..
235            NORTHPART = I-W     AREA=200   NEXT-TO = COREZONE ..
236            N-INTFLR  = I-W     INT-WALL-TYPE = ADIABATIC
237                                AREA=PERIM-OFF-AREA  TILT=180  ..         $$
238            N-INTCEIL = I-W     INT-WALL-TYPE = ADIABATIC
239                                AREA=PERIM-OFF-AREA  TILT=0    ..         $$
240            NORTHWALL = E-W     W = PERIM-OFF-WIDTH          ..
241            NORTHWIND = WI      W = PERIM-OFF-WIDTH   H = HWR TIMES 10.0
242                                GLASS-TYPE = PERIMGLASS
243                                ..
244
245        SOUTHZONE = SPACE      M=7
```

```
* 246 *                                X=90  Y=0  AZ=0
* 247 *                                V = PERIM-OFF-AREA TIMES 10.0
* 248 *                                S-C = PERIMSPACE        ..
* 249 *
* 250 *            S-LEFTPART =I-W      LIKE N-LEFTPART ..
* 251 *            S-RIGHTPART=I-W      LIKE S-LEFTPART  ..
* 252 *            SOUTHPART = I-W      LIKE NORTHPART      ..
* 253 *            SOUTHWALL = E-W      LIKE NORTHWALL      ..
* 254 *            SOUTHWIND = WI       W = PERIM-OFF-WIDTH    H = WWR TIMES 10.0
* 255 *                                 GLASS-TYPE = PERIMGLASS
* 256 *                                  ..
* 257 *            S-INTFLR  = I-W      LIKE N-INTFLR ..
* 258 *            S-INTCEIL = I-W      LIKE N-INTCEIL ..
* 259 *
* 260 *        EASTZONE  = SPACE       M=7
* 261 *                                X=200  Y=90  AZ=270
* 262 *                                V = PERIM-OFF-AREA TIMES 10.0
* 263 *                                S-C = PERIMSPACE      ..
* 264 *
* 265 *            E-LEFTPART=I-W       LIKE N-LEFTPART  ..
* 266 *            E-RIGHTPART=I-W      LIKE E-LEFTPART  ..
* 267 *            EASTPART = I-W       LIKE NORTHPART  ..
* 268 *            E-INTFLR = I-W       LIKE N-INTFLR ..
* 269 *            E-INTCEIL= I-W       LIKE N-INTCEIL  ..
* 270 *            EASTWALL = E-W       W = PERIM-OFF-WIDTH    ..
* 271 *            EASTWIND = WI        W = PERIM-OFF-WIDTH   H = WWR TIMES 10.0
* 272 *                                 GLASS-TYPE = PERIMGLASS
* 273 *                                 ..
* 274 *
* 275 *        WESTZONE  = SPACE       M=7
* 276 *                                X=0  Y=110  AZ=90
* 277 *                                V = PERIM-OFF-AREA TIMES 10.0
* 278 *                                S-C = PERIMSPACE     ..
* 279 *
* 280 *            W-LEFTPART=I-W       LIKE N-LEFTPART ..
* 281 *            W-RIGHTPART=I-W      LIKE W-LEFTPART ..
* 282 *            WESTPART = I-W       LIKE NORTHPART    ..
* 283 *            W-INTFLR = I-W       LIKE N-INTFLR ..
* 284 *            W-INTCEIL= I-W       LIKE N-INTCEIL   ..
* 285 *
* 286 *            WESTWALL = E-W       LIKE EASTWALL    ..
* 287 *            WESTWIND = WI        W = PERIM-OFF-WIDTH   H = WWR TIMES 10.0
* 288 *                                 GLASS-TYPE = PERIMGLASS
* 289 *                                 ..
* 290 *
* 291 *
* 292 *        LOADS-REPORT    S=(LS-C,LS-G,LS-H,LS-I,LS-J) V=(LV-L)
* 293 *                                 ..
* 294 *
* 295 * $-----HOURLY REPORTS-----$
* 296 *
* 297 * SCH-1    =SCHEDULE  THRU JAN 1 (ALL)(1,24)(0)
* 298 *                     THRU JAN 2 (ALL)(1,24)(1)
* 299 *                     THRU DEC 31 (ALL)(1,24)(0)
* 300 *                      ..
* 301 * BG       =R-B       V-T=GLOBAL
* 302 *                     V-L=(4,6,21,22,15,48,49,50,51,52,53,54,55,56,57,58,59)  ..
* 303 * BSN      =R-B       V-T=NORTHZONE
* 304 *                     V-L=(49,51,53,55,57,45) ..
* 305 * BSS      =R-B       LIKE BSN  V-T=SOUTHZONE  ..
* 306 * BSE      =R-B       LIKE BSN  V-T=EASTZONE   ..
* 307 * BSW      =R-B       LIKE BSN  V-T=WESTZONE   ..
* 308 *
```

```
* 309 * BWN      =R-B       V-T=NORTHWIND
* 310 *                     V-L=(1,2,4,10,11,12,15,17,23,16,19,21,22,20,23,26) ..
* 311 * BWS      =R-B       LIKE BWN  V-T=SOUTHWIND ..
* 312 * BWE      =R-B       LIKE BWN  V-T=EASTWIND  ..
* 313 * BWW      =R-B       LIKE BWN  V-T=WESTWIND  ..
* 314 *
* 315 * REP1     =H-R       R-SCH=SCH-1  R-B=(BG) ..
* 316 * REP2     =H-R       R-SCH=SCH-1  R-B=(BSN,BSS,BSE,BSW) ..
* 317 * REP3     =H-R       R-SCH=SCH-1  R-B=(BWN,BWS) ..
* 318 * REP4     =H-R       R-SCH=SCH-1  R-B=(BWE,BWW) ..
* 319 *
* 320 * PLTSCH  = SCHEDULE THRU JAN 1 (ALL) (1,24) (0)
* 321 *                   THRU JAN 2 (ALL) (1,6)(0) (7,19)(1) (20,24)(0)
* 322 *                   THRU DEC 31 (ALL) (1,24) (0)  ..
* 323 * PLOTER1 = REPORT-BLOCK
* 324 *           VARIABLE-TYPE = GLOBAL
* 325 *           VARIABLE-LIST = (15) .. $GLOBAL HORIZONTAL SOLAR
* 326 *
* 327 * PLOTER2 = REPORT-BLOCK
* 328 *           VARIABLE-TYPE = SOUTHZONE
* 329 *           VARIABLE-LIST = (49) .. $DAYL ILLUM, REF PT 1
* 330 *
* 331 * PLOTD = HOURLY-REPORT
* 332 *         REPORT-SCHEDULE=PLTSCH
* 333 *         REPORT-BLOCK   = (PLOTER1,PLOTER2)
* 334 *         OPTION         = PLOT
* 335 *         AXIS-ASSIGN    = (1,2)
* 336 *         AXIS-TITLES    = (°EXTERIOR SOLAR°,°INTERIOR DAYLITE°)
* 337 *         AXIS-MAX       = (500,100)
* 338 *         AXIS-MIN       = (0,0)
* 339 *         DIVIDE         = (1,1)  ..
* 340 * END  ..
* 341 *
* 342 *
* 343 *    $ NORTHZONE DIMMING SYSTEM HAS NON-LINEAR POWER CURVE --
* 344 *    $ APPROXIMATE THE CURVE WITH THREE STRAIGHT SEGMENTS CONNECTING THE
* 345 *    $ (LIGHT OUT, POWER IN) POINTS (0,0),(.3,.5),(.6,.8),(1,1)
* 346 *
* 347 *
* 348 *           FUNCTION  NAME=LTCTRL-FN-1  LEVEL=SPACE ..                    $$
* 349 *           ASSIGN    ILLUM=DAYLIGHT-ILLUM1                               $$
* 350 *                     PMUL1=FPHRP1                                        $$
* 351 *                     PMUL=POWER-RED-FAC                                  $$
* 352 *                     ZF1=ZONE-FRACTION1                                  $$
* 353 *                     SETPT=LIGHT-SET-POINT1      ..                      $$
* 354 *           ASSIGN    POWCRV=TABLE (0,0) (0.3,0.5) (0.6,0.8) (1.0,1.0) .. $$
* 355 *           CALCULATE ..                                                  $$
* 356 *        FLTOUT = (SETPT - ILLUM)/SETPT                                   $$
* 357 *        IF (FLTOUT.LT.0.0) FLTOUT = 0.0                                  $$
* 358 *        PMUL1 = PWL(POWCRV,FLTOUT)                                       $$
* 359 *        PMUL = PMUL1°ZF1 + (1.0-ZF1)                                     $$
* 360 *        END                                                              $$
```

```
------------------------------------------ S Y M B O L   T A B L E ------------------------------------------

FLTOUT   °°LOCAL°      ILLUM    (GLOBAL)      PMUL     (GLOBAL)      PMUL1    (GLOBAL)      POWCRV   (TABLE)
SETPT    (GLOBAL)      ZF1      (GLOBAL)

-------------------------------------------------------------------------------------------------------------
```

```
* 361 *           END-FUNCTION ..                                               $$
* 362 *
* 363 * COMPUTE LOADS ..
```

DAYLIGHTING EXAMPLE FLOOR OF OFFICE BUILDING IN CHICAGO Fri Nov 5 21:58:52 1993LDL RUN 1
30-FT DEEP PERIM OFFS DAYLIT TO 15 FT AUTO SHADE MANAGEMENT FOR SUN CONTROL
REPORT- LV-L DAYLIGHT FACTOR SUMMARY FOR NORTHZONE

SPACE--NORTHZONE
AREA(SQFT) 600.0
AV REFL 0.46
MAX-GLARE 100.0
VW-AZ(DEG) 90.0

WINDOW--NORTHWIND
SC 0.83 GTC 1 VIS-TRANS 0.68
H(FT) 3.0 W(FT) 20.0
AZIM(DEG) 0.0 TILT(DEG) 90.0
DAY-X-DIV 8 DAY-Y-DIV 8
X(FT) 0.0 Y(FT) 0.0 Z(FT) 4.0
WIN-SHADE-TYPE MOVABLE-INTERIOR

REF PT NO.--1
X(FT) 10.0 Y(FT) 10.0 Z(FT) 2.5
ZONE-FRACTION 0.50
LTG-SET-POINT(FC) 50.0
LTG-CTRL-TYPE CONTINUOUS

SUN POS NO.	DAY TYP	WIN SHD IND	SUN ALT (DEG)	SUN AZIM (DEG)	EXT ILL -SKY (FC)	EXT ILL -SUN (FC)	DIR ILL -SKY (FC)	REFL ILL -SKY (FC)	DIR ILL -SUN (FC)	REFL ILL -SUN (FC)	DAY ILL FAC -SKY	DAY ILL FAC -SUN	WIN LUM FAC -SKY	WIN LUM FAC -SUN	BACKG LUM FAC -SKY	BACKG LUM FAC -SUN	GLARE INDEX
1	1	1	10.	290.	1331.8	164.6	63.3	21.0	0.0	4.5	0.0633	0.0273	1.7388	0.0000	0.0073	0.0126	15.2
1	1	2	10.	290.	1331.8	164.6	35.7	27.9	7.9	6.2	0.0477	0.0860	0.8656	1.5607	0.0097	0.0175	13.4
1	2	1	10.	290.	366.9	0.0	7.5	3.2	0.0	0.0	0.0291	0.0000	0.6355	0.0000	0.0041	0.0000	4.9
1	2	2	10.	290.	366.9	0.0	5.1	4.0	0.0	0.0	0.0246	0.0000	0.4461	0.0000	0.0050	0.0000	2.9
2	1	1	10.	235.	1331.8	164.6	43.6	13.8	0.0	0.5	0.0431	0.0029	1.1225	0.0000	0.0048	0.0013	13.6
2	1	2	10.	235.	1331.8	164.6	22.3	17.4	0.5	0.4	0.0299	0.0050	0.5417	0.0909	0.0061	0.0010	10.7
3	1	1	10.	180.	1331.8	164.6	49.0	14.0	0.0	0.5	0.0473	0.0029	1.2276	0.0000	0.0049	0.0013	14.0
3	1	2	10.	180.	1331.8	164.6	22.6	17.7	0.5	0.4	0.0303	0.0050	0.5491	0.0909	0.0062	0.0010	10.8
4	1	1	10.	125.	1331.8	164.6	43.6	13.8	0.0	0.5	0.0431	0.0029	1.1225	0.0000	0.0048	0.0013	13.6
4	1	2	10.	125.	1331.8	164.6	22.3	17.4	0.5	0.4	0.0299	0.0050	0.5417	0.0909	0.0061	0.0010	10.7
5	1	1	10.	70.	1331.8	164.6	63.3	21.0	0.0	4.5	0.0633	0.0273	1.7388	0.0000	0.0073	0.0126	15.2
5	1	2	10.	70.	1331.8	164.6	35.7	27.9	7.9	6.2	0.0477	0.0860	0.8656	1.5607	0.0097	0.0175	13.4
6	1	1	31.	290.	2104.9	2160.2	85.4	28.9	0.0	20.8	0.0543	0.0096	1.4371	0.0000	0.0064	0.0045	16.1
6	1	2	31.	290.	2104.9	2160.2	48.5	37.9	33.2	25.9	0.0411	0.0274	0.7447	0.4965	0.0083	0.0056	15.4
7	1	1	31.	235.	2104.9	2160.2	55.9	19.2	0.0	6.2	0.0357	0.0029	0.9123	0.0000	0.0042	0.0013	14.6
7	1	2	31.	235.	2104.9	2160.2	30.4	23.8	6.1	4.7	0.0257	0.0050	0.4668	0.0909	0.0052	0.0010	12.7
8	1	1	31.	180.	2104.9	2160.2	59.2	18.7	0.0	6.2	0.0370	0.0029	0.9448	0.0000	0.0041	0.0013	14.7
8	1	2	31.	180.	2104.9	2160.2	29.5	23.0	6.1	4.7	0.0249	0.0050	0.4525	0.0909	0.0051	0.0010	12.6
9	1	1	31.	125.	2104.9	2160.2	55.9	19.2	0.0	6.2	0.0357	0.0029	0.9123	0.0000	0.0042	0.0013	14.6
9	1	2	31.	125.	2104.9	2160.2	30.4	23.8	6.1	4.7	0.0257	0.0050	0.4668	0.0909	0.0052	0.0010	12.7
10	1	1	31.	70.	2104.9	2160.2	85.4	28.9	0.0	20.8	0.0543	0.0096	1.4371	0.0000	0.0064	0.0045	16.1
10	1	2	31.	70.	2104.9	2160.2	48.5	37.9	33.2	25.9	0.0411	0.0274	0.7447	0.4965	0.0083	0.0056	15.4
11	1	1	51.	290.	2565.4	4622.3	84.2	29.8	0.0	25.3	0.0444	0.0055	1.1134	0.0000	0.0054	0.0025	15.8
11	1	2	51.	290.	2565.4	4622.3	48.9	38.2	35.3	27.6	0.0339	0.0136	0.6155	0.2465	0.0069	0.0028	15.5
12	1	1	51.	235.	2565.4	4622.3	59.8	21.9	0.0	13.3	0.0319	0.0029	0.7948	0.0000	0.0040	0.0013	14.8
12	1	2	51.	235.	2565.4	4622.3	34.3	26.8	13.0	10.2	0.0238	0.0050	0.4317	0.0909	0.0048	0.0010	13.7
13	1	1	51.	180.	2565.4	4622.3	58.9	20.8	0.0	13.3	0.0310	0.0029	0.7744	0.0000	0.0037	0.0013	14.7
13	1	2	51.	180.	2565.4	4622.3	32.1	25.1	13.0	10.2	0.0223	0.0050	0.4042	0.0909	0.0045	0.0010	13.5
14	1	1	51.	125.	2565.4	4622.3	59.8	21.9	0.0	13.3	0.0319	0.0029	0.7948	0.0000	0.0040	0.0013	14.8
14	1	2	51.	125.	2565.4	4622.3	34.3	26.8	13.0	10.2	0.0238	0.0050	0.4317	0.0909	0.0048	0.0010	13.7
15	1	1	51.	70.	2565.4	4622.3	84.2	29.8	0.0	25.3	0.0444	0.0055	1.1134	0.0000	0.0054	0.0025	15.8
15	1	2	51.	70.	2565.4	4622.3	48.9	38.2	35.3	27.6	0.0339	0.0136	0.6155	0.2465	0.0069	0.0028	15.5
16	1	1	72.	290.	3143.7	6245.4	86.1	31.7	0.0	21.8	0.0375	0.0035	0.9082	0.0000	0.0047	0.0016	15.9
16	1	2	72.	290.	3143.7	6245.4	51.0	39.9	24.5	19.2	0.0289	0.0070	0.5244	0.1270	0.0059	0.0014	15.2
17	1	1	72.	235.	3143.7	6245.4	71.6	27.1	0.0	18.0	0.0314	0.0029	0.7654	0.0000	0.0040	0.0013	15.3
17	1	2	72.	235.	3143.7	6245.4	42.4	33.1	17.6	13.7	0.0240	0.0050	0.4357	0.0909	0.0049	0.0010	14.6
18	1	1	72.	180.	3143.7	6245.4	68.2	25.7	0.0	18.0	0.0299	0.0029	0.7292	0.0000	0.0038	0.0013	15.2
18	1	2	72.	180.	3143.7	6245.4	39.9	31.2	17.6	13.7	0.0226	0.0050	0.4099	0.0909	0.0046	0.0010	14.4
19	1	1	72.	125.	3143.7	6245.4	71.6	27.1	0.0	18.0	0.0314	0.0029	0.7654	0.0000	0.0040	0.0013	15.3
19	1	2	72.	125.	3143.7	6245.4	42.4	33.1	17.6	13.7	0.0240	0.0050	0.4357	0.0909	0.0049	0.0010	14.6
20	1	1	72.	70.	3143.7	6245.4	86.1	31.7	0.0	21.8	0.0375	0.0035	0.9082	0.0000	0.0047	0.0016	15.9
20	1	2	72.	70.	3143.7	6245.4	51.0	39.9	24.5	19.2	0.0289	0.0070	0.5244	0.1270	0.0059	0.0014	15.2

NOTE -- ABOVE VALUES ASSUME VISIBLE TRANSMITTANCE = 1.0 FOR WINDOW GLASS AND SHADING DEVICE.
ACTUAL TRANSMITTANCES ARE USED IN THE HOURLY CALCULATION.

DAYLIGHTING EXAMPLE FLOOR OF OFFICE BUILDING IN CHICAGO Fri Nov 5 21:58:52 1993LDL RUN 1
30-FT DEEP PERIM OFFS DAYLIT TO 15 FT AUTO SHADE MANAGEMENT FOR SUN CONTROL
REPORT- LV-L DAYLIGHT FACTOR SUMMARY FOR SOUTHZONE

SPACE--SOUTHZONE
AREA(SQFT) 600.0
AV REFL 0.46
MAX-GLARE 100.0
VW-AZ(DEG) 270.0

WINDOW--SOUTHWIND
SC 0.83 GTC 1 VIS-TRANS 0.68
H(FT) 3.0 W(FT) 20.0
AZIM(DEG) 180.0 TILT(DEG) 90.0
DAY-X-DIV 8 DAY-Y-DIV 8
X(FT) 0.0 Y(FT) 0.0 Z(FT) 4.0
WIN-SHADE-TYPE MOVABLE-INTERIOR

REF PT NO.--1
X(FT) 10.0 Y(FT) 10.0 Z(FT) 2.5
ZONE-FRACTION 0.50
LTG-SET-POINT(FC) 50.0
LTG-CTRL-TYPE CONTINUOUS

SUN POS NO.	DAY TYP	WIN SHD IND	SUN ALT (DEG)	SUN AZIM (DEG)	EXT ILL -SKY (FC)	EXT ILL -SUN (FC)	DIR ILL -SKY (FC)	REFL ILL -SKY (FC)	DIR ILL -SUN (FC)	REFL ILL -SUN (FC)	DAY ILL FAC -SKY	DAY ILL FAC -SUN	WIN LUM FAC -SKY	WIN LUM FAC -SUN	BACKG LUM FAC -SKY	BACKG LUM FAC -SUN	GLARE INDEX
1	1	1	10.	290.	1331.8	164.6	43.1	14.3	0.0	0.5	0.0431	0.0029	1.1282	0.0000	0.0050	0.0013	13.7
1	1	2	10.	290.	1331.8	164.6	23.2	18.1	0.5	0.4	0.0311	0.0050	0.5635	0.0909	0.0063	0.0010	10.9
1	2	1	10.	290.	366.9	0.0	7.5	3.2	0.0	0.0	0.0291	0.0000	0.6355	0.0000	0.0041	0.0000	4.9
1	2	2	10.	290.	366.9	0.0	5.1	4.0	0.0	0.0	0.0246	0.0000	0.4461	0.0000	0.0050	0.0000	2.9
2	1	1	10.	235.	1331.8	164.6	90.7	25.7	0.0	8.8	0.0874	0.0535	2.5584	0.0000	0.0089	0.0248	16.5
2	1	2	10.	235.	1331.8	164.6	44.5	34.8	16.0	12.5	0.0595	0.1731	1.0793	3.1409	0.0121	0.0352	14.6
3	1	1	10.	180.	1331.8	164.6	197.8	36.4	164.1	15.9	0.1758	1.0938	4.4036	0.0000	0.0126	0.0448	18.1
3	1	2	10.	180.	1331.8	164.6	64.3	50.3	29.3	22.9	0.0860	0.3167	1.5609	5.7454	0.0175	0.0643	15.8
4	1	1	10.	125.	1331.8	164.6	90.7	25.7	0.0	8.8	0.0874	0.0535	2.5584	0.0000	0.0089	0.0248	16.5
4	1	2	10.	125.	1331.8	164.6	44.5	34.8	16.0	12.5	0.0595	0.1731	1.0793	3.1409	0.0121	0.0352	14.6
5	1	1	10.	70.	1331.8	164.6	43.1	14.3	0.0	0.5	0.0431	0.0029	1.1282	0.0000	0.0050	0.0013	13.7
5	1	2	10.	70.	1331.8	164.6	23.2	18.1	0.5	0.4	0.0311	0.0050	0.5635	0.0909	0.0063	0.0010	10.9
6	1	1	31.	290.	2104.9	2160.2	57.2	20.2	0.0	6.2	0.0367	0.0029	0.9412	0.0000	0.0044	0.0013	14.7
6	1	2	31.	290.	2104.9	2160.2	32.2	25.2	6.1	4.7	0.0273	0.0050	0.4949	0.0909	0.0055	0.0010	12.9
7	1	1	31.	235.	2104.9	2160.2	115.1	34.5	0.0	37.7	0.0711	0.0175	1.9308	0.0000	0.0076	0.0081	16.8
7	1	2	31.	235.	2104.9	2160.2	58.8	46.0	64.7	50.6	0.0498	0.0534	0.9034	0.9679	0.0101	0.0108	16.5
8	1	1	31.	180.	2104.9	2160.2	229.9	47.0	0.0	66.1	0.1316	0.0306	3.1907	0.0000	0.0103	0.0142	18.2
8	1	2	31.	180.	2104.9	2160.2	82.1	64.2	117.5	91.8	0.0695	0.0969	1.2605	1.7581	0.0141	0.0197	17.8
9	1	1	31.	125.	2104.9	2160.2	115.1	34.5	0.0	37.7	0.0711	0.0175	1.9308	0.0000	0.0076	0.0081	16.8
9	1	2	31.	125.	2104.9	2160.2	58.8	46.0	64.7	50.6	0.0498	0.0534	0.9034	0.9679	0.0101	0.0108	16.5
10	1	1	31.	70.	2104.9	2160.2	57.2	20.2	0.0	6.2	0.0367	0.0029	0.9412	0.0000	0.0044	0.0013	14.7
10	1	2	31.	70.	2104.9	2160.2	32.2	25.2	6.1	4.7	0.0273	0.0050	0.4949	0.0909	0.0055	0.0010	12.9
11	1	1	51.	290.	2565.4	4622.3	62.4	23.1	0.0	13.3	0.0333	0.0029	0.8317	0.0000	0.0042	0.0013	14.9
11	1	2	51.	290.	2565.4	4622.3	36.4	28.4	13.0	10.2	0.0253	0.0050	0.4585	0.0909	0.0051	0.0010	13.9
12	1	1	51.	235.	2565.4	4622.3	99.4	33.4	0.0	41.3	0.0518	0.0089	1.2972	0.0000	0.0060	0.0041	16.1
12	1	2	51.	235.	2565.4	4622.3	55.7	43.5	65.1	50.9	0.0387	0.0251	0.7013	0.4550	0.0079	0.0051	16.5
13	1	1	51.	180.	2565.4	4622.3	145.2	41.7	0.0	72.7	0.0729	0.0157	1.7541	0.0000	0.0075	0.0073	16.8
13	1	2	51.	180.	2565.4	4622.3	71.2	55.6	123.6	96.6	0.0494	0.0477	0.8964	0.8645	0.0100	0.0097	17.7
14	1	1	51.	125.	2565.4	4622.3	99.4	33.4	0.0	41.3	0.0518	0.0089	1.2972	0.0000	0.0060	0.0041	16.1
14	1	2	51.	125.	2565.4	4622.3	55.7	43.5	65.1	50.9	0.0387	0.0251	0.7013	0.4550	0.0079	0.0051	16.5
15	1	1	51.	70.	2565.4	4622.3	62.4	23.1	0.0	13.3	0.0333	0.0029	0.8317	0.0000	0.0042	0.0013	14.9
15	1	2	51.	70.	2565.4	4622.3	36.4	28.4	13.0	10.2	0.0253	0.0050	0.4585	0.0909	0.0051	0.0010	13.9
16	1	1	72.	290.	3143.7	6245.4	74.3	28.0	0.0	18.0	0.0325	0.0029	0.7923	0.0000	0.0041	0.0013	15.5
16	1	2	72.	290.	3143.7	6245.4	44.1	34.5	17.6	13.7	0.0250	0.0050	0.4534	0.0909	0.0051	0.0010	14.7
17	1	1	72.	235.	3143.7	6245.4	91.7	33.3	0.0	27.8	0.0398	0.0044	0.9617	0.0000	0.0049	0.0021	16.0
17	1	2	72.	235.	3143.7	6245.4	54.0	42.2	35.7	27.9	0.0306	0.0102	0.5556	0.1850	0.0062	0.0021	15.7
18	1	1	72.	180.	3143.7	6245.4	105.0	36.8	0.0	43.2	0.0451	0.0069	1.0806	0.0000	0.0054	0.0032	16.1
18	1	2	72.	180.	3143.7	6245.4	60.6	47.3	64.4	50.3	0.0343	0.0184	0.6226	0.3333	0.0070	0.0037	16.6
19	1	1	72.	125.	3143.7	6245.4	91.7	33.3	0.0	27.8	0.0398	0.0044	0.9617	0.0000	0.0049	0.0021	16.0
19	1	2	72.	125.	3143.7	6245.4	54.0	42.2	35.7	27.9	0.0306	0.0102	0.5556	0.1850	0.0062	0.0021	15.7
20	1	1	72.	70.	3143.7	6245.4	74.3	28.0	0.0	18.0	0.0325	0.0029	0.7923	0.0000	0.0041	0.0013	15.5
20	1	2	72.	70.	3143.7	6245.4	44.1	34.5	17.6	13.7	0.0250	0.0050	0.4534	0.0909	0.0051	0.0010	14.7

NOTE -- ABOVE VALUES ASSUME VISIBLE TRANSMITTANCE = 1.0 FOR WINDOW GLASS AND SHADING DEVICE.
ACTUAL TRANSMITTANCES ARE USED IN THE HOURLY CALCULATION.

DAYLIGHTING EXAMPLE FLOOR OF OFFICE BUILDING IN CHICAGO Fri Nov 5 21:58:52 1993LDL RUN 1
30-FT DEEP PERIM OFFS DAYLIT TO 15 FT AUTO SHADE MANAGEMENT FOR SUN CONTROL
REPORT- LV-L DAYLIGHT FACTOR SUMMARY FOR EASTZONE

SPACE--EASTZONE
AREA(SQFT) 600.0
AV REFL 0.46
MAX-GLARE 100.0
VW-AZ(DEG) 180.0

WINDOW--EASTWIND
SC 0.83 GTC 1 VIS-TRANS 0.68
H(FT) 3.0 W(FT) 20.0
AZIM(DEG) 90.0 TILT(DEG) 90.0
DAY-X-DIV 8 DAY-Y-DIV 8
X(FT) 0.0 Y(FT) 0.0 Z(FT) 4.0
WIN-SHADE-TYPE MOVABLE-INTERIOR

REF PT NO.--1
X(FT) 10.0 Y(FT) 10.0 Z(FT) 2.5
ZONE-FRACTION 0.50
LTG-SET-POINT(FC) 50.0
LTG-CTRL-TYPE CONTINUOUS

SUN POS NO.	DAY TYP	WIN SHD IND	SUN ALT (DEG)	SUN AZIM (DEG)	EXT ILL -SKY (FC)	EXT ILL -SUN (FC)	DIR ILL -SKY (FC)	REFL ILL -SKY (FC)	DIR ILL -SUN (FC)	REFL ILL -SUN (FC)	DAY ILL FAC -SKY	DAY ILL FAC -SUN	WIN LUM FAC -SKY	WIN LUM FAC -SUN	BACKG LUM FAC -SKY	BACKG LUM FAC -SUN	GLARE INDEX
1	1	1	10.	290.	1331.8	164.6	47.9	13.9	0.0	0.5	0.0464	0.0029	1.2053	0.0000	0.0048	0.0013	13.9
1	1	2	10.	290.	1331.8	164.6	22.5	17.6	0.5	0.4	0.0301	0.0050	0.5453	0.0909	0.0061	0.0010	10.8
1	2	1	10.	290.	366.9	0.0	7.5	3.2	0.0	0.0	0.0291	0.0000	0.6355	0.0000	0.0041	0.0000	4.9
1	2	2	10.	290.	366.9	0.0	5.1	4.0	0.0	0.0	0.0246	0.0000	0.4461	0.0000	0.0050	0.0000	2.9
2	1	1	10.	235.	1331.8	164.6	46.1	13.8	0.0	0.5	0.0449	0.0029	1.1676	0.0000	0.0048	0.0013	13.8
2	1	2	10.	235.	1331.8	164.6	22.3	17.4	0.5	0.4	0.0298	0.0050	0.5402	0.0909	0.0060	0.0010	10.7
3	1	1	10.	180.	1331.8	164.6	47.5	16.4	0.0	0.5	0.0479	0.0029	1.2688	0.0000	0.0057	0.0013	14.1
3	1	2	10.	180.	1331.8	164.6	27.1	21.1	0.5	0.4	0.0362	0.0050	0.6565	0.0909	0.0074	0.0010	11.6
4	1	1	10.	125.	1331.8	164.6	154.0	31.4	161.4	12.9	0.1392	1.0592	4.2159	99.0000	0.0109	0.0364	21.9
4	1	2	10.	125.	1331.8	164.6	55.1	43.1	23.7	18.5	0.0737	0.2561	1.3370	4.6464	0.0150	0.0520	15.4
5	1	1	10.	70.	1331.8	164.6	186.2	34.8	162.7	14.9	0.1660	1.0791	4.4863	0.0000	0.0121	0.0419	18.2
5	1	2	10.	70.	1331.8	164.6	61.5	48.0	27.3	21.3	0.0822	0.2955	1.4912	5.3599	0.0167	0.0600	15.7
6	1	1	31.	290.	2104.9	2160.2	58.4	18.7	0.0	6.2	0.0366	0.0029	0.9348	0.0000	0.0041	0.0013	14.6
6	1	2	31.	290.	2104.9	2160.2	29.5	23.0	6.1	4.7	0.0249	0.0050	0.4523	0.0909	0.0051	0.0010	12.6
7	1	1	31.	235.	2104.9	2160.2	57.1	18.8	0.0	6.2	0.0360	0.0029	0.9197	0.0000	0.0041	0.0013	14.6
7	1	2	31.	235.	2104.9	2160.2	29.6	23.1	6.1	4.7	0.0250	0.0050	0.4539	0.0909	0.0051	0.0010	12.6
8	1	1	31.	180.	2104.9	2160.2	64.8	23.2	0.0	6.2	0.0418	0.0029	1.0804	0.0000	0.0051	0.0013	15.1
8	1	2	31.	180.	2104.9	2160.2	37.8	29.6	6.1	4.7	0.0320	0.0050	0.5807	0.0909	0.0065	0.0010	13.4
9	1	1	31.	125.	2104.9	2160.2	172.3	41.3	0.0	54.7	0.1015	0.0253	2.7318	0.0000	0.0091	0.0117	17.8
9	1	2	31.	125.	2104.9	2160.2	71.5	55.9	96.3	75.3	0.0605	0.0794	1.0980	1.4408	0.0123	0.0161	17.3
10	1	1	31.	70.	2104.9	2160.2	209.8	45.1	0.0	62.3	0.1211	0.0288	3.0729	0.0000	0.0099	0.0134	18.1
10	1	2	31.	70.	2104.9	2160.2	78.7	61.5	110.5	86.3	0.0666	0.0911	1.2081	1.6530	0.0135	0.0185	17.6
11	1	1	51.	290.	2565.4	4622.3	58.7	20.9	0.0	13.3	0.0310	0.0029	0.7742	0.0000	0.0038	0.0013	14.7
11	1	2	51.	290.	2565.4	4622.3	32.3	25.2	13.0	10.2	0.0224	0.0050	0.4067	0.0909	0.0046	0.0010	13.6
12	1	1	51.	235.	2565.4	4622.3	58.7	21.1	0.0	13.3	0.0311	0.0029	0.7766	0.0000	0.0038	0.0013	14.7
12	1	2	51.	235.	2565.4	4622.3	32.8	25.6	13.0	10.2	0.0228	0.0050	0.4129	0.0909	0.0046	0.0010	13.6
13	1	1	51.	180.	2565.4	4622.3	70.0	25.7	0.0	13.3	0.0373	0.0029	0.9328	0.0000	0.0046	0.0013	15.3
13	1	2	51.	180.	2565.4	4622.3	41.3	32.3	13.0	10.2	0.0287	0.0050	0.5199	0.0909	0.0058	0.0010	14.2
14	1	1	51.	125.	2565.4	4622.3	122.6	37.9	0.0	59.8	0.0626	0.0129	1.5491	0.0000	0.0068	0.0060	16.5
14	1	2	51.	125.	2565.4	4622.3	64.1	50.1	99.5	77.7	0.0445	0.0383	0.8074	0.6955	0.0090	0.0078	17.3
15	1	1	51.	70.	2565.4	4622.3	137.1	40.5	0.0	68.5	0.0692	0.0148	1.6859	0.0000	0.0073	0.0069	16.7
15	1	2	51.	70.	2565.4	4622.3	68.8	53.8	115.8	90.5	0.0478	0.0446	0.8670	0.8094	0.0097	0.0091	17.6
16	1	1	72.	290.	3143.7	6245.4	68.6	25.9	0.0	18.0	0.0300	0.0029	0.7334	0.0000	0.0038	0.0013	15.2
16	1	2	72.	290.	3143.7	6245.4	40.2	31.4	17.6	13.7	0.0228	0.0050	0.4131	0.0909	0.0046	0.0010	14.4
17	1	1	72.	235.	3143.7	6245.4	69.4	26.3	0.0	18.0	0.0304	0.0029	0.7426	0.0000	0.0039	0.0013	15.2
17	1	2	72.	235.	3143.7	6245.4	40.8	31.9	17.6	13.7	0.0231	0.0050	0.4199	0.0909	0.0047	0.0010	14.5
18	1	1	72.	180.	3143.7	6245.4	79.3	29.7	0.0	18.0	0.0347	0.0029	0.8429	0.0000	0.0044	0.0013	15.7
18	1	2	72.	180.	3143.7	6245.4	47.2	36.9	17.6	13.7	0.0267	0.0050	0.4851	0.0909	0.0054	0.0010	14.8
19	1	1	72.	125.	3143.7	6245.4	98.9	35.3	0.0	36.2	0.0427	0.0058	1.0269	0.0000	0.0052	0.0027	16.0
19	1	2	72.	125.	3143.7	6245.4	57.7	45.1	51.3	40.1	0.0327	0.0146	0.5927	0.2657	0.0066	0.0030	16.2
20	1	1	72.	70.	3143.7	6245.4	102.9	36.3	0.0	40.8	0.0443	0.0065	1.0622	0.0000	0.0053	0.0030	16.1
20	1	2	72.	70.	3143.7	6245.4	59.6	46.6	59.9	46.8	0.0338	0.0171	0.6124	0.3102	0.0069	0.0035	16.4

NOTE -- ABOVE VALUES ASSUME VISIBLE TRANSMITTANCE = 1.0 FOR WINDOW GLASS AND SHADING DEVICE.
ACTUAL TRANSMITTANCES ARE USED IN THE HOURLY CALCULATION.

DAYLIGHTING EXAMPLE FLOOR OF OFFICE BUILDING IN CHICAGO Fri Nov 5 21:58:52 1993LDL RUN 1
30-FT DEEP PERIM OFFS DAYLIT TO 15 FT AUTO SHADE MANAGEMENT FOR SUN CONTROL
REPORT- LV-L DAYLIGHT FACTOR SUMMARY FOR WESTZONE

SPACE--WESTZONE
AREA(SQFT) 600.0
AV REFL 0.46
MAX-GLARE 100.0
VW-AZ(DEG) 0.0

WINDOW--WESTWIND
SC 0.83 GTC 1 VIS-TRANS 0.68
H(FT) 3.0 W(FT) 20.0
AZIM(DEG) 270.0 TILT(DEG) 90.0
DAY-X-DIV 8 DAY-Y-DIV 8
X(FT) 0.0 Y(FT) 0.0 Z(FT) 4.0
WIN-SHADE-TYPE MOVABLE-INTERIOR

REF PT NO.--1
X(FT) 10.0 Y(FT) 10.0 Z(FT) 2.5
ZONE-FRACTION 0.50
LTG-SET-POINT(FC) 50.0
LTG-CTRL-TYPE CONTINUOUS

SUN POS NO.	DAY TYP	WIN SHD IND	SUN ALT (DEG)	SUN AZIM (DEG)	EXT ILL -SKY (FC)	EXT ILL -SUN (FC)	DIR ILL -SKY (FC)	REFL ILL -SKY (FC)	DIR ILL -SUN (FC)	REFL ILL -SUN (FC)	DAY ILL FAC -SKY	DAY ILL FAC -SUN	WIN LUM FAC -SKY	WIN LUM FAC -SUN	BACKG LUM FAC -SKY	BACKG LUM FAC -SUN	GLARE INDEX
1	1	1	10.	290.	1331.8	164.6	186.2	34.8	162.7	14.9	0.1660	1.0791	4.4863	99.0000	0.0121	0.0419	21.9
1	1	2	10.	290.	1331.8	164.6	61.5	48.0	27.3	21.3	0.0822	0.2955	1.4912	5.3599	0.0167	0.0600	15.7
1	2	1	10.	290.	366.9	0.0	7.5	3.2	0.0	0.0	0.0291	0.0000	0.6355	0.0000	0.0041	0.0000	4.9
1	2	2	10.	290.	366.9	0.0	5.1	4.0	0.0	0.0	0.0246	0.0000	0.4461	0.0000	0.0050	0.0000	2.9
2	1	1	10.	235.	1331.8	164.6	154.0	31.4	161.4	12.9	0.1392	1.0592	4.2159	0.0000	0.0109	0.0364	18.0
2	1	2	10.	235.	1331.8	164.6	55.1	43.1	23.7	18.5	0.0737	0.2561	1.3370	4.6464	0.0150	0.0520	15.4
3	1	1	10.	180.	1331.8	164.6	47.5	16.4	0.0	0.5	0.0479	0.0029	1.2688	0.0000	0.0057	0.0013	14.1
3	1	2	10.	180.	1331.8	164.6	27.1	21.1	0.5	0.4	0.0362	0.0050	0.6565	0.0909	0.0074	0.0010	11.6
4	1	1	10.	125.	1331.8	164.6	46.1	13.8	0.0	0.5	0.0449	0.0029	1.1676	0.0000	0.0048	0.0013	13.8
4	1	2	10.	125.	1331.8	164.6	22.3	17.4	0.5	0.4	0.0298	0.0050	0.5402	0.0909	0.0060	0.0010	10.7
5	1	1	10.	70.	1331.8	164.6	47.9	13.9	0.0	0.5	0.0464	0.0029	1.2053	0.0000	0.0048	0.0013	13.9
5	1	2	10.	70.	1331.8	164.6	22.5	17.6	0.5	0.4	0.0301	0.0050	0.5453	0.0909	0.0061	0.0010	10.8
6	1	1	31.	290.	2104.9	2160.2	209.8	45.1	0.0	62.3	0.1211	0.0288	3.0729	0.0000	0.0099	0.0134	18.1
6	1	2	31.	290.	2104.9	2160.2	78.7	61.5	110.5	86.3	0.0666	0.0911	1.2081	1.6530	0.0135	0.0185	17.6
7	1	1	31.	235.	2104.9	2160.2	172.3	41.3	0.0	54.7	0.1015	0.0253	2.7318	0.0000	0.0091	0.0117	17.8
7	1	2	31.	235.	2104.9	2160.2	71.5	55.9	96.3	75.3	0.0605	0.0794	1.0980	1.4408	0.0123	0.0161	17.3
8	1	1	31.	180.	2104.9	2160.2	64.8	23.2	0.0	6.2	0.0418	0.0029	1.0804	0.0000	0.0051	0.0013	15.1
8	1	2	31.	180.	2104.9	2160.2	37.8	29.6	6.1	4.7	0.0320	0.0050	0.5807	0.0909	0.0065	0.0010	13.4
9	1	1	31.	125.	2104.9	2160.2	57.1	18.8	0.0	6.2	0.0360	0.0029	0.9197	0.0000	0.0041	0.0013	14.6
9	1	2	31.	125.	2104.9	2160.2	29.6	23.1	6.1	4.7	0.0250	0.0050	0.4539	0.0909	0.0051	0.0010	12.6
10	1	1	31.	70.	2104.9	2160.2	58.4	18.7	0.0	6.2	0.0366	0.0029	0.9348	0.0000	0.0041	0.0013	14.6
10	1	2	31.	70.	2104.9	2160.2	29.5	23.0	6.1	4.7	0.0249	0.0050	0.4523	0.0909	0.0051	0.0010	12.6
11	1	1	51.	290.	2565.4	4622.3	137.1	40.5	0.0	68.5	0.0692	0.0148	1.6859	0.0000	0.0073	0.0069	16.7
11	1	2	51.	290.	2565.4	4622.3	68.8	53.8	115.8	90.5	0.0478	0.0446	0.8670	0.8094	0.0097	0.0091	17.6
12	1	1	51.	235.	2565.4	4622.3	122.6	37.9	0.0	59.8	0.0626	0.0129	1.5491	0.0000	0.0068	0.0060	16.5
12	1	2	51.	235.	2565.4	4622.3	64.1	50.1	99.5	77.7	0.0445	0.0383	0.8074	0.6955	0.0090	0.0078	17.3
13	1	1	51.	180.	2565.4	4622.3	70.0	25.7	0.0	13.3	0.0373	0.0029	0.9328	0.0000	0.0046	0.0013	15.3
13	1	2	51.	180.	2565.4	4622.3	41.3	32.3	13.0	10.2	0.0287	0.0050	0.5199	0.0909	0.0058	0.0010	14.2
14	1	1	51.	125.	2565.4	4622.3	58.7	21.1	0.0	13.3	0.0311	0.0029	0.7766	0.0000	0.0038	0.0013	14.7
14	1	2	51.	125.	2565.4	4622.3	32.8	25.6	13.0	10.2	0.0228	0.0050	0.4129	0.0909	0.0046	0.0010	13.6
15	1	1	51.	70.	2565.4	4622.3	58.7	20.9	0.0	13.3	0.0310	0.0029	0.7742	0.0000	0.0038	0.0013	14.7
15	1	2	51.	70.	2565.4	4622.3	32.3	25.2	13.0	10.2	0.0224	0.0050	0.4067	0.0909	0.0046	0.0010	13.6
16	1	1	72.	290.	3143.7	6245.4	102.9	36.3	0.0	40.8	0.0443	0.0065	1.0622	0.0000	0.0053	0.0030	16.1
16	1	2	72.	290.	3143.7	6245.4	59.6	46.6	59.9	46.8	0.0338	0.0171	0.6124	0.3102	0.0069	0.0035	16.4
17	1	1	72.	235.	3143.7	6245.4	98.9	35.3	0.0	36.2	0.0427	0.0058	1.0269	0.0000	0.0052	0.0027	16.0
17	1	2	72.	235.	3143.7	6245.4	57.7	45.1	51.3	40.1	0.0327	0.0146	0.5927	0.2657	0.0066	0.0030	16.2
18	1	1	72.	180.	3143.7	6245.4	79.3	29.7	0.0	18.0	0.0347	0.0029	0.8429	0.0000	0.0044	0.0013	15.7
18	1	2	72.	180.	3143.7	6245.4	47.2	36.9	17.6	13.7	0.0267	0.0050	0.4851	0.0909	0.0054	0.0010	14.8
19	1	1	72.	125.	3143.7	6245.4	69.4	26.3	0.0	18.0	0.0304	0.0029	0.7426	0.0000	0.0039	0.0013	15.2
19	1	2	72.	125.	3143.7	6245.4	40.8	31.9	17.6	13.7	0.0231	0.0050	0.4199	0.0909	0.0047	0.0010	14.5
20	1	1	72.	70.	3143.7	6245.4	68.6	25.9	0.0	18.0	0.0300	0.0029	0.7334	0.0000	0.0038	0.0013	15.2
20	1	2	72.	70.	3143.7	6245.4	40.2	31.4	17.6	13.7	0.0228	0.0050	0.4131	0.0909	0.0046	0.0010	14.4

NOTE -- ABOVE VALUES ASSUME VISIBLE TRANSMITTANCE = 1.0 FOR WINDOW GLASS AND SHADING DEVICE.
ACTUAL TRANSMITTANCES ARE USED IN THE HOURLY CALCULATION.

*** BUILDING ***

FLOOR AREA	36400	SQFT	3382	SQMT
VOLUME	364000	CUFT	10308	CUMT

	COOLING LOAD		HEATING LOAD	
TIME	JUL 17 5PM		FEB 22 1PM	
DRY-BULB TEMP	90F	32C	31F	-1C
WET-BULB TEMP	71F	22C	29F	-2C

	COOLING SENSIBLE (KBTU/H)	COOLING SENSIBLE (KW)	COOLING LATENT (KBTU/H)	COOLING LATENT (KW)	HEATING SENSIBLE (KBTU/H)	HEATING SENSIBLE (KW)
WALL CONDUCTION	7.739	2.267	0.000	0.000	-15.713	-4.604
ROOF CONDUCTION	0.000	0.000	0.000	0.000	0.000	0.000
WINDOW GLASS+FRM COND	8.479	2.484	0.000	0.000	-35.593	-10.429
WINDOW GLASS SOLAR	65.900	19.309	0.000	0.000	17.016	4.986
DOOR CONDUCTION	0.000	0.000	0.000	0.000	0.000	0.000
INTERNAL SURFACE COND	0.000	0.000	0.000	0.000	0.000	0.000
UNDERGROUND SURF COND	0.000	0.000	0.000	0.000	0.000	0.000
OCCUPANTS TO SPACE	83.021	24.325	61.289	17.958	0.365	0.107
LIGHT TO SPACE	133.559	39.133	0.000	0.000	9.628	2.821
EQUIPMENT TO SPACE	0.000	0.000	0.000	0.000	0.000	0.000
PROCESS TO SPACE	0.000	0.000	0.000	0.000	0.000	0.000
INFILTRATION	6.560	1.922	6.118	1.792	-314.172	-92.052
TOTAL	305.258	89.441	67.406	19.750	-338.469	-99.171

TOTAL LOAD	372.664 KBTU/H	109.191 KW	-338.469 KBTU/H	-99.171 KW
TOTAL LOAD / AREA	10.24BTU/H.SQFT	32.289 W /SQMT	9.299BTU/H.SQFT	29.326 W /SQMT

NOTE 1)THE ABOVE LOADS EXCLUDE OUTSIDE VENTILATION AIR LOADS
2)TIMES GIVEN IN STANDARD TIME FOR THE LOCATION IN CONSIDERATION

SPACE NORTHZONE

	PERCENT LIGHTING ENERGY REDUCTION BY DAYLIGHTING (ALL HOURS)			PERCENT LIGHTING ENERGY REDUCTION BY DAYLIGHTING (REPORT SCHEDULE HOURS)			REPORT SCHEDULE HOURS WITH SUN UP: AVERAGE DAYLIGHT ILLUMINANCE (FOOTCANDLES)		PERCENT HOURS DAYLIGHT ILLUMINANCE ABOVE SETPOINT		AVERAGE GLARE INDEX		PERCENT HOURS GLARE TOO HIGH	
MONTH	TOTAL ZONE	REF PT 1	REF PT 2	TOTAL ZONE	REF PT 1	REF PT 2	REF PT 1	REF PT 2	REF PT 1	REF PT 2	REF PT 1	REF PT 2	REF PT 1	REF PT 2
JAN	10.1	20.2	0.0	13.1	26.1	0.0	19.8	0.0	1.1	0.0	7.2	0.0	0.0	0.0
FEB	16.7	33.4	0.0	21.6	43.1	0.0	28.0	0.0	6.0	0.0	8.8	0.0	0.0	0.0
MAR	25.4	50.7	0.0	32.3	64.7	0.0	45.4	0.0	35.1	0.0	11.1	0.0	0.0	0.0
APR	30.2	60.4	0.0	37.6	75.2	0.0	61.1	0.0	49.3	0.0	12.0	0.0	0.0	0.0
MAY	37.8	75.6	0.0	46.1	92.2	0.0	82.9	0.0	75.3	0.0	13.7	0.0	0.0	0.0
JUN	40.0	80.0	0.0	47.4	94.8	0.0	79.8	0.0	72.6	0.0	13.6	0.0	0.0	0.0
JUL	39.3	78.7	0.0	46.0	92.0	0.0	70.9	0.0	66.7	0.0	12.8	0.0	0.0	0.0
AUG	36.5	73.0	0.0	44.2	88.4	0.0	75.1	0.0	68.1	0.0	13.3	0.0	0.0	0.0
SEP	25.9	51.9	0.0	32.3	64.7	0.0	49.0	0.0	33.7	0.0	11.1	0.0	0.0	0.0
OCT	16.6	33.1	0.0	21.2	42.4	0.0	29.3	0.0	9.3	0.0	8.7	0.0	0.0	0.0
NOV	10.9	21.8	0.0	14.1	28.2	0.0	21.6	0.0	1.9	0.0	7.5	0.0	0.0	0.0
DEC	8.7	17.5	0.0	11.3	22.6	0.0	18.5	0.0	0.7	0.0	6.8	0.0	0.0	0.0
ANNUAL	25.0	50.0	0.0	30.8	61.6	0.0	48.6	0.0	35.2	0.0	10.6	0.0	0.0	0.0

SPACE SOUTHZONE

	PERCENT LIGHTING ENERGY REDUCTION BY DAYLIGHTING (ALL HOURS)			PERCENT LIGHTING ENERGY REDUCTION BY DAYLIGHTING (REPORT SCHEDULE HOURS)			REPORT SCHEDULE HOURS WITH SUN UP: AVERAGE DAYLIGHT ILLUMINANCE (FOOTCANDLES)		REPORT SCHEDULE HOURS WITH SUN UP: PERCENT HOURS DAYLIGHT ILLUMINANCE ABOVE SETPOINT		REPORT SCHEDULE HOURS WITH SUN UP: AVERAGE GLARE INDEX		REPORT SCHEDULE HOURS WITH SUN UP: PERCENT HOURS GLARE TOO HIGH	
MONTH	TOTAL ZONE	REF PT 1	REF PT 2	TOTAL ZONE	REF PT 1	REF PT 2	REF PT 1	REF PT 2	REF PT 1	REF PT 2	REF PT 1	REF PT 2	REF PT 1	REF PT 2
JAN	15.9	31.7	0.0	20.5	41.1	0.0	33.6	0.0	22.2	0.0	8.6	0.0	0.0	0.0
FEB	21.6	43.1	0.0	27.7	55.4	0.0	40.6	0.0	26.2	0.0	10.3	0.0	0.0	0.0
MAR	24.7	49.4	0.0	31.1	62.2	0.0	48.2	0.0	38.4	0.0	11.5	0.0	0.0	0.0
APR	27.4	54.7	0.0	33.4	66.7	0.0	67.4	0.0	65.2	0.0	12.7	0.0	0.0	0.0
MAY	29.0	58.1	0.0	34.4	68.9	0.0	87.0	0.0	77.8	0.0	13.8	0.0	0.0	0.0
JUN	29.9	59.7	0.0	34.7	69.5	0.0	84.4	0.0	70.0	0.0	13.5	0.0	0.0	0.0
JUL	29.7	59.3	0.0	34.3	68.6	0.0	72.5	0.0	60.2	0.0	12.6	0.0	0.0	0.0
AUG	29.2	58.5	0.0	34.6	69.1	0.0	81.2	0.0	84.2	0.0	13.6	0.0	0.0	0.0
SEP	27.7	55.4	0.0	33.7	67.3	0.0	59.4	0.0	62.2	0.0	12.2	0.0	0.0	0.0
OCT	24.0	48.1	0.0	30.4	60.9	0.0	47.8	0.0	38.7	0.0	11.1	0.0	0.0	0.0
NOV	17.2	34.4	0.0	22.1	44.2	0.0	37.9	0.0	28.9	0.0	9.0	0.0	0.0	0.0
DEC	14.1	28.2	0.0	18.2	36.4	0.0	26.3	0.0	14.0	0.0	7.5	0.0	0.0	0.0
ANNUAL	24.3	48.5	0.0	29.7	59.4	0.0	57.3	0.0	49.1	0.0	11.4	0.0	0.0	0.0

SPACE EASTZONE

	PERCENT LIGHTING ENERGY REDUCTION BY DAYLIGHTING (ALL HOURS)			PERCENT LIGHTING ENERGY REDUCTION BY DAYLIGHTING (REPORT SCHEDULE HOURS)			REPORT SCHEDULE HOURS WITH SUN UP: AVERAGE DAYLIGHT ILLUMINANCE (FOOTCANDLES)		PERCENT HOURS DAYLIGHT ILLUMINANCE ABOVE SETPOINT		AVERAGE GLARE INDEX		PERCENT HOURS GLARE TOO HIGH	
MONTH	TOTAL ZONE	REF PT 1	REF PT 2	TOTAL ZONE	REF PT 1	REF PT 2	REF PT 1	REF PT 2	REF PT 1	REF PT 2	REF PT 1	REF PT 2	REF PT 1	REF PT 2
JAN	14.8	29.5	0.0	19.1	38.2	0.0	24.9	0.0	7.9	0.0	8.0	0.0	0.0	0.0
FEB	20.2	40.4	0.0	26.0	52.0	0.0	32.8	0.0	11.1	0.0	9.6	0.0	0.0	0.0
MAR	23.9	47.9	0.0	30.1	60.3	0.0	49.2	0.0	39.8	0.0	11.4	0.0	0.0	0.0
APR	26.7	53.4	0.0	32.5	64.9	0.0	65.6	0.0	56.3	0.0	12.4	0.0	0.0	0.0
MAY	29.0	57.9	0.0	34.4	68.7	0.0	84.6	0.0	78.5	0.0	13.9	0.0	0.0	0.0
JUN	29.9	59.7	0.0	34.6	69.2	0.0	83.1	0.0	75.2	0.0	13.6	0.0	0.0	0.0
JUL	29.5	59.0	0.0	34.1	68.2	0.0	74.4	0.0	74.9	0.0	13.0	0.0	0.0	0.0
AUG	28.7	57.5	0.0	34.1	68.2	0.0	79.8	0.0	76.0	0.0	13.5	0.0	0.0	0.0
SEP	26.0	52.1	0.0	31.9	63.7	0.0	59.6	0.0	53.0	0.0	12.0	0.0	0.0	0.0
OCT	21.2	42.3	0.0	26.8	53.5	0.0	38.8	0.0	24.0	0.0	10.0	0.0	0.0	0.0
NOV	16.2	32.4	0.0	20.7	41.3	0.0	28.1	0.0	11.5	0.0	8.4	0.0	0.0	0.0
DEC	13.5	27.0	0.0	17.4	34.7	0.0	22.3	0.0	5.7	0.0	7.4	0.0	0.0	0.0
ANNUAL	23.4	46.7	0.0	28.5	57.1	0.0	53.7	0.0	43.0	0.0	11.1	0.0	0.0	0.0

SPACE WESTZONE

	PERCENT LIGHTING ENERGY REDUCTION BY DAYLIGHTING (ALL HOURS)			PERCENT LIGHTING ENERGY REDUCTION BY DAYLIGHTING (REPORT SCHEDULE HOURS)			REPORT SCHEDULE HOURS WITH SUN UP: AVERAGE DAYLIGHT ILLUMINANCE (FOOTCANDLES)		PERCENT HOURS DAYLIGHT ILLUMINANCE ABOVE SETPOINT		AVERAGE GLARE INDEX		PERCENT HOURS GLARE TOO HIGH	
MONTH	TOTAL ZONE	REF PT 1	REF PT 2	TOTAL ZONE	REF PT 1	REF PT 2	REF PT 1	REF PT 2	REF PT 1	REF PT 2	REF PT 1	REF PT 2	REF PT 1	REF PT 2
JAN	15.0	29.9	0.0	19.4	38.7	0.0	25.5	0.0	6.5	0.0	7.6	0.0	0.0	0.0
FEB	19.5	38.9	0.0	25.0	50.1	0.0	32.5	0.0	12.3	0.0	9.3	0.0	0.0	0.0
MAR	23.9	47.9	0.0	30.2	60.4	0.0	48.9	0.0	35.5	0.0	11.4	0.0	0.0	0.0
APR	26.7	53.4	0.0	32.7	65.4	0.0	66.6	0.0	61.5	0.0	12.5	0.0	0.0	0.0
MAY	28.6	57.3	0.0	33.8	67.6	0.0	81.9	0.0	74.6	0.0	13.6	0.0	0.0	0.0
JUN	30.1	60.1	0.0	34.5	68.9	0.0	79.0	0.0	70.0	0.0	13.4	0.0	0.0	0.0
JUL	29.7	59.4	0.0	34.0	68.0	0.0	69.5	0.0	64.2	0.0	12.8	0.0	0.0	0.0
AUG	28.8	57.6	0.0	33.8	67.6	0.0	77.4	0.0	69.2	0.0	13.3	0.0	0.0	0.0
SEP	25.6	51.3	0.0	31.0	62.0	0.0	57.5	0.0	49.6	0.0	11.8	0.0	0.0	0.0
OCT	20.5	41.1	0.0	26.0	51.9	0.0	36.7	0.0	21.5	0.0	9.7	0.0	0.0	0.0
NOV	15.3	30.6	0.0	19.7	39.4	0.0	26.7	0.0	9.6	0.0	8.0	0.0	0.0	0.0
DEC	13.0	26.1	0.0	16.9	33.7	0.0	23.9	0.0	6.5	0.0	7.1	0.0	0.0	0.0
ANNUAL	23.2	46.3	0.0	28.2	56.3	0.0	52.3	0.0	40.2	0.0	10.9	0.0	0.0	0.0

SPACE NORTHZONE

HOUR OF DAY

MONTH	1	2	3	4	5	6	7	8	9	10	11	12	13	14	15	16	17	18	19	20	21	22	23	24	ALL HOURS
JAN	0	0	0	0	0	0	0	1	5	11	17	23	24	19	13	6	1	0	0	0	0	0	0	0	10
FEB	0	0	0	0	0	0	0	4	10	18	28	32	34	32	24	13	5	0	0	0	0	0	0	0	17
MAR	0	0	0	0	0	0	2	11	22	34	39	44	43	42	37	23	10	2	0	0	0	0	0	0	25
APR	0	0	0	0	0	2	10	25	32	39	41	43	45	44	40	34	20	7	0	0	0	0	0	0	30
MAY	0	0	0	0	0	7	25	35	44	47	49	50	50	50	50	40	28	13	2	0	0	0	0	0	38
JUN	0	0	0	0	1	10	29	43	48	49	47	49	49	49	49	45	36	27	6	0	0	0	0	0	40
JUL	0	0	0	0	0	7	34	43	46	47	47	48	48	49	49	39	42	33	7	0	0	0	0	0	39
AUG	0	0	0	0	0	3	19	36	42	45	47	47	48	48	45	41	33	16	2	0	0	0	0	0	37
SEP	0	0	0	0	0	0	8	21	23	32	41	44	40	37	31	24	14	3	0	0	0	0	0	0	26
OCT	0	0	0	0	0	0	2	10	15	25	28	29	28	28	20	10	3	0	0	0	0	0	0	0	17
NOV	0	0	0	0	0	0	0	4	9	15	22	25	23	18	11	4	0	0	0	0	0	0	0	0	11
DEC	0	0	0	0	0	0	0	1	5	10	17	19	23	16	9	3	0	0	0	0	0	0	0	0	9
ANNUAL	0	0	0	0	0	3	15	26	25	31	35	37	39	36	32	24	13	7	1	0	0	0	0	0	25

NOTE- THE ENTRIES IN THIS REPORT ARE NOT
SUBJECT TO THE DAYLIGHTING REPORT SCHEDULE

SPACE SOUTHZONE

HOUR OF DAY

MONTH	1	2	3	4	5	6	7	8	9	10	11	12	13	14	15	16	17	18	19	20	21	22	23	24	ALL HOURS
JAN	0	0	0	0	0	0	0	1	11	21	28	30	31	28	24	13	1	0	0	0	0	0	0	0	16
FEB	0	0	0	0	0	0	0	8	22	30	33	34	34	33	30	24	10	0	0	0	0	0	0	0	22
MAR	0	0	0	0	0	0	4	19	28	33	34	35	35	34	33	30	19	3	0	0	0	0	0	0	25
APR	0	0	0	0	0	2	17	30	33	34	35	35	35	35	34	33	26	11	0	0	0	0	0	0	27
MAY	0	0	0	0	0	9	26	32	34	35	35	35	35	35	35	34	29	17	3	0	0	0	0	0	29
JUN	0	0	0	0	1	13	26	35	35	34	35	35	35	35	35	34	31	23	8	0	0	0	0	0	30
JUL	0	0	0	0	0	10	28	33	35	34	35	35	35	35	35	32	33	27	9	0	0	0	0	0	30
AUG	0	0	0	0	0	3	23	33	34	35	35	35	35	35	35	34	32	20	2	0	0	0	0	0	29
SEP	0	0	0	0	0	0	16	31	32	35	35	35	35	35	34	32	26	5	0	0	0	0	0	0	28
OCT	0	0	0	0	0	0	5	23	31	33	34	35	35	33	30	25	7	0	0	0	0	0	0	0	24
NOV	0	0	0	0	0	0	0	8	23	28	30	32	31	27	20	10	0	0	0	0	0	0	0	0	17
DEC	0	0	0	0	0	0	0	2	13	21	26	28	28	25	18	6	0	0	0	0	0	0	0	0	14
ANNUAL	0	0	0	0	0	4	16	27	28	31	33	33	34	33	30	26	15	7	2	0	0	0	0	0	24

NOTE- THE ENTRIES IN THIS REPORT ARE NOT
SUBJECT TO THE DAYLIGHTING REPORT SCHEDULE

SPACE EASTZONE

HOUR OF DAY

MONTH	1	2	3	4	5	6	7	8	9	10	11	12	13	14	15	16	17	18	19	20	21	22	23	24	ALL HOURS
JAN	0	0	0	0	0	0	0	2	11	22	27	30	27	25	19	11	1	0	0	0	0	0	0	0	15
FEB	0	0	0	0	0	0	0	6	23	30	33	33	31	31	27	19	8	0	0	0	0	0	0	0	20
MAR	0	0	0	0	0	0	4	19	30	33	33	34	33	32	33	27	15	3	0	0	0	0	0	0	24
APR	0	0	0	0	0	4	19	31	35	35	35	35	35	34	30	31	22	10	0	0	0	0	0	0	27
MAY	0	0	0	0	0	14	27	33	35	35	35	35	35	35	35	32	27	15	3	0	0	0	0	0	29
JUN	0	0	0	0	2	22	31	34	35	35	35	35	35	35	35	33	28	22	9	0	0	0	0	0	30
JUL	0	0	0	0	1	18	30	34	35	35	35	35	35	35	35	28	30	24	9	0	0	0	0	0	29
AUG	0	0	0	0	0	11	25	32	35	35	35	35	35	35	33	32	28	16	2	0	0	0	0	0	29
SEP	0	0	0	0	0	1	21	30	34	35	34	35	33	31	30	25	17	4	0	0	0	0	0	0	26
OCT	0	0	0	0	0	0	8	27	31	34	31	29	27	28	25	16	4	0	0	0	0	0	0	0	21
NOV	0	0	0	0	0	0	0	13	23	28	29	30	28	24	18	8	0	0	0	0	0	0	0	0	16
DEC	0	0	0	0	0	0	0	2	14	21	26	27	27	23	15	6	0	0	0	0	0	0	0	0	13
ANNUAL	0	0	0	0	0	7	18	27	28	32	32	33	32	31	28	22	13	7	2	0	0	0	0	0	23

NOTE- THE ENTRIES IN THIS REPORT ARE NOT
SUBJECT TO THE DAYLIGHTING REPORT SCHEDULE

DAYLIGHTING EXAMPLE FLOOR OF OFFICE BUILDING IN CHICAGO DOE-2.1E-001 Fri Nov 5 21:58:52 1993LDL RUN 1
30-FT DEEP PERIM OFFS DAYLIT TO 15 FT AUTO SHADE MANAGEMENT FOR SUN CONTROL
REPORT- LS-H PERCENT LIGHTING ENERGY REDUCTION BY DAYLIGHT WESTZONE WEATHER FILE- TRY CHICAGO

SPACE WESTZONE

HOUR OF DAY

MONTH	1	2	3	4	5	6	7	8	9	10	11	12	13	14	15	16	17	18	19	20	21	22	23	24	ALL HOURS
JAN	0	0	0	0	0	0	0	1	9	18	23	28	31	28	24	14	1	0	0	0	0	0	0	0	15
FEB	0	0	0	0	0	0	0	6	16	22	29	30	33	33	30	23	11	0	0	0	0	0	0	0	19
MAR	0	0	0	0	0	0	3	15	26	32	31	33	34	33	33	30	20	4	0	0	0	0	0	0	24
APR	0	0	0	0	0	2	14	25	28	32	33	34	35	35	35	34	27	12	1	0	0	0	0	0	27
MAY	0	0	0	0	0	9	21	29	32	35	35	35	35	35	35	34	29	21	6	0	0	0	0	0	29
JUN	0	0	0	0	1	13	23	32	34	35	35	35	35	35	35	35	32	28	19	0	0	0	0	0	30
JUL	0	0	0	0	0	10	23	30	32	35	35	35	35	35	35	34	33	29	20	0	0	0	0	0	30
AUG	0	0	0	0	0	3	18	29	32	34	35	35	35	35	35	34	31	26	8	0	0	0	0	0	29
SEP	0	0	0	0	0	0	10	21	24	30	33	35	33	35	35	33	27	9	0	0	0	0	0	0	26
OCT	0	0	0	0	0	0	3	14	21	27	26	28	31	34	31	26	8	0	0	0	0	0	0	0	21
NOV	0	0	0	0	0	0	0	6	15	22	27	29	30	27	20	10	1	0	0	0	0	0	0	0	15
DEC	0	0	0	0	0	0	0	1	9	17	23	25	29	24	19	8	0	0	0	0	0	0	0	0	13
ANNUAL	0	0	0	0	0	4	13	22	24	28	30	32	33	32	31	26	16	9	5	0	0	0	0	0	23

NOTE- THE ENTRIES IN THIS REPORT ARE NOT
SUBJECT TO THE DAYLIGHTING REPORT SCHEDULE

DAYLIGHTING EXAMPLE FLOOR OF OFFICE BUILDING IN CHICAGO DOE-2.1E-001 Fri Nov 5 21:58:52 1993LDL RUN 1
30-FT DEEP PERIM OFFS DAYLIT TO 15 FT AUTO SHADE MANAGEMENT FOR SUN CONTROL
REPORT- LS-I PERCENT LIGHTING ENERGY REDUCTION BY DAYLIGHT WEATHER FILE- TRY CHICAGO

*** BUILDING ***

HOUR OF DAY

MONTH	1	2	3	4	5	6	7	8	9	10	11	12	13	14	15	16	17	18	19	20	21	22	23	24	ALL HOURS
JAN	0	0	0	0	0	0	0	0	4	8	11	13	13	12	9	5	1	0	0	0	0	0	0	0	6
FEB	0	0	0	0	0	0	0	3	8	12	14	15	15	15	13	9	4	0	0	0	0	0	0	0	9
MAR	0	0	0	0	0	0	2	7	12	15	16	17	17	16	16	13	7	1	0	0	0	0	0	0	11
APR	0	0	0	0	0	1	7	13	15	16	17	17	17	17	16	15	11	5	0	0	0	0	0	0	13
MAY	0	0	0	0	0	5	12	15	17	18	18	18	18	18	18	16	13	8	2	0	0	0	0	0	14
JUN	0	0	0	0	0	7	13	17	17	18	17	18	18	18	18	17	15	12	5	0	0	0	0	0	15
JUL	0	0	0	0	0	5	13	16	17	17	18	18	18	18	18	15	16	13	5	0	0	0	0	0	15
AUG	0	0	0	0	0	2	10	15	17	17	18	18	18	18	17	16	14	9	2	0	0	0	0	0	14
SEP	0	0	0	0	0	0	6	12	13	15	16	17	16	16	15	13	10	2	0	0	0	0	0	0	12
OCT	0	0	0	0	0	0	2	8	11	14	14	14	14	14	12	9	3	0	0	0	0	0	0	0	9
NOV	0	0	0	0	0	0	0	4	8	11	12	13	13	11	8	4	0	0	0	0	0	0	0	0	7
DEC	0	0	0	0	0	0	0	1	5	8	11	11	12	10	7	3	0	0	0	0	0	0	0	0	6
ANNUAL	0	0	0	0	0	2	7	12	12	14	15	16	16	15	14	11	6	3	1	0	0	0	0	0	11

NOTE- THE ENTRIES IN THIS REPORT ARE NOT
SUBJECT TO THE DAYLIGHTING REPORT SCHEDULE

SPACE NORTHZONE

		PERCENT OF HOURS IN ILLUMINANCE RANGE									PERCENT OF HOURS ILLUMINANCE LEVEL EXCEEDED								
		ILLUMINANCE RANGE (FOOTCANDLES)									ILLUMINANCE LEVEL (FOOTCANDLES)								
MONTH	REF PT	0 -- 10	10 -- 20	20 -- 30	30 -- 40	40 -- 50	50 -- 60	60 -- 70	70 -- 80	80 -ABOVE	0	10	20	30	40	50	60	70	80
JAN	-1-	22	25	32	17	2	1	0	0	0	100	78	52	20	3	1	0	0	0
	-2-	0	0	0	0	0	0	0	0	0	0	0	0	0	0	0	0	0	0
FEB	-1-	11	19	29	17	17	3	3	0	0	100	89	69	40	23	6	3	0	0
	-2-	0	0	0	0	0	0	0	0	0	0	0	0	0	0	0	0	0	0
MAR	-1-	2	11	18	20	15	13	6	4	11	100	98	87	70	50	35	22	15	11
	-2-	0	0	0	0	0	0	0	0	0	0	0	0	0	0	0	0	0	0
APR	-1-	1	3	7	29	11	11	1	3	34	100	99	96	89	60	49	38	37	34
	-2-	0	0	0	0	0	0	0	0	0	0	0	0	0	0	0	0	0	0
MAY	-1-	0	1	2	7	14	9	5	5	57	100	100	99	97	90	75	67	62	57
	-2-	0	0	0	0	0	0	0	0	0	0	0	0	0	0	0	0	0	0
JUN	-1-	0	0	0	6	21	14	10	0	48	100	100	100	100	94	73	58	48	48
	-2-	0	0	0	0	0	0	0	0	0	0	0	0	0	0	0	0	0	0
JUL	-1-	0	3	1	5	25	15	12	5	35	100	100	97	97	92	67	51	39	35
	-2-	0	0	0	0	0	0	0	0	0	0	0	0	0	0	0	0	0	0
AUG	-1-	0	1	2	14	15	13	5	3	47	100	100	99	97	83	68	55	50	47
	-2-	0	0	0	0	0	0	0	0	0	0	0	0	0	0	0	0	0	0
SEP	-1-	2	4	12	37	11	9	3	2	20	100	98	94	82	44	34	25	22	20
	-2-	0	0	0	0	0	0	0	0	0	0	0	0	0	0	0	0	0	0
OCT	-1-	11	16	32	16	17	7	2	0	0	100	89	73	42	26	9	2	0	0
	-2-	0	0	0	0	0	0	0	0	0	0	0	0	0	0	0	0	0	0
NOV	-1-	21	22	33	19	4	1	0	0	0	100	79	57	25	6	2	0	0	0
	-2-	0	0	0	0	0	0	0	0	0	0	0	0	0	0	0	0	0	0
DEC	-1-	27	25	29	16	3	1	0	0	0	100	73	48	19	3	1	0	0	0
	-2-	0	0	0	0	0	0	0	0	0	0	0	0	0	0	0	0	0	0
ANNUAL	-1-	8	11	16	17	13	8	4	2	21	100	92	81	65	48	35	27	23	21
	-2-	0	0	0	0	0	0	0	0	0	0	0	0	0	0	0	0	0	0

NOTE- THE HOURS CONSIDERED IN THIS REPORT ARE THOSE
WITH SUN UP AND DAYLIGHTING REPORT SCHEDULE ON

SPACE SOUTHZONE

		PERCENT OF HOURS IN ILLUMINANCE RANGE									PERCENT OF HOURS ILLUMINANCE LEVEL EXCEEDED								
		ILLUMINANCE RANGE (FOOTCANDLES)									ILLUMINANCE LEVEL (FOOTCANDLES)								
MONTH	REF PT	0 -- 10	-- 20	-- 30	-- 40	-- 50	-- 60	-- 70	-- 80	-ABOVE	0	10	20	30	40	50	60	70	80
JAN	-1-	20	15	25	16	3	3	7	3	10	100	80	66	41	25	22	19	13	10
	-2-	0	0	0	0	0	0	0	0	0	0	0	0	0	0	0	0	0	0
FEB	-1-	7	11	16	19	21	6	9	5	6	100	93	83	66	47	26	20	11	6
	-2-	0	0	0	0	0	0	0	0	0	0	0	0	0	0	0	0	0	0
MAR	-1-	0	6	11	26	18	13	9	5	11	100	100	93	82	56	38	25	16	11
	-2-	0	0	0	0	0	0	0	0	0	0	0	0	0	0	0	0	0	0
APR	-1-	0	1	9	12	14	18	12	5	30	100	100	99	91	79	65	47	35	30
	-2-	0	0	0	0	0	0	0	0	0	0	0	0	0	0	0	0	0	0
MAY	-1-	0	1	2	8	12	12	9	4	53	100	100	99	97	90	78	66	57	53
	-2-	0	0	0	0	0	0	0	0	0	0	0	0	0	0	0	0	0	0
JUN	-1-	0	0	0	13	17	11	10	6	43	100	100	100	100	87	70	59	49	43
	-2-	0	0	0	0	0	0	0	0	0	0	0	0	0	0	0	0	0	0
JUL	-1-	0	0	2	11	26	17	10	4	29	100	100	100	97	86	60	43	33	29
	-2-	0	0	0	0	0	0	0	0	0	0	0	0	0	0	0	0	0	0
AUG	-1-	0	0	1	7	8	20	17	6	40	100	100	100	99	92	84	64	47	40
	-2-	0	0	0	0	0	0	0	0	0	0	0	0	0	0	0	0	0	0
SEP	-1-	0	1	7	13	17	16	20	13	14	100	100	99	92	80	62	46	26	14
	-2-	0	0	0	0	0	0	0	0	0	0	0	0	0	0	0	0	0	0
OCT	-1-	3	7	10	21	20	9	13	9	9	100	97	91	80	59	39	30	18	9
	-2-	0	0	0	0	0	0	0	0	0	0	0	0	0	0	0	0	0	0
NOV	-1-	19	11	21	16	5	4	7	4	14	100	81	70	50	34	29	24	18	14
	-2-	0	0	0	0	0	0	0	0	0	0	0	0	0	0	0	0	0	0
DEC	-1-	24	21	24	15	2	4	3	2	5	100	76	56	31	16	14	10	7	5
	-2-	0	0	0	0	0	0	0	0	0	0	0	0	0	0	0	0	0	0
ANNUAL	-1-	6	6	11	15	13	11	10	5	22	100	94	88	77	63	49	38	28	22
	-2-	0	0	0	0	0	0	0	0	0	0	0	0	0	0	0	0	0	0

NOTE- THE HOURS CONSIDERED IN THIS REPORT ARE THOSE
WITH SUN UP AND DAYLIGHTING REPORT SCHEDULE ON

SPACE EASTZONE

PERCENT OF HOURS IN ILLUMINANCE RANGE — ILLUMINANCE RANGE (FOOTCANDLES)

MONTH	REF PT	0 -- 10	10 -- 20	20 -- 30	30 -- 40	40 -- 50	50 -- 60	60 -- 70	70 -- 80	80 -ABOVE
JAN	-1-	20	19	29	18	6	4	1	1	2
	-2-	0	0	0	0	0	0	0	0	0
FEB	-1-	8	17	21	21	22	4	5	0	2
	-2-	0	0	0	0	0	0	0	0	0
MAR	-1-	1	10	11	22	16	13	7	5	15
	-2-	0	0	0	0	0	0	0	0	0
APR	-1-	3	1	8	14	18	11	2	9	34
	-2-	0	0	0	0	0	0	0	0	0
MAY	-1-	0	0	3	9	10	10	6	7	55
	-2-	0	0	0	0	0	0	0	0	0
JUN	-1-	0	0	0	10	14	13	7	4	51
	-2-	0	0	0	0	0	0	0	0	0
JUL	-1-	2	0	1	6	16	16	13	8	38
	-2-	0	0	0	0	0	0	0	0	0
AUG	-1-	0	0	3	9	12	13	7	8	48
	-2-	0	0	0	0	0	0	0	0	0
SEP	-1-	1	3	11	18	14	10	6	7	29
	-2-	0	0	0	0	0	0	0	0	0
OCT	-1-	6	13	19	20	18	8	7	3	6
	-2-	0	0	0	0	0	0	0	0	0
NOV	-1-	20	14	28	20	6	3	3	2	3
	-2-	0	0	0	0	0	0	0	0	0
DEC	-1-	26	20	27	19	2	3	0	1	2
	-2-	0	0	0	0	0	0	0	0	0
ANNUAL	-1-	7	8	13	15	13	9	5	5	24
	-2-	0	0	0	0	0	0	0	0	0

PERCENT OF HOURS ILLUMINANCE LEVEL EXCEEDED — ILLUMINANCE LEVEL (FOOTCANDLES)

MONTH	REF PT	0	10	20	30	40	50	60	70	80
JAN	-1-	100	80	60	32	14	8	4	3	2
	-2-	0	0	0	0	0	0	0	0	0
FEB	-1-	100	92	75	54	33	11	7	2	2
	-2-	0	0	0	0	0	0	0	0	0
MAR	-1-	100	99	88	77	56	40	27	20	15
	-2-	0	0	0	0	0	0	0	0	0
APR	-1-	100	97	97	89	74	56	46	43	34
	-2-	0	0	0	0	0	0	0	0	0
MAY	-1-	100	100	100	97	89	78	68	62	55
	-2-	0	0	0	0	0	0	0	0	0
JUN	-1-	100	100	100	99	89	75	62	55	51
	-2-	0	0	0	0	0	0	0	0	0
JUL	-1-	100	98	98	97	91	75	59	46	38
	-2-	0	0	0	0	0	0	0	0	0
AUG	-1-	100	100	100	96	88	76	63	56	48
	-2-	0	0	0	0	0	0	0	0	0
SEP	-1-	100	99	96	85	67	53	43	36	29
	-2-	0	0	0	0	0	0	0	0	0
OCT	-1-	100	94	80	61	42	24	16	9	6
	-2-	0	0	0	0	0	0	0	0	0
NOV	-1-	100	80	66	38	18	11	8	5	3
	-2-	0	0	0	0	0	0	0	0	0
DEC	-1-	100	74	54	27	8	6	3	3	2
	-2-	0	0	0	0	0	0	0	0	0
ANNUAL	-1-	100	93	85	71	56	43	34	28	24
	-2-	0	0	0	0	0	0	0	0	0

NOTE- THE HOURS CONSIDERED IN THIS REPORT ARE THOSE
WITH SUN UP AND DAYLIGHTING REPORT SCHEDULE ON

SPACE WESTZONE

PERCENT OF HOURS IN ILLUMINANCE RANGE

ILLUMINANCE RANGE (FOOTCANDLES)

MONTH	REF PT	0 -- 10	10 -- 20	20 -- 30	30 -- 40	40 -- 50	50 -- 60	60 -- 70	70 -- 80	80 -ABOVE
JAN	-1-	21	19	29	18	6	1	1	1	3
	-2-	0	0	0	0	0	0	0	0	0
FEB	-1-	8	15	23	23	19	7	4	0	2
	-2-	0	0	0	0	0	0	0	0	0
MAR	-1-	1	8	15	24	17	11	4	5	16
	-2-	0	0	0	0	0	0	0	0	0
APR	-1-	1	1	9	19	9	19	3	6	34
	-2-	0	0	0	0	0	0	0	0	0
MAY	-1-	1	1	2	11	10	11	4	5	54
	-2-	0	0	0	0	0	0	0	0	0
JUN	-1-	0	0	2	10	18	15	10	1	44
	-2-	0	0	0	0	0	0	0	0	0
JUL	-1-	1	0	2	15	18	17	13	4	31
	-2-	0	0	0	0	0	0	0	0	0
AUG	-1-	0	1	3	17	10	14	4	5	46
	-2-	0	0	0	0	0	0	0	0	0
SEP	-1-	1	3	15	21	10	14	5	5	26
	-2-	0	0	0	0	0	0	0	0	0
OCT	-1-	8	11	23	19	17	9	5	3	4
	-2-	0	0	0	0	0	0	0	0	0
NOV	-1-	18	19	27	21	5	4	2	2	1
	-2-	0	0	0	0	0	0	0	0	0
DEC	-1-	24	24	28	15	3	1	1	1	4
	-2-	0	0	0	0	0	0	0	0	0
ANNUAL	-1-	7	9	15	18	12	10	5	3	22
	-2-	0	0	0	0	0	0	0	0	0

PERCENT OF HOURS ILLUMINANCE LEVEL EXCEEDED

ILLUMINANCE LEVEL (FOOTCANDLES)

MONTH	REF PT	0	10	20	30	40	50	60	70	80
JAN	-1-	100	79	60	30	13	6	5	4	3
	-2-	0	0	0	0	0	0	0	0	0
FEB	-1-	100	92	77	54	31	12	6	2	2
	-2-	0	0	0	0	0	0	0	0	0
MAR	-1-	100	99	91	76	52	35	25	20	16
	-2-	0	0	0	0	0	0	0	0	0
APR	-1-	100	99	99	90	71	61	43	40	34
	-2-	0	0	0	0	0	0	0	0	0
MAY	-1-	100	99	98	96	85	75	63	59	54
	-2-	0	0	0	0	0	0	0	0	0
JUN	-1-	100	100	100	98	88	70	55	45	44
	-2-	0	0	0	0	0	0	0	0	0
JUL	-1-	100	99	99	97	82	64	47	34	31
	-2-	0	0	0	0	0	0	0	0	0
AUG	-1-	100	100	99	96	80	69	55	51	46
	-2-	0	0	0	0	0	0	0	0	0
SEP	-1-	100	99	96	81	60	50	35	30	26
	-2-	0	0	0	0	0	0	0	0	0
OCT	-1-	100	92	81	58	38	22	12	7	4
	-2-	0	0	0	0	0	0	0	0	0
NOV	-1-	100	82	63	36	15	10	6	3	1
	-2-	0	0	0	0	0	0	0	0	0
DEC	-1-	100	76	52	25	9	6	6	5	4
	-2-	0	0	0	0	0	0	0	0	0
ANNUAL	-1-	100	93	85	70	52	40	30	25	22
	-2-	0	0	0	0	0	0	0	0	0

NOTE- THE HOURS CONSIDERED IN THIS REPORT ARE THOSE
WITH SUN UP AND DAYLIGHTING REPORT SCHEDULE ON

MMDDHH	GLOBAL DRY BULB TEMP F ----(4)	GLOBAL CLOUD AMOUNT ----(6)	GLOBAL DIR SOL X CLDCOV BTU/HR-SQFT ----(21)	GLOBAL DIF SOL X CLDCOV BTU/HR-SQFT ----(22)	GLOBAL GLOBAL SOLAR BTU/HR-SQFT ----(15)	GLOBAL ATM TURBIDTY ----(48)	GLOBAL ATM MOISTURE IN ----(49)	GLOBAL SOLAR ALTITUDE DEGREES ----(50)	GLOBAL SOLAR AZIMUTH DEGREES ----(51)	GLOBAL DAYLIGHT CLD FAC ----(52)	GLOBAL EXT ILL CLR SKY FOOTCANDLES ----(53)	GLOBAL EXT ILL OVR SKY FOOTCANDLES ----(54)
1 2 1	1.0	4.0	0.0	0.0	0.0	0.000	0.00	0.0	0.0	0.00	0.	0.
1 2 2	1.0	2.0	0.0	0.0	0.0	0.000	0.00	0.0	0.0	0.00	0.	0.
1 2 3	1.0	2.0	0.0	0.0	0.0	0.000	0.00	0.0	0.0	0.00	0.	0.
1 2 4	2.0	0.0	0.0	0.0	0.0	0.000	0.00	0.0	0.0	0.00	0.	0.
1 2 5	2.0	7.0	0.0	0.0	0.0	0.000	0.00	0.0	0.0	0.00	0.	0.
1 2 6	2.0	10.0	0.0	0.0	0.0	0.000	0.00	0.0	0.0	0.00	0.	0.
1 2 7	3.0	10.0	0.0	0.0	0.0	0.000	0.00	0.0	0.0	0.00	0.	0.
1 2 8	4.0	10.0	0.0	1.0	1.0	0.150	0.36	2.8	124.7	0.00	0.	33.
1 2 9	4.0	10.0	0.0	15.1	15.1	0.150	0.36	9.8	133.4	0.00	0.	485.
1 210	5.0	10.0	0.0	31.9	31.9	0.150	0.36	17.1	145.4	0.00	0.	1030.
1 211	6.0	10.0	0.0	44.3	44.3	0.150	0.36	22.3	159.0	0.00	0.	1426.
1 212	8.0	10.0	0.0	50.3	50.3	0.150	0.36	24.9	173.8	0.00	0.	1622.
1 213	9.0	10.0	0.0	49.7	49.7	0.150	0.36	24.6	189.0	0.00	0.	1602.
1 214	11.0	10.0	0.0	42.4	42.4	0.150	0.36	21.5	203.7	0.00	0.	1366.
1 215	12.0	10.0	0.0	29.0	29.0	0.150	0.36	15.9	217.0	0.00	0.	934.
1 216	14.0	10.0	0.0	11.5	11.5	0.150	0.36	8.2	228.8	0.00	0.	372.
1 217	15.0	10.0	0.0	0.3	0.3	0.150	0.36	2.0	236.3	0.00	0.	11.
1 218	15.0	10.0	0.0	0.0	0.0	0.000	0.00	0.0	0.0	0.00	0.	0.
1 219	17.0	10.0	0.0	0.0	0.0	0.000	0.00	0.0	0.0	0.00	0.	0.
1 220	17.0	10.0	0.0	0.0	0.0	0.000	0.00	0.0	0.0	0.00	0.	0.
1 221	18.0	10.0	0.0	0.0	0.0	0.000	0.00	0.0	0.0	0.00	0.	0.
1 222	17.0	10.0	0.0	0.0	0.0	0.000	0.00	0.0	0.0	0.00	0.	0.
1 223	17.0	10.0	0.0	0.0	0.0	0.000	0.00	0.0	0.0	0.00	0.	0.
1 224	17.0	10.0	0.0	0.0	0.0	0.000	0.00	0.0	0.0	0.00	0.	0.
DAILY SUMMARY (JAN 2)												
MN	1.0	0.0	0.0	0.0	0.0	0.000	0.00	0.0	0.0	0.00	0.	0.
MX	18.0	10.0	0.0	50.3	50.3	0.150	0.36	24.9	236.3	0.00	0.	1622.
SM	218.0	205.0	0.0	275.6	275.6	1.500	3.60	149.2	1811.1	0.00	0.	8882.
AV	9.1	8.5	0.0	11.5	11.5	0.062	0.15	6.2	75.5	0.00	0.	370.
MONTHLY SUMMARY (JAN)												
MN	1.0	0.0	0.0	0.0	0.0	0.000	0.00	0.0	0.0	0.00	0.	0.
MX	18.0	10.0	0.0	50.3	50.3	0.150	0.36	24.9	236.3	0.00	0.	1622.
SM	218.0	205.0	0.0	275.6	275.6	1.500	3.60	149.2	1811.1	0.00	0.	8882.
AV	9.1	8.5	0.0	11.5	11.5	0.062	0.15	6.2	75.5	0.00	0.	370.
YEARLY SUMMARY												
MN	1.0	0.0	0.0	0.0	0.0	0.000	0.00	0.0	0.0	0.00	0.	0.
MX	18.0	10.0	0.0	50.3	50.3	0.150	0.36	24.9	236.3	0.00	0.	1622.
SM	218.0	205.0	0.0	275.6	275.6	1.500	3.60	149.2	1811.1	0.00	0.	8882.
AV	9.1	8.5	0.0	11.5	11.5	0.062	0.15	6.2	75.5	0.00	0.	370.

MMDDHH	GLOBAL EXT ILL DIR SOL FOOTCANDLES ----(55)	GLOBAL MES/PRED SKY ILL ----(56)	GLOBAL LUM EFF CLR DIR LUMEN / WATT ----(57)	GLOBAL LUM EFF CLR DIF LUMEN / WATT ----(58)	GLOBAL LUM EFF CLDY DIF LUMEN / WATT ----(59)
1 2 1	0.	0.00	0.0	0.0	0.0
1 2 2	0.	0.00	0.0	0.0	0.0
1 2 3	0.	0.00	0.0	0.0	0.0
1 2 4	0.	0.00	0.0	0.0	0.0
1 2 5	0.	0.00	0.0	0.0	0.0
1 2 6	0.	0.00	0.0	0.0	0.0
1 2 7	0.	0.00	0.0	0.0	0.0
1 2 8	0.	0.27	18.7	125.4	110.0
1 2 9	0.	1.35	50.5	125.4	110.0
1 210	0.	1.71	69.7	125.4	110.0
1 211	0.	1.86	78.2	125.4	110.0
1 212	0.	1.91	81.3	125.4	110.0
1 213	0.	1.91	81.0	125.4	110.0
1 214	0.	1.85	77.0	125.4	110.0
1 215	0.	1.68	66.9	125.4	110.0
1 216	0.	1.23	44.3	125.4	110.0
1 217	0.	0.12	13.0	125.4	110.0
1 218	0.	0.00	0.0	0.0	0.0
1 219	0.	0.00	0.0	0.0	0.0
1 220	0.	0.00	0.0	0.0	0.0
1 221	0.	0.00	0.0	0.0	0.0
1 222	0.	0.00	0.0	0.0	0.0
1 223	0.	0.00	0.0	0.0	0.0
1 224	0.	0.00	0.0	0.0	0.0
DAILY SUMMARY (JAN 2)					
MN	0.	0.00	0.0	0.0	0.0
MX	0.	1.91	81.3	125.4	110.0
SM	0.	13.87	580.5	1254.0	1100.0
AV	0.	0.58	24.2	52.3	45.8
MONTHLY SUMMARY (JAN)					
MN	0.	0.00	0.0	0.0	0.0
MX	0.	1.91	81.3	125.4	110.0
SM	0.	13.87	580.5	1254.0	1100.0
AV	0.	0.58	24.2	52.3	45.8
YEARLY SUMMARY					
MN	0.	0.00	0.0	0.0	0.0
MX	0.	1.91	81.3	125.4	110.0
SM	0.	13.87	580.5	1254.0	1100.0
AV	0.	0.58	24.2	52.3	45.8

MMDDHH	NORTHZONE DAYL ILL REF PT 1 FOOTCANDLES ----(49)	NORTHZONE BAC LUM REF PT 1 FOOTLAMBERT ----(51)	NORTHZONE GLR INDX REF PT 1 ----(53)	NORTHZONE LTPW MUL REF PT 1 ----(55)	NORTHZONE LTPW MUL TOTAL ----(57)	NORTHZONE SPACE LT ELEC BTU/HR ----(45)	SOUTHZONE DAYL ILL REF PT 1 FOOTCANDLES ----(49)	SOUTHZONE BAC LUM REF PT 1 FOOTLAMBERT ----(51)	SOUTHZONE GLR INDX REF PT 1 ----(53)	SOUTHZONE LTPW MUL REF PT 1 ----(55)	SOUTHZONE LTPW MUL TOTAL ----(57)
1 2 1	0.0	0.0	0.0	1.00	1.00	204.78	0.0	0.0	0.0	1.00	1.00
1 2 2	0.0	0.0	0.0	1.00	1.00	204.78	0.0	0.0	0.0	1.00	1.00
1 2 3	0.0	0.0	0.0	1.00	1.00	204.78	0.0	0.0	0.0	1.00	1.00
1 2 4	0.0	0.0	0.0	1.00	1.00	204.78	0.0	0.0	0.0	1.00	1.00
1 2 5	0.0	0.0	0.0	1.00	1.00	204.78	0.0	0.0	0.0	1.00	1.00
1 2 6	0.0	0.0	0.0	1.00	1.00	204.78	0.0	0.0	0.0	1.00	1.00
1 2 7	0.0	0.0	0.0	1.00	1.00	409.56	0.0	0.0	0.0	1.00	1.00
1 2 8	0.7	0.1	0.0	0.99	1.00	1224.64	0.7	0.1	0.0	0.99	1.00
1 2 9	9.6	1.3	4.3	0.90	0.95	3899.60	9.6	1.3	4.3	0.83	0.92
1 210	20.3	2.8	8.4	0.79	0.90	3673.46	20.3	2.8	8.4	0.64	0.82
1 211	28.1	3.9	9.9	0.64	0.82	3353.06	28.1	3.9	9.9	0.51	0.75
1 212	32.0	4.4	10.5	0.56	0.78	3194.87	32.0	4.4	10.5	0.44	0.72
1 213	31.6	4.4	10.5	0.57	0.78	2569.30	31.6	4.4	10.5	0.45	0.72
1 214	26.9	3.7	9.7	0.66	0.83	3402.04	26.9	3.7	9.7	0.53	0.76
1 215	18.4	2.5	7.9	0.82	0.91	3718.23	18.4	2.5	7.9	0.68	0.84
1 216	7.3	1.0	2.8	0.93	0.96	3945.26	7.3	1.0	2.8	0.87	0.94
1 217	0.2	0.0	0.0	1.00	1.00	4091.04	0.2	0.0	0.0	1.00	1.00
1 218	0.0	0.0	0.0	1.00	1.00	2047.78	0.0	0.0	0.0	1.00	1.00
1 219	0.0	0.0	0.0	1.00	1.00	1228.67	0.0	0.0	0.0	1.00	1.00
1 220	0.0	0.0	0.0	1.00	1.00	1228.67	0.0	0.0	0.0	1.00	1.00
1 221	0.0	0.0	0.0	1.00	1.00	819.11	0.0	0.0	0.0	1.00	1.00
1 222	0.0	0.0	0.0	1.00	1.00	819.11	0.0	0.0	0.0	1.00	1.00
1 223	0.0	0.0	0.0	1.00	1.00	819.11	0.0	0.0	0.0	1.00	1.00
1 224	0.0	0.0	0.0	1.00	1.00	204.78	0.0	0.0	0.0	1.00	1.00
DAILY SUMMARY (JAN 2)											
MN	0.0	0.0	0.0	0.56	0.78	204.78	0.0	0.0	0.0	0.44	0.72
MX	32.0	4.4	10.5	1.00	1.00	4091.04	32.0	4.4	10.5	1.00	1.00
SM	175.2	24.2	64.0	21.86	22.93	41876.95	175.2	24.2	64.0	20.94	22.47
AV	7.3	1.0	2.7	0.91	0.96	1744.87	7.3	1.0	2.7	0.87	0.94
MONTHLY SUMMARY (JAN)											
MN	0.0	0.0	0.0	0.56	0.78	204.78	0.0	0.0	0.0	0.44	0.72
MX	32.0	4.4	10.5	1.00	1.00	4091.04	32.0	4.4	10.5	1.00	1.00
SM	175.2	24.2	64.0	21.86	22.93	41876.95	175.2	24.2	64.0	20.94	22.47
AV	7.3	1.0	2.7	0.91	0.96	1744.87	7.3	1.0	2.7	0.87	0.94
YEARLY SUMMARY											
MN	0.0	0.0	0.0	0.56	0.78	204.78	0.0	0.0	0.0	0.44	0.72
MX	32.0	4.4	10.5	1.00	1.00	4091.04	32.0	4.4	10.5	1.00	1.00
SM	175.2	24.2	64.0	21.86	22.93	41876.95	175.2	24.2	64.0	20.94	22.47
AV	7.3	1.0	2.7	0.91	0.96	1744.87	7.3	1.0	2.7	0.87	0.94

MNDDHH	SOUTHZONE SPACE LT ELEC BTU/HR ----(45)	EASTZONE DAYL ILL REF PT 1 FOOTCANDLES ----(49)	EASTZONE BAC LUM REF PT 1 FOOTLAMBERT ----(51)	EASTZONE GLR INDX REF PT 1 ----(53)	EASTZONE LTPW MUL REF PT 1 ----(55)	EASTZONE LTPW MUL TOTAL ----(57)	EASTZONE SPACE LT ELEC BTU/HR ----(45)	WESTZONE DAYL ILL REF PT 1 FOOTCANDLES ----(49)	WESTZONE BAC LUM REF PT 1 FOOTLAMBERT ----(51)	WESTZONE GLR INDX REF PT 1 ----(53)	WESTZONE LTPW MUL REF PT 1 ----(55)
1 2 1	204.78	0.0	0.0	0.0	1.00	1.00	204.78	0.0	0.0	0.0	1.00
1 2 2	204.78	0.0	0.0	0.0	1.00	1.00	204.78	0.0	0.0	0.0	1.00
1 2 3	204.78	0.0	0.0	0.0	1.00	1.00	204.78	0.0	0.0	0.0	1.00
1 2 4	204.78	0.0	0.0	0.0	1.00	1.00	204.78	0.0	0.0	0.0	1.00
1 2 5	204.78	0.0	0.0	0.0	1.00	1.00	204.78	0.0	0.0	0.0	1.00
1 2 6	204.78	0.0	0.0	0.0	1.00	1.00	204.78	0.0	0.0	0.0	1.00
1 2 7	409.56	0.0	0.0	0.0	1.00	1.00	409.56	0.0	0.0	0.0	1.00
1 2 8	1224.39	0.7	0.1	0.0	0.99	1.00	1224.39	0.7	0.1	0.0	0.99
1 2 9	3752.62	9.6	1.3	4.3	0.83	0.92	3752.62	9.6	1.3	4.3	0.83
1 210	3367.86	20.3	2.8	8.4	0.64	0.82	3367.86	20.3	2.8	8.4	0.64
1 211	3087.51	28.1	3.9	9.9	0.51	0.75	3087.51	28.1	3.9	9.9	0.51
1 212	2949.09	32.0	4.4	10.5	0.44	0.72	2949.09	32.0	4.4	10.5	0.44
1 213	2371.01	31.6	4.4	10.5	0.45	0.72	2371.01	31.6	4.4	10.5	0.45
1 214	3130.37	26.9	3.7	9.7	0.53	0.76	3130.37	26.9	3.7	9.7	0.53
1 215	3435.23	18.4	2.5	7.9	0.68	0.84	3435.23	18.4	2.5	7.9	0.68
1 216	3832.53	7.3	1.0	2.8	0.87	0.94	3832.53	7.3	1.0	2.8	0.87
1 217	4092.25	0.2	0.0	0.0	1.00	1.00	4092.25	0.2	0.0	0.0	1.00
1 218	2047.78	0.0	0.0	0.0	1.00	1.00	2047.78	0.0	0.0	0.0	1.00
1 219	1228.67	0.0	0.0	0.0	1.00	1.00	1228.67	0.0	0.0	0.0	1.00
1 220	1228.67	0.0	0.0	0.0	1.00	1.00	1228.67	0.0	0.0	0.0	1.00
1 221	819.11	0.0	0.0	0.0	1.00	1.00	819.11	0.0	0.0	0.0	1.00
1 222	819.11	0.0	0.0	0.0	1.00	1.00	819.11	0.0	0.0	0.0	1.00
1 223	819.11	0.0	0.0	0.0	1.00	1.00	819.11	0.0	0.0	0.0	1.00
1 224	204.78	0.0	0.0	0.0	1.00	1.00	204.78	0.0	0.0	0.0	1.00
DAILY SUMMARY (JAN 2)											
MN	204.78	0.0	0.0	0.0	0.44	0.72	204.78	0.0	0.0	0.0	0.44
MX	4092.25	32.0	4.4	10.5	1.00	1.00	4092.25	32.0	4.4	10.5	1.00
SM	40048.32	175.2	24.2	64.0	20.94	22.47	40048.32	175.2	24.2	64.0	20.94
AV	1668.68	7.3	1.0	2.7	0.87	0.94	1668.68	7.3	1.0	2.7	0.87
MONTHLY SUMMARY (JAN)											
MN	204.78	0.0	0.0	0.0	0.44	0.72	204.78	0.0	0.0	0.0	0.44
MX	4092.25	32.0	4.4	10.5	1.00	1.00	4092.25	32.0	4.4	10.5	1.00
SM	40048.32	175.2	24.2	64.0	20.94	22.47	40048.32	175.2	24.2	64.0	20.94
AV	1668.68	7.3	1.0	2.7	0.87	0.94	1668.68	7.3	1.0	2.7	0.87
YEARLY SUMMARY											
MN	204.78	0.0	0.0	0.0	0.44	0.72	204.78	0.0	0.0	0.0	0.44
MX	4092.25	32.0	4.4	10.5	1.00	1.00	4092.25	32.0	4.4	10.5	1.00
SM	40048.32	175.2	24.2	64.0	20.94	22.47	40048.32	175.2	24.2	64.0	20.94
AV	1668.68	7.3	1.0	2.7	0.87	0.94	1668.68	7.3	1.0	2.7	0.87

MMDDHH	WESTZONE LTPW MUL TOTAL	WESTZONE SPACE LT ELEC BTU/HR
	----(57)	----(45)
1 2 1	1.00	204.78
1 2 2	1.00	204.78
1 2 3	1.00	204.78
1 2 4	1.00	204.78
1 2 5	1.00	204.78
1 2 6	1.00	204.78
1 2 7	1.00	409.56
1 2 8	1.00	1224.39
1 2 9	0.92	3752.62
1 210	0.82	3367.86
1 211	0.75	3087.51
1 212	0.72	2949.09
1 213	0.72	2371.01
1 214	0.76	3130.37
1 215	0.84	3435.23
1 216	0.94	3832.53
1 217	1.00	4092.25
1 218	1.00	2047.78
1 219	1.00	1228.67
1 220	1.00	1228.67
1 221	1.00	819.11
1 222	1.00	819.11
1 223	1.00	819.11
1 224	1.00	204.78

DAILY SUMMARY (JAN 2)

MN	0.72	204.78
MX	1.00	4092.25
SM	22.47	40048.32
AV	0.94	1668.68

MONTHLY SUMMARY (JAN)

MN	0.72	204.78
MX	1.00	4092.25
SM	22.47	40048.32
AV	0.94	1668.68

YEARLY SUMMARY

MN	0.72	204.78
MX	1.00	4092.25
SM	22.47	40048.32
AV	0.94	1668.68

MMDDHH	NORTHWIND U-VALUE GLAS+FRM BTU/HR-SQFT-F ----(1)	NORTHWIND THN COEF DIRECT ----(2)	NORTHWIND THN COEF DIFFUSE ----(4)	NORTHWIND SHADED FRACTION FRAC.OR MULT. ----(10)	NORTHWIND DIRECT SOLAR BTU/HR-SQFT ----(11)	NORTHWIND DIFFUSE SOLAR BTU/HR-SQFT ----(12)	NORTHWIND SOL GAIN GLAS+FRM BTU/HR ----(15)	NORTHWIND CONDUCTN GLAS+FRM BTU/HR ----(17)	NORTHWIND SHADING FLAG ----(23)	NORTHWIND SHADING COEFF ----(16)	NORTHWIND SH COEFF MULT ----(19)
1 2 1	0.353	0.000	0.000	0.000	0.0	0.0	0.0	-1696.58	1.	0.830	0.00
1 2 2	0.359	0.000	0.000	0.000	0.0	0.0	0.0	-1726.49	1.	0.830	0.00
1 2 3	0.358	0.000	0.000	0.000	0.0	0.0	0.0	-1723.39	1.	0.830	0.00
1 2 4	0.358	0.000	0.000	0.000	0.0	0.0	0.0	-1714.29	1.	0.830	0.00
1 2 5	0.398	0.000	0.000	0.000	0.0	0.0	0.0	-1838.71	1.	0.830	0.00
1 2 6	0.355	0.000	0.000	0.000	0.0	0.0	0.0	-1642.58	1.	0.830	0.00
1 2 7	0.399	0.000	0.000	0.000	0.0	0.0	0.0	-1793.45	1.	0.830	0.00
1 2 8	0.355	0.000	0.799	0.000	0.0	0.6	24.0	-1599.51	1.	0.830	1.00
1 2 9	0.361	0.000	0.799	0.000	0.0	7.9	320.5	-1624.74	1.	0.830	1.00
1 210	0.360	0.000	0.799	0.000	0.0	16.1	656.8	-1597.22	1.	0.830	1.00
1 211	0.395	0.000	0.799	0.000	0.0	22.0	893.8	-1704.36	1.	0.830	1.00
1 212	0.357	0.000	0.799	0.000	0.0	24.9	1015.7	-1514.27	1.	0.830	1.00
1 213	0.362	0.000	0.799	0.000	0.0	24.6	1002.6	-1508.89	1.	0.830	1.00
1 214	0.361	0.000	0.799	0.000	0.0	21.1	860.7	-1462.54	1.	0.830	1.00
1 215	0.396	0.000	0.799	0.000	0.0	14.7	595.9	-1561.53	1.	0.830	1.00
1 216	0.407	0.000	0.799	0.000	0.0	6.1	247.3	-1550.29	1.	0.830	1.00
1 217	0.395	0.000	0.799	0.000	0.0	0.2	8.1	-1483.40	1.	0.830	1.00
1 218	0.395	0.000	0.000	0.000	0.0	0.0	0.0	-1485.00	1.	0.830	0.00
1 219	0.408	0.000	0.000	0.000	0.0	0.0	0.0	-1477.76	1.	0.830	0.00
1 220	0.419	0.000	0.000	0.000	0.0	0.0	0.0	-1512.79	1.	0.830	0.00
1 221	0.408	0.000	0.000	0.000	0.0	0.0	0.0	-1450.48	1.	0.830	0.00
1 222	0.419	0.000	0.000	0.000	0.0	0.0	0.0	-1511.53	1.	0.830	0.00
1 223	0.357	0.000	0.000	0.000	0.0	0.0	0.0	-1316.61	1.	0.830	0.00
1 224	0.398	0.000	0.000	0.000	0.0	0.0	0.0	-1444.03	1.	0.830	0.00
DAILY SUMMARY (JAN 2)											
MN	0.353	0.000	0.000	0.000	0.0	0.0	0.0	-1838.71	1.	0.830	0.00
MX	0.419	0.000	0.799	0.000	0.0	24.9	1015.7	-1316.61	1.	0.830	1.00
SM	9.133	0.000	7.990	0.000	0.0	138.1	5625.4	-37940.43	24.	19.920	10.00
AV	0.381	0.000	0.333	0.000	0.0	5.8	234.4	-1580.85	1.	0.830	0.42
MONTHLY SUMMARY (JAN)											
MN	0.353	0.000	0.000	0.000	0.0	0.0	0.0	-1838.71	1.	0.830	0.00
MX	0.419	0.000	0.799	0.000	0.0	24.9	1015.7	-1316.61	1.	0.830	1.00
SM	9.133	0.000	7.990	0.000	0.0	138.1	5625.4	-37940.43	24.	19.920	10.00
AV	0.381	0.000	0.333	0.000	0.0	5.8	234.4	-1580.85	1.	0.830	0.42
YEARLY SUMMARY											
MN	0.353	0.000	0.000	0.000	0.0	0.0	0.0	-1838.71	1.	0.830	0.00
MX	0.419	0.000	0.799	0.000	0.0	24.9	1015.7	-1316.61	1.	0.830	1.00
SM	9.133	0.000	7.990	0.000	0.0	138.1	5625.4	-37940.43	24.	19.920	10.00
AV	0.381	0.000	0.333	0.000	0.0	5.8	234.4	-1580.85	1.	0.830	0.42

MMDDHH	NORTHWIND GLASS VIS TRAN ----(21)	NORTHWIND VIS TRAN MULT ----(22)	NORTHWIND MAX SOL GAIN BTU/HR-SQFT ----(20)	NORTHWIND SHADING FLAG ----(23)	NORTHWIND ILL W/SH REF PT 1 FOOTCANDLES ----(26)	SOUTHWIND U-VALUE GLAS+FRM BTU/HR-SQFT-F ----(1)	SOUTHWIND TMN COEF DIRECT ----(2)	SOUTHWIND TMN COEF DIFFUSE ----(4)	SOUTHWIND SHADED FRACTION FRAC.OR MULT. ----(10)	SOUTHWIND DIRECT SOLAR BTU/HR-SQFT ----(11)	SOUTHWIND DIFFUSE SOLAR BTU/HR-SQFT ----(12)
1 2 1	0.00	1.00	0.0	1.	0.0	0.354	0.000	0.000	0.000	0.0	0.0
1 2 2	0.00	1.00	0.0	1.	0.0	0.359	0.000	0.000	0.000	0.0	0.0
1 2 3	0.00	1.00	0.0	1.	0.0	0.358	0.000	0.000	0.000	0.0	0.0
1 2 4	0.00	1.00	0.0	1.	0.0	0.358	0.000	0.000	0.000	0.0	0.0
1 2 5	0.00	1.00	0.0	1.	0.0	0.393	0.000	0.000	0.000	0.0	0.0
1 2 6	0.00	1.00	0.0	1.	0.0	0.355	0.000	0.000	0.000	0.0	0.0
1 2 7	0.00	1.00	0.0	1.	0.0	0.394	0.000	0.000	0.000	0.0	0.0
1 2 8	0.00	1.00	20.0	1.	0.2	0.356	0.825	0.799	0.000	0.0	0.3
1 2 9	0.00	1.00	20.0	1.	2.8	0.361	0.850	0.799	0.000	0.0	8.6
1 210	0.00	1.00	20.0	1.	6.0	0.360	0.860	0.799	0.000	0.0	21.1
1 211	0.00	1.00	20.0	1.	8.3	0.400	0.864	0.799	0.000	0.0	30.7
1 212	0.00	1.00	20.0	1.	9.5	0.356	0.867	0.799	0.000	0.0	35.7
1 213	0.00	1.00	20.0	1.	9.3	0.362	0.866	0.799	0.000	0.0	35.1
1 214	0.00	1.00	20.0	1.	8.0	0.362	0.864	0.799	0.000	0.0	29.2
1 215	0.00	1.00	20.0	1.	5.4	0.401	0.859	0.799	0.000	0.0	18.8
1 216	0.00	1.00	20.0	1.	2.2	0.409	0.846	0.799	0.000	0.0	6.2
1 217	0.00	1.00	20.0	1.	0.1	0.400	0.820	0.799	0.000	0.0	0.1
1 218	0.00	1.00	0.0	1.	0.0	0.400	0.000	0.000	0.000	0.0	0.0
1 219	0.00	1.00	0.0	1.	0.0	0.409	0.000	0.000	0.000	0.0	0.0
1 220	0.00	1.00	0.0	1.	0.0	0.417	0.000	0.000	0.000	0.0	0.0
1 221	0.00	1.00	0.0	1.	0.0	0.409	0.000	0.000	0.000	0.0	0.0
1 222	0.00	1.00	0.0	1.	0.0	0.417	0.000	0.000	0.000	0.0	0.0
1 223	0.00	1.00	0.0	1.	0.0	0.357	0.000	0.000	0.000	0.0	0.0
1 224	0.00	1.00	0.0	1.	0.0	0.402	0.000	0.000	0.000	0.0	0.0
DAILY SUMMARY (JAN 2)											
MN	0.00	1.00	0.0	1.	0.0	0.354	0.000	0.000	0.000	0.0	0.0
MX	0.00	1.00	20.0	1.	9.5	0.417	0.867	0.799	0.000	0.0	35.7
SM	0.00	24.00	200.0	24.	51.8	9.152	8.521	7.990	0.000	0.0	186.0
AV	0.00	1.00	8.3	1.	2.2	0.381	0.355	0.333	0.000	0.0	7.7
MONTHLY SUMMARY (JAN)											
MN	0.00	1.00	0.0	1.	0.0	0.354	0.000	0.000	0.000	0.0	0.0
MX	0.00	1.00	20.0	1.	9.5	0.417	0.867	0.799	0.000	0.0	35.7
SM	0.00	24.00	200.0	24.	51.8	9.152	8.521	7.990	0.000	0.0	186.0
AV	0.00	1.00	8.3	1.	2.2	0.381	0.355	0.333	0.000	0.0	7.7
YEARLY SUMMARY											
MN	0.00	1.00	0.0	1.	0.0	0.354	0.000	0.000	0.000	0.0	0.0
MX	0.00	1.00	20.0	1.	9.5	0.417	0.867	0.799	0.000	0.0	35.7
SM	0.00	24.00	200.0	24.	51.8	9.152	8.521	7.990	0.000	0.0	186.0
AV	0.00	1.00	8.3	1.	2.2	0.381	0.355	0.333	0.000	0.0	7.7

MMDDHH	SOUTHWIND SOL GAIN GLAS+FRM BTU/HR	SOUTHWIND CONDUCTN GLAS+FRM BTU/HR	SOUTHWIND SHADING FLAG	SOUTHWIND SHADING COEFF	SOUTHWIND SH COEFF MULT	SOUTHWIND GLASS VIS TRAN	SOUTHWIND VIS TRAN MULT	SOUTHWIND MAX SOL GAIN BTU/HR-SQFT	SOUTHWIND SHADING FLAG	SOUTHWIND ILL W/SH REF PT 1 FOOTCANDLES
	----(15)	----(17)	----(23)	----(16)	----(19)	----(21)	----(22)	----(20)	----(23)	----(26)
1 2 1	0.0	-1698.99	1.	0.830	0.00	0.00	1.00	0.0	1.	0.0
1 2 2	0.0	-1726.25	1.	0.830	0.00	0.00	1.00	0.0	1.	0.0
1 2 3	0.0	-1723.41	1.	0.830	0.00	0.00	1.00	0.0	1.	0.0
1 2 4	0.0	-1714.29	1.	0.830	0.00	0.00	1.00	0.0	1.	0.0
1 2 5	0.0	-1818.91	1.	0.830	0.00	0.00	1.00	0.0	1.	0.0
1 2 6	0.0	-1645.01	1.	0.830	0.00	0.00	1.00	0.0	1.	0.0
1 2 7	0.0	-1773.38	1.	0.830	0.00	0.00	1.00	0.0	1.	0.0
1 2 8	13.9	-1601.95	1.	0.830	1.00	0.64	1.00	20.0	1.	0.2
1 2 9	350.4	-1624.45	1.	0.830	1.00	0.66	1.00	20.0	1.	2.8
1 210	860.1	-1597.34	1.	0.830	1.00	0.67	1.00	20.0	1.	6.0
1 211	1248.6	-1723.60	1.	0.830	1.00	0.67	1.00	20.0	1.	8.3
1 212	1455.5	-1512.94	1.	0.830	1.00	0.67	1.00	20.0	1.	9.5
1 213	1433.0	-1510.33	1.	0.830	1.00	0.67	1.00	20.0	1.	9.3
1 214	1192.9	-1463.66	1.	0.830	1.00	0.67	1.00	20.0	1.	8.0
1 215	764.2	-1579.05	1.	0.830	1.00	0.67	1.00	20.0	1.	5.4
1 216	253.3	-1555.22	1.	0.830	1.00	0.66	1.00	20.0	1.	2.2
1 217	4.1	-1500.24	1.	0.830	1.00	0.63	1.00	20.0	1.	0.1
1 218	0.0	-1501.09	1.	0.830	0.00	0.00	1.00	0.0	1.	0.0
1 219	0.0	-1482.34	1.	0.830	0.00	0.00	1.00	0.0	1.	0.0
1 220	0.0	-1506.99	1.	0.830	0.00	0.00	1.00	0.0	1.	0.0
1 221	0.0	-1455.77	1.	0.830	0.00	0.00	1.00	0.0	1.	0.0
1 222	0.0	-1505.72	1.	0.830	0.00	0.00	1.00	0.0	1.	0.0
1 223	0.0	-1317.27	1.	0.830	0.00	0.00	1.00	0.0	1.	0.0
1 224	0.0	-1459.62	1.	0.830	0.00	0.00	1.00	0.0	1.	0.0
DAILY SUMMARY (JAN 2)										
MN	0.0	-1818.91	1.	0.830	0.00	0.00	1.00	0.0	1.	0.0
MX	1455.5	-1317.27	1.	0.830	1.00	0.67	1.00	20.0	1.	9.5
SM	7576.1	-37997.83	24.	19.920	10.00	6.60	24.00	200.0	24.	51.8
AV	315.7	-1583.24	1.	0.830	0.42	0.27	1.00	8.3	1.	2.2
MONTHLY SUMMARY (JAN)										
MN	0.0	-1818.91	1.	0.830	0.00	0.00	1.00	0.0	1.	0.0
MX	1455.5	-1317.27	1.	0.830	1.00	0.67	1.00	20.0	1.	9.5
SM	7576.1	-37997.83	24.	19.920	10.00	6.60	24.00	200.0	24.	51.8
AV	315.7	-1583.24	1.	0.830	0.42	0.27	1.00	8.3	1.	2.2
YEARLY SUMMARY										
MN	0.0	-1818.91	1.	0.830	0.00	0.00	1.00	0.0	1.	0.0
MX	1455.5	-1317.27	1.	0.830	1.00	0.67	1.00	20.0	1.	9.5
SM	7576.1	-37997.83	24.	19.920	10.00	6.60	24.00	200.0	24.	51.8
AV	315.7	-1583.24	1.	0.830	0.42	0.27	1.00	8.3	1.	2.2

MMDDHH	EASTWIND U-VALUE GLAS+FRM BTU/HR-SQFT-F ----(1)	EASTWIND TMN COEF DIRECT ----(2)	EASTWIND TMN COEF DIFFUSE ----(4)	EASTWIND SHADED FRACTION FRAC.OR MULT. ----(10)	EASTWIND DIRECT SOLAR BTU/HR-SQFT ----(11)	EASTWIND DIFFUSE SOLAR BTU/HR-SQFT ----(12)	EASTWIND SOL GAIN GLAS+FRM BTU/HR ----(15)	EASTWIND CONDUCTN GLAS+FRM BTU/HR ----(17)	EASTWIND SHADING FLAG ----(23)	EASTWIND SHADING COEFF ----(16)	EASTWIND SH COEFF MULT ----(19)
1 2 1	0.353	0.000	0.000	0.000	0.0	0.0	0.0	-1696.58	1.	0.830	0.00
1 2 2	0.359	0.000	0.000	0.000	0.0	0.0	0.0	-1726.49	1.	0.830	0.00
1 2 3	0.358	0.000	0.000	0.000	0.0	0.0	0.0	-1723.39	1.	0.830	0.00
1 2 4	0.358	0.000	0.000	0.000	0.0	0.0	0.0	-1714.29	1.	0.830	0.00
1 2 5	0.398	0.000	0.000	0.000	0.0	0.0	0.0	-1838.71	1.	0.830	0.00
1 2 6	0.355	0.000	0.000	0.000	0.0	0.0	0.0	-1642.58	1.	0.830	0.00
1 2 7	0.399	0.000	0.000	0.000	0.0	0.0	0.0	-1793.45	1.	0.830	0.00
1 2 8	0.355	0.862	0.799	0.000	0.0	0.2	9.4	-1599.51	1.	0.830	1.00
1 2 9	0.361	0.855	0.799	0.000	0.0	8.6	352.1	-1624.69	1.	0.830	1.00
1 210	0.360	0.815	0.799	0.000	0.0	19.5	796.8	-1597.32	1.	0.830	1.00
1 211	0.400	0.659	0.799	0.000	0.0	25.4	1030.9	-1723.52	1.	0.830	1.00
1 212	0.356	0.254	0.799	0.000	0.0	26.8	1094.5	-1512.32	1.	0.830	1.00
1 213	0.362	0.000	0.799	0.000	0.0	25.2	1026.1	-1509.32	1.	0.830	1.00
1 214	0.361	0.000	0.799	0.000	0.0	21.1	861.4	-1462.57	1.	0.830	1.00
1 215	0.396	0.000	0.799	0.000	0.0	14.7	595.9	-1561.53	1.	0.830	1.00
1 216	0.407	0.000	0.799	0.000	0.0	6.1	247.3	-1550.29	1.	0.830	1.00
1 217	0.395	0.000	0.799	0.000	0.0	0.2	8.1	-1483.40	1.	0.830	1.00
1 218	0.395	0.000	0.000	0.000	0.0	0.0	0.0	-1485.00	1.	0.830	0.00
1 219	0.408	0.000	0.000	0.000	0.0	0.0	0.0	-1477.76	1.	0.830	0.00
1 220	0.419	0.000	0.000	0.000	0.0	0.0	0.0	-1512.79	1.	0.830	0.00
1 221	0.409	0.000	0.000	0.000	0.0	0.0	0.0	-1455.57	1.	0.830	0.00
1 222	0.417	0.000	0.000	0.000	0.0	0.0	0.0	-1505.73	1.	0.830	0.00
1 223	0.357	0.000	0.000	0.000	0.0	0.0	0.0	-1317.27	1.	0.830	0.00
1 224	0.402	0.000	0.000	0.000	0.0	0.0	0.0	-1459.62	1.	0.830	0.00
DAILY SUMMARY (JAN 2)											
MN	0.353	0.000	0.000	0.000	0.0	0.0	0.0	-1838.71	1.	0.830	0.00
MX	0.419	0.862	0.799	0.000	0.0	26.8	1094.5	-1317.27	1.	0.830	1.00
SM	9.143	3.446	7.990	0.000	0.0	147.8	6022.6	-37973.70	24.	19.920	10.00
AV	0.381	0.144	0.333	0.000	0.0	6.2	250.9	-1582.24	1.	0.830	0.42
MONTHLY SUMMARY (JAN)											
MN	0.353	0.000	0.000	0.000	0.0	0.0	0.0	-1838.71	1.	0.830	0.00
MX	0.419	0.862	0.799	0.000	0.0	26.8	1094.5	-1317.27	1.	0.830	1.00
SM	9.143	3.446	7.990	0.000	0.0	147.8	6022.6	-37973.70	24.	19.920	10.00
AV	0.381	0.144	0.333	0.000	0.0	6.2	250.9	-1582.24	1.	0.830	0.42
YEARLY SUMMARY											
MN	0.353	0.000	0.000	0.000	0.0	0.0	0.0	-1838.71	1.	0.830	0.00
MX	0.419	0.862	0.799	0.000	0.0	26.8	1094.5	-1317.27	1.	0.830	1.00
SM	9.143	3.446	7.990	0.000	0.0	147.8	6022.6	-37973.70	24.	19.920	10.00
AV	0.381	0.144	0.333	0.000	0.0	6.2	250.9	-1582.24	1.	0.830	0.42

MMDDHH	EASTWIND GLASS VIS TRAN ----(21)	EASTWIND VIS TRAN MULT ----(22)	EASTWIND MAX SOL GAIN BTU/HR-SQFT ----(20)	EASTWIND SHADING FLAG ----(23)	EASTWIND ILL W/SH REF PT 1 FOOTCANDLES ----(26)	WESTWIND U-VALUE GLAS+FRM BTU/HR-SQFT-F ----(1)	WESTWIND THN COEF DIRECT ----(2)	WESTWIND THN COEF DIFFUSE ----(4)	WESTWIND SHADED FRACTION FRAC.OR MULT. ----(10)	WESTWIND DIRECT SOLAR BTU/HR-SQFT ----(11)	WESTWIND DIFFUSE SOLAR BTU/HR-SQFT ----(12)
1 2 1	0.00	1.00	0.0	1.	0.0	0.354	0.000	0.000	0.000	0.0	0.0
1 2 2	0.00	1.00	0.0	1.	0.0	0.359	0.000	0.000	0.000	0.0	0.0
1 2 3	0.00	1.00	0.0	1.	0.0	0.358	0.000	0.000	0.000	0.0	0.0
1 2 4	0.00	1.00	0.0	1.	0.0	0.358	0.000	0.000	0.000	0.0	0.0
1 2 5	0.00	1.00	0.0	1.	0.0	0.393	0.000	0.000	0.000	0.0	0.0
1 2 6	0.00	1.00	0.0	1.	0.0	0.355	0.000	0.000	0.000	0.0	0.0
1 2 7	0.00	1.00	0.0	1.	0.0	0.394	0.000	0.000	0.000	0.0	0.0
1 2 8	0.67	1.00	20.0	1.	0.2	0.356	0.000	0.799	0.000	0.0	0.6
1 2 9	0.66	1.00	20.0	1.	2.8	0.361	0.000	0.799	0.000	0.0	7.9
1 210	0.63	1.00	20.0	1.	6.0	0.360	0.000	0.799	0.000	0.0	16.1
1 211	0.51	1.00	20.0	1.	8.3	0.395	0.000	0.799	0.000	0.0	22.1
1 212	0.20	1.00	20.0	1.	9.5	0.357	0.000	0.799	0.000	0.0	25.7
1 213	0.00	1.00	20.0	1.	9.3	0.362	0.357	0.799	0.000	0.0	26.8
1 214	0.00	1.00	20.0	1.	8.0	0.361	0.704	0.799	0.000	0.0	24.7
1 215	0.00	1.00	20.0	1.	5.4	0.401	0.828	0.799	0.000	0.0	17.8
1 216	0.00	1.00	20.0	1.	2.2	0.409	0.858	0.799	0.000	0.0	6.3
1 217	0.00	1.00	20.0	1.	0.1	0.400	0.863	0.799	0.000	0.0	0.1
1 218	0.00	1.00	0.0	1.	0.0	0.400	0.000	0.000	0.000	0.0	0.0
1 219	0.00	1.00	0.0	1.	0.0	0.409	0.000	0.000	0.000	0.0	0.0
1 220	0.00	1.00	0.0	1.	0.0	0.417	0.000	0.000	0.000	0.0	0.0
1 221	0.00	1.00	0.0	1.	0.0	0.408	0.000	0.000	0.000	0.0	0.0
1 222	0.00	1.00	0.0	1.	0.0	0.419	0.000	0.000	0.000	0.0	0.0
1 223	0.00	1.00	0.0	1.	0.0	0.357	0.000	0.000	0.000	0.0	0.0
1 224	0.00	1.00	0.0	1.	0.0	0.398	0.000	0.000	0.000	0.0	0.0
DAILY SUMMARY (JAN 2)											
MN	0.00	1.00	0.0	1.	0.0	0.354	0.000	0.000	0.000	0.0	0.0
MX	0.67	1.00	20.0	1.	9.5	0.419	0.863	0.799	0.000	0.0	26.8
SM	2.67	24.00	200.0	24.	51.8	9.141	3.609	7.990	0.000	0.0	147.9
AV	0.11	1.00	8.3	1.	2.2	0.381	0.150	0.333	0.000	0.0	6.2
MONTHLY SUMMARY (JAN)											
MN	0.00	1.00	0.0	1.	0.0	0.354	0.000	0.000	0.000	0.0	0.0
MX	0.67	1.00	20.0	1.	9.5	0.419	0.863	0.799	0.000	0.0	26.8
SM	2.67	24.00	200.0	24.	51.8	9.141	3.609	7.990	0.000	0.0	147.9
AV	0.11	1.00	8.3	1.	2.2	0.381	0.150	0.333	0.000	0.0	6.2
YEARLY SUMMARY											
MN	0.00	1.00	0.0	1.	0.0	0.354	0.000	0.000	0.000	0.0	0.0
MX	0.67	1.00	20.0	1.	9.5	0.419	0.863	0.799	0.000	0.0	26.8
SM	2.67	24.00	200.0	24.	51.8	9.141	3.609	7.990	0.000	0.0	147.9
AV	0.11	1.00	8.3	1.	2.2	0.381	0.150	0.333	0.000	0.0	6.2

MMDDHH	WESTWIND SOL GAIN GLAS+FRM BTU/HR ----(15)	WESTWIND CONDUCTN GLAS+FRM BTU/HR ----(17)	WESTWIND SHADING FLAG ----(23)	WESTWIND SHADING COEFF ----(16)	WESTWIND SH COEFF MULT ----(19)	WESTWIND GLASS VIS TRAN ----(21)	WESTWIND VIS TRAN MULT ----(22)	WESTWIND MAX SOL GAIN BTU/HR-SQFT ----(20)	WESTWIND SHADING FLAG ----(23)	WESTWIND ILL W/SH REF PT 1 FOOTCANDLES ----(26)
1 2 1	0.0	-1698.99	1.	0.830	0.00	0.00	1.00	0.0	1.	0.0
1 2 2	0.0	-1726.25	1.	0.830	0.00	0.00	1.00	0.0	1.	0.0
1 2 3	0.0	-1723.41	1.	0.830	0.00	0.00	1.00	0.0	1.	0.0
1 2 4	0.0	-1714.29	1.	0.830	0.00	0.00	1.00	0.0	1.	0.0
1 2 5	0.0	-1818.91	1.	0.830	0.00	0.00	1.00	0.0	1.	0.0
1 2 6	0.0	-1645.01	1.	0.830	0.00	0.00	1.00	0.0	1.	0.0
1 2 7	0.0	-1773.38	1.	0.830	0.00	0.00	1.00	0.0	1.	0.0
1 2 8	23.9	-1601.95	1.	0.830	1.00	0.00	1.00	20.0	1.	0.2
1 2 9	320.5	-1624.49	1.	0.830	1.00	0.00	1.00	20.0	1.	2.8
1 210	656.8	-1597.24	1.	0.830	1.00	0.00	1.00	20.0	1.	6.0
1 211	896.1	-1704.35	1.	0.830	1.00	0.00	1.00	20.0	1.	8.3
1 212	1047.6	-1514.27	1.	0.830	1.00	0.00	1.00	20.0	1.	9.5
1 213	1093.6	-1508.98	1.	0.830	1.00	0.28	1.00	20.0	1.	9.3
1 214	1006.4	-1462.80	1.	0.830	1.00	0.54	1.00	20.0	1.	8.0
1 215	722.6	-1578.87	1.	0.830	1.00	0.64	1.00	20.0	1.	5.4
1 216	254.2	-1555.19	1.	0.830	1.00	0.66	1.00	20.0	1.	2.2
1 217	2.1	-1500.24	1.	0.830	1.00	0.67	1.00	20.0	1.	0.1
1 218	0.0	-1501.09	1.	0.830	0.00	0.00	1.00	0.0	1.	0.0
1 219	0.0	-1482.34	1.	0.830	0.00	0.00	1.00	0.0	1.	0.0
1 220	0.0	-1506.99	1.	0.830	0.00	0.00	1.00	0.0	1.	0.0
1 221	0.0	-1450.68	1.	0.830	0.00	0.00	1.00	0.0	1.	0.0
1 222	0.0	-1511.52	1.	0.830	0.00	0.00	1.00	0.0	1.	0.0
1 223	0.0	-1316.61	1.	0.830	0.00	0.00	1.00	0.0	1.	0.0
1 224	0.0	-1444.03	1.	0.830	0.00	0.00	1.00	0.0	1.	0.0
DAILY SUMMARY (JAN 2)										
MN	0.0	-1818.91	1.	0.830	0.00	0.00	1.00	0.0	1.	0.0
MX	1093.6	-1316.61	1.	0.830	1.00	0.67	1.00	20.0	1.	9.5
SM	6023.9	-37961.89	24.	19.920	10.00	2.79	24.00	200.0	24.	51.8
AV	251.0	-1581.75	1.	0.830	0.42	0.12	1.00	8.3	1.	2.2
MONTHLY SUMMARY (JAN)										
MN	0.0	-1818.91	1.	0.830	0.00	0.00	1.00	0.0	1.	0.0
MX	1093.6	-1316.61	1.	0.830	1.00	0.67	1.00	20.0	1.	9.5
SM	6023.9	-37961.89	24.	19.920	10.00	2.79	24.00	200.0	24.	51.8
AV	251.0	-1581.75	1.	0.830	0.42	0.12	1.00	8.3	1.	2.2
YEARLY SUMMARY										
MN	0.0	-1818.91	1.	0.830	0.00	0.00	1.00	0.0	1.	0.0
MX	1093.6	-1316.61	1.	0.830	1.00	0.67	1.00	20.0	1.	9.5
SM	6023.9	-37961.89	24.	19.920	10.00	2.79	24.00	200.0	24.	51.8
AV	251.0	-1581.75	1.	0.830	0.42	0.12	1.00	8.3	1.	2.2

SYMBOL	COMPONENT NAME	(NO.)	DESCRIPTION	AXIS	UNIT
1	GLOBAL	(15)	GLOBAL SOLAR	1	BTU/HR- SQFT
2	SOUTHZONE	(49)	DAYL ILLREF PT 1 2		FOOTCANDLES

```
                                   INTERIOR DAYLITE
0.00000E+00        0.20000E+02        0.40000E+02        0.60000E+02        0.80000E+02        0.10000E+03
     I......... .........I......... .........I......... .........I......... .........I......... .........I
                                   EXTERIOR SOLAR
0.00000E+00        0.10000E+03        0.20000E+03        0.30000E+03        0.40000E+03        0.50000E+03
     I......... .........I......... .........I......... .........I......... .........I......... .........I
1 2  7 *                                                                                                   .
1 2  8 12                                                                                                  .
1 2  9 .  1     2                                                                                          .
1 2 10 .    1            2                                                                                 .
1 2 11 .      1                 2                                                                          .
1 2 12 .        1                   2                                                                    .
1 2 13 .        1                   2                                                                    .
1 2 14 .      1                 2                                                                          .
1 2 15 .    1          2                                                                                   .
1 2 16 . 1    2                                                                                            .
1 2 17 *                                                                                                   .
1 2 18 *                                                                                                   .
1 2 19 *                                                                                                   .
     I......... .........I......... .........I......... .........I......... .........I......... .........I
```

Sunspace Example

Single Family Residence. Floor plan and section for ranch house with an attached sunspace.

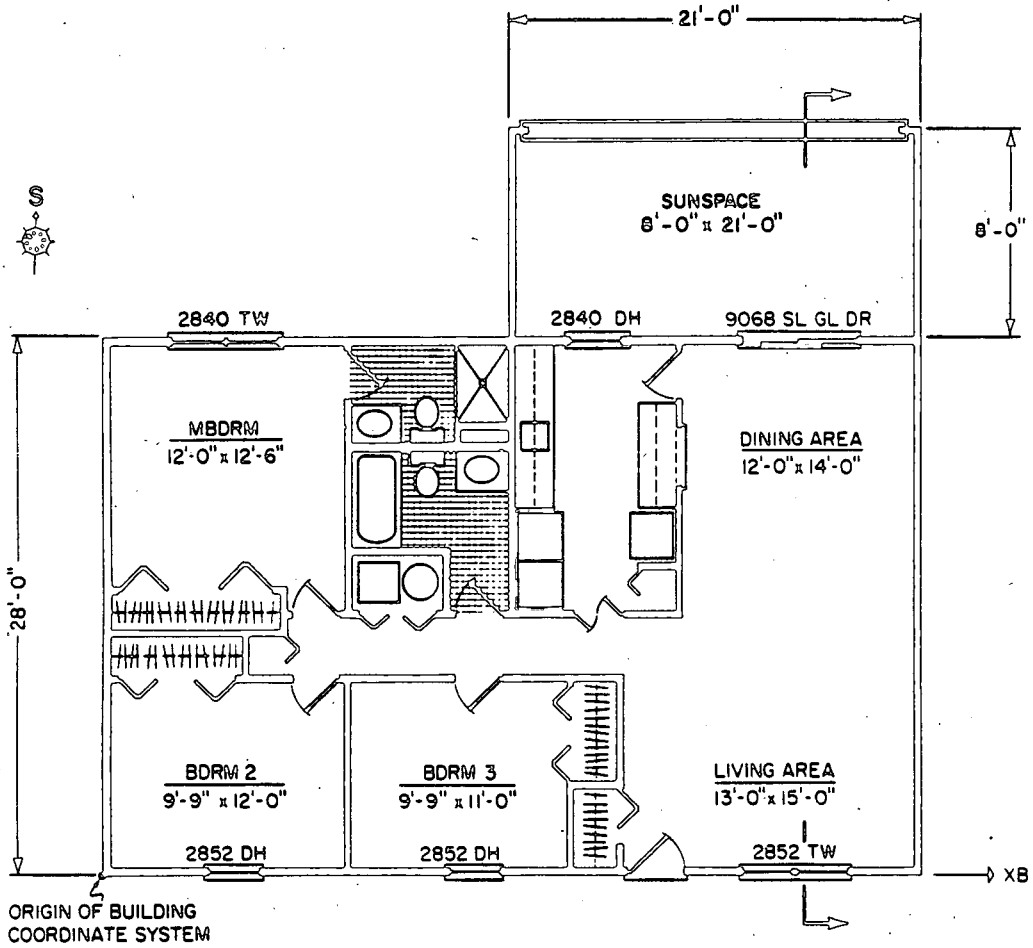

XBL803-6675A

XBL803-6671A

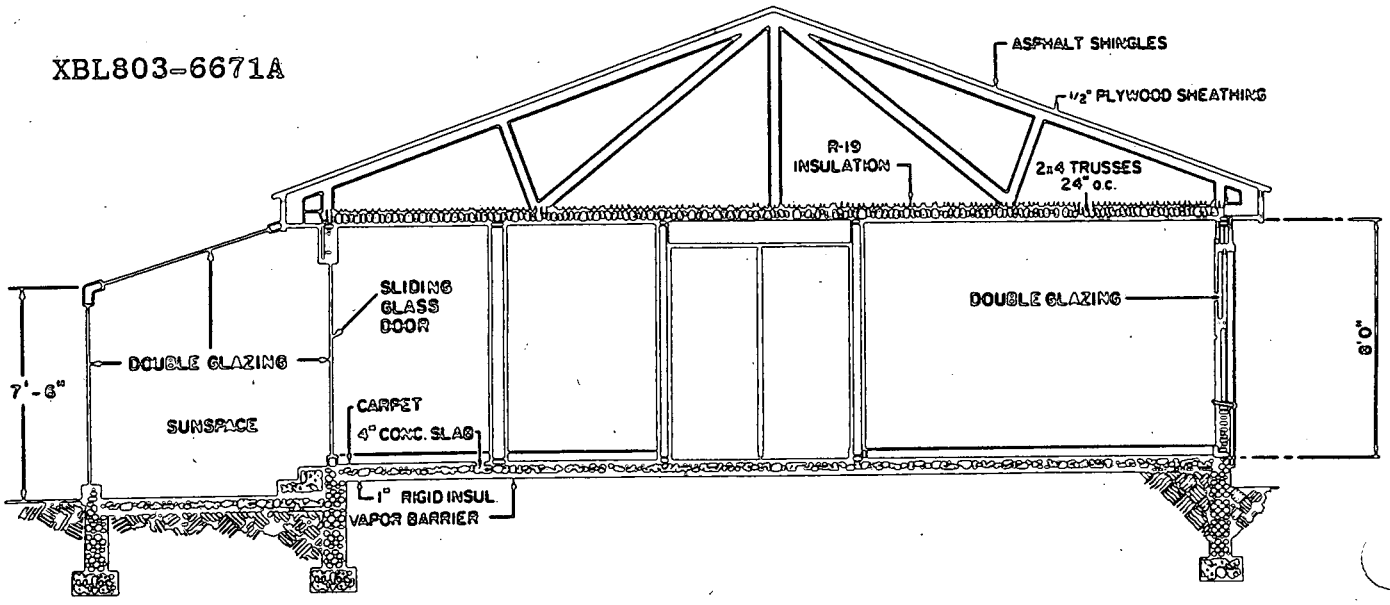

Sunspace Example

DrawBDL axonometric view of surfaces as input into BDL. In this analysis, the attic is not modeled as a separate zone. Instead, the combination of roof, airspace, and insulated ceiling is treated as two tilted exterior wall sections that are constrained to have a total area equal to the ceiling area (1176 sq.ft.). Because of this area constraint, the roof sections in the drawing do not meet. The triangular gable ends and the section between the top of the sunspace and the main roof have been neglected. The house is modeled as two zones — the main part of the house and the sunspace.

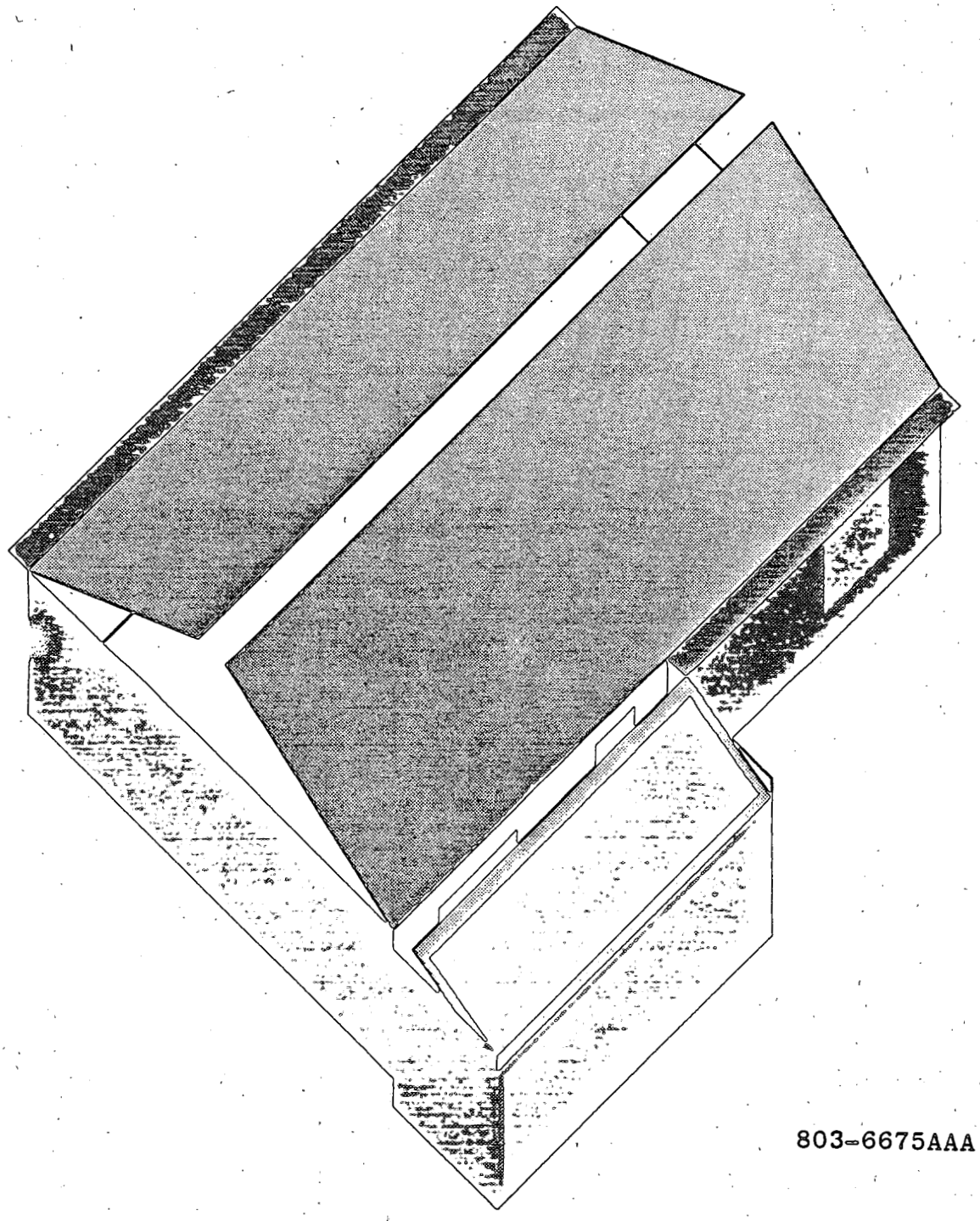

803-6675AAA

```
*   2 * TITLE     LINE-1 *SINGLE FAMILY RESIDENCE *
*   3 *           LINE-2 *===WITH ATTACHED SUNSPACE===* ..
*   4 *
*   5 * $  A SUNSPACE HAS BEEN ADDED TO THE SINGLE-FAMILY
*   6 * $  RESIDENCE, RUN 1.  THE HOUSE HAS BEEN ROTATED SO THAT THE
*   7 * $  THE BACK OF THE HOUSE, TO WHICH THE SUNSPACE IS ATTACHED,
*   8 * $  FACES SOUTH.  THE SUNSPACE IS 21 FEET WIDE AND 8 FEET DEEP.
*   9 * $  ITS FRONT WALL AND SLOPING ROOF ARE DOUBLE GLAZED.
*  10 * $  TO CONTROL SOLAR RADIATION IN THE SUMMER, MOVABLE SHADES ARE
*  11 * $  DEPLOYED FROM MID-MAY TO MID-SEPTEMBER WHEN TRANSMITTED
*  12 * $  DIRECT SOLAR GAIN EXCEEDS 20 BTUH PER SQFT OF GLASS.
*  13 * $  THE INTERIOR WALL SEPARATING THE SUNSPACE FROM THE MAIN HOUSE HAS
*  14 * $  THE SAME CONSTRUCTION AS THE EXTERIOR WALLS OF THE HOUSE.
*  15 * $  THIS INTERIOR WALL HAS A DOUBLE-GLAZED WINDOW AND SLIDING GLASS DOOR.
*  16 * $  AIR IS CIRCULATED BY A FAN FROM SUNSPACE TO HOUSE AT 200 CFM FROM
*  17 * $  MID-SEPTEMBER TO MID-MAY IF THE SUNSPACE AIR TEMPERATURE EXCEEDS THE
*  18 * $  HOUSE AIR TEMPERATURE BY 4F OR MORE.  TO CONTROL OVERHEATING, THE
*  19 * $  SUNSPACE IS VENTED WITH OUTSIDE AIR DURING THE DAY AT 20 ACH
*  20 * $  IF THE SUNSPACE TEMPERATURE EXCEEDS 90F DURING THE WINTER
*  21 * $  OR 80F DURING THE SUMMER.
*  22 * $
*  23 * $                                        21
*  24 * $                                  *-----------------*
*  25 * $                                  *                 *
*  26 * $                                8 *    SUNSPACE     *
*  27 * $                                  *                 *
*  28 * $                                  *                 *
*  29 * $                  ***-----*************---******-----***
*  30 * $                  *                                 *
*  31 * $                  *                                 *
*  32 * $                  *                                 *
*  33 * $                  *                                 *
*  34 * $                  *                                 *
*  35 * $                  *              HOUSE              * 28
*  36 * $                  *                                 *
*  37 * $                  *                                 *
*  38 * $                  *                                 *
*  39 * $                  *                                 *
*  40 * $                  *                                 *
*  41 * $                  ***---****---****************-----****
*  42 * $                                  42
*  43 * $
*  44 * $                     PLAN OF RANCH-STYLE HOUSE WITH
*  45 * $                          ATTACHED SUNSPACE
*  46 * $
*  47 * $
*  48 * $  NOTE THAT THE LOADS INPUT RESULTS IN THE CAUTION MESSAGE --
*  49 * $    SUNSPACE INTERIOR WALL SSINTWAL HAS X=0, Y=0 AND THEREFORE MAY NOT
*  50 * $    BE CORRECTLY POSITIONED.  THIS MAY CAUSE AN INACCURATE CALCULATION
*  51 * $    OF SOLAR RADIATION ABSORBED BY THE WALL.
*  52 * $  THIS IS SIMPLY A REMINDER THAT THE USER MAY HAVE NEGLECTED TO
*  53 * $  GEOMETRICALLY LOCATE THE INTERIOR WALL OF THE SUNSPACE, IN WHICH
*  54 * $  CASE X AND Y WOULD DEFAULT TO ZERO.  SINCE THE WALL IN THIS EXAMPLE
*  55 * $  HAS BEEN INTENTIONALLY LOCATED AT X=0 AND Y=0, THIS MESSAGE CAN BE
*  56 * $  IGNORED.  (IN DOE-2.1B AND EARLIER VERSIONS OF THE PROGRAM, THE
*  57 * $  X, Y, Z, AND AZIMUTH KEYWORDS FOR INTERIOR WALLS WERE NOT USED.)
*  58 * $
```

```
* 59 * $  SUNSPACE-RELATED INPUT IS INDICATED BY A DOUBLE DOLLAR SIGN.
* 60 * $
* 61 * $  (TO SIMPLIFY THE INPUT, THE EXTERIOR SURFACES IN THIS EXAMPLE HAVE
* 62 * $  NOT BEEN DIVIDED INTO SEPARATE STUD AND INSULATED PORTIONS AS WAS
* 63 * $  DONE IN SINGLE FAMILY RESIDENCE RUN 1.  INSTEAD, THE ENTIRE OPAQUE
* 64 * $  AREA OF THE EXTERIOR WALLS AND ROOFS IS ASSUMED TO BE INSULATED.)
* 65 *
* 66 *
* 67 *                          $ -----HEADING----- $
* 68 *
* 69 *          DIAGNOSTIC          CAUTIONS ..
* 70 *          ABORT               ERRORS ..
* 71 *          RUN-PERIOD          JAN 1 1974 THRU DEC 31 1974 ..
* 72 *          BUILDING-LOCATION   LAT=42  LON=88  T-Z=6  ALT=610  AZ=180  ..
* 73 *          LOADS-REPORT        SUMMARY=(LS-B,LS-D,LS-E)
* 74 *                              VERIFICATION=(LV-D,LV-F,LV-H,LV-I,LV-J) ..
* 75 *
* 76 *                          $ -----SCHEDULES----- $
* 77 *
* 78 * SCH-1     =DAY-SCHEDULE       (1,5) (.1) (6,9) (.17,.22,.44,.26)
* 79 *                              (10,11) (.16) (12,14) (.20,.15,.13)
* 80 *                              (15,16) (.13) (17,19) (.19,.21,.23)
* 81 *                              (20,24) (.37) ..
* 82 * INT-LDS-1 =SCHEDULE          THRU DEC 31 (ALL) SCH-1 ..
* 83 *
* 84 * MAXSOL-1  =SCHEDULE          THRU MAY 15 (ALL)(1,24)(1000.)          $$
* 85 *                              THRU SEP 15 (ALL)(1,24)(20.)            $$
* 86 *                              THRU DEC 31 (ALL)(1,24)(1000.)  ..      $$
* 87 *
* 88 * SOLTRN-1  =SCHEDULE          THRU DEC 31 (ALL)(1,24)(0.15)  ..       $$
* 89 * SHSCH-1   =SCHEDULE          THRU DEC 31 (ALL)(1,24)(0.20)  ..       $$
* 90 *
* 91 *                          $ -----MATERIALS----- $
* 92 *
* 93 * DRYWALL-1 =MAT      TH=.0417 COND=.0925 DENS=50  S-H=.26 $1/2 IN DRYWALL$ ..
* 94 * WALL-INS-1=MAT      TH=.2618 COND=.0238 DENS=6   S-H=.2  $R11 INSULATION$ ..
* 95 * SHEATH-1  =MAT      TH=.0417 COND=.0342 DENS=22  S-H=.31 $1/2-IN SHEATHING$ ..
* 96 * AL-SIDE-1 =MAT      TH=.0104 COND=.0171 DENS=170 S-H=.29 $ALUM SIDING$ ..
* 97 * AS-SHG-1  =MAT      TH=.0208 COND=.0473 DENS=70  S-H=.30 $ASPHALT SHINGLES$ ..
* 98 * PLYW-1    =MAT      TH=.0417 COND=.0667 DENS=34  S-H=.29 $1/2-IN PLYWOOD$ ..
* 99 * CEIL-INS-1=MAT      TH=.4522 COND=.0238 DENS=6   S-H=.2  $R19 INSULATION$ ..
* 100 * AT-AIR-1  =MAT      RES=3.1                              $ATTIC AIR SPACE$ ..
* 101 * EXP-POLY-1=MAT      TH=.0833 COND=.0167 DENS=2.2 S-H=.29 $1-IN POLYSTYRENE$ ..
* 102 * CONCRETE-1=MAT      TH=.3333 COND=.7576 DENS=140 S-H=.2  $4-IN CONCRETE$ ..
* 103 * CARP/PAD-1=MAT      RES=2.08                             $CARPET AND PAD$ ..
* 104 *
* 105 *                          $ -----GLAZING----- $
* 106 *
* 107 * GT-WIN-1  =GLASS-TYPE         P=2  S-C=.83 ..
* 108 * GTSS-1    =GLASS-TYPE         P=2  GLASS-TYPE-CODE=1 ..                $$
* 109 *
* 110 *                          $ -----CONSTRUCTIONS----- $
* 111 *
* 112 * LAY-1     =LAYERS             MAT=(AL-SIDE-1,SHEATH-1,WALL-INS-1,DRYWALL-1) ..
* 113 * INS-WL-1  =CONS               LAYERS=LAY-1  ..
* 114 * LAY-3     =LAYERS             MAT=(AS-SHG-1,PLYW-1,AT-AIR-1,CEIL-INS-1,
* 115 *                                   DRYWALL-1)  I-F-R=.61 ..
* 116 * INS-RF-1  =CONS               LAYERS=LAY-3  ABS=.86 ..
* 117 * LAY-5     =LAYERS             MAT=(EXP-POLY-1,CONCRETE-1,CARP/PAD-1)
* 118 *                                   I-F-R=0.92 ..
* 119 * SLAB-1    =CONS               LAYERS=LAY-5 ..
* 120 * LAY-6     =LAYERS             MAT=(EXP-POLY-1,CONCRETE-1)              $$
* 121 *                                   I-F-R=0.92 ..                       $$
* 122 * SLAB-SS   =CONS               LAYERS=LAY-6 ..                         $$
* 123 * DR-1      =CONS               U=.629  ABS=.78  ..
```

```
* 124 *
* 125 *          $ -----WALL PARAMETERS FOR SUNSPACE INTERIOR WALL----- $
* 126 *
* 127 * SSIWPAR   =WALL-PARAMETERS    FOR INTERIOR-WALL                    $$
* 128 *                              AIR-FLOW-TYPE=FORCED-RECIRC          $$
* 129 *                              AIR-FLOW-CTRL-DT=4                   $$
* 130 *                              AIR-FLOW-RATE=200                    $$
* 131 *                              FAN-KW=0.00005                       $$
* 132 *                                ..
* 133 *
* 134 * CONSSIW   =CONS              LAYERS=LAY-1                         $$
* 135 *                              WALL-PARAMETERS=SSIWPAR ..           $$
* 136 *
* 137 *                       $ -----BUILDING SHADE----- $
* 138 *
* 139 *          BUILDING-SHADE      X=0  Y=0  Z=8  H=1.5  W=42
* 140 *                              AZ=180  TILT=180 ..
* 141 *
* 142 *          BUILDING-SHADE      X=0  Y=28  Z=8  H=1.5  W=21
* 143 *                              AZ=180  TILT=0 ..
* 144 *
* 145 *                       $ -----SPACE DESCRIPTION----- $
* 146 *
* 147 *
* 148 * HOUSE-1   =SPACE              A=1176  V=9408
* 149 *                              SOURCE-SCHEDULE=INT-LDS-1
* 150 *                              SOURCE-TYPE=ELECTRIC  SOURCE-BTU/HR=10252
* 151 *                              FLOOR-WEIGHT=0
* 152 *                              INF-METHOD=RESIDENTIAL ..
* 153 *
* 154 * FRONT-WL-1=EXTERIOR-WALL      H=8  W=42  AZ=180  CONS=INS-WL-1 ..
* 155 * WIN-1       =WINDOW           H=5.17  W=10.68  G-T=GT-WIN-1  X=7  Y=2   ..
* 156 * DOOR-1      =DOOR             H=6.67  W=3  CONS=DR-1  X=26 ..
* 157 *
* 158 *
* 159 * RIGHT-WL-1=EXTERIOR-WALL      H=8  W=28  AZ=90  X=42  Y=0  CONS=INS-WL-1 ..
* 160 *
* 161 *
* 162 * REAR-WL-1 =EXTERIOR-WALL      LIKE FRONT-WL-1  W=21  X=21  Y=28  AZ=0 ..
* 163 * WIN-3      =WINDOW            H=4  W=5  X=12 Y=2  G-T=GT-WIN-1   ..
* 164 *
* 165 *
* 166 * LEFT-WL-1 =EXTERIOR-WALL      LIKE RIGHT-WL-1  X=0   Y=28  AZ=270 ..
* 167 *
* 168 * FRONT-RF-1=ROOF               H=14  W=42  Z=8  AZ=180  TILT=22.62
* 169 *                              CONS=INS-RF-1 ..
* 170 *
* 171 * REAR-RF-1 =ROOF               LIKE FRONT-RF-1  X=42  Y=28  AZ=0 ..
* 172 *
* 173 * UF-1      =UNDERGROUND-FLOOR  CONS=SLAB-1  A=1176
* 174 *                              U-EFFECTIVE=.014 $ =(PERIM AREA/TOTAL AREA) X $
* 175 *                                               $ OVERALL U = (140/1176)X.12 $
* 176 *                                     ..
* 177 *
* 178 * SUNSP-1   =SPACE              SUNSPACE=YES                         $$
* 179 *                              AREA=168  VOLUME=1428                $$
* 180 *                              X=21 Y=28  AZIMUTH=0                 $$
* 181 *                              FLOOR-WEIGHT=0                       $$
* 182 *                              INF-METHOD=RESIDENTIAL   ..          $$
* 183 *
* 184 * SSLEFT    =EXTERIOR-WALL      H=8.5  W=8  X=0  Y=8  AZ=270  Z=-1.5  $$
* 185 *                              CONS=INS-WL-1  ..                    $$
* 186 *
* 187 * SSRIGHT   =EXTERIOR-WALL      H=8.5  W=8  X=21  Y=0  AZ=90  Z=-1.5  $$
* 188 *                              CONS=INS-WL-1  ..                    $$
```

```
* 189 *
* 190 * SSFRONT    =EXTERIOR-WALL      H=7.5  W=21  X=21  Y=8  AZ=0  Z=-1.5    $$
* 191 *                              CONS=INS-WL-1  ..                        $$
* 192 *
* 193 * SSFRONTWIN  =WINDOW           H=6.5  W=20  X=.5  Y=.5                  $$
* 194 *                              GLASS-TYPE=GTSS-1                        $$
* 195 *                              MAX-SOLAR-SCH=MAXSOL-1                   $$
* 196 *                              SHADING-SCHEDULE=SHSCH-1                 $$
* 197 *                              SOL-TRANS-SCH=SOLTRN-1   ..              $$
* 198 *
* 199 * SSROOF     =ROOF               H=6.8  W=21  X=21  Y=8  Z=6              $$
* 200 *                              AZ=0  TILT=17                            $$
* 201 *                              CONS=INS-WL-1  ..                        $$
* 202 *
* 203 * SSROOFWIN   =WINDOW           LIKE SSFRONTWIN  H=5.5  ..               $$
* 204 *
* 205 * SSINTWAL  =INTERIOR-WALL      H=8  W=21  X=0  Y=0  AZ=180              $$
* 206 *                              CONS=CONSSIW  NEXT-TO HOUSE-1  ..        $$
* 207 *
* 208 * SSINTWIN-1  =WINDOW           H=6.67  W=6  X=11.5  Y=0                 $$
* 209 *                              GLASS-TYPE=GTSS-1  ..                    $$
* 210 *
* 211 * SSINTWIN-2  =WINDOW           LIKE SSINTWIN-1  H=4  W=3  X=2.5  Y=3    $$
* 212 *                                  ..
* 213 * SSFLOOR    =UNDERGROUND-FLOOR  AREA=168  CONS=SLAB-SS                   $$
* 214 *                              U-EFFECTIVE=.055  ..                     $$
* 215 *
* 216 *              $ -----HOURLY REPORTS----- $
* 217 *
* 218 * HR-SCH-1  =SCHEDULE           THRU JAN 24 (ALL)(1,24)(0)
* 219 *                              THRU JAN 25 (ALL)(1,24)(1)
* 220 *                              THRU JUL  5 (ALL)(1,24)(0)
* 221 *                              THRU JUL  6 (ALL)(1,24)(1)
* 222 *                              THRU DEC 31 (ALL)(1,24)(0) ..
* 223 *
* 224 * OUT-1      =REPORT-BLOCK      VARIABLE-TYPE=GLOBAL
* 225 *                              VARIABLE-LIST=(4,3,2,16,6,21,22,50,51) ..
* 226 * OUT-2      =REPORT-BLOCK      V-T=HOUSE-1
* 227 *                              V-L=(19,20,18,14,33,22,37,39,41,42) ..
* 228 * OUT-3      =REPORT-BLOCK      LIKE OUT-2  V-T=SUNSP-1 ..
* 229 * OUT-4      =REPORT-BLOCK      V-T=SSFRONTWIN
* 230 *                              V-L=(1,2,10,11,12,13,14,15,16,17,19,20,23) ..
* 231 * LDS-REP-1 =HOURLY-REPORT      REPORT-SCHEDULE=HR-SCH-1
* 232 *                              REPORT-BLOCK=(OUT-1,OUT-2,OUT-3,OUT-4) ..
* 233 * END ..
-CAUTION-----------------------------------------------------------------------------
        ALL DIAGNOSTICS FOR THE WEIGHTING-FACTOR
        CALCULATION SECTION ARE GIVEN IN ENGLISH UNITS
* 234 * COMPUTE LOADS ..
* 235 * INPUT SYSTEMS ..
```

```
* 236 *
* 237 *          SYSTEMS-REPORT      SUMMARY=(SS-A,SS-B,SS-C,SS-F,SS-H,SS-O)
* 238 *                                                  ..
* 239 *
* 240 *                    $ -----SCHEDULES----- $
* 241 *
* 242 * HEAT-1     =SCHEDULE          THRU DEC 31 (ALL)(1,8)(55)(9,22)(70)
* 243 *                                             (23,24)(55) ..
* 244 *
* 245 * COOL-1     =SCHEDULE          THRU DEC 31 (ALL)(1,24) (78) ..
* 246 *
* 247 * HOUSEVENT-1=SCHEDULE          THRU DEC 31 (ALL)(1,8)(0)(9,22)(1)
* 248 *                                             (23,24)(0) ..
* 249 *
* 250 * HOUSEVTEMP-1=SCHEDULE         THRU DEC 31 (ALL)(1,24) (75) ..
* 251 *
* 252 * SSVENT-1  =SCHEDULE           THRU DEC 31 (ALL)(1,8)(0)(9,22)(1)      $$
* 253 *                                             (23,24)(0)  ..          $$
* 254 *
* 255 * SSVENTEMP-1=SCHEDULE          THRU MAY 15 (ALL)(1,24)(90)             $$
* 256 *                               THRU SEP 15 (ALL)(1,24)(80)             $$
* 257 *                               THRU DEC 31 (ALL)(1,24)(90)  ..         $$
* 258 *
* 259 * SSFLOWSCH-1=SCHEDULE          THRU MAY 15 (ALL)(1,24)(1)              $$
* 260 *                               THRU SEP 15 (ALL)(1,24)(0)              $$
* 261 *                               THRU DEC 31 (ALL)(1,24)(1)   ..         $$
* 262 *
* 263 *                          $ -----ZONE DATA----- $
* 264 *
* 265 * HOUSE-1    =ZONE               DESIGN-HEAT-T=70  DESIGN-COOL-T=78
* 266 *                               ZONE-TYPE=CONDITIONED
* 267 *                               ASSIGNED-CFM=700
* 268 *                               THERMOSTAT-TYPE=TWO-POSITION
* 269 *                               HEAT-TEMP-SCH=HEAT-1
* 270 *                               COOL-TEMP-SCH=COOL-1   ..
* 271 *
* 272 * SUNSP-1       =ZONE            DESIGN-HEAT-T=70  DESIGN-COOL-T=78      $$
* 273 *                               ZONE-TYPE=UNCONDITIONED                 $$
* 274 *                               SS-FLOW-SCH=SSFLOWSCH-1                 $$
* 275 *                               SS-VENT-SCH=SSVENT-1                    $$
* 276 *                               SS-VENT-T-SCH=SSVENTEMP-1               $$
* 277 *                               SS-VENT-CST=20                          $$
* 278 *                               SS-VENT-KW=.00004      ..               $$
* 279 *
* 280 *
* 281 *          $ -----AIR CONDITIONER AND GAS FURNACE PARAMETERS----- $
* 282 *
* 283 * SYS-1      =SYSTEM             SYSTEM-TYPE=RESYS
* 284 *                               ZONE-NAMES=(HOUSE-1,SUNSP-1)            $$
* 285 *                               MAX-SUPPLY-T=140  MIN-SUPPLY-T=50
* 286 *                               COOLING-CAPACITY=24000  COOLING-EIR=.427
* 287 *                               COOL-SH-CAP=16000
* 288 *                               HEATING-CAPACITY=-50000
* 289 *                               HEAT-SOURCE=FURNACE FURNACE-AUX=100
* 290 *                               NATURAL-VENT-AC=10
* 291 *                               NATURAL-VENT-SCH=HOUSEVENT-1
* 292 *                               VENT-TEMP-SCH=HOUSEVTEMP-1 ..
```

```
* 293 *
* 294 * PLANT-1    =PLANT-ASSIGNMENT    SYSTEM-NAMES=(SYS-1) ..
* 295 *
* 296 *                          $ -----HOURLY REPORTS----- $
* 297 *
* 298 * HR-SCH-1   =SCHEDULE            THRU JAN 24 (ALL) (1,24) (0.)
* 299 *                                 THRU JAN 25 (ALL) (1,24) (1.)
* 300 *                                 THRU JUL  5 (ALL) (1,24) (0.)
* 301 *                                 THRU JUL  6 (ALL) (1,24) (1.)
* 302 *                                 THRU DEC 31 (ALL) (1,24) (0.)  ..
* 303 *
* 304 * OUT-1      =R-B                 V-T=GLOBAL  V-L=(8) ..
* 305 * OUT-2      =R-B                 V-T=HOUSE-1 V-L=(6,21,7,8,61) ..
* 306 * OUT-3      =R-B                 V-T=SUNSP-1 V-L=(6,21,8,61,64) ..
* 307 * OUT-4      =R-B                 V-T=HOUSE-1 V-L=(1,17,18,62,56,57,58,59,60) ..
* 308 * OUT-5      =R-B                 V-T=SUNSP-1 V-L=(1,17,18,62,58,59,60,63) ..
* 309 * OUT-6      =R-B                 V-T=SYS-1   V-L=(2,3,5,6,32,33,49,45,47,48,61,
* 310 *                                                 62,63,64,66,67,68,70,71) ..
* 311 * OUT-7      =R-B                 V-T=PLANT-1
* 312 *                                 V-L=(1,2,3) ..
* 313 *
* 314 * SYS-REP-1=H-R          R-SCH=HR-SCH-1  R-B=(OUT-1,OUT-2,OUT-3,OUT-4,OUT-5) ..
* 315 * SYS-REP-2=H-R          R-SCH=HR-SCH-1  R-B=(OUT-6,OUT-7)  ..
* 316 *
* 317 * END ..
* 318 * COMPUTE SYSTEMS ..
* 319 * STOP ..
```

REPORT- LV-D DETAILS OF EXTERIOR SURFACES IN THE PROJECT WEATHER FILE- TRY CHICAGO

NUMBER OF EXTERIOR SURFACES 10 RECTANGULAR 10 OTHER 0
(U-VALUE INCLUDES OUTSIDE AIR FILM; WINDOW INCLUDES FRAME, IF DEFINED)

SURFACE	SPACE	WINDOWS U-VALUE (BTU/HR-SQFT-F)	WINDOWS AREA (SQFT)	WALL U-VALUE (BTU/HR-SQFT-F)	WALL AREA (SQFT)	WALL+WINDOWS U-VALUE (BTU/HR-SQFT-F)	WALL+WINDOWS AREA (SQFT)	AZIMUTH
FRONT-WL-1	HOUSE-1	0.467	55.22	0.070	280.78	0.135	336.00	NORTH
LEFT-WL-1	HOUSE-1	0.000	0.00	0.070	224.00	0.070	224.00	EAST
SSLEFT	SUNSP-1	0.000	0.00	0.070	68.00	0.070	68.00	EAST
REAR-WL-1	HOUSE-1	0.467	20.00	0.070	148.00	0.117	168.00	SOUTH
SSFRONT	SUNSP-1	0.467	130.00	0.070	27.50	0.397	157.50	SOUTH
SSRIGHT	SUNSP-1	0.000	0.00	0.070	68.00	0.070	68.00	WEST
RIGHT-WL-1	HOUSE-1	0.000	0.00	0.070	224.00	0.070	224.00	WEST
REAR-RF-1	HOUSE-1	0.000	0.00	0.041	588.00	0.041	588.00	ROOF
FRONT-RF-1	HOUSE-1	0.000	0.00	0.041	588.00	0.041	588.00	ROOF
SSROOF	SUNSP-1	0.467	110.00	0.070	32.80	0.376	142.80	ROOF
UF-1	HOUSE-1	0.000	0.00	0.119	1176.00	0.119	1176.00	UNDERGRND
SSFLOOR	SUNSP-1	0.000	0.00	0.158	168.00	0.158	168.00	UNDERGRND

REPORT- LV-D DETAILS OF EXTERIOR SURFACES IN THE PROJECT WEATHER FILE- TRY CHICAGO (CONTINUED)

	AVERAGE U-VALUE/WINDOWS (BTU/HR-SQFT-F)	AVERAGE U-VALUE/WALLS (BTU/HR-SQFT-F)	AVERAGE U-VALUE WALLS+WINDOWS (BTU/HR-SQFT-F)	WINDOW AREA (SQFT)	WALL AREA (SQFT)	WINDOW+WALL AREA (SQFT)
NORTH	0.467	0.070	0.135	55.22	280.78	336.00
EAST	0.000	0.070	0.070	0.00	292.00	292.00
SOUTH	0.467	0.070	0.253	150.00	175.50	325.50
WEST	0.000	0.070	0.070	0.00	292.00	292.00
ROOF	0.467	0.041	0.077	110.00	1208.80	1318.80
ALL WALLS	0.467	0.070	0.135	205.22	1040.28	1245.50
WALLS+ROOFS	0.467	0.054	0.105	315.22	2249.08	2564.30
UNDERGRND	0.000	0.124	0.124	0.00	1344.00	1344.00
BUILDING	0.467	0.080	0.111	315.22	3593.08	3908.30

NUMBER OF INTERIOR SURFACES 1
(U-VALUE INCLUDES BOTH AIR FILMS)

SURFACE NAME	AREA (SQFT)	CONSTRUCTION NAME	SURFACE TYPE	U-VALUE (BTU/HR-SQFT-F)	ADJACENT SPACES SPACE-1	SPACE-2
SSINTWAL	168.00	CONSSIW	DELAYED STANDARD	0.072	SUNSP-1	HOUSE-1

NUMBER OF WINDOWS 6 RECTANGULAR 6 OTHER 0

RECTANGULAR WINDOWS (U-VALUES INCLUDE OUTSIDE AIR FILM)

WINDOW NAME	MULTIPLIER	GLASS AREA (SQFT)	GLASS HEIGHT (FT)	GLASS WIDTH (FT)	LOCATION OF ORIGIN IN SURFACE COORDINATES X (FT)	Y (FT)	FRAME AREA (SQFT)	FRAME U-VALUE (BTU/HR-SQFT-F)
WIN-1	1.0	55.22	5.17	10.68	7.00	2.00	0.00	0.384
WIN-3	1.0	20.00	4.00	5.00	12.00	2.00	0.00	0.384
SSFRONTWIN	1.0	130.00	6.50	20.00	0.50	0.50	0.00	0.384
SSROOFWIN	1.0	110.00	5.50	20.00	0.50	0.50	0.00	0.384
SSINTWIN-1	1.0	40.02	6.67	6.00	11.50	0.00	0.00	0.384
SSINTWIN-2	1.0	12.00	4.00	3.00	2.50	3.00	0.00	0.384

WINDOW NAME	SETBACK (FT)	X-DIVISIONS	GLASS SHADING COEFF	NUMBER OF PANES	GLASS TYPE CODE	INFILTRATION FLOW COEFF	CENTER-OF-GLASS U-VALUE (BTU/HR-SQFT-F)	GLASS VISIBLE TRANS
WIN-1	0.00	10	0.83	2	1	0.0	0.490	0.900
WIN-3	0.00	10	0.83	2	1	0.0	0.490	0.900
SSFRONTWIN	0.00	10	1.00	2	1	0.0	0.490	0.900
SSROOFWIN	0.00	10	1.00	2	1	0.0	0.490	0.900
SSINTWIN-1	0.00	10	1.00	2	1	0.0	0.490	0.900
SSINTWIN-2	0.00	10	1.00	2	1	0.0	0.490	0.900

REPORT- LV-I DETAILS OF CONSTRUCTIONS OCCURRING IN THE PROJECT WEATHER FILE- TRY CHICAGO

NUMBER OF CONSTRUCTIONS 6 DELAYED 5 QUICK 1

CONSTRUCTION NAME	U-VALUE (BTU/HR-SQFT-F)	SURFACE ABSORPTANCE	SURFACE ROUGHNESS INDEX	SURFACE TYPE	NUMBER OF RESPONSE FACTORS
INS-WL-1	0.072	0.70	3	DELAYED	8
INS-RF-1	0.041	0.86	3	DELAYED	8
SLAB-1	0.119	0.70	3	DELAYED	6
SLAB-SS	0.158	0.70	3	DELAYED	6
DR-1	0.629	0.78	3	QUICK	0
CONSSIW	0.072	0.70	3	DELAYED	8

NUMBER OF BUILDING SHADES 2 RECTANGULAR 2 OTHER 0

RECTANGULAR SHADES

SHADE NAME	TRANSMITTANCE	HEIGHT (FT)	WIDTH (FT)	AZIMUTH (DEG)	TILT (DEG)	LOCATION OF ORIGIN BUILDING COORDINATES XB (FT)	YB (FT)	ZB (FT)
	0.00	1.5	42.0	180.	180.	0.0	0.0	8.0
	0.00	1.5	21.0	180.	0.	0.0	28.0	8.0

SPACE HOUSE-1

MULTIPLIER 1.0 FLOOR MULTIPLIER 1.0

FLOOR AREA 1176 SQFT 109 M2
VOLUME 9408 CUFT 266 M3

	COOLING LOAD		HEATING LOAD	
TIME	JUL 13 6PM		JAN 12 7AM	
DRY-BULB TEMP	99F	37C	-6F	-21C
WET-BULB TEMP	77F	25C	-7F	-22C

	SENSIBLE (KBTU/H)	SENSIBLE (KW)	LATENT (KBTU/H)	LATENT (KW)	SENSIBLE (KBTU/H)	SENSIBLE (KW)
WALL CONDUCTION	2.047	0.600	0.000	0.000	-3.859	-1.131
ROOF CONDUCTION	3.253	0.953	0.000	0.000	-3.129	-0.917
WINDOW GLASS+FRM COND	0.796	0.233	0.000	0.000	-2.205	-0.646
WINDOW GLASS SOLAR	2.027	0.594	0.000	0.000	0.171	0.050
DOOR CONDUCTION	0.321	0.094	0.000	0.000	-0.665	-0.195
INTERNAL SURFACE COND	0.000	0.000	0.000	0.000	0.000	0.000
UNDERGROUND SURF COND	-0.087	-0.026	0.000	0.000	-0.437	-0.128
OCCUPANTS TO SPACE	0.000	0.000	0.000	0.000	0.000	0.000
LIGHT TO SPACE	0.000	0.000	0.000	0.000	0.000	0.000
EQUIPMENT TO SPACE	0.000	0.000	0.000	0.000	0.000	0.000
PROCESS TO SPACE	1.796	0.526	0.000	0.000	1.829	0.536
INFILTRATION	3.171	0.929	2.862	0.839	-12.565	-3.682
TOTAL	13.325	3.904	2.862	0.839	-20.860	-6.112
TOTAL LOAD	16.187 KBTU/H		4.743 KW		-20.860 KBTU/H	-6.112 KW
TOTAL LOAD / AREA	13.76BTU/H.SQFT		43.411 W / M2		17.738BTU/H.SQFT	55.944 W / M2

```
*****************************************************************
*                                                               *
*  NOTE  1)THE ABOVE LOADS EXCLUDE OUTSIDE VENTILATION AIR      *
*  ----     LOADS                                               *
*        2)TIMES GIVEN IN STANDARD TIME FOR THE LOCATION        *
*          IN CONSIDERATION                                     *
*                                                               *
*****************************************************************
```

SPACE SUNSP-1

MULTIPLIER 1.0 FLOOR MULTIPLIER 1.0

FLOOR AREA 168 SQFT 16 M2
VOLUME 1428 CUFT 40 M3

	COOLING LOAD		HEATING LOAD	
TIME	SEP 26 3PM		JAN 12 7AM	
DRY-BULB TEMP	81F	27C	-6F	-21C
WET-BULB TEMP	62F	17C	-7F	-22C

	SENSIBLE (KBTU/H)	SENSIBLE (KW)	LATENT (KBTU/H)	LATENT (KW)	SENSIBLE (KBTU/H)	SENSIBLE (KW)
WALL CONDUCTION	0.153	0.045	0.000	0.000	-0.644	-0.189
ROOF CONDUCTION	0.066	0.019	0.000	0.000	-0.137	-0.040
WINDOW GLASS+FRM COND	1.830	0.536	0.000	0.000	-6.378	-1.869
WINDOW GLASS SOLAR	13.529	3.964	0.000	0.000	0.478	0.140
DOOR CONDUCTION	0.000	0.000	0.000	0.000	0.000	0.000
INTERNAL SURFACE COND	0.000	0.000	0.000	0.000	0.000	0.000
UNDERGROUND SURF COND	-0.043	-0.013	0.000	0.000	-0.216	-0.063
OCCUPANTS TO SPACE	0.000	0.000	0.000	0.000	0.000	0.000
LIGHT TO SPACE	0.000	0.000	0.000	0.000	0.000	0.000
EQUIPMENT TO SPACE	0.000	0.000	0.000	0.000	0.000	0.000
PROCESS TO SPACE	0.000	0.000	0.000	0.000	0.000	0.000
INFILTRATION	0.167	0.049	0.000	0.000	-1.910	-0.560
TOTAL	15.703	4.601	0.000	0.000	-8.806	-2.580
TOTAL LOAD	15.703 KBTU/H		4.601 KW		-8.806 KBTU/H	-2.580 KW
TOTAL LOAD / AREA	93.47BTU/H.SQFT		294.783 W / M2		52.417BTU/H.SQFT	165.315 W / M2

```
*************************************************************
*                                                           *
*  NOTE  1)THE ABOVE LOADS EXCLUDE OUTSIDE VENTILATION AIR  *
*  ----     LOADS                                           *
*        2)TIMES GIVEN IN STANDARD TIME FOR THE LOCATION    *
*          IN CONSIDERATION                                 *
*                                                           *
*************************************************************
```

REPORT- LS-D BUILDING MONTHLY LOADS SUMMARY WEATHER FILE- TRY CHICAGO

	COOLING						HEATING						ELEC	
MONTH	COOLING ENERGY (MBTU)	TIME OF MAX DY	TIME OF MAX HR	DRY-BULB TEMP	WET-BULB TEMP	MAXIMUM COOLING LOAD (KBTU/HR)	HEATING ENERGY (MBTU)	TIME OF MAX DY	TIME OF MAX HR	DRY-BULB TEMP	WET-BULB TEMP	MAXIMUM HEATING LOAD (KBTU/HR)	ELEC-TRICAL ENERGY (KWH)	MAXIMUM ELEC LOAD (KW)
JAN	0.24593	25	14	46.F	41.F	11.013	-9.321	12	7	-6.F	-7.F	-29.666	478.	1.322
FEB	0.40769	28	14	53.F	42.F	14.304	-7.600	4	6	7.F	6.F	-24.794	431.	1.322
MAR	0.68412	7	13	52.F	45.F	15.121	-4.963	24	5	9.F	8.F	-24.603	478.	1.322
APR	2.74543	26	14	76.F	60.F	22.524	-1.951	9	5	26.F	25.F	-13.900	462.	1.322
MAY	3.03801	1	14	59.F	49.F	17.811	-0.948	7	4	34.F	29.F	-9.866	478.	1.322
JUN	4.26877	4	14	84.F	67.F	20.190	-0.278	25	4	53.F	47.F	-4.875	462.	1.322
JUL	6.00847	13	17	99.F	77.F	19.806	-0.032	6	4	60.F	54.F	-2.054	478.	1.322
AUG	5.28856	20	14	89.F	73.F	21.674	-0.059	5	5	55.F	54.F	-2.691	478.	1.322
SEP	3.49293	26	14	81.F	62.F	25.791	-0.703	22	5	35.F	31.F	-9.492	462.	1.322
OCT	2.50061	10	14	66.F	53.F	21.365	-1.683	21	4	31.F	30.F	-12.787	478.	1.322
NOV	0.85150	2	12	72.F	60.F	21.135	-4.713	15	3	26.F	25.F	-16.566	462.	1.322
DEC	0.13931	10	14	40.F	35.F	9.873	-7.934	26	5	14.F	14.F	-21.264	478.	1.322
TOTAL	29.671						-40.184						5625.	
MAX						25.791						-29.666		1.322

SINGLE FAMILY RESIDENCE ===WITH ATTACHED SUNSPACE=== DOE-2.1E-001 Thu Nov 11 10:51:11 1993LDL RUN 1

REPORT- LS-E SPACE MONTHLY LOAD COMPONENTS IN MBTU FOR HOUSE-1 WEATHER FILE- TRY CHICAGO

(UNITS=MBTU)		WALLS	ROOFS	INT SUR	UND SUR	INFIL	WIN CON	WIN SOL	OCCUP	LIGHTS	EQUIP	SOURCE	TOTAL
JAN	HEATNG	-1.930	-1.376	0.000	-0.319	-4.072	-0.958	0.702	0.000	0.000	0.000	1.413	-6.541
	SEN CL	-0.017	-0.013	0.000	-0.006	-0.042	-0.012	0.090	0.000	0.000	0.000	0.019	0.020
	LAT CL					0.000			0.000		0.000	0.000	0.000
FEB	HEATNG	-1.615	-1.094	0.000	-0.311	-3.493	-0.843	0.689	0.000	0.000	0.000	1.257	-5.411
	SEN CL	-0.028	-0.018	0.000	-0.012	-0.072	-0.022	0.165	0.000	0.000	0.000	0.037	0.048
	LAT CL					0.000			0.000		0.000	0.000	0.000
MAR	HEATNG	-1.270	-0.776	0.000	-0.308	-2.632	-0.701	0.804	0.000	0.000	0.000	1.320	-3.564
	SEN CL	-0.023	-0.001	0.000	-0.028	-0.078	-0.028	0.191	0.000	0.000	0.000	0.112	0.146
	LAT CL					0.016			0.000		0.000	0.000	0.016
APR	HEATNG	-0.568	-0.343	0.000	-0.144	-1.093	-0.317	0.329	0.000	0.000	0.000	0.716	-1.420
	SEN CL	-0.032	0.140	0.000	-0.129	-0.268	-0.108	0.835	0.000	0.000	0.000	0.671	1.110
	LAT CL					0.066			0.000		0.000	0.000	0.066
MAY	HEATNG	-0.314	-0.202	0.000	-0.075	-0.517	-0.173	0.160	0.000	0.000	0.000	0.466	-0.655
	SEN CL	0.004	0.258	0.000	-0.131	-0.360	-0.142	0.987	0.000	0.000	0.000	0.966	1.582
	LAT CL					0.180			0.000		0.000	0.000	0.180
JUN	HEATNG	-0.088	-0.059	0.000	-0.019	-0.119	-0.049	0.040	0.000	0.000	0.000	0.145	-0.150
	SEN CL	0.254	0.489	0.000	-0.107	-0.035	-0.040	0.997	0.000	0.000	0.000	1.241	2.800
	LAT CL					0.389			0.000		0.000	0.000	0.389
JUL	HEATNG	-0.011	-0.008	0.000	-0.002	-0.012	-0.006	0.006	0.000	0.000	0.000	0.025	-0.007
	SEN CL	0.614	0.803	0.000	-0.063	0.367	0.094	0.964	0.000	0.000	0.000	1.407	4.185
	LAT CL					0.805			0.000		0.000	0.000	0.805
AUG	HEATNG	-0.021	-0.016	0.000	-0.002	-0.025	-0.012	0.009	0.000	0.000	0.000	0.046	-0.021
	SEN CL	0.423	0.578	0.000	-0.041	0.158	0.027	0.978	0.000	0.000	0.000	1.386	3.509
	LAT CL					0.665			0.000		0.000	0.000	0.665
SEP	HEATNG	-0.239	-0.170	0.000	-0.021	-0.371	-0.133	0.100	0.000	0.000	0.000	0.393	-0.440
	SEN CL	0.086	0.237	0.000	-0.042	-0.152	-0.083	0.858	0.000	0.000	0.000	0.993	1.897
	LAT CL					0.182			0.000		0.000	0.000	0.182
OCT	HEATNG	-0.529	-0.366	0.000	-0.062	-0.895	-0.284	0.249	0.000	0.000	0.000	0.730	-1.156
	SEN CL	-0.079	0.000	0.000	-0.057	-0.239	-0.107	0.820	0.000	0.000	0.000	0.701	1.040
	LAT CL					0.093			0.000		0.000	0.000	0.093
NOV	HEATNG	-1.166	-0.802	0.000	-0.166	-2.163	-0.608	0.473	0.000	0.000	0.000	1.226	-3.206
	SEN CL	-0.028	-0.017	0.000	-0.022	-0.093	-0.037	0.317	0.000	0.000	0.000	0.160	0.279
	LAT CL					0.012			0.000		0.000	0.000	0.012
DEC	HEATNG	-1.694	-1.187	0.000	-0.269	-3.271	-0.853	0.498	0.000	0.000	0.000	1.423	-5.351
	SEN CL	-0.008	-0.007	0.000	-0.002	-0.019	-0.006	0.044	0.000	0.000	0.000	0.009	0.010
	LAT CL					0.000			0.000		0.000	0.000	0.000
TOT	HEATNG	-9.444	-6.398	0.000	-1.697	-18.663	-4.939	4.058	0.000	0.000	0.000	9.161	-27.922
	SEN CL	1.167	2.449	0.000	-0.641	-0.832	-0.463	7.245	0.000	0.000	0.000	7.702	16.627
	LAT CL					2.407			0.000		0.000	0.000	2.407

SINGLE FAMILY RESIDENCE ===WITH ATTACHED SUNSPACE=== DOE-2.1E-001 Thu Nov 11 10:51:11 1993LDL RUN 1

REPORT- LS-E SPACE MONTHLY LOAD COMPONENTS IN MBTU FOR SUNSP-1 WEATHER FILE- TRY CHICAGO

(UNITS=MBTU)		WALLS	ROOFS	INT SUR	UND SUR	INFIL	WIN CON	WIN SOL	OCCUP	LIGHTS	EQUIP	SOURCE	TOTAL
	HEATNG	-0.259	-0.055	0.000	-0.145	-0.566	-2.530	0.774	0.000	0.000	0.000	0.000	-2.780
JAN	SEN CL	-0.018	-0.003	0.000	-0.016	-0.060	-0.198	0.520	0.000	0.000	0.000	0.000	0.226
	LAT CL					0.000			0.000		0.000	0.000	0.000
	HEATNG	-0.211	-0.045	0.000	-0.137	-0.485	-2.169	0.857	0.000	0.000	0.000	0.000	-2.190
FEB	SEN CL	-0.018	-0.002	0.000	-0.023	-0.057	-0.214	0.673	0.000	0.000	0.000	0.000	0.359
	LAT CL					0.000			0.000		0.000	0.000	0.000
	HEATNG	-0.152	-0.031	0.000	-0.124	-0.326	-1.617	0.850	0.000	0.000	0.000	0.000	-1.398
MAR	SEN CL	-0.027	-0.003	0.000	-0.042	-0.087	-0.341	1.039	0.000	0.000	0.000	0.000	0.539
	LAT CL					0.002			0.000		0.000	0.000	0.002
	HEATNG	-0.067	-0.015	0.000	-0.057	-0.133	-0.737	0.477	0.000	0.000	0.000	0.000	-0.531
APR	SEN CL	-0.009	0.003	0.000	-0.078	-0.075	-0.311	2.105	0.000	0.000	0.000	0.000	1.635
	LAT CL					0.011			0.000		0.000	0.000	0.011
	HEATNG	-0.042	-0.010	0.000	-0.037	-0.073	-0.489	0.357	0.000	0.000	0.000	0.000	-0.293
MAY	SEN CL	0.006	0.007	0.000	-0.065	-0.060	-0.287	1.855	0.000	0.000	0.000	0.000	1.456
	LAT CL					0.028			0.000		0.000	0.000	0.028
	HEATNG	-0.015	-0.004	0.000	-0.014	-0.025	-0.220	0.150	0.000	0.000	0.000	0.000	-0.128
JUN	SEN CL	0.049	0.017	0.000	-0.048	0.001	0.003	1.447	0.000	0.000	0.000	0.000	1.469
	LAT CL					0.059			0.000		0.000	0.000	0.059
	HEATNG	-0.003	-0.001	0.000	-0.003	-0.004	-0.060	0.046	0.000	0.000	0.000	0.000	-0.025
JUL	SEN CL	0.104	0.029	0.000	-0.029	0.058	0.301	1.360	0.000	0.000	0.000	0.000	1.823
	LAT CL					0.119			0.000		0.000	0.000	0.119
	HEATNG	-0.005	-0.002	0.000	-0.002	-0.007	-0.084	0.063	0.000	0.000	0.000	0.000	-0.038
AUG	SEN CL	0.075	0.022	0.000	-0.019	0.028	0.163	1.511	0.000	0.000	0.000	0.000	1.779
	LAT CL					0.099			0.000		0.000	0.000	0.099
	HEATNG	-0.031	-0.008	0.000	-0.011	-0.054	-0.406	0.247	0.000	0.000	0.000	0.000	-0.262
SEP	SEN CL	0.024	0.009	0.000	-0.020	-0.025	-0.142	1.751	0.000	0.000	0.000	0.000	1.596
	LAT CL					0.028			0.000		0.000	0.000	0.028
	HEATNG	-0.066	-0.015	0.000	-0.027	-0.117	-0.729	0.428	0.000	0.000	0.000	0.000	-0.527
OCT	SEN CL	-0.011	0.000	0.000	-0.031	-0.055	-0.270	1.829	0.000	0.000	0.000	0.000	1.461
	LAT CL					0.012			0.000		0.000	0.000	0.012
	HEATNG	-0.153	-0.032	0.000	-0.075	-0.300	-1.592	0.644	0.000	0.000	0.000	0.000	-1.507
NOV	SEN CL	-0.012	-0.002	0.000	-0.018	-0.043	-0.183	0.830	0.000	0.000	0.000	0.000	0.572
	LAT CL					0.001			0.000		0.000	0.000	0.001
	HEATNG	-0.231	-0.048	0.000	-0.125	-0.470	-2.316	0.608	0.000	0.000	0.000	0.000	-2.583
DEC	SEN CL	-0.011	-0.002	0.000	-0.009	-0.030	-0.119	0.300	0.000	0.000	0.000	0.000	0.130
	LAT CL					0.000			0.000		0.000	0.000	0.000
	HEATNG	-1.234	-0.266	0.000	-0.755	-2.560	-12.949	5.502	0.000	0.000	0.000	0.000	-12.262
TOT	SEN CL	0.152	0.076	0.000	-0.399	-0.406	-1.599	15.220	0.000	0.000	0.000	0.000	13.044
	LAT CL					0.357			0.000		0.000	0.000	0.357

MMDDHH	GLOBAL DRY BULB TEMP F	GLOBAL WET BULB TEMP F	GLOBAL GROUND ABS TEMP R	GLOBAL CLOUD TYPE	GLOBAL CLOUD AMOUNT	GLOBAL DIR SOL X CLDCOV BTU/HR-SQFT	GLOBAL DIF SOL X CLDCOV BTU/HR-SQFT	GLOBAL SOLAR ALTITUDE DEGREES	GLOBAL SOLAR AZIMUTH DEGREES	HOUSE-1 DELAY WL LOAD BTU/HR	HOUSE-1 DELAY RF LOAD BTU/HR
	----(4)	----(3)	----(2)	----(16)	----(6)	----(21)	----(22)	----(50)	----(51)	----(19)	----(20)
125 1	30.0	29.0	500.0	2.	0.0	0.0	0.0	0.0	0.0	-2086.59	-1803.34
125 2	31.0	30.0	500.0	2.	0.0	0.0	0.0	0.0	0.0	-2143.76	-1885.85
125 3	32.0	31.0	500.0	2.	0.0	0.0	0.0	0.0	0.0	-2166.11	-1945.97
125 4	33.0	32.0	500.0	2.	4.0	0.0	0.0	0.0	0.0	-2156.04	-1974.92
125 5	33.0	31.0	500.0	2.	2.0	0.0	0.0	0.0	0.0	-2124.23	-1974.43
125 6	32.0	30.0	500.0	2.	1.0	0.0	0.0	0.0	0.0	-2095.68	-1954.19
125 7	33.0	31.0	500.0	2.	1.0	0.0	0.0	0.0	0.0	-2090.22	-1931.60
125 8	32.0	30.0	500.0	2.	0.0	40.5	2.4	3.5	119.8	-2082.13	-1915.93
125 9	33.0	30.0	500.0	2.	0.0	191.0	11.3	11.4	129.2	-2000.66	-1903.04
12510	36.0	33.0	500.0	2.	0.0	249.5	14.7	19.2	141.4	-1689.28	-1852.19
12511	39.0	35.0	500.0	2.	0.0	274.4	16.2	25.1	155.4	-1300.14	-1680.38
12512	43.0	38.0	500.0	2.	0.0	284.3	16.8	28.3	170.8	-1014.74	-1390.60
12513	45.0	40.0	500.0	0.	1.0	256.4	5.8	28.6	186.9	-842.40	-1030.82
12514	46.0	41.0	500.0	0.	2.0	221.2	17.6	25.7	202.6	-781.68	-680.13
12515	47.0	42.0	500.0	0.	2.0	203.5	15.4	20.2	216.7	-708.67	-435.76
12516	48.0	42.0	500.0	0.	3.0	142.2	15.6	12.6	229.2	-620.48	-308.12
12517	48.0	42.0	500.0	0.	0.0	61.4	3.6	4.2	239.4	-602.95	-300.42
12518	44.0	40.0	500.0	0.	0.0	0.0	0.0	0.0	0.0	-731.30	-398.78
12519	41.0	38.0	500.0	2.	0.0	0.0	0.0	0.0	0.0	-990.78	-587.25
12520	38.0	36.0	500.0	2.	0.0	0.0	0.0	0.0	0.0	-1261.13	-821.57
12521	37.0	35.0	500.0	2.	0.0	0.0	0.0	0.0	0.0	-1480.85	-1046.02
12522	36.0	34.0	500.0	2.	0.0	0.0	0.0	0.0	0.0	-1640.26	-1237.35
12523	35.0	33.0	500.0	2.	0.0	0.0	0.0	0.0	0.0	-1747.96	-1390.42
12524	35.0	33.0	500.0	2.	0.0	0.0	0.0	0.0	0.0	-1825.53	-1505.65
DAILY SUMMARY (JAN 25)											
MN	30.0	29.0	500.0	0.	0.0	0.0	0.0	0.0	0.0	-2166.11	-1974.92
MX	48.0	42.0	500.0	2.	4.0	284.3	17.6	28.6	239.4	-602.95	-300.42
SM	907.0	836.0	12000.0	36.	16.0	1924.4	119.4	178.9	1791.5	-36183.58	-31954.74
AV	37.8	34.8	500.0	2.	0.7	80.2	5.0	7.5	74.6	-1507.65	-1331.45
MONTHLY SUMMARY (JAN)											
MN	30.0	29.0	500.0	0.	0.0	0.0	0.0	0.0	0.0	-2166.11	-1974.92
MX	48.0	42.0	500.0	2.	4.0	284.3	17.6	28.6	239.4	-602.95	-300.42
SM	907.0	836.0	12000.0	36.	16.0	1924.4	119.4	178.9	1791.5	-36183.58	-31954.74
AV	37.8	34.8	500.0	2.	0.7	80.2	5.0	7.5	74.6	-1507.65	-1331.45

	GLOBAL DRY BULB TEMP F ----(4)	GLOBAL WET BULB TEMP F ----(3)	GLOBAL GROUND ABS TEMP R ----(2)	GLOBAL CLOUD TYPE ----(16)	GLOBAL CLOUD AMOUNT ----(6)	GLOBAL DIR SOL X CLDCOV BTU/HR-SQFT ----(21)	GLOBAL DIF SOL X CLDCOV BTU/HR-SQFT ----(22)	GLOBAL SOLAR ALTITUDE DEGREES ----(50)	GLOBAL SOLAR AZIMUTH DEGREES ----(51)	HOUSE-1 DELAY WL LOAD BTU/HR ----(19)	HOUSE-1 DELAY RF LOAD BTU/HR ----(20)
7 6 1	62.0	54.0	524.0	0.	2.0	0.0	0.0	0.0	0.0	-328.91	-88.24
7 6 2	62.0	54.0	524.0	0.	0.0	0.0	0.0	0.0	0.0	-428.26	-278.25
7 6 3	61.0	54.0	524.0	0.	0.0	0.0	0.0	0.0	0.0	-508.39	-445.38
7 6 4	60.0	54.0	524.0	2.	0.0	0.0	0.0	0.0	0.0	-573.74	-596.92
7 6 5	61.0	55.0	524.0	2.	0.0	6.0	0.9	2.7	61.2	-612.44	-714.97
7 6 6	61.0	55.0	524.0	2.	0.0	111.2	15.9	10.5	68.6	-592.03	-785.45
7 6 7	64.0	58.0	524.0	0.	0.0	189.6	27.2	21.1	77.7	-249.61	-794.49
7 6 8	69.0	61.0	524.0	0.	0.0	228.2	32.7	32.2	87.0	331.98	-611.76
7 6 9	73.0	62.0	524.0	0.	0.0	249.0	35.7	43.3	97.4	779.31	-159.97
7 610	76.0	64.0	524.0	0.	0.0	260.8	37.4	54.1	110.6	1007.47	437.24
7 611	78.0	64.0	524.0	0.	1.0	240.6	62.5	63.7	130.0	1167.23	1072.09
7 612	79.0	65.0	524.0	0.	1.0	243.2	64.4	70.1	162.0	1294.76	1725.84
7 613	80.0	66.0	524.0	0.	0.0	270.1	38.7	69.6	202.8	1337.28	2335.61
7 614	80.0	65.0	524.0	0.	2.0	213.4	85.3	62.7	232.9	1295.69	2799.47
7 615	81.0	66.0	524.0	0.	3.0	181.8	99.2	52.8	251.3	1336.90	3054.30
7 616	81.0	66.0	524.0	0.	3.0	172.9	50.3	41.9	263.9	1446.97	3162.21
7 617	81.0	67.0	524.0	0.	2.0	179.8	30.6	30.8	274.2	1487.89	3099.70
7 618	81.0	66.0	524.0	0.	3.0	127.8	29.5	19.8	283.4	1474.81	2864.57
7 619	78.0	64.0	524.0	0.	3.0	67.5	13.4	9.2	292.6	1423.57	2524.41
7 620	75.0	63.0	524.0	0.	1.0	2.4	0.3	2.0	299.4	1236.35	2107.30
7 621	72.0	61.0	524.0	0.	1.0	0.0	0.0	0.0	0.0	888.69	1630.23
7 622	71.0	61.0	524.0	0.	1.0	0.0	0.0	0.0	0.0	534.58	1153.92
7 623	71.0	61.0	524.0	0.	0.0	0.0	0.0	0.0	0.0	282.71	744.13
7 624	69.0	61.0	524.0	0.	0.0	0.0	0.0	0.0	0.0	134.95	432.61
DAILY SUMMARY (JUL 6)											
MN	60.0	54.0	524.0	0.	0.0	0.0	0.0	0.0	0.0	-612.44	-794.49
MX	81.0	67.0	524.0	2.	3.0	270.1	99.2	70.1	299.4	1487.89	3162.21
SM	1726.0	1467.0	12576.0	6.	23.0	2744.3	623.8	586.5	2895.1	14167.76	24668.21
AV	71.9	61.1	524.0	0.	1.0	114.3	26.0	24.4	120.6	590.32	1027.84
MONTHLY SUMMARY (JUL)											
MN	60.0	54.0	524.0	0.	0.0	0.0	0.0	0.0	0.0	-612.44	-794.49
MX	81.0	67.0	524.0	2.	3.0	270.1	99.2	70.1	299.4	1487.89	3162.21
SM	1726.0	1467.0	12576.0	6.	23.0	2744.3	623.8	586.5	2895.1	14167.76	24668.21
AV	71.9	61.1	524.0	0.	1.0	114.3	26.0	24.4	120.6	590.32	1027.84
YEARLY SUMMARY											
MN	30.0	29.0	500.0	0.	0.0	0.0	0.0	0.0	0.0	-2166.11	-1974.92
MX	81.0	67.0	524.0	2.	4.0	284.3	99.2	70.1	299.4	1487.89	3162.21
SM	2633.0	2303.0	24576.0	42.	39.0	4668.7	743.3	765.3	4686.6	-22015.82	-7286.53
AV	54.9	48.0	512.0	1.	0.8	97.3	15.5	15.9	97.6	-458.66	-151.80

MMDDHH	HOUSE-1 GLS COND LOAD BTU/HR	HOUSE-1 GLS SOL GAIN BTU/HR	HOUSE-1 GLS SOL LOAD BTU/HR	HOUSE-1 UG FLOOR LOAD BTU/HR	HOUSE-1 INFILTRN SENS GN BTU/HR	HOUSE-1 INFILTRN FLOWRT CFM	HOUSE-1 SPACE CONDUCT BTU/HR-F	HOUSE-1 SPACE SENS LD BTU/HR
	----(18)	----(14)	----(33)	----(22)	----(37)	----(39)	----(41)	----(42)
125 1	-1177.53	0.00	421.94	-436.97	-4257.98	102.28	144.05	-8169.36
125 2	-1175.04	0.00	400.84	-436.97	-4200.38	103.48	145.07	-8548.12
125 3	-1167.06	0.00	381.23	-436.97	-4140.27	104.69	145.95	-8700.28
125 4	-1123.94	0.00	362.77	-436.97	-3883.53	100.85	145.09	-8481.25
125 5	-1133.00	0.00	345.28	-436.97	-3980.59	103.37	146.01	-8604.19
125 6	-1164.94	0.00	328.67	-436.97	-4239.95	107.21	146.74	-8454.43
125 7	-1149.79	0.00	312.88	-436.97	-4077.65	105.89	146.71	-7886.12
125 8	-1139.75	857.85	647.83	-436.97	-3940.90	99.65	144.10	-5924.48
125 9	-1119.10	5537.00	2653.02	-436.97	-3980.59	103.37	146.00	-4672.45
12510	-1068.45	9614.49	4956.71	-436.97	-3785.59	106.98	147.97	-2430.35
12511	-997.98	12779.73	7063.50	-436.97	-3405.40	105.55	148.52	582.06
12512	-892.80	14105.46	8394.13	-436.97	-2747.12	97.76	148.09	3480.49
12513	-842.48	12070.73	8118.02	-436.97	-2606.25	100.17	149.07	3633.32
12514	-799.76	10566.80	7528.45	-436.97	-2406.14	96.33	148.66	3547.65
12515	-778.22	7562.24	6157.56	-436.97	-2395.03	100.05	149.50	2482.97
12516	-752.71	3626.65	4132.90	-436.97	-2203.03	96.22	149.12	871.82
12517	-767.48	973.80	2380.11	-436.97	-2203.03	96.22	149.13	-529.82
12518	-832.14	0.00	1352.32	-436.97	-2336.92	86.36	145.50	-1829.18
12519	-910.54	0.00	943.74	-436.97	-2877.97	95.35	146.95	-3161.59
12520	-989.95	0.00	751.76	-436.97	-3391.23	101.83	147.51	-3562.91
12521	-1013.69	0.00	653.06	-436.97	-3369.31	98.10	146.11	-3946.19
12522	-1054.66	0.00	594.99	-436.97	-3696.40	104.46	147.46	-4658.31
12523	-1077.43	0.00	555.01	-436.97	-3761.28	103.26	146.80	-5014.68
12524	-1076.90	0.00	523.49	-436.97	-3669.47	100.74	146.03	-5123.64
DAILY SUMMARY (JAN 25)								
MN	-1177.53	0.00	312.88	-436.97	-4257.98	86.36	144.05	-8700.28
MX	-752.71	14105.46	8394.13	-436.97	-2203.03	107.21	149.50	3633.32
SM	-24205.36	77694.75	59960.18	-10487.38	-81556.02	2420.15	3526.14	-85099.05
AV	-1008.56	3237.28	2498.34	-436.97	-3398.17	100.84	146.92	-3545.79
MONTHLY SUMMARY (JAN)								
MN	-1177.53	0.00	312.88	-436.97	-4257.98	86.36	144.05	-8700.28
MX	-752.71	14105.46	8394.13	-436.97	-2203.03	107.21	149.50	3633.32
SM	-24205.36	77694.75	59960.18	-10487.38	-81556.02	2420.15	3526.14	-85099.05
AV	-1008.56	3237.28	2498.34	-436.97	-3398.17	100.84	146.92	-3545.79

	HOUSE-1 GLS COND LOAD BTU/HR	HOUSE-1 GLS SOL GAIN BTU/HR	HOUSE-1 GLS SOL LOAD BTU/HR	HOUSE-1 UG FLOOR LOAD BTU/HR	HOUSE-1 INFILTRN SENS GN BTU/HR	HOUSE-1 INFILTRN FLOWRT CFM	HOUSE-1 SPACE CONDUCT BTU/HR-F	HOUSE-1 SPACE SENS LD BTU/HR
	----(18)	----(14)	----(33)	----(22)	----(37)	----(39)	----(41)	----(42)
7 6 1	-296.65	0.00	277.80	-87.40	-415.31	50.05	136.98	223.71
7 6 2	-317.21	0.00	260.72	-87.40	-415.31	50.05	136.88	-230.79
7 6 3	-338.33	0.00	246.61	-87.40	-479.52	51.37	136.27	-640.12
7 6 4	-357.30	0.00	234.09	-87.39	-624.89	60.25	143.63	-1068.70
7 6 5	-344.18	176.39	294.52	-87.39	-479.52	51.37	137.19	-569.89
7 6 6	-306.81	2338.42	1188.48	-87.39	-479.52	51.37	136.86	893.16
7 6 7	-253.59	2205.47	1413.05	-87.39	-295.09	47.42	138.58	3154.63
7 6 8	-152.35	2216.48	1524.26	-87.39	-52.99	50.91	145.27	3460.64
7 6 9	-43.71	2642.69	1749.15	-87.39	190.80	61.11	147.71	4257.12
7 610	34.47	2965.82	1961.55	-87.39	374.79	60.02	146.46	5452.06
7 611	107.42	3282.11	2172.18	-87.39	521.66	62.65	146.55	6903.53
7 612	148.28	3510.32	2347.57	-87.39	599.20	63.97	146.60	7698.59
7 613	192.09	3151.82	2273.62	-87.39	784.41	75.37	149.46	8316.25
7 614	207.52	3489.50	2404.45	-87.39	731.95	70.33	148.23	8814.86
7 615	243.35	4022.71	2668.97	-87.39	874.96	76.69	148.94	9550.63
7 616	247.24	2595.67	2183.12	-87.39	874.96	76.69	149.47	9615.20
7 617	241.61	1942.38	1783.42	-87.39	846.20	74.17	148.88	9325.43
7 618	250.87	2216.03	1756.92	-87.39	846.20	74.17	148.88	9264.43
7 619	190.03	1723.65	1532.21	-87.39	603.55	72.74	149.37	9222.33
7 620	89.03	68.60	784.45	-87.39	330.58	63.74	148.04	7569.98
7 621	-0.24	0.00	511.13	-87.39	113.58	54.75	146.28	6201.83
7 622	-37.94	0.00	389.27	-87.39	55.42	53.43	146.25	5175.88
7 623	-43.95	0.00	329.04	-87.39	63.27	60.99	148.61	4475.32
7 624	-98.86	0.00	295.51	-87.39	-55.42	53.43	146.19	2124.57
DAILY SUMMARY (JUL 6)								
MN	-357.30	0.00	234.09	-87.40	-624.89	47.42	136.27	-1068.70
MX	250.87	4022.71	2668.97	-87.39	874.96	76.69	149.47	9615.20
SM	-639.20	38548.06	30582.09	-2097.48	4513.93	1467.02	3477.60	119190.63
AV	-26.63	1606.17	1274.25	-87.39	188.08	61.13	144.90	4966.28
MONTHLY SUMMARY (JUL)								
MN	-357.30	0.00	234.09	-87.40	-624.89	47.42	136.27	-1068.70
MX	250.87	4022.71	2668.97	-87.39	874.96	76.69	149.47	9615.20
SM	-639.20	38548.06	30582.09	-2097.48	4513.93	1467.02	3477.60	119190.63
AV	-26.63	1606.17	1274.25	-87.39	188.08	61.13	144.90	4966.28
YEARLY SUMMARY								
MN	-1177.53	0.00	234.09	-436.97	-4257.98	47.42	136.27	-8700.28
MX	250.87	14105.46	8394.13	-87.39	874.96	107.21	149.50	9615.20
SM	-24844.56	116242.81	90542.28	-12584.86	-77042.09	3887.18	7003.74	34091.58
AV	-517.60	2421.73	1886.30	-262.18	-1605.04	80.98	145.91	710.24

MMDDHH	SUNSP-1 DELAY WL LOAD BTU/HR	SUNSP-1 DELAY RF LOAD BTU/HR	SUNSP-1 GLS COND LOAD BTU/HR	SUNSP-1 GLS SOL GAIN BTU/HR	SUNSP-1 GLS SOL LOAD BTU/HR	SUNSP-1 UG FLOOR LOAD BTU/HR	SUNSP-1 INFILTRN SENS GN BTU/HR	SUNSP-1 INFILTRN FLOWRT CFM
	----(19)	----(20)	----(18)	----(14)	----(33)	----(22)	----(37)	----(39)
125 1	-346.32	-80.59	-3542.85	0.00	1625.51	-215.74	-647.08	15.54
125 2	-356.06	-82.90	-3535.46	0.00	1478.88	-215.74	-638.50	15.73
125 3	-359.78	-83.38	-3515.17	0.00	1345.73	-215.74	-629.54	15.92
125 4	-358.17	-82.43	-3361.21	0.00	1224.65	-215.74	-590.36	15.33
125 5	-353.17	-80.72	-3409.55	0.00	1114.51	-215.74	-605.28	15.72
125 6	-349.03	-79.32	-3514.61	0.00	1014.29	-215.74	-644.86	16.31
125 7	-348.88	-78.89	-3471.15	0.00	923.08	-215.74	-620.19	16.11
125 8	-347.62	-78.63	-3360.15	1798.81	1163.35	-215.74	-598.91	15.14
125 9	-328.44	-77.35	-2708.00	12078.91	3081.14	-215.74	-605.28	15.72
12510	-257.90	-66.01	-2135.17	20613.19	5463.30	-215.74	-576.08	16.28
12511	-177.89	-45.73	-1650.25	25821.93	7563.28	-215.74	-518.40	16.07
12512	-129.45	-24.06	-1175.46	28003.69	9085.81	-215.74	-418.15	14.88
12513	-110.34	-4.36	-1213.21	23970.37	9286.38	-215.74	-396.93	15.26
12514	-111.20	5.04	-1178.77	22306.23	9332.75	-215.74	-366.38	14.67
12515	-100.32	6.37	-1311.10	18411.48	8855.83	-215.74	-364.87	15.24
12516	-80.25	1.72	-1573.73	11201.63	7509.87	-215.74	-335.56	14.66
12517	-74.91	-8.03	-2056.74	2960.48	5529.49	-215.74	-335.56	14.66
12518	-101.39	-21.89	-2489.34	0.00	4123.26	-215.74	-355.34	13.13
12519	-153.88	-36.93	-2730.93	0.00	3410.47	-215.74	-437.82	14.51
12520	-205.29	-48.60	-2960.44	0.00	2969.47	-215.74	-515.98	15.49
12521	-244.15	-56.47	-3039.22	0.00	2649.71	-215.74	-512.38	14.92
12522	-270.98	-62.05	-3150.93	0.00	2390.74	-215.74	-562.38	15.89
12523	-288.60	-65.64	-3223.78	0.00	2167.64	-215.74	-572.10	15.71
12524	-301.36	-68.25	-3233.57	0.00	1969.54	-215.74	-557.99	15.32
DAILY SUMMARY (JAN 25)								
MN	-359.78	-83.38	-3542.85	0.00	923.08	-215.74	-647.08	13.13
MX	-74.91	6.37	-1175.46	28003.69	9332.75	-215.74	-335.56	16.31
SM	-5755.40	-1219.09	-63540.79	167166.73	95278.68	-5177.77	-12405.93	368.18
AV	-239.81	-50.80	-2647.53	6965.28	3969.95	-215.74	-516.91	15.34
MONTHLY SUMMARY (JAN)								
MN	-359.78	-83.38	-3542.85	0.00	923.08	-215.74	-647.08	13.13
MX	-74.91	6.37	-1175.46	28003.69	9332.75	-215.74	-335.56	16.31
SM	-5755.40	-1219.09	-63540.79	167166.73	95278.68	-5177.77	-12405.93	368.18
AV	-239.81	-50.80	-2647.53	6965.28	3969.95	-215.74	-516.91	15.34

	SUNSP-1 DELAY WL LOAD BTU/HR	SUNSP-1 DELAY RF LOAD BTU/HR	SUNSP-1 GLS COND LOAD BTU/HR	SUNSP-1 GLS SOL GAIN BTU/HR	SUNSP-1 GLS SOL LOAD BTU/HR	SUNSP-1 UG FLOOR LOAD BTU/HR	SUNSP-1 INFILTRN SENS GN BTU/HR	SUNSP-1 INFILTRN FLOWRT CFM
	----(19)	----(20)	----(18)	----(14)	----(33)	----(22)	----(37)	----(39)
7 6 1	-46.13	-18.23	-1166.30	0.00	807.63	-43.15	-63.04	7.60
7 6 2	-63.31	-23.60	-1282.69	0.00	733.86	-43.15	-63.04	7.60
7 6 3	-77.54	-29.45	-1348.35	0.00	667.42	-43.15	-72.78	7.80
7 6 4	-89.33	-34.27	-1330.68	0.00	607.23	-43.15	-95.00	9.16
7 6 5	-96.34	-35.73	-1363.51	90.00	568.73	-43.15	-72.78	7.80
7 6 6	-93.07	-36.69	-1259.33	1614.13	800.23	-43.15	-72.78	7.80
7 6 7	-30.74	-33.05	-1062.61	2304.96	1006.92	-43.15	-44.79	7.20
7 6 8	74.88	-13.99	-584.50	3864.34	1375.69	-43.15	-8.06	7.75
7 6 9	157.51	15.27	-127.58	5701.72	1877.29	-43.15	29.06	9.31
7 610	203.16	43.53	232.31	8547.09	2637.00	-43.15	57.03	9.13
7 611	238.78	72.34	209.92	5258.86	2430.38	-43.15	79.37	9.53
7 612	262.89	99.11	315.83	5651.51	2477.84	-43.15	91.17	9.73
7 613	263.97	118.32	450.40	5550.35	2518.62	-43.15	119.50	11.48
7 614	250.56	122.41	486.38	5193.72	2508.17	-43.15	111.44	10.71
7 615	260.14	121.11	873.07	9044.29	3226.04	-43.15	133.29	11.68
7 616	284.62	114.65	713.63	5000.54	2847.21	-43.15	133.29	11.68
7 617	295.45	99.67	596.60	3226.13	2416.53	-43.15	128.87	11.29
7 618	295.84	82.11	679.52	4282.20	2431.75	-43.15	128.87	11.29
7 619	282.83	64.04	356.86	1273.43	1894.20	-43.15	91.96	11.08
7 620	238.53	44.73	5.44	32.77	1431.28	-43.15	50.35	9.71
7 621	167.01	27.13	-263.94	0.00	1189.09	-43.15	17.29	8.33
7 622	100.68	13.74	-359.27	0.00	1037.77	-43.15	8.44	8.13
7 623	56.64	4.96	-358.10	0.00	927.02	-43.15	9.64	9.30
7 624	31.83	0.21	-543.84	0.00	836.81	-43.15	-8.44	8.13
DAILY SUMMARY (JUL 6)								
MN	-96.34	-36.69	-1363.51	0.00	568.73	-43.15	-95.00	7.20
MX	295.84	122.41	873.07	9044.29	3226.04	-43.15	133.29	11.68
SM	2968.85	818.33	-6130.70	66636.04	39254.71	-1035.55	688.84	223.22
AV	123.70	34.10	-255.45	2776.50	1635.61	-43.15	28.70	9.30
MONTHLY SUMMARY (JUL)								
MN	-96.34	-36.69	-1363.51	0.00	568.73	-43.15	-95.00	7.20
MX	295.84	122.41	873.07	9044.29	3226.04	-43.15	133.29	11.68
SM	2968.85	818.33	-6130.70	66636.04	39254.71	-1035.55	688.84	223.22
AV	123.70	34.10	-255.45	2776.50	1635.61	-43.15	28.70	9.30
YEARLY SUMMARY								
MN	-359.78	-83.38	-3542.85	0.00	568.73	-215.74	-647.08	7.20
MX	295.84	122.41	873.07	28003.69	9332.75	-43.15	133.29	16.31
SM	-2786.54	-400.76	-69671.49	233802.78	134533.39	-6213.32	-11717.09	591.41
AV	-58.05	-8.35	-1451.49	4870.89	2802.78	-129.44	-244.11	12.32

MMDDHH	SUNSP-1 SPACE CONDUCT BTU/HR-F ----(41)	SUNSP-1 SPACE SENS LD BTU/HR ----(42)	SSFRONTW IN U-VALUE GLAS+FRM BTU/HR-SQFT-F ----(1)	SSFRONTW IN TMN COEF DIRECT ----(2)	SSFRONTW IN SHADED FRACTION FRAC.OR MULT. ----(10)	SSFRONTW IN DIRECT SOLAR BTU/HR-SQFT ----(11)	SSFRONTW IN DIFFUSE SOLAR BTU/HR-SQFT ----(12)	SSFRONTW IN SOL TRAN THRU GLS BTU/HR-SQFT ----(13)	SSFRONTW IN SOL ABS BY GLS BTU/HR-SQFT ----(14)	SSFRONTW IN SOL GAIN GLAS+FRM BTU/HR ----(15)	SSFRONTW IN SHADING COEFF ----(16)
125 1	93.83	-3207.07	0.408	0.000	0.000	0.0	0.0	0.0	0.0	0.0	1.000
125 2	95.87	-3349.78	0.419	0.000	0.000	0.0	0.0	0.0	0.0	0.0	1.000
125 3	97.72	-3457.89	0.429	0.000	0.000	0.0	0.0	0.0	0.0	0.0	1.000
125 4	95.86	-3383.26	0.419	0.000	0.000	0.0	0.0	0.0	0.0	0.0	1.000
125 5	97.90	-3549.96	0.429	0.000	0.000	0.0	0.0	0.0	0.0	0.0	1.000
125 6	99.46	-3789.27	0.437	0.000	0.000	0.0	0.0	0.0	0.0	0.0	1.000
125 7	99.36	-3811.76	0.437	0.000	0.000	0.0	0.0	0.0	0.0	0.0	1.000
125 8	93.88	-3437.70	0.408	0.652	0.000	20.1	5.1	16.6	1.3	2326.5	1.000
125 9	97.81	-853.67	0.429	0.722	0.000	118.3	23.6	101.5	6.9	14082.8	1.000
12510	102.19	2212.39	0.452	0.759	0.000	184.2	34.0	162.9	9.5	22422.7	1.000
12511	103.39	4955.27	0.458	0.769	0.000	225.9	39.6	200.6	11.1	27522.8	1.000
12512	102.37	7122.94	0.453	0.769	0.000	247.0	41.3	218.1	12.0	29909.1	1.000
12513	104.59	7345.81	0.464	0.769	0.000	223.5	22.8	187.4	9.9	25647.5	1.000
12514	103.63	7465.70	0.459	0.770	0.000	184.0	39.3	168.3	9.3	23084.5	1.000
12515	105.51	6870.17	0.469	0.762	0.000	153.1	33.8	139.6	7.7	19150.5	1.000
12516	104.63	5306.31	0.465	0.730	0.000	90.7	28.7	85.7	5.1	11812.0	1.000
12517	104.62	2838.51	0.465	0.659	0.000	31.2	7.5	25.6	1.7	3551.5	1.000
12518	96.64	939.56	0.423	0.000	0.000	0.0	0.0	0.0	0.0	0.0	1.000
12519	99.77	-164.83	0.439	0.000	0.000	0.0	0.0	0.0	0.0	0.0	1.000
12520	101.06	-976.59	0.446	0.000	0.000	0.0	0.0	0.0	0.0	0.0	1.000
12521	97.96	-1418.24	0.430	0.000	0.000	0.0	0.0	0.0	0.0	0.0	1.000
12522	100.94	-1871.34	0.445	0.000	0.000	0.0	0.0	0.0	0.0	0.0	1.000
12523	99.49	-2198.22	0.438	0.000	0.000	0.0	0.0	0.0	0.0	0.0	1.000
12524	97.83	-2407.38	0.429	0.000	0.000	0.0	0.0	0.0	0.0	0.0	1.000
DAILY SUMMARY (JAN 25)											
MN	93.83	-3811.76	0.408	0.000	0.000	0.0	0.0	0.0	0.0	0.0	1.000
MX	105.51	7465.70	0.469	0.770	0.000	247.0	41.3	218.1	12.0	29909.1	1.000
SM	2396.29	7179.70	10.553	7.361	0.000	1477.8	275.8	1306.4	74.4	179509.9	24.000
AV	99.85	299.15	0.440	0.307	0.000	61.6	11.5	54.4	3.1	7479.6	1.000
MONTHLY SUMMARY (JAN)											
MN	93.83	-3811.76	0.408	0.000	0.000	0.0	0.0	0.0	0.0	0.0	1.000
MX	105.51	7465.70	0.469	0.770	0.000	247.0	41.3	218.1	12.0	29909.1	1.000
SM	2396.29	7179.70	10.553	7.361	0.000	1477.8	275.8	1306.4	74.4	179509.9	24.000
AV	99.85	299.15	0.440	0.307	0.000	61.6	11.5	54.4	3.1	7479.6	1.000

	SUNSP-1 SPACE CONDUCT BTU/HR-F ----(41)	SUNSP-1 SPACE SENS LD BTU/HR ----(42)	SSFRONTW IN U-VALUE GLAS+FRM BTU/HR-SQFT-F ----(1)	SSFRONTW IN TMN COEF DIRECT ----(2)	SSFRONTW IN SHADED FRACTION FRAC.OR MULT. ----(10)	SSFRONTW IN DIRECT SOLAR BTU/HR-SQFT ----(11)	SSFRONTW IN DIFFUSE SOLAR BTU/HR-SQFT ----(12)	SSFRONTW IN SOL TRAN THRU GLS BTU/HR-SQFT ----(13)	SSFRONTW IN SOL ABS BY GLS BTU/HR-SQFT ----(14)	SSFRONTW IN SOL GAIN GLAS+FRM BTU/HR ----(15)	SSFRONTW IN SHADING COEFF ----(16)
7 6 1	83.65	-529.22	0.357	0.000	0.000	0.0	0.0	0.0	0.0	0.0	1.000
7 6 2	83.59	-741.93	0.356	0.000	0.000	0.0	0.0	0.0	0.0	0.0	1.000
7 6 3	83.27	-903.86	0.353	0.000	0.000	0.0	0.0	0.0	0.0	0.0	1.000
7 6 4	92.59	-985.19	0.402	0.000	0.000	0.0	0.0	0.0	0.0	0.0	1.000
7 6 5	83.74	-1042.78	0.358	0.000	0.000	0.0	0.8	0.6	0.0	77.5	1.000
7 6 6	83.54	-704.79	0.356	0.000	0.000	0.0	12.9	8.8	0.7	1233.2	1.000
7 6 7	84.78	-207.41	0.365	0.000	0.000	0.0	25.4	17.2	1.4	2421.1	1.000
7 6 8	95.92	800.88	0.421	0.000	0.000	0.0	35.1	23.9	1.7	3319.5	1.000
7 6 9	100.95	1908.41	0.445	0.144	0.000	23.5	42.4	32.2	2.6	4529.5	1.000
7 610	98.09	3129.89	0.431	0.332	0.000	53.8	47.6	50.2	4.6	7130.5	1.000
7 611	98.21	2987.64	0.431	0.441	0.000	68.5	63.0	73.0	6.2	2058.2	1.000
7 612	98.27	3203.70	0.431	0.489	0.000	78.7	65.7	83.1	6.8	2338.9	1.000
7 613	102.61	3427.66	0.449	0.486	0.000	86.7	52.1	77.6	6.2	2178.5	1.000
7 614	100.68	3435.80	0.441	0.431	0.000	59.1	71.7	74.2	5.9	2083.1	1.000
7 615	103.68	4570.50	0.460	0.313	0.000	35.3	72.1	60.1	4.4	8388.1	1.000
7 616	102.66	4050.25	0.449	0.114	0.000	13.6	43.8	31.3	2.3	4372.8	1.000
7 617	101.75	3493.98	0.446	0.000	0.000	0.0	30.9	21.0	1.4	2907.9	1.000
7 618	101.74	3574.93	0.446	0.000	0.000	0.0	22.4	15.2	1.0	2110.5	1.000
7 619	102.52	2646.74	0.449	0.000	0.000	0.0	10.4	7.1	0.5	980.4	1.000
7 620	100.42	1727.19	0.440	0.000	0.000	0.0	0.3	0.2	0.0	28.0	1.000
7 621	97.70	1093.43	0.428	0.000	0.000	0.0	0.0	0.0	0.0	0.0	1.000
7 622	97.64	758.20	0.428	0.000	0.000	0.0	0.0	0.0	0.0	0.0	1.000
7 623	101.26	597.01	0.443	0.000	0.000	0.0	0.0	0.0	0.0	0.0	1.000
7 624	97.52	273.43	0.427	0.000	0.000	0.0	0.0	0.0	0.0	0.0	1.000
DAILY SUMMARY (JUL 6)											
MN	83.27	-1042.78	0.353	0.000	0.000	0.0	0.0	0.0	0.0	0.0	1.000
MX	103.68	4570.50	0.460	0.489	0.000	86.7	72.1	83.1	6.8	8388.1	1.000
SM	2296.82	36564.48	10.011	2.750	0.000	419.1	596.7	575.7	45.8	46157.7	24.000
AV	95.70	1523.52	0.417	0.115	0.000	17.5	24.9	24.0	1.9	1923.2	1.000
MONTHLY SUMMARY (JUL)											
MN	83.27	-1042.78	0.353	0.000	0.000	0.0	0.0	0.0	0.0	0.0	1.000
MX	103.68	4570.50	0.460	0.489	0.000	86.7	72.1	83.1	6.8	8388.1	1.000
SM	2296.82	36564.48	10.011	2.750	0.000	419.1	596.7	575.7	45.8	46157.7	24.000
AV	95.70	1523.52	0.417	0.115	0.000	17.5	24.9	24.0	1.9	1923.2	1.000
YEARLY SUMMARY											
MN	83.27	-3811.76	0.353	0.000	0.000	0.0	0.0	0.0	0.0	0.0	1.000
MX	105.51	7465.70	0.469	0.770	0.000	247.0	72.1	218.1	12.0	29909.1	1.000
SM	4693.11	43744.18	20.564	10.111	0.000	1896.9	872.4	1882.1	120.2	225667.5	48.000
AV	97.77	911.34	0.428	0.211	0.000	39.5	18.2	39.2	2.5	4701.4	1.000

MMDDHH	SSFRONTW IN CONDUCTN GLAS+FRM BTU/HR	SSFRONTW IN SH COEFF MULT	SSFRONTW IN MAX SOL GAIN BTU/HR-SQFT	SSFRONTW IN SHADING FLAG
	----(17)	----(19)	----(20)	----(23)
125 1	-2364.86	0.00	0.0	1.
125 2	-2352.14	0.00	0.0	1.
125 3	-2332.78	0.00	0.0	1.
125 4	-2203.41	0.00	0.0	1.
125 5	-2255.24	0.00	0.0	1.
125 6	-2351.17	0.00	0.0	1.
125 7	-2294.74	0.00	0.0	1.
125 8	-2266.11	1.00	1000.0	1.
125 9	-2283.92	1.00	1000.0	1.
12510	-2186.21	1.00	1000.0	1.
12511	-2027.92	1.00	1000.0	1.
12512	-1781.25	1.00	1000.0	1.
12513	-1669.63	1.00	1000.0	1.
12514	-1591.12	1.00	1000.0	1.
12515	-1546.36	1.00	1000.0	1.
12516	-1475.04	1.00	1000.0	1.
12517	-1503.80	1.00	1000.0	1.
12518	-1662.53	0.00	0.0	1.
12519	-1860.93	0.00	0.0	1.
12520	-2046.73	0.00	0.0	1.
12521	-2061.03	0.00	0.0	1.
12522	-2160.72	0.00	0.0	1.
12523	-2195.40	0.00	0.0	1.
12524	-2171.49	0.00	0.0	1.
DAILY SUMMARY (JAN 25)				
MN	-2364.86	0.00	0.0	1.
MX	-1475.04	1.00	1000.0	1.
SM	-48644.54	10.00	10000.0	24.
AV	-2026.86	0.42	416.7	1.
MONTHLY SUMMARY (JAN)				
MN	-2364.86	0.00	0.0	1.
MX	-1475.04	1.00	1000.0	1.
SM	-48644.54	10.00	10000.0	24.
AV	-2026.86	0.42	416.7	1.

	SSFRONTW IN CONDUCTN GLAS+FRM BTU/HR	SSFRONTW IN SH COEFF MULT	SSFRONTW IN MAX SOL GAIN BTU/HR-SQFT	SSFRONTW IN SHADING FLAG
	----(17)	----(19)	----(20)	----(23)
7 6 1	-671.69	0.00	0.0	1.
7 6 2	-722.06	0.00	0.0	1.
7 6 3	-764.82	0.00	0.0	1.
7 6 4	-793.02	0.00	0.0	1.
7 6 5	-757.11	1.00	20.0	1.
7 6 6	-757.99	1.00	20.0	1.
7 6 7	-610.81	1.00	20.0	1.
7 6 8	-298.65	1.00	20.0	1.
7 6 9	-38.43	1.00	20.0	1.
7 610	97.62	1.00	20.0	1.
7 611	226.47	0.20	20.0	2.
7 612	284.17	0.20	20.0	2.
7 613	372.92	0.20	20.0	2.
7 614	379.57	0.20	20.0	2.
7 615	500.96	1.00	20.0	1.
7 616	472.85	1.00	20.0	1.
7 617	455.40	1.00	20.0	1.
7 618	462.21	1.00	20.0	1.
7 619	295.98	1.00	20.0	1.
7 620	81.33	1.00	20.0	1.
7 621	-109.67	0.00	0.0	1.
7 622	-162.51	0.00	0.0	1.
7 623	-156.39	0.00	0.0	1.
7 624	-289.73	0.00	0.0	1.
DAILY SUMMARY (JUL 6)				
MN	-793.02	0.00	0.0	1.
MX	500.96	1.00	20.0	2.
SM	-2503.39	12.80	320.0	28.
AV	-104.31	0.53	13.3	1.
MONTHLY SUMMARY (JUL)				
MN	-793.02	0.00	0.0	1.
MX	500.96	1.00	20.0	2.
SM	-2503.39	12.80	320.0	28.
AV	-104.31	0.53	13.3	1.
YEARLY SUMMARY				
MN	-2364.86	0.00	0.0	1.
MX	500.96	1.00	1000.0	2.
SM	-51147.93	22.80	10320.0	52.
AV	-1065.58	0.47	215.0	1.

REPORT- SV-A SYSTEM DESIGN PARAMETERS SYS-1 WEATHER FILE- TRY CHICAGO

SYSTEM NAME	SYSTEM TYPE	ALTITUDE MULTIPLIER	FLOOR AREA (SQFT)	MAX PEOPLE
SYS-1	RESYS	1.020	1344.0	0.

SUPPLY FAN (CFM)	ELEC (KW)	DELTA-T (F)	RETURN FAN (CFM)	ELEC (KW)	DELTA-T (F)	OUTSIDE AIR RATIO	COOLING CAPACITY (KBTU/HR)	SENSIBLE (SHR)	HEATING CAPACITY (KBTU/HR)	COOLING EIR (BTU/BTU)	HEATING EIR (BTU/BTU)
714.	0.090	0.4	0.	0.000	0.0	0.000	24.000	0.667	-50.000	0.43	0.37

ZONE NAME	SUPPLY FLOW (CFM)	EXHAUST FLOW (CFM)	FAN (KW)	MINIMUM FLOW RATIO	OUTSIDE AIR FLOW (CFM)	COOLING CAPACITY (KBTU/HR)	SENSIBLE (SHR)	EXTRACTION RATE (KBTU/HR)	HEATING CAPACITY (KBTU/HR)	ADDITION RATE (KBTU/HR)	MULTIPLIER
HOUSE-1	714.	0.	0.000	1.000	0.	0.00	0.00	20.79	0.00	-49.13	1.0
SUNSP-1	0.	0.	0.000	0.000	0.	0.00	0.00	0.00	0.00	0.00	1.0

SINGLE FAMILY RESIDENCE ===WITH ATTACHED SUNSPACE=== DOE-2.1E-001 Thu Nov 11 10:51:11 1993SDL RUN 1

REPORT- SS-A SYSTEM MONTHLY LOADS SUMMARY FOR SYS-1 WEATHER FILE- TRY CHICAGO

	COOLING						HEATING						ELEC	
MONTH	COOLING ENERGY (MBTU)	TIME OF MAX DY	TIME OF MAX HR	DRY-BULB TEMP	WET-BULB TEMP	MAXIMUM COOLING LOAD (KBTU/HR)	HEATING ENERGY (MBTU)	TIME OF MAX DY	TIME OF MAX HR	DRY-BULB TEMP	WET-BULB TEMP	MAXIMUM HEATING LOAD (KBTU/HR)	ELEC-TRICAL ENERGY (KWH)	MAXIMUM ELEC LOAD (KW)
JAN	0.00000					0.000	-5.336	12	9	-8.F	-8.F	-29.541	525.	1.395
FEB	0.00000					0.000	-4.227	4	9	7.F	6.F	-25.742	473.	1.387
MAR	0.00628	3	16	79.F	62.F	2.269	-2.449	24	9	7.F	6.F	-25.196	518.	1.386
APR	0.09467	27	15	82.F	61.F	6.883	-0.558	8	9	32.F	28.F	-16.896	501.	1.876
MAY	0.13108	21	14	85.F	75.F	10.377	-0.143	7	9	44.F	38.F	-11.270	513.	1.947
JUN	0.97545	20	17	90.F	78.F	12.957	0.000					0.000	627.	2.744
JUL	3.00949	13	17	97.F	78.F	14.197	0.000					0.000	964.	2.999
AUG	1.83279	20	15	89.F	73.F	12.113	0.000					0.000	782.	2.515
SEP	0.45465	11	15	87.F	72.F	9.355	-0.092	23	9	39.F	36.F	-12.245	544.	2.068
OCT	0.01026	4	16	77.F	61.F	4.021	-0.453	21	9	31.F	29.F	-16.253	499.	1.457
NOV	0.00397	2	16	77.F	62.F	3.968	-2.244	26	9	25.F	23.F	-19.119	499.	1.376
DEC	0.00000					0.000	-4.247	22	9	17.F	17.F	-22.840	523.	1.383
TOTAL	6.519						-19.748						6968.	
MAX						14.197						-29.541		2.999

REPORT- SS-B SYSTEM MONTHLY LOADS SUMMARY FOR SYS-1 WEATHER FILE- TRY CHICAGO

	--ZONE COOLING--		--ZONE HEATING-		--BASEBOARDS--		--PREHEAT OR FURN FAN ELEC--	
MONTH	COOLING BY ZONE COILS OR NAT VENTIL (MBTU)	MAXIMUM COOLING BY ZONE COILS OR NAT VENTIL (KBTU/HR)	HEATING BY ZONE COILS OR FURNACE (MBTU)	MAXIMUM HEATING BY ZONE COILS OR FURNACE (KBTU/HR)	BASEBOARD HEATING ENERGY (MBTU)	MAXIMUM BASEBOARD HEATING ENERGY (KBTU/HR)	PREHEAT COIL ENERGY OR ELEC FOR FURN FAN (MBTU)	MAXIMUM PREHEAT COIL ENERGY OR ELEC FOR FURN FAN (KBTU/HR)
JAN	0.00000	0.000	-5.33561	-29.541	0.00000	0.000	0.03263	0.181
FEB	0.00262	1.891	-4.22719	-25.742	0.00000	0.000	0.02585	0.157
MAR	0.01581	2.977	-2.44867	-25.196	0.00000	0.000	0.01498	0.154
APR	0.37852	5.965	-0.55775	-16.896	0.00000	0.000	0.00341	0.103
MAY	0.70320	8.583	-0.14315	-11.270	0.00000	0.000	0.00088	0.069
JUN	0.97776	7.597	0.00000	0.000	0.00000	0.000	0.00000	0.000
JUL	0.56267	7.672	0.00000	0.000	0.00000	0.000	0.00000	0.000
AUG	0.93378	7.577	0.00000	0.000	0.00000	0.000	0.00000	0.000
SEP	0.70545	7.715	-0.09156	-12.245	0.00000	0.000	0.00056	0.075
OCT	0.40865	6.300	-0.45299	-16.253	0.00000	0.000	0.00277	0.099
NOV	0.12187	6.381	-2.24423	-19.119	0.00000	0.000	0.01373	0.117
DEC	0.00000	0.000	-4.24668	-22.840	0.00000	0.000	0.02597	0.140
TOTAL	4.810		-19.748		0.000		0.121	
MAX		8.583		-29.541		0.000		0.181

SINGLE FAMILY RESIDENCE ===WITH ATTACHED SUNSPACE=== DOE-2.1E-001 Thu Nov 11 10:51:11 1993SDL RUN 1

REPORT- SS-C SYSTEM MONTHLY LOAD HOURS FOR SYS-1 WEATHER FILE- TRY CHICAGO

	NUMBER OF HOURS										--COINCIDENT LOADS--	
MONTH	HOURS COOLING LOAD	HOURS HEATING LOAD	HOURS COINCIDENT COOL-HEAT LOAD	HOURS FLOATING	HOURS HEATING AVAIL.	HOURS COOLING AVAIL.	HOURS FANS ON	HOURS FANS CYCLE ON	HOURS NIGHT VENTING	HOURS FLOATING WHEN FANS ON	HEATING LOAD AT COOLING PEAK (KBTU/HR)	ELECTRIC LOAD AT COOLING PEAK (KW)
JAN	0	623	0	121	744	744	744	0	0	121	0.000	1.161
FEB	0	543	0	129	672	672	672	0	0	129	0.000	1.161
MAR	3	456	0	285	744	744	744	0	0	285	0.000	0.956
APR	22	137	0	561	720	720	720	0	0	561	0.000	1.471
MAY	28	39	0	677	744	744	744	0	0	677	0.000	1.860
JUN	180	0	0	540	720	720	720	0	0	540	0.000	2.390
JUL	481	0	0	263	744	744	744	0	0	263	0.000	2.681
AUG	322	0	0	422	744	744	744	0	0	422	0.000	2.115
SEP	79	27	0	614	720	720	720	0	0	614	0.000	1.766
OCT	5	114	0	625	744	744	744	0	0	625	0.000	1.141
NOV	1	417	0	302	720	720	720	0	0	302	0.000	1.120
DEC	0	610	0	134	744	744	744	0	0	134	0.000	1.161
ANNUAL	1121	2966	0	4673	8760	8760	8760	0	0	4673		

REPORT- SS-H SYSTEM MONTHLY LOADS SUMMARY FOR SYS-1 WEATHER FILE- TRY CHICAGO

	--FAN ELEC---		--FUEL HEAT--		--FUEL COOL--		-ELEC HEAT--		-ELEC COOL--	
MONTH	FAN ENERGY (KWH)	MAXIMUM FAN LOAD (KW)	GAS OIL ENERGY (MBTU)	MAXIMUM GAS OIL LOAD (KBTU/HR)	GAS OIL ENERGY (MBTU)	MAXIMUM GAS OIL LOAD (KBTU/HR)	ELECTRIC ENERGY (KWH)	MAXIMUM ELECTRIC LOAD (KW)	ELECTRIC ENERGY (KWH)	MAXIMUM ELECTRIC LOAD (KW)
JAN	10.	0.053	8.540	42.277	0.000	0.000	0.	0.000	37.	0.050
FEB	8.	0.046	6.851	37.311	0.000	0.000	0.	0.000	33.	0.050
MAR	5.	0.045	4.198	36.591	0.000	0.000	0.	0.000	35.	0.541
APR	3.	0.048	1.056	25.412	0.000	0.000	0.	0.000	33.	1.014
MAY	3.	0.060	0.332	17.594	0.000	0.000	0.	0.000	30.	1.391
JUN	8.	0.067	0.072	0.100	0.000	0.000	0.	0.000	153.	1.742
JUL	19.	0.072	0.074	0.100	0.000	0.000	0.	0.000	459.	2.038
AUG	14.	0.065	0.074	0.100	0.000	0.000	0.	0.000	284.	1.641
SEP	4.	0.053	0.239	18.962	0.000	0.000	0.	0.000	75.	1.318
OCT	2.	0.034	0.876	24.528	0.000	0.000	0.	0.000	18.	0.697
NOV	5.	0.034	3.854	28.447	0.000	0.000	0.	0.000	31.	0.692
DEC	8.	0.041	6.985	33.461	0.000	0.000	0.	0.000	37.	0.050
TOTAL	89.		33.153		0.000		0.		1225.	
MAX		0.072		42.277		0.000		0.000		2.038

SINGLE FAMILY RESIDENCE ===WITH ATTACHED SUNSPACE=== DOE-2.1E-001 Thu Nov 11 10:51:11 1993SDL RUN 1

REPORT- SS-P LOAD, ENERGY AND PART LOAD HEATING IN SYS-1 WEATHER FILE- TRY CHICAGO

UNIT TYPE is RESYS HEATING-CAPACITY = -50.000 (KBTU/HR) HEATING-EIR = 0.370 (BTU/BTU) SUPPLY-FLOW = 714. (CFM)

MONTH		UNIT LOAD (MBTU) (KBTU/HR)	ENERGY USE (KWH) (KW)	COMPRESSOR (KWH) (KW)	FAN ENERGY (KWH) (KW)		00 10	10 20	20 30	30 40	40 50	50 60	60 70	70 80	80 90	90 100	100 +	TOTAL RUN HOURS
JAN	SUM	-5.336	0.000	0.000	9.887	CMP	0	0	0	0	0	0	0	0	0	0	0	0
	PEAK	-29.541	0.000	0.000	0.053	FAN	159	235	167	47	10	5	0	0	0	0	0	623
	DAY/HR	12/ 9	0/ 0	0/ 0	0/ 0													
FEB	SUM	-4.227	0.000	0.000	8.063	CMP	0	0	0	0	0	0	0	0	0	0	0	0
	PEAK	-25.742	0.000	0.000	0.046	FAN	170	217	120	24	11	1	0	0	0	0	0	543
	DAY/HR	4/ 9	0/ 0	0/ 0	0/ 0													
MAR	SUM	-2.449	0.000	0.000	5.214	CMP	0	0	0	0	0	0	0	0	0	0	0	0
	PEAK	-25.196	0.000	0.000	0.045	FAN	252	148	39	14	2	1	0	0	0	0	0	456
	DAY/HR	24/ 9	0/ 0	0/ 0	0/ 0													
APR	SUM	-0.558	0.000	0.000	3.193	CMP	0	0	0	0	0	0	0	0	0	0	0	0
	PEAK	-16.896	0.000	0.000	0.048	FAN	102	24	9	2	0	0	0	0	0	0	0	137
	DAY/HR	8/ 9	0/ 0	0/ 0	0/ 0													
MAY	SUM	-0.143	0.000	0.000	2.890	CMP	0	0	0	0	0	0	0	0	0	0	0	0
	PEAK	-11.270	0.000	0.000	0.060	FAN	28	9	2	0	0	0	0	0	0	0	0	39
	DAY/HR	7/ 9	0/ 0	0/ 0	0/ 0													
JUN	SUM	0.000	0.000	0.000	8.178	CMP	0	0	0	0	0	0	0	0	0	0	0	0
	PEAK	0.000	0.000	0.000	0.067	FAN	0	0	0	0	0	0	0	0	0	0	0	0
	DAY/HR	30/ 1	0/ 0	0/ 0	0/ 0													
JUL	SUM	0.000	0.000	0.000	19.171	CMP	0	0	0	0	0	0	0	0	0	0	0	0
	PEAK	0.000	0.000	0.000	0.072	FAN	0	0	0	0	0	0	0	0	0	0	0	0
	DAY/HR	31/ 1	0/ 0	0/ 0	0/ 0													
AUG	SUM	0.000	0.000	0.000	13.572	CMP	0	0	0	0	0	0	0	0	0	0	0	0
	PEAK	0.000	0.000	0.000	0.065	FAN	0	0	0	0	0	0	0	0	0	0	0	0
	DAY/HR	31/ 1	0/ 0	0/ 0	0/ 0													
SEP	SUM	-0.092	0.000	0.000	4.303	CMP	0	0	0	0	0	0	0	0	0	0	0	0
	PEAK	-12.245	0.000	0.000	0.053	FAN	21	4	2	0	0	0	0	0	0	0	0	27
	DAY/HR	23/ 9	0/ 0	0/ 0	0/ 0													
OCT	SUM	-0.453	0.000	0.000	2.381	CMP	0	0	0	0	0	0	0	0	0	0	0	0
	PEAK	-16.253	0.000	0.000	0.034	FAN	88	18	6	2	0	0	0	0	0	0	0	114
	DAY/HR	21/ 9	0/ 0	0/ 0	0/ 0													
NOV	SUM	-2.244	0.000	0.000	4.696	CMP	0	0	0	0	0	0	0	0	0	0	0	0
	PEAK	-19.119	0.000	0.000	0.034	FAN	215	168	21	13	0	0	0	0	0	0	0	417
	DAY/HR	26/ 9	0/ 0	0/ 0	0/ 0													
DEC	SUM	-4.247	0.000	0.000	7.771	CMP	0	0	0	0	0	0	0	0	0	0	0	0
	PEAK	-22.840	0.000	0.000	0.041	FAN	182	323	74	26	5	0	0	0	0	0	0	610
	DAY/HR	22/ 9	0/ 0	0/ 0	0/ 0													
YR	SUM	-19.748	0.000	0.000	89.319	CMP	0	0	0	0	0	0	0	0	0	0	0	0
	PEAK	-29.541	0.000	0.000	0.072	FAN	1217	1146	440	128	28	7	0	0	0	0	0	2966
	MON/DAY	0/ 0	0/ 0	0/ 0	0/ 0													

SINGLE FAMILY RESIDENCE ===WITH ATTACHED SUNSPACE=== DOE-2.1E-001 Thu Nov 11 10:51:11 1993SDL RUN 1

REPORT- SS-P LOAD, ENERGY AND PART LOAD COOLING IN SYS-1 WEATHER FILE- TRY CHICAGO

UNIT TYPE is RESYS COOLING-CAPACITY = 24.000 (KBTU/HR) COOLING-EIR = 0.427 (BTU/BTU) SUPPLY-FLOW = 714. (CFM)

MONTH	SUM PEAK	UNIT LOAD (MBTU) (KBTU/HR)	ENERGY USE (KWH) (KW)	COMPRESSOR (KWH) (KW)	FAN ENERGY (KWH) (KW)		Number of hours within each PART LOAD range 00-10	10-20	20-30	30-40	40-50	50-60	60-70	70-80	80-90	90-100	100+	TOTAL RUN HOURS
JAN	SUM	0.000	37.000	0.000	9.887	CMP	0	0	0	0	0	0	0	0	0	0	0	0
	PEAK	0.000	0.050	0.000	0.053	FAN	0	0	0	0	0	0	0	0	0	0	0	0
	DAY/HR	31/24	0/ 0	0/ 0	0/ 0													
FEB	SUM	0.000	33.400	0.000	8.063	CMP	0	0	0	0	0	0	0	0	0	0	0	0
	PEAK	0.000	0.050	0.000	0.046	FAN	0	0	0	0	0	0	0	0	0	0	0	0
	DAY/HR	28/24	0/ 0	0/ 0	0/ 0													
MAR	SUM	0.006	34.756	1.557	5.214	CMP	3	0	0	0	0	0	0	0	0	0	0	3
	PEAK	2.269	0.541	0.541	0.045	FAN	2	1	0	0	0	0	0	0	0	0	0	3
	DAY/HR	3/16	0/ 0	3/16	0/ 0													
APR	SUM	0.095	33.248	16.148	3.193	CMP	4	8	10	0	0	0	0	0	0	0	0	22
	PEAK	6.883	1.014	1.014	0.048	FAN	3	8	10	1	0	0	0	0	0	0	0	22
	DAY/HR	27/15	0/ 0	27/15	0/ 0													
MAY	SUM	0.131	30.220	21.470	2.890	CMP	9	6	6	6	1	0	0	0	0	0	0	28
	PEAK	10.377	1.391	1.391	0.060	FAN	8	5	6	8	1	0	0	0	0	0	0	28
	DAY/HR	21/14	0/ 0	21/14	0/ 0													
JUN	SUM	0.975	152.585	152.285	8.178	CMP	42	22	58	49	6	3	0	0	0	0	0	180
	PEAK	12.957	1.742	1.742	0.067	FAN	40	23	49	59	6	3	0	0	0	0	0	180
	DAY/HR	20/17	0/ 0	20/18	0/ 0													
JUL	SUM	3.009	459.262	459.262	19.171	CMP	98	61	98	128	77	16	3	0	0	0	0	481
	PEAK	14.197	2.038	2.038	0.072	FAN	94	60	97	136	72	19	3	0	0	0	0	481
	DAY/HR	13/17	0/ 0	13/18	0/ 0													
AUG	SUM	1.833	284.092	284.092	13.572	CMP	80	38	72	87	43	2	0	0	0	0	0	322
	PEAK	12.113	1.641	1.641	0.065	FAN	75	39	72	90	43	3	0	0	0	0	0	322
	DAY/HR	20/15	0/ 0	26/17	0/ 0													
SEP	SUM	0.455	74.856	70.206	4.303	CMP	12	10	28	29	0	0	0	0	0	0	0	79
	PEAK	9.355	1.318	1.318	0.053	FAN	9	9	30	30	1	0	0	0	0	0	0	79
	DAY/HR	11/15	0/ 0	11/15	0/ 0													
OCT	SUM	0.010	17.694	2.544	2.381	CMP	3	2	0	0	0	0	0	0	0	0	0	5
	PEAK	4.021	0.697	0.697	0.034	FAN	3	2	0	0	0	0	0	0	0	0	0	5
	DAY/HR	4/16	0/ 0	4/16	0/ 0													
NOV	SUM	0.004	31.042	0.692	4.696	CMP	0	1	0	0	0	0	0	0	0	0	0	1
	PEAK	3.968	0.692	0.692	0.034	FAN	0	1	0	0	0	0	0	0	0	0	0	1
	DAY/HR	2/16	0/ 0	2/16	0/ 0													
DEC	SUM	0.000	37.200	0.000	7.771	CMP	0	0	0	0	0	0	0	0	0	0	0	0
	PEAK	0.000	0.050	0.000	0.041	FAN	0	0	0	0	0	0	0	0	0	0	0	0
	DAY/HR	31/24	0/ 0	0/ 0	0/ 0													
YR	SUM	6.519	1225.443	1008.255	89.319	CMP	251	148	272	299	127	21	3	0	0	0	0	1121
	PEAK	14.197	2.038	2.038	0.072	FAN	234	148	264	324	123	25	3	0	0	0	0	1121
	MON/DAY	0/ 0	0/ 0	7/13	0/ 0													

REPORT- SS-Q HEAT PUMP COOLING SUMMARY FOR SYS-1 WEATHER FILE- TRY CHICAGO

	UNIT RUN TIME (HOURS)	TOTAL LOAD ON UNIT (MBTU)	ENERGY IN TO UNIT (MBTU)	AUXILIARY ENERGY (MBTU)	SUP UNIT LOAD (MBTU)	SUP UNIT ENERGY (MBTU)	WASTE HEAT GENERATED (MBTU)	WASTE HEAT USE (MBTU)		INDOOR FAN ENERGY (MBTU)
JAN	0.	0.000	0.000	0.126	0.000	0.000	0.000	0.000	0.000	0.000
FEB	0.	0.000	0.000	0.114	0.000	0.000	0.000	0.000	0.000	0.000
MAR	0.	0.006	0.005	0.113	0.000	0.000	0.000	0.000	0.000	0.000
APR	4.	0.095	0.055	0.058	0.000	0.000	0.000	0.000	0.000	0.001
MAY	5.	0.131	0.073	0.030	0.000	0.000	0.000	0.000	0.000	0.002
JUN	41.	0.975	0.520	0.001	0.000	0.000	0.000	0.000	0.000	0.013
JUL	128.	3.009	1.567	0.000	0.000	0.000	0.000	0.000	0.000	0.040
AUG	78.	1.833	0.970	0.000	0.000	0.000	0.000	0.000	0.000	0.024
SEP	19.	0.455	0.240	0.016	0.000	0.000	0.000	0.000	0.000	0.006
OCT	0.	0.010	0.009	0.052	0.000	0.000	0.000	0.000	0.000	0.000
NOV	0.	0.004	0.002	0.104	0.000	0.000	0.000	0.000	0.000	0.000
DEC	0.	0.000	0.000	0.127	0.000	0.000	0.000	0.000	0.000	0.000
ANNUAL	277.	6.519	3.441	0.741	0.000	0.000	0.000	0.000	0.000	0.087

CSPF (WITH PARASITICS) = 1.53 (BTU/BTU)

CSPF (WITHOUT PARASITICS) = 1.89 (BTU/BTU)

REPORT- SS-Q HEAT PUMP HEATING SUMMARY FOR SYS-1 WEATHER FILE- TRY CHICAGO

	UNIT RUN TIME (HOURS)	TOTAL LOAD ON UNIT (MBTU)	ENERGY IN TO UNIT (MBTU)	AUXILIARY ENERGY (MBTU)	SUP UNIT LOAD (MBTU)	SUP UNIT ENERGY (MBTU)	WASTE HEAT GENERATED (MBTU)	WASTE HEAT USE (MBTU)	DEFROST LOAD (MBTU)	INDOOR FAN ENERGY (MBTU)
JAN	107.	-5.336	8.476	0.064	0.000	0.000	0.000	0.000	0.000	0.033
FEB	85.	-4.227	6.792	0.059	0.000	0.000	0.000	0.000	0.000	0.026
MAR	49.	-2.449	4.129	0.070	0.000	0.000	0.000	0.000	0.000	0.015
APR	11.	-0.558	0.985	0.071	0.000	0.000	0.000	0.000	0.000	0.003
MAY	3.	-0.143	0.258	0.074	0.000	0.000	0.000	0.000	0.000	0.001
JUN	0.	0.000	0.000	0.072	0.000	0.000	0.000	0.000	0.000	0.000
JUL	0.	0.000	0.000	0.074	0.000	0.000	0.000	0.000	0.000	0.000
AUG	0.	0.000	0.000	0.074	0.000	0.000	0.000	0.000	0.000	0.000
SEP	2.	-0.092	0.168	0.072	0.000	0.000	0.000	0.000	0.000	0.001
OCT	9.	-0.453	0.803	0.073	0.000	0.000	0.000	0.000	0.000	0.003
NOV	45.	-2.244	3.787	0.068	0.000	0.000	0.000	0.000	0.000	0.014
DEC	85.	-4.247	6.919	0.066	0.000	0.000	0.000	0.000	0.000	0.026
ANNUAL	395.	-19.748	32.316	0.837	0.000	0.000	0.000	0.000	0.000	0.121

HSPF (WITH PARASITICS) = 0.60 (BTU/BTU)

HSPF (WITHOUT PARASITICS) = 0.61 (BTU/BTU)

REPORT- SS-F ZONE DEMAND SUMMARY IN SYS-1 FOR HOUSE-1 WEATHER FILE- TRY CHICAGO

	----DEMANDS-----		--BASEBOARDS---		--TEMPERATURES--		--LOADS NOT MET--	
MONTH	HEAT EXTRACTION ENERGY (MBTU)	HEAT ADDITION ENERGY (MBTU)	BASEBOARD ENERGY (MBTU)	MAXIMUM BASEBOARD LOAD (KBTU/HR)	MAXIMUM ZONE TEMP (F)	MINIMUM ZONE TEMP (F)	HOURS UNDER HEATED	HOURS UNDER COOLED
JAN	0.00000	-5.298	0.00000	0.000	74.2	55.1	0	0
FEB	0.00262	-4.192	0.00000	0.000	75.0	55.1	0	0
MAR	0.02122	-2.424	0.00000	0.000	77.8	55.1	0	0
APR	0.46508	-0.549	0.00000	0.000	78.2	55.2	0	0
MAY	0.80302	-0.143	0.00000	0.000	78.0	55.2	0	0
JUN	1.78336	-0.001	0.00000	0.000	78.0	65.8	0	0
JUL	2.99525	0.000	0.00000	0.000	78.2	72.1	0	0
AUG	2.42679	0.000	0.00000	0.000	78.2	69.8	0	0
SEP	1.08423	-0.089	0.00000	0.000	78.0	56.2	0	0
OCT	0.41764	-0.442	0.00000	0.000	78.1	55.2	0	0
NOV	0.12538	-2.222	0.00000	0.000	78.2	55.2	0	0
DEC	0.00000	-4.209	0.00000	0.000	74.0	55.2	0	0

REPORT- SS-O TEMPERATURE SCATTER PLOT SYS-1 FOR HOUSE-1 WEATHER FILE- TRY CHICAGO

TOTAL HOURS AT TEMPERATURE LEVEL AND TIME OF DAY

HOUR	1AM	2	3	4	5	6	7	8	9	10	11	12	1PM	2	3	4	5	6	7	8	9	10	11	12	TOTAL
ABOVE 85	0	0	0	0	0	0	0	0	0	0	0	0	0	0	0	0	0	0	0	0	0	0	0	0	0
80-85	0	0	0	0	0	0	0	0	0	0	0	0	0	0	0	0	0	0	0	0	0	0	0	0	0
75-80	86	74	62	50	50	57	77	81	93	118	145	172	187	187	195	181	173	164	156	155	147	135	133	105	2983
70-75	62	64	65	66	62	59	54	110	265	247	220	193	178	178	170	184	192	201	209	210	218	213	49	63	3532
65-70	42	43	50	50	53	46	39	10	7	0	0	0	0	0	0	0	0	0	0	0	0	16	56	44	456
60-65	51	39	33	32	27	28	25	16	0	0	0	0	0	0	0	0	0	0	0	0	0	1	96	98	446
BELOW 60	124	145	155	167	173	175	170	148	0	0	0	0	0	0	0	0	0	0	0	0	0	0	31	55	1343

MMDDHH	GLOBAL DRY BULB TEMP F	HOUSE-1 ZONE TEMP F	HOUSE-1 FLOAT TEMP F	HOUSE-1 THERMOST SETPOINT F	HOUSE-1 EXTRACTN RATE BTU/HR	HOUSE-1 CONVEC EXTRACTN BTU/HR	SUNSP-1 ZONE TEMP F	SUNSP-1 FLOAT TEMP F	SUNSP-1 EXTRACTN RATE BTU/HR	SUNSP-1 CONVEC EXTRACTN BTU/HR	SUNSP-1 SUNSPACE VENT EXT BTU/HR
	----(8)	----(6)	----(21)	----(7)	----(8)	----(61)	----(6)	----(21)	----(8)	----(61)	----(64)
125 1	30.0	57.4	57.4	55.0	0.	0.	50.5	50.5	0.	0.	0.
125 2	31.0	55.2	55.2	55.0	-12.	0.	49.4	49.4	0.	0.	0.
125 3	32.0	55.2	53.6	55.0	-1514.	0.	48.4	48.4	0.	0.	0.
125 4	33.0	55.2	52.9	55.0	-2087.	0.	47.9	47.9	0.	0.	0.
125 5	33.0	55.2	52.5	55.0	-2533.	0.	46.9	46.9	0.	0.	0.
125 6	32.0	55.2	52.5	55.0	-2525.	0.	45.7	45.7	0.	0.	0.
125 7	33.0	55.2	52.9	55.0	-2168.	0.	45.0	45.0	0.	0.	0.
125 8	32.0	55.2	54.7	55.0	-472.	0.	45.6	45.6	0.	0.	0.
125 9	33.0	70.1	56.1	70.0	-12900.	0.	57.5	57.5	0.	0.	0.
12510	36.0	70.2	62.5	70.0	-7278.	0.	72.5	72.5	0.	0.	0.
12511	39.0	70.2	69.1	70.0	-1051.	-1411.	80.8	80.8	0.	1382.	0.
12512	43.0	74.2	74.2	78.0	0.	-2303.	88.9	88.9	0.	2272.	0.
12513	45.0	74.0	74.0	78.0	0.	-551.	89.6	89.6	0.	545.	2265.
12514	46.0	74.2	74.2	78.0	0.	0.	89.8	89.8	0.	0.	3272.
12515	47.0	74.0	74.0	78.0	0.	-506.	88.7	88.7	0.	500.	2612.
12516	48.0	74.0	74.0	70.0	0.	-1786.	88.5	88.5	0.	1766.	0.
12517	48.0	72.8	72.8	70.0	0.	-1960.	77.9	77.9	0.	1926.	0.
12518	44.0	70.2	70.0	70.0	-262.	-759.	74.0	74.0	0.	732.	0.
12519	41.0	70.2	66.9	70.0	-3047.	0.	71.4	71.4	0.	0.	0.
12520	38.0	70.2	66.2	70.0	-3784.	0.	67.2	67.2	0.	0.	0.
12521	37.0	70.2	65.6	70.0	-4304.	0.	64.3	64.3	0.	0.	0.
12522	36.0	70.2	64.8	70.0	-5068.	0.	61.6	61.6	0.	0.	0.
12523	35.0	64.4	64.4	55.0	0.	0.	59.3	59.3	0.	0.	0.
12524	35.0	62.7	62.7	55.0	0.	0.	57.5	57.5	0.	0.	0.
DAILY SUMMARY (JAN 25)											
MN	30.0	55.2	52.5	55.0	-12900.	-2303.	45.0	45.0	0.	0.	0.
MX	48.0	74.2	74.2	78.0	0.	0.	89.8	89.8	0.	2272.	3272.
SM	907.0	1575.9	1523.1	1562.0	-49004.	-9275.	1569.0	1569.0	0.	9124.	8149.
AV	37.8	65.7	63.5	65.1	-2042.	-386.	65.4	65.4	0.	380.	340.
MONTHLY SUMMARY (JAN)											
MN	30.0	55.2	52.5	55.0	-12900.	-2303.	45.0	45.0	0.	0.	0.
MX	48.0	74.2	74.2	78.0	0.	0.	89.8	89.8	0.	2272.	3272.
SM	907.0	1575.9	1523.1	1562.0	-49004.	-9275.	1569.0	1569.0	0.	9124.	8149.
AV	37.8	65.7	63.5	65.1	-2042.	-386.	65.4	65.4	0.	380.	340.

	GLOBAL DRY BULB TEMP F	HOUSE-1 ZONE TEMP F	HOUSE-1 FLOAT TEMP F	HOUSE-1 THERMOST SETPOINT F	HOUSE-1 EXTRACTN RATE BTU/HR	HOUSE-1 CONVEC EXTRACTN BTU/HR	SUNSP-1 ZONE TEMP F	SUNSP-1 FLOAT TEMP F	SUNSP-1 EXTRACTN RATE BTU/HR	SUNSP-1 CONVEC EXTRACTN BTU/HR	SUNSP-1 SUNSPACE VENT EXT BTU/HR
	----(8)	----(6)	----(21)	----(7)	-----(8)	----(61)	----(6)	----(21)	----(8)	----(61)	----(64)
7 6 1	62.0	75.2	75.2	78.0	0.	0.	70.7	70.7	0.	0.	0.
7 6 2	62.0	74.3	74.3	78.0	0.	0.	69.2	69.2	0.	0.	0.
7 6 3	61.0	73.3	73.3	78.0	0.	0.	67.8	67.8	0.	0.	0.
7 6 4	60.0	72.2	72.2	78.0	0.	0.	67.0	67.0	0.	0.	0.
7 6 5	61.0	72.2	72.2	78.0	0.	0.	66.1	66.1	0.	0.	0.
7 6 6	61.0	73.5	73.5	78.0	0.	0.	67.3	67.3	0.	0.	0.
7 6 7	64.0	76.4	76.4	78.0	0.	0.	69.6	69.6	0.	0.	0.
7 6 8	69.0	75.0	77.7	75.0	2430.	0.	74.5	74.5	0.	0.	0.
7 6 9	73.0	75.0	78.6	75.0	3203.	0.	80.2	80.2	0.	0.	0.
7 610	76.0	77.8	80.0	78.0	1935.	0.	80.1	80.1	0.	0.	1571.
7 611	78.0	77.8	82.5	78.0	4140.	0.	81.1	81.1	0.	0.	1323.
7 612	79.0	77.9	83.9	78.0	5277.	0.	82.3	82.3	0.	0.	1384.
7 613	80.0	77.9	84.5	78.0	5951.	0.	83.2	83.2	0.	0.	1423.
7 614	80.0	77.9	85.3	78.0	6597.	0.	83.1	83.1	0.	0.	1589.
7 615	81.0	77.9	86.1	78.0	7324.	0.	86.2	86.2	0.	0.	2024.
7 616	81.0	77.9	86.2	78.0	7434.	0.	84.5	84.5	0.	0.	2049.
7 617	81.0	77.9	86.0	78.0	7217.	0.	84.1	84.1	0.	0.	1624.
7 618	81.0	77.9	86.0	78.0	7185.	0.	84.4	84.4	0.	0.	1653.
7 619	78.0	77.9	86.0	78.0	7210.	0.	81.0	81.0	0.	0.	1516.
7 620	75.0	77.9	84.3	78.0	5708.	0.	79.9	79.9	0.	0.	790.
7 621	72.0	75.0	82.8	75.0	6958.	0.	79.5	79.5	0.	0.	199.
7 622	71.0	77.8	80.8	78.0	2603.	0.	78.7	78.7	0.	0.	0.
7 623	71.0	77.8	80.3	78.0	2263.	0.	77.6	77.6	0.	0.	0.
7 624	69.0	77.8	78.0	78.0	184.	0.	76.0	76.0	0.	0.	0.
DAILY SUMMARY (JUL 6)											
MN	60.0	72.2	72.2	75.0	0.	0.	66.1	66.1	0.	0.	0.
MX	81.0	77.9	86.2	78.0	7434.	0.	86.2	86.2	0.	0.	2049.
SM	1726.0	1832.4	1926.1	1863.0	83617.	0.	1854.2	1854.2	0.	0.	17145.
AV	71.9	76.3	80.3	77.6	3484.	0.	77.3	77.3	0.	0.	714.
MONTHLY SUMMARY (JUL)											
MN	60.0	72.2	72.2	75.0	0.	0.	66.1	66.1	0.	0.	0.
MX	81.0	77.9	86.2	78.0	7434.	0.	86.2	86.2	0.	0.	2049.
SM	1726.0	1832.4	1926.1	1863.0	83617.	0.	1854.2	1854.2	0.	0.	17145.
AV	71.9	76.3	80.3	77.6	3484.	0.	77.3	77.3	0.	0.	714.
YEARLY SUMMARY											
MN	30.0	55.2	52.5	55.0	-12900.	-2303.	45.0	45.0	0.	0.	0.
MX	81.0	77.9	86.2	78.0	7434.	0.	89.8	89.8	0.	2272.	3272.
SM	2633.0	3408.3	3449.1	3425.0	34614.	-9275.	3423.2	3423.2	0.	9124.	25293.
AV	54.9	71.0	71.9	71.4	721.	-193.	71.3	71.3	0.	190.	527.

MMDDHH	HOUSE-1 SENSIBLE LOAD-IN BTU/HR	HOUSE-1 HTG SET POINT F	HOUSE-1 CLG SET POINT F	HOUSE-1 CONVEC AIRFLOW CFM	HOUSE-1 COM WIN SOL GAIN BTU/HR	HOUSE-1 COM WIN SOL LOAD BTU/HR	HOUSE-1 COM WIN CONDUCTN BTU/HR	HOUSE-1 COM WALL ABSD SOL BTU/HR	HOUSE-1 COM WALL CONDUCTN BTU/HR	SUNSP-1 SENSIBLE LOAD-IN BTU/HR
	----(1)	----(17)	----(18)	----(62)	----(56)	----(57)	----(58)	----(59)	----(60)	----(1)
125 1	-7668.	55.0	78.0	0.0	0.	0.	0.	94.	-91.	-3056.
125 2	-7860.	55.0	78.0	0.0	0.	0.	0.	96.	-111.	-3189.
125 3	-7916.	55.0	78.0	0.0	0.	0.	0.	98.	-128.	-3291.
125 4	-7716.	55.0	78.0	0.0	0.	0.	0.	96.	-142.	-3213.
125 5	-7839.	55.0	78.0	0.0	0.	0.	0.	98.	-153.	-3376.
125 6	-7668.	55.0	78.0	0.0	0.	0.	0.	99.	-161.	-3603.
125 7	-7121.	55.0	78.0	0.0	0.	0.	0.	99.	-169.	-3621.
125 8	-5139.	55.0	78.0	0.0	0.	0.	0.	94.	-177.	-3236.
125 9	-3908.	70.0	78.0	0.0	0.	0.	0.	98.	-184.	-662.
12510	-2435.	70.0	78.0	0.0	0.	0.	0.	102.	-183.	2303.
12511	574.	70.0	78.0	170.0	0.	0.	0.	103.	-152.	4939.
12512	3471.	70.0	78.0	178.6	0.	0.	0.	102.	-87.	7061.
12513	3488.	70.0	78.0	33.3	0.	0.	0.	105.	-12.	7246.
12514	3413.	70.0	78.0	0.0	0.	0.	0.	104.	59.	7366.
12515	2349.	70.0	78.0	31.0	0.	0.	0.	106.	108.	6773.
12516	747.	70.0	78.0	113.2	0.	0.	0.	105.	135.	5219.
12517	-652.	70.0	78.0	200.0	0.	0.	0.	105.	147.	2752.
12518	-1932.	70.0	78.0	160.0	0.	0.	0.	97.	147.	896.
12519	-3172.	70.0	78.0	0.0	0.	0.	0.	100.	122.	-190.
12520	-3573.	70.0	78.0	0.0	0.	0.	0.	101.	87.	-986.
12521	-3956.	70.0	78.0	0.0	0.	0.	0.	98.	55.	-1398.
12522	-4668.	70.0	78.0	0.0	0.	0.	0.	101.	24.	-1830.
12523	-5024.	55.0	78.0	0.0	0.	0.	0.	99.	-5.	-2136.
12524	-4849.	55.0	78.0	0.0	0.	0.	0.	98.	-30.	-2328.
DAILY SUMMARY (JAN 25)										
MN	-7916.	55.0	78.0	0.0	0.	0.	0.	94.	-184.	-3621.
MX	3488.	70.0	78.0	200.0	0.	0.	0.	106.	147.	7366.
SM	-79055.	1530.0	1872.0	886.1	0.	0.	0.	2396.	-902.	8440.
AV	-3294.	63.8	78.0	36.9	0.	0.	0.	100.	-38.	352.
MONTHLY SUMMARY (JAN)										
MN	-7916.	55.0	78.0	0.0	0.	0.	0.	94.	-184.	-3621.
MX	3488.	70.0	78.0	200.0	0.	0.	0.	106.	147.	7366.
SM	-79055.	1530.0	1872.0	886.1	0.	0.	0.	2396.	-902.	8440.
AV	-3294.	63.8	78.0	36.9	0.	0.	0.	100.	-38.	352.

	HOUSE-1 SENSIBLE LOAD-IN BTU/HR	HOUSE-1 HTG SET POINT F	HOUSE-1 CLG SET POINT F	HOUSE-1 CONVEC AIRFLOW CFM	HOUSE-1 COM WIN SOL GAIN BTU/HR	HOUSE-1 COM WIN SOL LOAD BTU/HR	HOUSE-1 COM WIN CONDUCTN BTU/HR	HOUSE-1 COM WALL ABSD SOL BTU/HR	HOUSE-1 COM WALL CONDUCTN BTU/HR	SUNSP-1 SENSIBLE LOAD-IN BTU/HR
	----(1)	----(17)	----(18)	----(62)	----(56)	----(57)	----(58)	----(59)	----(60)	----(1)
7 6 1	155.	55.0	78.0	0.0	0.	0.	0.	84.	51.	-532.
7 6 2	-289.	55.0	78.0	0.0	0.	0.	0.	84.	38.	-743.
7 6 3	-694.	55.0	78.0	0.0	0.	0.	0.	83.	25.	-902.
7 6 4	-1114.	55.0	78.0	0.0	0.	0.	0.	93.	13.	-981.
7 6 5	-597.	55.0	78.0	0.0	0.	0.	0.	84.	2.	-1037.
7 6 6	866.	55.0	78.0	0.0	0.	0.	0.	84.	-8.	-697.
7 6 7	3125.	55.0	78.0	0.0	0.	0.	0.	85.	-16.	-204.
7 6 8	3452.	70.0	78.0	0.0	0.	0.	0.	96.	-18.	801.
7 6 9	4253.	70.0	78.0	0.0	0.	0.	0.	101.	-11.	1907.
7 610	5410.	70.0	78.0	0.0	0.	0.	0.	98.	9.	3128.
7 611	6816.	70.0	78.0	0.0	0.	0.	0.	98.	37.	2978.
7 612	7600.	70.0	78.0	0.0	0.	0.	0.	98.	60.	3191.
7 613	8206.	70.0	78.0	0.0	0.	0.	0.	103.	76.	3411.
7 614	8704.	70.0	78.0	0.0	0.	0.	0.	101.	88.	3421.
7 615	9429.	70.0	78.0	0.0	0.	0.	0.	104.	97.	4550.
7 616	9494.	70.0	78.0	0.0	0.	0.	0.	103.	104.	4037.
7 617	9204.	70.0	78.0	0.0	0.	0.	0.	102.	114.	3477.
7 618	9143.	70.0	78.0	0.0	0.	0.	0.	102.	119.	3557.
7 619	9134.	70.0	78.0	0.0	0.	0.	0.	103.	119.	2644.
7 620	7556.	70.0	78.0	0.0	0.	0.	0.	100.	118.	1728.
7 621	6213.	70.0	78.0	0.0	0.	0.	0.	98.	109.	1096.
7 622	5180.	55.0	78.0	0.0	0.	0.	0.	98.	99.	760.
7 623	4483.	55.0	78.0	0.0	0.	0.	0.	101.	90.	598.
7 624	2114.	55.0	78.0	0.0	0.	0.	0.	98.	82.	272.
DAILY SUMMARY (JUL 6)										
MN	-1114.	55.0	78.0	0.0	0.	0.	0.	83.	-18.	-1037.
MX	9494.	70.0	78.0	0.0	0.	0.	0.	104.	119.	4550.
SM	117840.	1530.0	1872.0	0.0	0.	0.	0.	2297.	1398.	36458.
AV	4910.	63.8	78.0	0.0	0.	0.	0.	96.	58.	1519.
MONTHLY SUMMARY (JUL)										
MN	-1114.	55.0	78.0	0.0	0.	0.	0.	83.	-18.	-1037.
MX	9494.	70.0	78.0	0.0	0.	0.	0.	104.	119.	4550.
SM	117840.	1530.0	1872.0	0.0	0.	0.	0.	2297.	1398.	36458.
AV	4910.	63.8	78.0	0.0	0.	0.	0.	96.	58.	1519.
YEARLY SUMMARY										
MN	-7916.	55.0	78.0	0.0	0.	0.	0.	83.	-184.	-3621.
MX	9494.	70.0	78.0	200.0	0.	0.	0.	106.	147.	7366.
SM	38785.	3060.0	3744.0	886.1	0.	0.	0.	4693.	496.	44898.
AV	808.	63.8	78.0	18.5	0.	0.	0.	98.	10.	935.

MMDDHH	SUNSP-1 HTG SET POINT F	SUNSP-1 CLG SET POINT F	SUNSP-1 CONVEC AIRFLOW CFM	SUNSP-1 COM WIN CONDUCTN BTU/HR	SUNSP-1 COM WALL ABSD SOL BTU/HR	SUNSP-1 COM WALL CONDUCTN BTU/HR	SUNSP-1 SUNSPACE VENT FLW CFM
	----(17)	----(18)	----(62)	----(58)	----(59)	----(60)	----(63)
125 1	-999.0	999.0	0.0	0.	94.	72.	0.0
125 2	-999.0	999.0	0.0	0.	96.	51.	0.0
125 3	-999.0	999.0	0.0	0.	98.	28.	0.0
125 4	-999.0	999.0	0.0	0.	96.	4.	0.0
125 5	-999.0	999.0	0.0	0.	98.	-9.	0.0
125 6	-999.0	999.0	0.0	0.	99.	-16.	0.0
125 7	-999.0	999.0	0.0	0.	99.	-19.	0.0
125 8	-999.0	999.0	0.0	0.	94.	-25.	0.0
125 9	-999.0	999.0	0.0	0.	98.	-24.	0.0
12510	-999.0	999.0	0.0	0.	102.	-16.	0.0
12511	-999.0	999.0	170.0	0.	103.	20.	0.0
12512	-999.0	999.0	178.6	0.	102.	56.	0.0
12513	-999.0	999.0	33.3	0.	105.	81.	47.6
12514	-999.0	999.0	0.0	0.	104.	101.	70.2
12515	-999.0	999.0	31.0	0.	106.	117.	57.4
12516	-999.0	999.0	113.2	0.	105.	125.	0.0
12517	-999.0	999.0	200.0	0.	105.	129.	0.0
12518	-999.0	999.0	160.0	0.	97.	125.	0.0
12519	-999.0	999.0	0.0	0.	100.	122.	0.0
12520	-999.0	999.0	0.0	0.	101.	115.	0.0
12521	-999.0	999.0	0.0	0.	98.	105.	0.0
12522	-999.0	999.0	0.0	0.	101.	102.	0.0
12523	-999.0	999.0	0.0	0.	99.	99.	0.0
12524	-999.0	999.0	0.0	0.	98.	95.	0.0
DAILY SUMMARY (JAN 25)							
MN	-999.0	999.0	0.0	0.	94.	-25.	0.0
MX	-999.0	999.0	200.0	0.	106.	129.	70.2
SM	-23976.0	23976.0	886.1	0.	2396.	1436.	175.3
AV	-999.0	999.0	36.9	0.	100.	60.	7.3
MONTHLY SUMMARY (JAN)							
MN	-999.0	999.0	0.0	0.	94.	-25.	0.0
MX	-999.0	999.0	200.0	0.	106.	129.	70.2
SM	-23976.0	23976.0	886.1	0.	2396.	1436.	175.3
AV	-999.0	999.0	36.9	0.	100.	60.	7.3

	SUNSP-1 HTG SET POINT F	SUNSP-1 CLG SET POINT F	SUNSP-1 CONVEC AIRFLOW CFM	SUNSP-1 COM WIN CONDUCTN BTU/HR	SUNSP-1 COM WALL ABSD SOL BTU/HR	SUNSP-1 COM WALL CONDUCTN BTU/HR	SUNSP-1 SUNSPACE VENT FLW CFM
	----(17)	----(18)	----(62)	----(58)	----(59)	----(60)	----(63)
7 6 1	-999.0	999.0	0.0	0.	84.	137.	0.0
7 6 2	-999.0	999.0	0.0	0.	84.	134.	0.0
7 6 3	-999.0	999.0	0.0	0.	83.	129.	0.0
7 6 4	-999.0	999.0	0.0	0.	93.	129.	0.0
7 6 5	-999.0	999.0	0.0	0.	84.	117.	0.0
7 6 6	-999.0	999.0	0.0	0.	84.	109.	0.0
7 6 7	-999.0	999.0	0.0	0.	85.	104.	0.0
7 6 8	-999.0	999.0	0.0	0.	96.	113.	0.0
7 6 9	-999.0	999.0	0.0	0.	101.	126.	0.0
7 610	-999.0	999.0	0.0	0.	98.	131.	357.0
7 611	-999.0	999.0	0.0	0.	98.	134.	404.6
7 612	-999.0	999.0	0.0	0.	98.	141.	404.6
7 613	-999.0	999.0	0.0	0.	103.	150.	428.4
7 614	-999.0	999.0	0.0	0.	101.	154.	476.0
7 615	-999.0	999.0	0.0	0.	104.	159.	428.4
7 616	-999.0	999.0	0.0	0.	103.	160.	476.0
7 617	-999.0	999.0	0.0	0.	102.	160.	476.0
7 618	-999.0	999.0	0.0	0.	102.	160.	476.0
7 619	-999.0	999.0	0.0	0.	103.	160.	357.0
7 620	-999.0	999.0	0.0	0.	100.	159.	142.8
7 621	-999.0	999.0	0.0	0.	98.	157.	23.8
7 622	-999.0	999.0	0.0	0.	98.	155.	0.0
7 623	-999.0	999.0	0.0	0.	101.	152.	0.0
7 624	-999.0	999.0	0.0	0.	98.	149.	0.0
DAILY SUMMARY (JUL 6)							
MN	-999.0	999.0	0.0	0.	83.	104.	0.0
MX	-999.0	999.0	0.0	0.	104.	160.	476.0
SM	-23976.0	23976.0	0.0	0.	2297.	3377.	4450.6
AV	-999.0	999.0	0.0	0.	96.	141.	185.4
MONTHLY SUMMARY (JUL)							
MN	-999.0	999.0	0.0	0.	83.	104.	0.0
MX	-999.0	999.0	0.0	0.	104.	160.	476.0
SM	-23976.0	23976.0	0.0	0.	2297.	3377.	4450.6
AV	-999.0	999.0	0.0	0.	96.	141.	185.4
YEARLY SUMMARY							
MN	-999.0	999.0	0.0	0.	83.	-25.	0.0
MX	-999.0	999.0	200.0	0.	106.	160.	476.0
SM	-47952.0	47952.0	886.1	0.	4693.	4813.	4625.9
AV	-999.0	999.0	18.5	0.	98.	100.	96.4

MMDDHH	SYS-1 CLG COIL AIR TEMP F	SYS-1 ENTERING AIR TEMP F	SYS-1 TOT HTG COIL PWR BTU/HR	SYS-1 TOT CLG COIL PWR BTU/HR	SYS-1 TOTAL ELEC-PWR KW	SYS-1 TOT FAN ELECTRIC KW	SYS-1 SUPPLY ELECTRIC KW	SYS-1 HEATING GAS BTU/HR	SYS-1 COOLING ELECTRIC KW
	----(2)	----(3)	----(5)	----(6)	----(32)	----(33)	----(49)	----(45)	----(47)
125 1	0.0	61.4	0.	0.	0.350	0.000	0.000	100.	0.050
125 2	0.0	57.8	0.	0.	0.350	0.000	0.000	100.	0.050
125 3	0.0	55.6	-1504.	0.	0.353	0.003	0.003	3568.	0.050
125 4	0.0	55.6	-2075.	0.	0.354	0.004	0.004	4403.	0.050
125 5	0.0	55.6	-2518.	0.	0.355	0.005	0.005	5051.	0.050
125 6	0.0	55.6	-2510.	0.	0.565	0.004	0.004	5039.	0.050
125 7	0.0	55.6	-2155.	0.	0.715	0.004	0.004	4521.	0.050
125 8	0.0	55.6	0.	0.	1.372	0.000	0.000	100.	0.050
125 9	0.0	55.6	-14511.	0.	0.857	0.026	0.026	22121.	0.050
12510	0.0	70.5	-7243.	0.	0.544	0.013	0.013	11881.	0.050
12511	0.0	70.6	-1045.	0.	0.549	0.010	0.002	2895.	0.050
12512	0.0	70.6	0.	0.	0.669	0.009	0.000	100.	0.050
12513	0.0	74.6	0.	0.	0.508	0.004	0.000	100.	0.050
12514	0.0	74.4	0.	0.	0.446	0.003	0.000	100.	0.050
12515	0.0	74.6	0.	0.	0.448	0.004	0.000	100.	0.050
12516	0.0	74.4	0.	0.	0.452	0.006	0.000	100.	0.050
12517	0.0	74.4	0.	0.	0.641	0.010	0.000	100.	0.050
12518	0.0	73.2	0.	0.	0.697	0.008	0.000	100.	0.050
12519	0.0	70.6	-3029.	0.	0.746	0.005	0.005	5797.	0.050
12520	0.0	70.6	-3763.	0.	1.168	0.007	0.007	6864.	0.050
12521	0.0	70.6	-4279.	0.	1.169	0.008	0.008	7613.	0.050
12522	0.0	70.6	-5039.	0.	1.170	0.009	0.009	8712.	0.050
12523	0.0	70.6	0.	0.	1.161	0.000	0.000	100.	0.050
12524	0.0	64.8	0.	0.	1.161	0.000	0.000	100.	0.050
DAILY SUMMARY (JAN 25)									
MN	0.0	55.6	-14511.	0.	0.350	0.000	0.000	100.	0.050
MX	0.0	74.6	0.	0.	1.372	0.026	0.026	22121.	0.050
SM	0.0	1583.7	-49671.	0.	16.801	0.140	0.089	89666.	1.200
AV	0.0	66.0	-2070.	0.	0.700	0.006	0.004	3736.	0.050
MONTHLY SUMMARY (JAN)									
MN	0.0	55.6	-14511.	0.	0.350	0.000	0.000	100.	0.050
MX	0.0	74.6	0.	0.	1.372	0.026	0.026	22121.	0.050
SM	0.0	1583.7	-49671.	0.	16.801	0.140	0.089	89666.	1.200
AV	0.0	66.0	-2070.	0.	0.700	0.006	0.004	3736.	0.050

	SYS-1 CLG COIL AIR TEMP F	SYS-1 ENTERING AIR TEMP F	SYS-1 TOT HTG COIL PWR BTU/HR	SYS-1 TOT CLG COIL PWR BTU/HR	SYS-1 TOTAL ELEC-PWR KW	SYS-1 TOT FAN ELECTRIC KW	SYS-1 SUPPLY ELECTRIC KW	SYS-1 HEATING GAS BTU/HR	SYS-1 COOLING ELECTRIC KW
	----(2)	----(3)	----(5)	----(6)	----(32)	----(33)	----(49)	----(45)	----(47)
7 6 1	0.0	76.5	0.	0.	0.300	0.000	0.000	100.	0.000
7 6 2	0.0	75.6	0.	0.	0.300	0.000	0.000	100.	0.000
7 6 3	0.0	74.7	0.	0.	0.300	0.000	0.000	100.	0.000
7 6 4	0.0	73.7	0.	0.	0.300	0.000	0.000	100.	0.000
7 6 5	0.0	72.6	0.	0.	0.511	0.000	0.000	100.	0.000
7 6 6	0.0	72.6	0.	0.	0.661	0.000	0.000	100.	0.000
7 6 7	0.0	73.9	0.	0.	1.322	0.000	0.000	100.	0.000
7 6 8	0.0	76.8	0.	0.	0.781	0.000	0.000	100.	0.000
7 6 9	0.0	75.4	0.	0.	0.481	0.000	0.000	100.	0.000
7 610	52.1	75.4	0.	2170.	1.036	0.024	0.009	100.	0.517
7 611	50.1	78.2	0.	4759.	1.425	0.034	0.018	100.	0.774
7 612	50.3	78.2	0.	6095.	1.415	0.039	0.023	100.	0.910
7 613	50.5	78.3	0.	7018.	1.459	0.043	0.026	100.	1.008
7 614	50.9	78.3	0.	7468.	1.510	0.048	0.029	100.	1.052
7 615	50.2	78.3	0.	8411.	1.611	0.049	0.032	100.	1.155
7 616	50.4	78.3	0.	8524.	1.807	0.052	0.033	100.	1.166
7 617	50.4	78.3	0.	8446.	1.858	0.051	0.032	100.	1.158
7 618	50.8	78.3	0.	8226.	1.897	0.051	0.032	100.	1.136
7 619	50.5	78.3	0.	8115.	2.266	0.046	0.032	100.	1.094
7 620	50.1	78.3	0.	6562.	2.069	0.030	0.025	100.	0.921
7 621	0.0	78.3	0.	0.	1.113	0.001	0.000	100.	0.000
7 622	50.9	75.4	0.	2869.	1.686	0.013	0.012	100.	0.561
7 623	50.2	78.2	0.	2635.	1.663	0.011	0.010	100.	0.540
7 624	0.0	78.2	0.	0.	0.302	0.001	0.000	100.	0.000
DAILY SUMMARY (JUL 6)									
MN	0.0	72.6	0.	0.	0.300	0.000	0.000	100.	0.000
MX	52.1	78.3	0.	8524.	2.266	0.052	0.033	100.	1.166
SM	657.5	1840.2	0.	81298.	28.074	0.493	0.312	2400.	11.991
AV	27.4	76.7	0.	3387.	1.170	0.021	0.013	100.	0.500
MONTHLY SUMMARY (JUL)									
MN	0.0	72.6	0.	0.	0.300	0.000	0.000	100.	0.000
MX	52.1	78.3	0.	8524.	2.266	0.052	0.033	100.	1.166
SM	657.5	1840.2	0.	81298.	28.074	0.493	0.312	2400.	11.991
AV	27.4	76.7	0.	3387.	1.170	0.021	0.013	100.	0.500
YEARLY SUMMARY									
MN	0.0	55.6	-14511.	0.	0.300	0.000	0.000	100.	0.000
MX	52.1	78.3	0.	8524.	2.266	0.052	0.033	22121.	1.166
SM	657.5	3424.0	-49671.	81298.	44.876	0.633	0.401	92066.	13.191
AV	13.7	71.3	-1035.	1694.	0.935	0.013	0.008	1918.	0.275

MMDDHH	SYS-1 LATENT COOLING BTU/HR ----(48)	SYS-1 PLR COOLING FRAC.OR MULT. ----(61)	SYS-1 PLR HEATING FRAC.OR MULT. ----(62)	SYS-1 COOL-CAP F(WB,DB) FRAC.OR MULT. ----(63)	SYS-1 COOL-SH F(WB,DB) FRAC.OR MULT. ----(64)	SYS-1 EIR F(WB,DB) FRAC.OR MULT. ----(66)	SYS-1 EIR F(PLR) FRAC.OR MULT. ----(67)	SYS-1 EIR BTU/BTU ----(68)	SYS-1 COOLING CAPACITY BTU/HR ----(70)	SYS-1 SENSIBLE CAPACITY BTU/HR ----(71)
125 1	0.	0.000	0.000	0.987	1.369	0.000	0.000	0.0000	23690.	11024.
125 2	0.	0.000	0.000	0.987	1.369	0.000	0.000	0.0000	23690.	10093.
125 3	0.	0.000	0.030	0.987	1.369	0.000	0.000	0.0000	23690.	10044.
125 4	0.	0.000	0.041	0.987	1.369	0.000	0.000	0.0000	23690.	10043.
125 5	0.	0.000	0.050	0.987	1.369	0.000	0.000	0.0000	23690.	10043.
125 6	0.	0.000	0.050	0.987	1.369	0.000	0.000	0.0000	23690.	10043.
125 7	0.	0.000	0.043	0.987	1.369	0.000	0.000	0.0000	23690.	10044.
125 8	0.	0.000	0.009	0.987	1.369	0.000	0.000	0.0000	23690.	10044.
125 9	0.	0.000	0.290	0.987	1.369	0.000	0.000	0.0000	23690.	10045.
12510	0.	0.000	0.145	0.987	1.369	0.000	0.000	0.0000	23690.	16427.
12511	0.	0.000	0.021	0.987	1.369	0.000	0.000	0.0000	23690.	16469.
12512	0.	0.000	0.000	0.987	1.369	0.000	0.000	0.0000	23690.	16505.
12513	0.	0.000	0.000	0.987	1.369	0.000	0.000	0.0000	23690.	18788.
12514	0.	0.000	0.000	0.987	1.369	0.000	0.000	0.0000	23690.	18699.
12515	0.	0.000	0.000	0.987	1.369	0.000	0.000	0.0000	23690.	18790.
12516	0.	0.000	0.000	0.987	1.369	0.000	0.000	0.0000	23690.	18720.
12517	0.	0.000	0.000	0.987	1.369	0.000	0.000	0.0000	23690.	18683.
12518	0.	0.000	0.005	0.987	1.369	0.000	0.000	0.0000	23690.	18020.
12519	0.	0.000	0.061	0.987	1.369	0.000	0.000	0.0000	23690.	16508.
12520	0.	0.000	0.075	0.987	1.369	0.000	0.000	0.0000	23690.	16492.
12521	0.	0.000	0.086	0.987	1.369	0.000	0.000	0.0000	23690.	16488.
12522	0.	0.000	0.101	0.987	1.369	0.000	0.000	0.0000	23690.	16486.
12523	0.	0.000	0.000	0.987	1.369	0.000	0.000	0.0000	23690.	16481.
12524	0.	0.000	0.000	0.987	1.369	0.000	0.000	0.0000	23690.	13036.
DAILY SUMMARY (JAN 25)										
MN	0.	0.000	0.000	0.987	1.369	0.000	0.000	0.0000	23690.	10043.
MX	0.	0.000	0.290	0.987	1.369	0.000	0.000	0.0000	23690.	18790.
SM	0.	0.000	1.008	23.690	32.852	0.000	0.000	0.0000	568563.	348016.
AV	0.	0.000	0.042	0.987	1.369	0.000	0.000	0.0000	23690.	14501.
MONTHLY SUMMARY (JAN)										
MN	0.	0.000	0.000	0.987	1.369	0.000	0.000	0.0000	23690.	10043.
MX	0.	0.000	0.290	0.987	1.369	0.000	0.000	0.0000	23690.	18790.
SM	0.	0.000	1.008	23.690	32.852	0.000	0.000	0.0000	568563.	348016.
AV	0.	0.000	0.042	0.987	1.369	0.000	0.000	0.0000	23690.	14501.

	SYS-1 LATENT COOLING BTU/HR ----(48)	SYS-1 PLR COOLING FRAC.OR MULT. ----(61)	SYS-1 PLR HEATING FRAC.OR MULT. ----(62)	SYS-1 COOL-CAP F(WB,DB) FRAC.OR MULT. ----(63)	SYS-1 COOL-SH F(WB,DB) FRAC.OR MULT. ----(64)	SYS-1 EIR F(WB,DB) FRAC.OR MULT. ----(66)	SYS-1 EIR F(PLR) FRAC.OR MULT. ----(67)	SYS-1 EIR BTU/BTU ----(68)	SYS-1 COOLING CAPACITY BTU/HR ----(70)	SYS-1 SENSIBLE CAPACITY BTU/HR ----(71)
7 6 1	0.	0.000	0.000	0.987	1.369	0.000	0.000	0.0000	23690.	19929.
7 6 2	0.	0.000	0.000	0.987	1.369	0.000	0.000	0.0000	23690.	19415.
7 6 3	0.	0.000	0.000	0.987	1.369	0.000	0.000	0.0000	23690.	18861.
7 6 4	0.	0.000	0.000	0.987	1.369	0.000	0.000	0.0000	23690.	18288.
7 6 5	0.	0.000	0.000	0.987	1.369	0.000	0.000	0.0000	23690.	17653.
7 6 6	0.	0.000	0.000	0.987	1.369	0.000	0.000	0.0000	23690.	17650.
7 6 7	0.	0.000	0.000	0.987	1.369	0.000	0.000	0.0000	23690.	18442.
7 6 8	0.	0.000	0.000	0.987	1.369	0.000	0.000	0.0000	23690.	20088.
7 6 9	0.	0.000	0.000	0.993	1.316	0.000	0.000	0.0000	23836.	18419.
7 610	313.	0.093	0.000	0.976	1.263	0.857	0.206	0.0754	23416.	17574.
7 611	557.	0.204	0.000	0.973	1.380	0.873	0.303	0.1131	23351.	21055.
7 612	734.	0.261	0.000	0.972	1.369	0.881	0.354	0.1331	23321.	20910.
7 613	968.	0.300	0.000	0.973	1.363	0.889	0.388	0.1473	23361.	20821.
7 614	757.	0.322	0.000	0.968	1.341	0.891	0.406	0.1546	23222.	20476.
7 615	961.	0.363	0.000	0.966	1.369	0.900	0.442	0.1700	23189.	20952.
7 616	959.	0.368	0.000	0.966	1.361	0.900	0.447	0.1716	23193.	20829.
7 617	1102.	0.363	0.000	0.970	1.360	0.899	0.442	0.1698	23278.	20819.
7 618	913.	0.354	0.000	0.967	1.344	0.899	0.435	0.1671	23207.	20546.
7 619	778.	0.348	0.000	0.971	1.355	0.873	0.430	0.1603	23294.	20730.
7 620	754.	0.280	0.000	0.978	1.377	0.849	0.370	0.1339	23473.	21075.
7 621	0.	0.000	0.000	0.984	1.372	0.000	0.000	0.0000	23615.	20979.
7 622	366.	0.121	0.000	0.986	1.313	0.820	0.231	0.0809	23654.	18378.
7 623	337.	0.111	0.000	0.988	1.371	0.819	0.222	0.0778	23711.	20917.
7 624	0.	0.009	0.000	0.989	1.356	0.000	0.000	0.0000	23746.	20678.
DAILY SUMMARY (JUL 6)										
MN	0.	0.000	0.000	0.966	1.263	0.000	0.000	0.0000	23189.	17574.
MX	1102.	0.368	0.000	0.993	1.380	0.900	0.447	0.1716	23836.	21075.
SM	9499.	3.497	0.000	23.516	32.560	11.349	4.677	1.7547	564387.	475483.
AV	396.	0.146	0.000	0.980	1.357	0.473	0.195	0.0731	23516.	19812.
MONTHLY SUMMARY (JUL)										
MN	0.	0.000	0.000	0.966	1.263	0.000	0.000	0.0000	23189.	17574.
MX	1102.	0.368	0.000	0.993	1.380	0.900	0.447	0.1716	23836.	21075.
SM	9499.	3.497	0.000	23.516	32.560	11.349	4.677	1.7547	564387.	475483.
AV	396.	0.146	0.000	0.980	1.357	0.473	0.195	0.0731	23516.	19812.
YEARLY SUMMARY										
MN	0.	0.000	0.000	0.966	1.263	0.000	0.000	0.0000	23189.	10043.
MX	1102.	0.368	0.290	0.993	1.380	0.900	0.447	0.1716	23836.	21075.
SM	9499.	3.497	1.008	47.206	65.412	11.349	4.677	1.7547	1132950.	823499.
AV	198.	0.073	0.021	0.983	1.363	0.236	0.097	0.0366	23603.	17156.

MMDDHH	PLANT-1 COOLING LOAD BTU/HR ----(1)	PLANT-1 HEATING LOAD BTU/HR ----(2)	PLANT-1 ELECTRIC LOAD KW ----(3)
125 1	0.	0.	0.350
125 2	0.	0.	0.350
125 3	0.	0.	0.353
125 4	0.	0.	0.354
125 5	0.	0.	0.355
125 6	0.	0.	0.565
125 7	0.	0.	0.715
125 8	0.	0.	1.372
125 9	0.	0.	0.857
12510	0.	0.	0.544
12511	0.	0.	0.549
12512	0.	0.	0.669
12513	0.	0.	0.508
12514	0.	0.	0.446
12515	0.	0.	0.448
12516	0.	0.	0.452
12517	0.	0.	0.641
12518	0.	0.	0.697
12519	0.	0.	0.746
12520	0.	0.	1.168
12521	0.	0.	1.169
12522	0.	0.	1.170
12523	0.	0.	1.161
12524	0.	0.	1.161
DAILY SUMMARY (JAN 25)			
MN	0.	0.	0.350
MX	0.	0.	1.372
SM	0.	0.	16.801
AV	0.	0.	0.700
MONTHLY SUMMARY (JAN)			
MN	0.	0.	0.350
MX	0.	0.	1.372
SM	0.	0.	16.801
AV	0.	0.	0.700

SYS-REP-2 = HOURLY-REPORT

	PLANT-1 COOLING LOAD BTU/HR ----(1)	PLANT-1 HEATING LOAD BTU/HR ----(2)	PLANT-1 ELECTRIC LOAD KW ----(3)
7 6 1	0.	0.	0.300
7 6 2	0.	0.	0.300
7 6 3	0.	0.	0.300
7 6 4	0.	0.	0.300
7 6 5	0.	0.	0.511
7 6 6	0.	0.	0.661
7 6 7	0.	0.	1.322
7 6 8	0.	0.	0.781
7 6 9	0.	0.	0.481
7 610	0.	0.	1.036
7 611	0.	0.	1.425
7 612	0.	0.	1.415
7 613	0.	0.	1.459
7 614	0.	0.	1.510
7 615	0.	0.	1.611
7 616	0.	0.	1.807
7 617	0.	0.	1.858
7 618	0.	0.	1.897
7 619	0.	0.	2.266
7 620	0.	0.	2.069
7 621	0.	0.	1.113
7 622	0.	0.	1.686
7 623	0.	0.	1.663
7 624	0.	0.	0.302
DAILY SUMMARY (JUL 6)			
MN	0.	0.	0.300
MX	0.	0.	2.266
SM	0.	0.	28.074
AV	0.	0.	1.170
MONTHLY SUMMARY (JUL)			
MN	0.	0.	0.300
MX	0.	0.	2.266
SM	0.	0.	28.074
AV	0.	0.	1.170
YEARLY SUMMARY			
MN	0.	0.	0.300
MX	0.	0.	2.266
SM	0.	0.	44.876
AV	0.	0.	0.935

Parameterized Building

Input before macro processing

```
INPUT FOR PARAMETRIZED BUILDING BEFORE MACRO PROCESSING
=======================================================

$----- file : samp7.inp ----------- DOE2.1E sample run 7 -----------------------
$----- Parametrized building using Input Macros

$$write

input  LOADS ..
$$includesilent  samp7loc.inc

   run-period  JAN 1 1981  THRU  DEC 31 1981  ..
   loads-report verification=(LV-B,LV-D,LV-F) ..

   LOCATION[chicago]  azimuth = 0 ..

WA-1-2 =  layers   material = (WD01,PW03,IN02,GP01)  ..
RB-1-1 =  layers   material = (RG01,BR01,IN22,WD01)  i-f-r = .76  ..
WALL-typ1 =  construction       layers = WA-1-2  ..
ROOF-typ1 =  construction       layers = RB-1-1  ..
IWF-typ1  =  construction       u = 0.5   ..
FLOOR-typ1=  construction       u = 0.05  ..
GT-typ1   =  glass-type         p=1  s-c=.60 ..

$-----SPACE CONDITIONS-----$

OCC-SCH=        schedule  THRU DEC 31 (WD) (1,7)(0) (8,17)(1) (18,24)(0)
                                      (WEH)(1,24)(0) ..
CORE-LITE-SCH=  schedule  THRU DEC 31 (WD) (1,6)(0) (7,18)(1) (19,24)(0)
                                      (WEH)(1,24)(0) ..
INF-SCH=        schedule  THRU DEC 31 (WD) (1,7)(0) (8,17)(1) (18,24)(0)
                                      (WEH)(1,24)(0) ..
PERIM-LITE-SCH= schedule  THRU DEC 31 (WD) (1,6)(0) (7,18)(.8) (19,24)(0)
                                      (WEH)(1,24)(0) ..

CORE=   space-conditions  t = (75)
                        people-schedule = OCC-SCH  people-heat-gain = 450
                            area/person = 100
                        lighting-schedule = CORE-LITE-SCH
                            lighting-w/sqft = 2
                            light-to-space = .75  light-to-return = .25
                        inf-method = AIR-CHANGE   inf-schedule = INF-SCH
                            air-changes/hr = 0.8
                        z-type = CONDITIONED     ..
PERIM=  space-conditions  like CORE
                        area/person = 90
                        lighting-schedule = PERIM-LITE-SCH
                        air-changes/hr = 0.6  ..

$------ set some macros for glass type and constructions.

$$set1  GLASS_TYPE  GT-typ1
$$set1  EW_CONS     WALL-typ1
$$set1  IW_CONS     IWF-typ1
$$set1  ROOF_CONS   ROOF-typ1
$$set1  UGF_CONS    FLOOR-typ1

$$include  samp7lib.inc

$$$---- now generate each floor.
$$$
$$$    #   W    D    H   perim_D  window      space conditions for
$$$                               frac    core  north  south  east   west
$$$   -- ---  ---  ---   -------  -----  -----  -----  -----  -----  -----
```

```
$
$----- ground floor
FLOOR[ g, 100,  50,  10,    15  , .20,    CORE, PERIM, PERIM, PERIM, PERIM ]
$----- 1st    floor
FLOOR[ 1, 100,  50,  10,    15  , .30,    CORE, PERIM, PERIM, PERIM, PERIM ]
$----- top floor
FLOOR[ t, 100,  50,  10,    15  , .30,    CORE, PERIM, PERIM, PERIM, PERIM ]

end ..
compute LOADS ..
stop ..
```

Parameterized Building

Include file for building location

```
INCLUDE FILE FOR BUILDING LOCATION FOR PARAMETRIZED BUILDING
============================================================

$$$ file : samp7loc.inc
$$$
$$$      This file contains the LOCATION[Name] macro, that produces the
$$$        'building-location' command.  Here 'Name' is the name of the
$$$        city.
$$$      An example of usage is :
$$$                                LOCATION[chicago]  azimuth = 0 ..
$$$
$$def  LOCATION[Name]
$$nolist
 building-location
$$if    $[Name eqs boston]
              lat = 42.37  lon = 71.07   alt = 50    t-z = 5
$$elseif $[Name eqs newyork]
              lat = 40.72  lon = 74.00   alt = 50    t-z = 5
$$elseif $[Name eqs philadelphia]
              lat = 39.95  lon = 75.17   alt = 50    t-z = 5
$$elseif $[Name eqs detroit]
              lat = 42.33  lon = 83.00   alt = 600   t-z = 5
$$elseif $[Name eqs chicago]
              lat = 41.88  lon = 87.63   alt = 600   t-z = 6
$$elseif $[Name eqs sanfrancisco]
              lat = 37.78  lon = 122.42  alt = 50    t-z = 8
$$elseif $[Name eqs losangeles]
              lat = 34.07  lon = 118.25  alt = 50    t-z = 8
$$elseif $[Name eqs sandiego]
              lat = 32.72  lon = 117.15  alt = 50    t-z = 8
$$elseif $[Name eqs phoenix]
              lat = 33.45  lon = 112.07  alt = 1000  t-z = 7
$$else
Abort -- building location undefined in file : samp7loc.inc
$$endif

$$$ defaults for all locations:
    hol = YES  daylight-savings = YES
$$list
$$enddef
```

Include file for floor and space macros

```
INCLUDE FILE FOR FLOOR AND PERIMETER SPACE MACROS FOR PARAMETRIZED BUILDING
===========================================================================

$$$ file : samp7lib.inc
$$$
$$$      This file contains the FLOOR[...] and PERIM-SPACE[...] macros.
$$$      The FLOOR[...] macro is used for specifying one floor of the
$$$          building with given dimensions.  It uses the PERIM-SPACE[...]
$$$          macro to create the perimeter spaces.
$$$
$$$-----------------------------------------------------------------------
$$$ The following macro defines one floor of the building.
$$$     Its arguments are :
$$$         floor_NUM : g for ground floor; 1 for first floor ;
$$$                     2 for second floor; etc. ; t for top floor .
$$$                     s for single floor building.
$$$         floor_W   : floor width.
$$$         floor_D   : floor depth.
$$$         floor_H   : floor height.
$$$         floor_perim_D : depth of the perimeter spaces.
$$$         floor_winFrac : window to wall ratio for exterior surfaces.
$$$         cond_C    : u-name of space conditions for the interior space.
```

```
00$         cond_N    : u-name of space conditions for the north space.
00$ In addition, the following macros must be set to define glass type,
00$     and wall constructions:
00$                     GLASS_TYPE  glass type of windows.
00$                     EW_CONS     exterior-wall construction.
00$                     IW_CONS     interior-wall construction.
00$                     ROOF_CONS   roof construction.
00$                     UGF_CONS    underground-wall,floor construction.
00$                     WINDOW_HEIGHT  window height. ( default = 3.0 )
00$-----------------------------------------------------------------------
00$
00def FLOOR[floor_NUM,floor_W,floor_D,floor_H,floor_perim_D,floor_winFrac
        ,cond_C, cond_N, cond_S, cond_E, cond_W]
 00$
 00$                                  --->|      |<--- floor_perim_D
 00$
 00$
 00$            ----------WWWWWWWWWWWWW----------
 00$            |\                              /|       ^
 00$            |  \            _N            /  |       |
 00$            |    \                      /    |       |
 00$            |     -------------------        |       |
 00$            W     |                 |       W       |
 00$            W     |                 |       W       |
 00$            W  _W |        _C       |  _E   W     floor_D
 00$            W     |                 |       W       |
 00$            W     |                 |       W       |
 00$            |     -------------------        |       |
 00$            |    /                      \    |       |
 00$            |  /            _S            \  |       |
 00$            |/                              \|       v
 00$            ----------WWWWWWWWWWWWW----------
 00$
 00$
 00$             <--------      floor_W ------->
00$
 00ifndef  WINDOW_HEIGHT
   00set1  WINDOW_HEIGHT  3.0
 00endif
00$
 00ifndef  Z-SP
   00set1  Z-SP  0
 00endif
00$
 00set1  FLOOR-HEIGHT  floor_H
 00set1  FLOOR-NUM     floor_NUM
 00set1  FLOOR-PERIM-D floor_perim_D
00$
 00set1  SP-NAM0  0["SP_" // floor_NUM]
00$
 00set1  AREA-SP  0[ floor_perim_D * 0[ floor_W - floor_perim_D ] ]
 0[SP-NAM0[] // "_N"] =  PERIM-SPACE[ _N, floor_W, floor_D, Z-SP[],180
                                    , AREA-SP[], floor_W, floor_winFrac
                                    , cond_N ]

 0[SP-NAM0[] // "_S"] =  PERIM-SPACE[ _S, 0, 0, Z-SP[],  0
                                    , AREA-SP[], floor_W, floor_winFrac
                                    , cond_S ]

 00set1  AREA-SP  0[floor_perim_D * 0[ floor_D - floor_perim_D ] ]
 0[SP-NAM0[] // "_E"] =  PERIM-SPACE[ _E, floor_W, 0, Z-SP[], -90
                                    , AREA-SP[], floor_D, floor_winFrac
                                    , cond_E ]
     00set1  AREA-IW  0[ 1.4142 * 0[ floor_perim_D * floor_H ] ]
     00if  0[AREA-IW[] GT 0 ]
```

```
                    interior-wall  area = AREA-IW[]
                                   next-to = $[ SP-NAM0[] // "_N" ]
                                   construction = IW_CONS[]  ..
                    interior-wall  area = AREA-IW[]
                                   next-to = $[ SP-NAM0[] // "_S" ]
                                   construction = IW_CONS[]  ..
    $$endif

$[SP-NAM0[] // "_W"] =  PERIM-SPACE[ _W, 0, floor_D, Z-SP[], 90
                                  , AREA-SP[], floor_D, floor_winFrac
                                  , cond_W ]
    $$if  $[AREA-IW[] GT 0 ]
                    interior-wall  area = AREA-IW[]
                                   next-to = $[ SP-NAM0[] // "_N" ]
                                   construction = IW_CONS[]  ..
                    interior-wall  area = AREA-IW[]
                                   next-to = $[ SP-NAM0[] // "_S" ]
                                   construction = IW_CONS[]  ..
    $$endif

$-------- Core space --------$
$$set1  TMP1  $[ 2 * floor_perim_D ]
$$set1  AREA-SP  $[ $[floor_W - TMP1[]] * $[floor_D - TMP1[]] ]
$$if $[ AREA-SP[] GT 0 ]
    $[SP-NAM0[] // "_C"] =  space  x = floor_perim_D  y = floor_perim_D
                                   z = Z-SP[]  azimuth = 0  area = AREA-SP[]
                                   volume = $[ AREA-SP[] * FLOOR-HEIGHT[] ]
                                   space-conditions=cond_C  ..
        interior-wall  area = $[ $[floor_W - TMP1[]] * floor_H ]
                       next-to = $[ SP-NAM0[] // "_S" ]
                       construction = IW_CONS[]  ..
        interior-wall  area = $[ $[floor_W - TMP1[]] * floor_H ]
                       next-to = $[ SP-NAM0[] // "_N" ]
                       construction = IW_CONS[]  ..
        interior-wall  area = $[ $[floor_D - TMP1[]] * floor_H ]
                       next-to = $[ SP-NAM0[] // "_E" ]
                       construction = IW_CONS[]  ..
        interior-wall  area = $[ $[floor_D - TMP1[]] * floor_H ]
                       next-to = $[ SP-NAM0[] // "_W" ]
                       construction = IW_CONS[]  ..

        $$if $[ floor_NUM EQS "g" ]
          underground-floor  area = AREA-SP[]  construction = UGF_CONS[] ..
        $$else
          interior-wall      area = AREA-SP[]
                             next-to = $[ $["SP_" // FLOOR-PREV[]] // "_C"]
                             construction = IW_CONS[]  ..
        $$endif

        $$if $[ floor_NUM EQS "t" ]
          roof           x = floor_perim_D  y = floor_perim_D
                         h = $[floor_D - $[ 2 * floor_perim_D ] ]
                         w = $[floor_W - $[ 2 * floor_perim_D ] ]
                         construction = ROOF_CONS[]  ..
        $$endif
 $$endif
 $$$
 $$$ update the z-coordinate.
 $$set1  Z-SP  $[ Z-SP[] + FLOOR-HEIGHT[] ]
 $$set1  FLOOR-PREV  floor_NUM
 $$$
$$enddef

$$$
$$$-----------------------------------------------------------------------
```

```
@@$ The following macro defines one perimeter space.
@@$     Its arguments are :
@@$         sname :       part of the name of space.  ( N, S, E, W )
@@$         xx,yy,zz :    x, y, z  location of the space.
@@$         sazim :       space azimuth.
@@$         sarea :       space area.
@@$         swidth :      space width.
@@$         swinFrac :    window to wall ratio of exterior surfaces.
@@$         space_cond : u-name of space conditions.
@@$ This macro uses the FLOOR-NUM[], FLOOR-HEIGHT[] and WINDOW_HEIGHT[]
@@$     that are set by the FLOOR macro.
@@$ It also uses :
@@$     GLASS_TYPE macro to set the glass-type of windows.
@@$     EW_CONS    macro to set the exterior-wall construction.
@@$     IW_CONS    macro to set the interior-wall construction.
@@$     ROOF_CONS  macro to set the roof construction.
@@$     UGF_CONS   macro to set the underground-wall,floor construction.
@@$-----------------------------------------------------------------------
@@$
@@def PERIM-SPACE[sname,xx,yy,zz,sazim,sarea,swidth,swinFrac,space_cond]

   space              x = xx  y = yy  z = zz  azimuth = sazim  area = sarea
                      volume = @[ sarea * FLOOR-HEIGHT[] ]
                      space-conditions = space_cond  ..
       exterior-wall  x = 0  y = 0  azimuth = 0  h = FLOOR-HEIGHT[]
                      w = swidth  construction = EW_CONS[]  ..
 @@set1 TMP1 @[ @[swinFrac * @[FLOOR-HEIGHT[] * swidth]] / WINDOW_HEIGHT[]]
 @@if @[ TMP1[] GT 0 ]
        window        x = @[ @[swidth - TMP1[]] / 2 ]
                      y = 3.0
                      w = TMP1[]  h = WINDOW_HEIGHT[]
                      glass-type = GLASS_TYPE[]  ..
 @@endif

 @@if @[ @[FLOOR-NUM[] EQS "g"] or @[FLOOR-NUM[] EQS "s"] ]
       underground-floor  area = sarea  construction = UGF_CONS[] ..
 @@else
       interior-wall    area = sarea  construction = IW_CONS[]
                        next-to = @[ @["SP_" // FLOOR-PREV[]] // sname ]  ..
 @@endif

 @@if @[ @[FLOOR-NUM[] EQS "t"] or @[FLOOR-NUM[] EQS "s"] ]
       roof  x = 0  y = 0
             h = FLOOR-PERIM-D[]
             w = @[ swidth - FLOOR-PERIM-D[] ]
             construction = ROOF_CONS[] ..
 @@endif
 @@$
@@enddef
```

Parameterized Building

Input showing macro evaluation steps

```
INPUT FOR PARAMETRIZED BUILDING SHOWING INTERMEDIATE STEPS OF MACRO EVALUATION
==============================================================================


*   1 * $----- file : samp7.inp ----------- DOE2.1E sample run 7 -----------------------
*   2 * $----- Parametrized building using Input Macros
*   3 *
@   4 @ @@write
*   5 *
*   6 * input  LOADS ..
```

L D L P R O C E S S O R I N P U T D A T A

Thu Nov 11 11:14:58 1993LDL RUN 1

```
     0   7 0 00includesilent  samp7loc.inc
file : INPUT2.TMP
     *   8 *
     *   9 *     run-period  JAN 1 1981  THRU  DEC 31 1981  ..
     *  10 *     loads-report verification=(LV-B,LV-D,LV-F) ..
     *  11 *
     *  12 *     LOCATION[chicago]  azimuth = 0 ..
   .10  36 0 00list
     *  13 *
     *  14 * WA-1-2 =  layers   material = (WD01,PW03,IN02,GP01)  ..
     *  15 * RB-1-1 =  layers   material = (RG01,BR01,IN22,WD01)  i-f-r = .76  ..
     *  16 * WALL-typ1 =  construction       layers = WA-1-2  ..
     *  17 * ROOF-typ1 =  construction       layers = RB-1-1  ..
     *  18 * IWF-typ1  =  construction       u = 0.5   ..
     *  19 * FLOOR-typ1=  construction       u = 0.05  ..
     *  20 * GT-typ1   =  glass-type         p=1  s-c=.60 ..
     *  21 *
     *  22 * $-----SPACE CONDITIONS-----$
     *  23 *
     *  24 * OCC-SCH=        schedule  THRU DEC 31 (WD) (1,7)(0) (8,17)(1) (18,24)(0)
     *  25 *                                       (WEH)(1,24)(0) ..
     *  26 * CORE-LITE-SCH=  schedule  THRU DEC 31 (WD) (1,6)(0) (7,18)(1) (19,24)(0)
     *  27 *                                       (WEH)(1,24)(0) ..
     *  28 * INF-SCH=        schedule  THRU DEC 31 (WD) (1,7)(0) (8,17)(1) (18,24)(0)
     *  29 *                                       (WEH)(1,24)(0) ..
     *  30 * PERIM-LITE-SCH= schedule  THRU DEC 31 (WD) (1,6)(0) (7,18)(.8) (19,24)(0)
     *  31 *                                       (WEH)(1,24)(0) ..
     *  32 *
     *  33 * CORE=   space-conditions  t = (75)
     *  34 *                           people-schedule = OCC-SCH  people-heat-gain = 450
     *  35 *                               area/person = 100
     *  36 *                           lighting-schedule = CORE-LITE-SCH
     *  37 *                               lighting-w/sqft = 2
     *  38 *                               light-to-space = .75  light-to-return = .25
     *  39 *                           inf-method = AIR-CHANGE   inf-schedule = INF-SCH
     *  40 *                               air-changes/hr = 0.8
     *  41 *                           z-type = CONDITIONED     ..
     *  42 * PERIM=  space-conditions  like CORE
     *  43 *                           area/person = 90
     *  44 *                           lighting-schedule = PERIM-LITE-SCH
     *  45 *                           air-changes/hr = 0.6  ..
     *  46 *
     *  47 * $------ set some macros for glass type and constructions.
     *  48 *
     0  49 0 00set1  GLASS_TYPE  GT-typ1
     0  50 0 00set1  EW_CONS     WALL-typ1
     0  51 0 00set1  IW_CONS     IWF-typ1
     0  52 0 00set1  ROOF_CONS   ROOF-typ1
     0  53 0 00set1  UGF_CONS    FLOOR-typ1
     *  54 *
     0  55 0 00include  samp7lib.inc
1    0   1 0 00$ file : samp7lib.inc
1    0   2 0 00$
1    0   3 0 00$      This file contains the FLOOR[...] and PERIM-SPACE[...] macros.
1    0   4 0 00$      The FLOOR[...] macro is used for specifying one floor of the
1    0   5 0 00$          building with given dimensions.  It uses the PERIM-SPACE[...]
1    0   6 0 00$          macro to create the perimeter spaces.
```

```
1    0    0 00$
1    0    0 00$----------------------------------------------------------------------
1    0    0 00$ The following macro defines one floor of the building.
1    0    0 00$      Its arguments are :
1    0    0 00$           floor_NUM : g for ground floor; 1 for first floor ;
1    0    0 00$                        2 for second floor; etc. ; t for top floor .
1    0    0 00$                        s for single floor building.
1    0    0 00$           floor_W   : floor width.
1    0    0 00$           floor_D   : floor depth.
1    0    0 00$           floor_H   : floor height.
1    0    0 00$           floor_perim_D : depth of the perimeter spaces.
1    0    0 00$           floor_winFrac : window to wall ratio for exterior surfaces.
1    0    0 00$           cond_C    : u-name of space conditions for the interior space.
1    0    0 00$           cond_N    : u-name of space conditions for the north space.
1    0    0 00$ In addition, the following macros must be set to define glass type,
1    0    0 00$      and wall constructions:
1    0    0 00$                      GLASS_TYPE  glass type of windows.
1    0    0 00$                      EW_CONS     exterior-wall construction.
1    0    0 00$                      IW_CONS     interior-wall construction.
1    0    0 00$                      ROOF_CONS   roof construction.
1    0    0 00$                      UGF_CONS    underground-wall,floor construction.
1    0    0 00$                      WINDOW_HEIGHT  window height. ( default = 3.0 )
1    0    0 00$----------------------------------------------------------------------
1    0    0 00$
1    0    0 00def FLOOR[floor_NUM,floor_W,floor_D,floor_H,floor_perim_D,floor_winFrac
1    0    0          ,cond_C, cond_N, cond_S, cond_E, cond_W]
1    0    0   00$
1    0    0   00$                                 --->|      |<--- floor_perim_D
1    0    0   00$
1    0    0   00$
1    0    0   00$              ----------WWWWWWWWWWWWW----------
1    0    0   00$              |\                           /|      ^
1    0    0   00$              | \             _N          / |      |
1    0    0   00$              |  \                       /  |      |
1    0    0   00$              |    -------------------      |      |
1    0    0   00$              W    |                 |      W      |
1    0    0   00$              W    |                 |      W      |
1    0    0   00$              W  _W |       _C        | _E  W   floor_D
1    0    0   00$              W    |                 |      W      |
1    0    0   00$              W    |                 |      W      |
1    0    0   00$              |    -------------------      |      |
1    0    0   00$              |  /                       \  |      |
1    0    0   00$              | /             _S          \ |      |
1    0    0   00$              |/                           \|      v
1    0    0   00$              ----------WWWWWWWWWWWWW----------
1    0    0   00$
1    0    0   00$
1    0    0   00$              <--------      floor_W ------->
1    0    0 00$
1    0    0   00ifndef  WINDOW_HEIGHT
1    0    0     00set1  WINDOW_HEIGHT  3.0
1    0    0   00endif
1    0    0 00$
1    0    0   00ifndef  Z-SP
1    0    0     00set1  Z-SP  0
1    0    0   00endif
1    0    0 00$
1    0    0   00set1  FLOOR-HEIGHT   floor_H
1    0    0   00set1  FLOOR-NUM      floor_NUM
1    0    0   00set1  FLOOR-PERIM-D floor_perim_D
1    0    0 00$
1    0    0   00set1  SP-NAM0  0["SP_" // floor_NUM]
1    0    0 00$
1    0    0   00set1  AREA-SP  0[ floor_perim_D * 0[ floor_W - floor_perim_D ] ]
1    0    0   0[SP-NAM0[] // "_N"] =  PERIM-SPACE[ _N, floor_W, floor_D, Z-SP[],180
```

```
1    0  72 0                                    , AREA-SP[], floor_W, floor_winFrac
1    0  73 0                                    , cond_N ]
1    0  74 0
1    0  75 0   0[SP-NAM0[] // °_S°] =  PERIM-SPACE[ _S, 0, 0, Z-SP[],  0
1    0  76 0                                    , AREA-SP[], floor_W, floor_winFrac
1    0  77 0                                    , cond_S ]
1    0  78 0
1    0  79 0   00set1  AREA-SP  0[floor_perim_D * 0[ floor_D - floor_perim_D ] ]
1    0  80 0   0[SP-NAM0[] // °_E°] =  PERIM-SPACE[ _E, floor_W, 0, Z-SP[], -90
1    0  81 0                                    , AREA-SP[], floor_D, floor_winFrac
1    0  82 0                                    , cond_E ]
1    0  83 0       00set1  AREA-IW  0[ 1.4142 * 0[ floor_perim_D * floor_H ] ]
1    0  84 0       00if  0[AREA-IW[] GT 0 ]
1    0  85 0                          interior-wall  area = AREA-IW[]
1    0  86 0                                         next-to = 0[ SP-NAM0[] // °_N° ]
1    0  87 0                                         construction = IW_CONS[]  ..
1    0  88 0                          interior-wall  area = AREA-IW[]
1    0  89 0                                         next-to = 0[ SP-NAM0[] // °_S° ]
1    0  90 0                                         construction = IW_CONS[]  ..
1    0  91 0       00endif
1    0  92 0
1    0  93 0   0[SP-NAM0[] // °_W°] =  PERIM-SPACE[ _W, 0, floor_D, Z-SP[], 90
1    0  94 0                                    , AREA-SP[], floor_D, floor_winFrac
1    0  95 0                                    , cond_W ]
1    0  96 0       00if  0[AREA-IW[] GT 0 ]
1    0  97 0                          interior-wall  area = AREA-IW[]
1    0  98 0                                         next-to = 0[ SP-NAM0[] // °_N° ]
1    0  99 0                                         construction = IW_CONS[]  ..
1    0 100 0                          interior-wall  area = AREA-IW[]
1    0 101 0                                         next-to = 0[ SP-NAM0[] // °_S° ]
1    0 102 0                                         construction = IW_CONS[]  ..
1    0 103 0       00endif
1    0 104 0
1    0 105 0   $-------- Core space --------$
1    0 106 0   00set1  TMP1  0[ 2 * floor_perim_D ]
1    0 107 0   00set1  AREA-SP  0[ 0[floor_W - TMP1[]] * 0[floor_D - TMP1[]] ]
1    0 108 0   00if 0[ AREA-SP[] GT 0 ]
1    0 109 0       0[SP-NAM0[] // °_C°] =  space  x = floor_perim_D  y = floor_perim_D
1    0 110 0                                     z = Z-SP[] azimuth = 0  area = AREA-SP[]
1    0 111 0                                     volume = 0[ AREA-SP[] * FLOOR-HEIGHT[] ]
1    0 112 0                                     space-conditions=cond_C  ..
1    0 113 0           interior-wall  area = 0[ 0[floor_W - TMP1[]] * floor_H ]
1    0 114 0                          next-to = 0[ SP-NAM0[] // °_S° ]
1    0 115 0                          construction = IW_CONS[]  ..
1    0 116 0           interior-wall  area = 0[ 0[floor_W - TMP1[]] * floor_H ]
1    0 117 0                          next-to = 0[ SP-NAM0[] // °_N° ]
1    0 118 0                          construction = IW_CONS[]  ..
1    0 119 0           interior-wall  area = 0[ 0[floor_D - TMP1[]] * floor_H ]
1    0 120 0                          next-to = 0[ SP-NAM0[] // °_E° ]
1    0 121 0                          construction = IW_CONS[]  ..
1    0 122 0           interior-wall  area = 0[ 0[floor_D - TMP1[]] * floor_H ]
1    0 123 0                          next-to = 0[ SP-NAM0[] // °_W° ]
1    0 124 0                          construction = IW_CONS[]  ..
1    0 125 0
1    0 126 0           00if 0[ floor_NUM EQS °g° ]
1    0 127 0             underground-floor  area = AREA-SP[]  construction = UGF_CONS[] ..
1    0 128 0           00else
1    0 129 0             interior-wall      area = AREA-SP[]
1    0 130 0                                next-to = 0[ 0[°SP_° // FLOOR-PREV[]] // °_C°]
1    0 131 0                                construction = IW_CONS[]  ..
1    0 132 0           00endif
1    0 133 0
1    0 134 0           00if 0[ floor_NUM EQS °t° ]
1    0 135 0             roof          x = floor_perim_D  y = floor_perim_D
1    0 136 0                           h = 0[floor_D - 0[ 2 * floor_perim_D ] ]
```

```
1    0 137 0                          w = 0[floor_W - 0[ 2 * floor_perim_D ] ]
1    0 138 0                          construction = ROOF_CONS[]  ..
1    0 139 0            00endif
1    0 140 0    00endif
1    0 141 0    00$
1    0 142 0    00$ update the z-coordinate.
1    0 143 0    00set1  Z-SP  0[ Z-SP[] + FLOOR-HEIGHT[] ]
1    0 144 0    00set1  FLOOR-PREV  floor_NUM
1    0 145 0    00$
1    0 146 0 00enddef
1    * 147 *
1    0 148 0 00$
1    0 149 0 00$-----------------------------------------------------------------
1    0 150 0 00$ The following macro defines one perimeter space.
1    0 151 0 00$     Its arguments are :
1    0 152 0 00$         sname :       part of the name of space.  ( N, S, E, W )
1    0 153 0 00$         xx,yy,zz :    x, y, z  location of the space.
1    0 154 0 00$         sazim :       space azimuth.
1    0 155 0 00$         sarea :       space area.
1    0 156 0 00$         swidth :      space width.
1    0 157 0 00$         swinFrac :    window to wall ratio of exterior surfaces.
1    0 158 0 00$         space_cond : u-name of space conditions.
1    0 159 0 00$ This macro uses the FLOOR-NUM[], FLOOR-HEIGHT[] and WINDOW_HEIGHT[]
1    0 160 0 00$     that are set by the FLOOR macro.
1    0 161 0 00$ It also uses :
1    0 162 0 00$     GLASS_TYPE macro to set the glass-type of windows.
1    0 163 0 00$     EW_CONS    macro to set the exterior-wall construction.
1    0 164 0 00$     IW_CONS    macro to set the interior-wall construction.
1    0 165 0 00$     ROOF_CONS  macro to set the roof construction.
1    0 166 0 00$     UGF_CONS   macro to set the underground-wall,floor construction.
1    0 167 0 00$-----------------------------------------------------------------
1    0 168 0 00$
1    0 169 0 00def PERIM-SPACE[sname,xx,yy,zz,sazim,sarea,swidth,swinFrac,space_cond]
1    0 170 0
1    0 171 0     space              x = xx  y = yy  z = zz  azimuth = sazim  area = sarea
1    0 172 0                        volume = 0[ sarea * FLOOR-HEIGHT[] ]
1    0 173 0                        space-conditions = space_cond  ..
1    0 174 0         exterior-wall  x = 0  y = 0  azimuth = 0  h = FLOOR-HEIGHT[]
1    0 175 0                        w = swidth  construction = EW_CONS[]  ..
1    0 176 0    00set1 TMP1 0[ 0[swinFrac * 0[FLOOR-HEIGHT[] * swidth]] / WINDOW_HEIGHT[]]
1    0 177 0    00if 0[ TMP1[] GT 0 ]
1    0 178 0            window       x = 0[ 0[swidth - TMP1[]] / 2 ]
1    0 179 0                         y = 3.0
1    0 180 0                         w = TMP1[]  h = WINDOW_HEIGHT[]
1    0 181 0                         glass-type = GLASS_TYPE[]  ..
1    0 182 0    00endif
1    0 183 0
1    0 184 0    00if 0[ 0[FLOOR-NUM[] EQS "g"] or 0[FLOOR-NUM[] EQS "s"] ]
1    0 185 0         underground-floor  area = sarea  construction = UGF_CONS[] ..
1    0 186 0    00else
1    0 187 0         interior-wall     area = sarea  construction = IW_CONS[]
1    0 188 0                           next-to = 0[ 0["SP_" // FLOOR-PREV[]] // sname ]  ..
1    0 189 0    00endif
1    0 190 0
1    0 191 0    00if 0[ 0[FLOOR-NUM[] EQS "t"] or 0[FLOOR-NUM[] EQS "s"] ]
1    0 192 0         roof  x = 0  y = 0
1    0 193 0               h = FLOOR-PERIM-D[]
1    0 194 0               w = 0[ swidth - FLOOR-PERIM-D[] ]
1    0 195 0               construction = ROOF_CONS[] ..
1    0 196 0    00endif
1    0 197 0 00$
1    0 198 0 00enddef
file : INPUT2.TMP
     *  56 *
     0  57 0 00$---- now generate each floor.
```

```
    0  58 0 00$
    0  59 0 00$     0    W     D     H    perim_D  window       space conditions for
    0  60 0 00$                                   frac     core  north  south  east    west
    0  61 0 00$   -- ---   ---   ---    -------  -----   -----  -----  -----  -----   -----
    *  62 * $
    *  63 * $----- ground floor
    *  64 * FLOOR[ g, 100,  50,  10,     15  ,  .20,     CORE, PERIM, PERIM, PERIM, PERIM ]
  .10  32 0    00$
  .10  33 0    00$                                   --->|       |<--- 15
  .10  34 0    00$
  .10  35 0    00$
  .10  36 0    00$              -----------wwwwwwwwwwwww-----------
  .10  37 0    00$              |\                              /|        ^
  .10  38 0    00$              |  \               _N         /  |        |
  .10  39 0    00$              |    \                      /    |        |
  .10  40 0    00$              |      -------------------       |        |
  .10  41 0    00$              w      |                  |      w        |
  .10  42 0    00$              w      |                  |      w        |
  .10  43 0    00$              w  _W  |        _C        |  _E  w       50
  .10  44 0    00$              w      |                  |      w        |
  .10  45 0    00$              w      |                  |      w        |
  .10  46 0    00$              |      -------------------       |        |
  .10  47 0    00$              |    /                      \    |        |
  .10  48 0    00$              |  /               _S         \  |        |
  .10  49 0    00$              |/                              \|        v
  .10  50 0    00$              -----------wwwwwwwwwwwww-----------
  .10  51 0    00$
  .10  52 0    00$
  .10  53 0    00$                <--------        100       ------->
  .10  54 0 00$
.1.10  55 0    00ifndef  WINDOW_HEIGHT
.1.10  56 0      00set1  WINDOW_HEIGHT  3.0
  .10  57 0    00endif
  .10  58 0 00$
.1.10  59 0    00ifndef  Z-SP
.1.10  60 0      00set1  Z-SP   0
  .10  61 0    00endif
  .10  62 0 00$
  .10  63 0    00set1  FLOOR-HEIGHT  10
  .10  64 0    00set1  FLOOR-NUM      g
  .10  65 0    00set1  FLOOR-PERIM-D 15
  .10  66 0 00$
  .10  67 0    00set1  SP-NAM0  0["SP_" // g]
  .10  68 0 00$
  .10  69 0    00set1  AREA-SP  0[ 15 * 0[ 100 - 15 ] ]
  .1*  70 *    0[SP-NAM0[] // "_N"] =  PERIM-SPACE[ _N, 100, 50, Z-SP[],180
  .1*  71 *                                         , AREA-SP[], 100, .20
  .1*  72 *                                         , PERIM ]
  .2* 170 *
  .2* 171 *      space                x = 100  y = 50  z = Z-SP[]  azimuth = 180  area = AREA-S
  .2* 171 * P[]
  .2* 172 *                           volume = 0[ AREA-SP[] * FLOOR-HEIGHT[] ]
  .2* 173 *                           space-conditions = PERIM  ..
  .2* 174 *          exterior-wall    x = 0  y = 0  azimuth = 0  h = FLOOR-HEIGHT[]
  .2* 175 *                           w = 100  construction = EW_CONS[]  ..
  .20 176 0    00set1 TMP1 0[ 0[.20 * 0[FLOOR-HEIGHT[] * 100]] / WINDOW_HEIGHT[]]
  .20 177 0    00if 0[ TMP1[] GT 0 ]
.1.2* 178 *            window         x = 0[ 0[100 - TMP1[]] / 2 ]
.1.2* 179 *                           y = 3.0
.1.2* 180 *                           w = TMP1[]  h = WINDOW_HEIGHT[]
.1.2* 181 *                           glass-type = GLASS_TYPE[]  ..
  .20 182 0    00endif
  .2* 183 *
  .20 184 0    00if 0[ 0[FLOOR-NUM[] EQS "g"] or 0[FLOOR-NUM[] EQS "s"] ]
.1.2* 185 *          underground-floor  area = AREA-SP[]  construction = UGF_CONS[] ..
```

```
  .20 186 0   00else
.1.2- 187 -         interior-wall    area = AREA-SP[]  construction = IW_CONS[]
.1.2- 188 -                          next-to = 0[ 0["SP_" // FLOOR-PREV[]] // _N ]  ..
  .20 189 0   00endif
  .2* 190 *
  .20 191 0   00if 0[ 0[FLOOR-NUM[] EQS "t"] or 0[FLOOR-NUM[] EQS "s"] ]
.1.2- 192 -         roof  x = 0  y = 0
.1.2- 193 -               h = FLOOR-PERIM-D[]
.1.2- 194 -               w = 0[ 100 - FLOOR-PERIM-D[] ]
.1.2- 195 -               construction = ROOF_CONS[] ..
  .20 196 0   00endif
  .20 197 0 00$
  .1*  73 *
  .1*  74 *   0[SP-NAM0[] // "_S"] =  PERIM-SPACE[ _S, 0, 0, Z-SP[],  0
  .1*  75 *                                        , AREA-SP[], 100, .20
  .1*  76 *                                        , PERIM ]
  .2* 170 *
  .2* 171 *     space              x = 0  y = 0  z = Z-SP[]  azimuth = 0  area = AREA-SP[]
  .2* 172 *                        volume = 0[ AREA-SP[] * FLOOR-HEIGHT[] ]
  .2* 173 *                        space-conditions = PERIM  ..
  .2* 174 *         exterior-wall  x = 0  y = 0  azimuth = 0  h = FLOOR-HEIGHT[]
  .2* 175 *                        w = 100  construction = EW_CONS[]  ..
  .20 176 0   00set1 TMP1 0[ 0[.20 * 0[FLOOR-HEIGHT[] * 100]] / WINDOW_HEIGHT[]]
  .20 177 0   00if 0[ TMP1[] GT 0 ]
.1.2* 178 *           window       x = 0[ 0[100 - TMP1[]] / 2 ]
.1.2* 179 *                        y = 3.0
.1.2* 180 *                        w = TMP1[]  h = WINDOW_HEIGHT[]
.1.2* 181 *                        glass-type = GLASS_TYPE[]  ..
  .20 182 0   00endif
  .2* 183 *
  .20 184 0   00if 0[ 0[FLOOR-NUM[] EQS "g"] or 0[FLOOR-NUM[] EQS "s"] ]
.1.2* 185 *         underground-floor  area = AREA-SP[]  construction = UGF_CONS[] ..
  .20 186 0   00else
.1.2- 187 -         interior-wall    area = AREA-SP[]  construction = IW_CONS[]
.1.2- 188 -                          next-to = 0[ 0["SP_" // FLOOR-PREV[]] // _S ]  ..
  .20 189 0   00endif
  .2* 190 *
  .20 191 0   00if 0[ 0[FLOOR-NUM[] EQS "t"] or 0[FLOOR-NUM[] EQS "s"] ]
.1.2- 192 -         roof  x = 0  y = 0
.1.2- 193 -               h = FLOOR-PERIM-D[]
.1.2- 194 -               w = 0[ 100 - FLOOR-PERIM-D[] ]
.1.2- 195 -               construction = ROOF_CONS[] ..
  .20 196 0   00endif
  .20 197 0 00$
  .1*  77 *
  .10  78 0   00set1  AREA-SP  0[15 * 0[ 50 - 15 ] ]
  .1*  79 *   0[SP-NAM0[] // "_E"] =  PERIM-SPACE[ _E, 100, 0, Z-SP[], -90
  .1*  80 *                                        , AREA-SP[], 50, .20
  .1*  81 *                                        , PERIM ]
  .2* 170 *
  .2* 171 *     space              x = 100  y = 0  z = Z-SP[]  azimuth = -90  area = AREA-SP
  .2* 171 * []
  .2* 172 *                        volume = 0[ AREA-SP[] * FLOOR-HEIGHT[] ]
  .2* 173 *                        space-conditions = PERIM  ..
  .2* 174 *         exterior-wall  x = 0  y = 0  azimuth = 0  h = FLOOR-HEIGHT[]
  .2* 175 *                        w = 50  construction = EW_CONS[]  ..
  .20 176 0   00set1 TMP1 0[ 0[.20 * 0[FLOOR-HEIGHT[] * 50]] / WINDOW_HEIGHT[]]
  .20 177 0   00if 0[ TMP1[] GT 0 ]
.1.2* 178 *           window       x = 0[ 0[50 - TMP1[]] / 2 ]
.1.2* 179 *                        y = 3.0
.1.2* 180 *                        w = TMP1[]  h = WINDOW_HEIGHT[]
.1.2* 181 *                        glass-type = GLASS_TYPE[]  ..
  .20 182 0   00endif
  .2* 183 *
  .20 184 0   00if 0[ 0[FLOOR-NUM[] EQS "g"] or 0[FLOOR-NUM[] EQS "s"] ]
```

```
.1.2* 185 *          underground-floor  area = AREA-SP[]  construction = UGF_CONS[] ..
  .20 186 0    00else
.1.2- 187 -          interior-wall    area = AREA-SP[]  construction = IW_CONS[]
.1.2- 188 -                           next-to = 0[ 0["SP_" // FLOOR-PREV[]] // _E ]  ..
  .20 189 0    00endif
  .2* 190 *
  .20 191 0    00if 0[ 0[FLOOR-NUM[] EQS "t"] or 0[FLOOR-NUM[] EQS "s"] ]
.1.2- 192 -          roof  x = 0  y = 0
.1.2- 193 -                h = FLOOR-PERIM-D[]
.1.2- 194 -                w = 0[ 50 - FLOOR-PERIM-D[] ]
.1.2- 195 -                construction = ROOF_CONS[] ..
  .20 196 0    00endif
  .20 197 0 00$
  .10  82 0        00set1  AREA-IW  0[ 1.4142 * 0[ 15 * 10 ] ]
  .10  83 0        00if  0[AREA-IW[] GT 0 ]
.1.1*  84 *                           interior-wall  area = AREA-IW[]
.1.1*  85 *                                          next-to = 0[ SP-NAM0[] // "_N" ]
.1.1*  86 *                                          construction = IW_CONS[]  ..
.1.1*  87 *                           interior-wall  area = AREA-IW[]
.1.1*  88 *                                          next-to = 0[ SP-NAM0[] // "_S" ]
.1.1*  89 *                                          construction = IW_CONS[]  ..
  .10  90 0        00endif
  .1*  91 *
  .1*  92 *    0[SP-NAM0[] // "_W"] =  PERIM-SPACE[ _W, 0, 50, Z-SP[], 90
  .1*  93 *                                        , AREA-SP[], 50, .20
  .1*  94 *                                        , PERIM ]
  .2* 170 *
  .2* 171 *      space                 x = 0  y = 50  z = Z-SP[]  azimuth = 90  area = AREA-SP[]
  .2* 172 *                            volume = 0[ AREA-SP[] * FLOOR-HEIGHT[] ]
  .2* 173 *                            space-conditions = PERIM  ..
  .2* 174 *          exterior-wall     x = 0  y = 0  azimuth = 0  h = FLOOR-HEIGHT[]
  .2* 175 *                            w = 50  construction = EW_CONS[]  ..
  .20 176 0    00set1 TMP1 0[ 0[.20 * 0[FLOOR-HEIGHT[] * 50]] / WINDOW_HEIGHT[]]
  .20 177 0    00if 0[ TMP1[] GT 0 ]
.1.2* 178 *            window          x = 0[ 0[50 - TMP1[]] / 2 ]
.1.2* 179 *                            y = 3.0
.1.2* 180 *                            w = TMP1[]  h = WINDOW_HEIGHT[]
.1.2* 181 *                            glass-type = GLASS_TYPE[]  ..
  .20 182 0    00endif
  .2* 183 *
  .20 184 0    00if 0[ 0[FLOOR-NUM[] EQS "g"] or 0[FLOOR-NUM[] EQS "s"] ]
.1.2* 185 *          underground-floor  area = AREA-SP[]  construction = UGF_CONS[] ..
  .20 186 0    00else
.1.2- 187 -          interior-wall    area = AREA-SP[]  construction = IW_CONS[]
.1.2- 188 -                           next-to = 0[ 0["SP_" // FLOOR-PREV[]] // _W ]  ..
  .20 189 0    00endif
  .2* 190 *
  .20 191 0    00if 0[ 0[FLOOR-NUM[] EQS "t"] or 0[FLOOR-NUM[] EQS "s"] ]
.1.2- 192 -          roof  x = 0  y = 0
.1.2- 193 -                h = FLOOR-PERIM-D[]
.1.2- 194 -                w = 0[ 50 - FLOOR-PERIM-D[] ]
.1.2- 195 -                construction = ROOF_CONS[] ..
  .20 196 0    00endif
  .20 197 0 00$
  .10  95 0        00if  0[AREA-IW[] GT 0 ]
.1.1*  96 *                           interior-wall  area = AREA-IW[]
.1.1*  97 *                                          next-to = 0[ SP-NAM0[] // "_N" ]
.1.1*  98 *                                          construction = IW_CONS[]  ..
.1.1*  99 *                           interior-wall  area = AREA-IW[]
.1.1* 100 *                                          next-to = 0[ SP-NAM0[] // "_S" ]
.1.1* 101 *                                          construction = IW_CONS[]  ..
  .10 102 0        00endif
  .1* 103 *
  .1* 104 *    $-------- Core space --------$
  .10 105 0    00set1  TMP1  0[ 2 * 15 ]
```

```
  .1# 106 #   ##set1  AREA-SP  #[ #[100 - TMP1[]] * #[50 - TMP1[]] ]
  .1# 107 #   ##if #[ AREA-SP[] GT 0 ]
.1.1* 108 *       #[SP-NAM0[] // "_C"] =  space  x = 15  y = 15
.1.1* 109 *                                 z = Z-SP[]  azimuth = 0  area = AREA-SP[]
.1.1* 110 *                                 volume = #[ AREA-SP[] * FLOOR-HEIGHT[] ]
.1.1* 111 *                                 space-conditions=CORE  ..
.1.1* 112 *          interior-wall  area = #[ #[100 - TMP1[]] * 10 ]
.1.1* 113 *                         next-to = #[ SP-NAM0[] // "_S" ]
.1.1* 114 *                         construction = IW_CONS[]  ..
.1.1* 115 *          interior-wall  area = #[ #[100 - TMP1[]] * 10 ]
.1.1* 116 *                         next-to = #[ SP-NAM0[] // "_N" ]
.1.1* 117 *                         construction = IW_CONS[]  ..
.1.1* 118 *          interior-wall  area = #[ #[50 - TMP1[]] * 10 ]
.1.1* 119 *                         next-to = #[ SP-NAM0[] // "_E" ]
.1.1* 120 *                         construction = IW_CONS[]  ..
.1.1* 121 *          interior-wall  area = #[ #[50 - TMP1[]] * 10 ]
.1.1* 122 *                         next-to = #[ SP-NAM0[] // "_W" ]
.1.1* 123 *                         construction = IW_CONS[]  ..
.1.1* 124 *
.1.1# 125 #          ##if #[ g EQS "g" ]
.2.1* 126 *            underground-floor  area = AREA-SP[]  construction = UGF_CONS[] ..
.1.1# 127 #          ##else
.2.1- 128 -            interior-wall      area = AREA-SP[]
.2.1- 129 -                               next-to = #[ #["SP_" // FLOOR-PREV[]] // "_C"]
.2.1- 130 -                               construction = IW_CONS[]  ..
.1.1# 131 #          ##endif
.1.1* 132 *
.1.1# 133 #          ##if #[ g EQS "t" ]
.2.1- 134 -            roof         x = 15  y = 15
.2.1- 135 -                         h = #[50 - #[ 2 * 15 ] ]
.2.1- 136 -                         w = #[100 - #[ 2 * 15 ] ]
.2.1- 137 -                         construction = ROOF_CONS[]  ..
.1.1# 138 #          ##endif
  .1# 139 #   ##endif
  .1# 140 #   ##$
  .1# 141 #   ##$ update the z-coordinate.
  .1# 142 #   ##set1  Z-SP  #[ Z-SP[] + FLOOR-HEIGHT[] ]
  .1# 143 #   ##set1  FLOOR-PREV  g
  .1# 144 #   ##$
    *  65 * $----- 1st    floor
    *  66 * FLOOR[ 1, 100,  50,  10,    15  , .30,    CORE, PERIM, PERIM, PERIM, PERIM ]
  .1#  32 #   ##$
  .1#  33 #   ##$                                    --->|      |<--- 15
  .1#  34 #   ##$
  .1#  35 #   ##$
  .1#  36 #   ##$               ----------wwwwwwwwwwwww----------
  .1#  37 #   ##$               |\                             /|      ^
  .1#  38 #   ##$               | \            _N             / |      |
  .1#  39 #   ##$               |  \                         /  |      |
  .1#  40 #   ##$               |    ------------------          |      |
  .1#  41 #   ##$               w    |                |         w      |
  .1#  42 #   ##$               w    |                |         w      |
  .1#  43 #   ##$               w _W |       _C       | _E      w     50
  .1#  44 #   ##$               w    |                |         w      |
  .1#  45 #   ##$               w    |                |         w      |
  .1#  46 #   ##$               |    ------------------          |      |
  .1#  47 #   ##$               |  /                         \  |      |
  .1#  48 #   ##$               | /            _S             \ |      |
  .1#  49 #   ##$               |/                             \|      v
  .1#  50 #   ##$               ----------wwwwwwwwwwwww----------
  .1#  51 #   ##$
  .1#  52 #   ##$
  .1#  53 #   ##$               <--------     100      ------->
  .1#  54 # ##$
.1.1#  55 #   ##ifndef  WINDOW_HEIGHT
```

```
.1.1-  56 -     ØØset1  WINDOW_HEIGHT  3.0
  .1Ø  57 Ø   ØØendif
  .1Ø  58 Ø ØØ$
.1.1Ø  59 Ø   ØØifndef  Z-SP
.1.1-  60 -     ØØset1  Z-SP  0
  .1Ø  61 Ø   ØØendif
  .1Ø  62 Ø ØØ$
  .1Ø  63 Ø   ØØset1  FLOOR-HEIGHT  10
  .1Ø  64 Ø   ØØset1  FLOOR-NUM     1
  .1Ø  65 Ø   ØØset1  FLOOR-PERIM-D 15
  .1Ø  66 Ø ØØ$
  .1Ø  67 Ø   ØØset1  SP-NAMØ  Ø["SP_" // 1]
  .1Ø  68 Ø ØØ$
  .1Ø  69 Ø   ØØset1  AREA-SP  Ø[ 15 * Ø[ 100 - 15 ] ]
  .1*  70 *   Ø[SP-NAMØ[] // "_N"] =  PERIM-SPACE[ _N, 100, 50, Z-SP[],180
  .1*  71 *                                          , AREA-SP[], 100, .30
  .1*  72 *                                          , PERIM ]
  .2* 170 *
  .2* 171 *     space              x = 100  y = 50  z = Z-SP[]  azimuth = 180  area = AREA-S
  .2* 171 * P[]
  .2* 172 *                        volume = Ø[ AREA-SP[] * FLOOR-HEIGHT[] ]
  .2* 173 *                        space-conditions = PERIM  ..
  .2* 174 *         exterior-wall  x = 0  y = 0  azimuth = 0  h = FLOOR-HEIGHT[]
  .2* 175 *                        w = 100  construction = EW_CONS[]  ..
  .2Ø 176 Ø   ØØset1 TMP1 Ø[ Ø[.30 * Ø[FLOOR-HEIGHT[] * 100]] / WINDOW_HEIGHT[]]
  .2Ø 177 Ø   ØØif Ø[ TMP1[] GT 0 ]
.1.2* 178 *           window       x = Ø[ Ø[100 - TMP1[]] / 2 ]
.1.2* 179 *                        y = 3.0
.1.2* 180 *                        w = TMP1[]  h = WINDOW_HEIGHT[]
.1.2* 181 *                        glass-type = GLASS_TYPE[]  ..
  .2Ø 182 Ø   ØØendif
  .2* 183 *
  .2Ø 184 Ø   ØØif Ø[ Ø[FLOOR-NUM[] EQS "g"] or Ø[FLOOR-NUM[] EQS "s"] ]
.1.2- 185 -         underground-floor  area = AREA-SP[]  construction = UGF_CONS[] ..
  .2Ø 186 Ø   ØØelse
.1.2* 187 *         interior-wall    area = AREA-SP[]  construction = IW_CONS[]
.1.2* 188 *                          next-to = Ø[ Ø["SP_" // FLOOR-PREV[]] // _N ]  ..
  .2Ø 189 Ø   ØØendif
  .2* 190 *
  .2Ø 191 Ø   ØØif Ø[ Ø[FLOOR-NUM[] EQS "t"] or Ø[FLOOR-NUM[] EQS "s"] ]
.1.2- 192 -         roof  x = 0  y = 0
.1.2- 193 -               h = FLOOR-PERIM-D[]
.1.2- 194 -               w = Ø[ 100 - FLOOR-PERIM-D[] ]
.1.2- 195 -               construction = ROOF_CONS[] ..
  .2Ø 196 Ø   ØØendif
  .2Ø 197 Ø ØØ$
  .1*  73 *
  .1*  74 *   Ø[SP-NAMØ[] // "_S"] =  PERIM-SPACE[ _S, 0, 0, Z-SP[],  0
  .1*  75 *                                          , AREA-SP[], 100, .30
  .1*  76 *                                          , PERIM ]
  .2* 170 *
  .2* 171 *     space              x = 0  y = 0  z = Z-SP[]  azimuth = 0  area = AREA-SP[]
  .2* 172 *                        volume = Ø[ AREA-SP[] * FLOOR-HEIGHT[] ]
  .2* 173 *                        space-conditions = PERIM  ..
  .2* 174 *         exterior-wall  x = 0  y = 0  azimuth = 0  h = FLOOR-HEIGHT[]
  .2* 175 *                        w = 100  construction = EW_CONS[]  ..
  .2Ø 176 Ø   ØØset1 TMP1 Ø[ Ø[.30 * Ø[FLOOR-HEIGHT[] * 100]] / WINDOW_HEIGHT[]]
  .2Ø 177 Ø   ØØif Ø[ TMP1[] GT 0 ]
.1.2* 178 *           window       x = Ø[ Ø[100 - TMP1[]] / 2 ]
.1.2* 179 *                        y = 3.0
.1.2* 180 *                        w = TMP1[]  h = WINDOW_HEIGHT[]
.1.2* 181 *                        glass-type = GLASS_TYPE[]  ..
  .2Ø 182 Ø   ØØendif
  .2* 183 *
  .2Ø 184 Ø   ØØif Ø[ Ø[FLOOR-NUM[] EQS "g"] or Ø[FLOOR-NUM[] EQS "s"] ]
```

```
.1.2- 185 -        underground-floor  area = AREA-SP[]  construction = UGF_CONS[] ..
  .20 186 0   ØØelse
.1.2* 187 *        interior-wall    area = AREA-SP[]  construction = IW_CONS[]
.1.2* 188 *                         next-to = Ø[ Ø["SP_" // FLOOR-PREV[]] // _S ]  ..
  .20 189 0   ØØendif
  .2* 190 *
  .20 191 0   ØØif Ø[ Ø[FLOOR-NUM[] EQS "t"] or Ø[FLOOR-NUM[] EQS "s"] ]
.1.2- 192 -        roof  x = 0  y = 0
.1.2- 193 -              h = FLOOR-PERIM-D[]
.1.2- 194 -              w = Ø[ 100 - FLOOR-PERIM-D[] ]
.1.2- 195 -              construction = ROOF_CONS[] ..
  .20 196 0   ØØendif
  .20 197 0 ØØ$
  .1*  77 *
  .10  78 0   ØØset1  AREA-SP  Ø[15 * Ø[ 50 - 15 ] ]
  .1*  79 *   Ø[SP-NAMØ[] // "_E"] =  PERIM-SPACE[ _E, 100, 0, Z-SP[], -90
  .1*  80 *                                        , AREA-SP[], 50, .30
  .1*  81 *                                        , PERIM ]
  .2* 170 *
  .2* 171 *     space              x = 100  y = 0  z = Z-SP[]  azimuth = -90  area = AREA-SP
  .2* 171 * []
  .2* 172 *                        volume = Ø[ AREA-SP[] * FLOOR-HEIGHT[] ]
  .2* 173 *                        space-conditions = PERIM  ..
  .2* 174 *        exterior-wall   x = 0  y = 0  azimuth = 0  h = FLOOR-HEIGHT[]
  .2* 175 *                        w = 50  construction = EW_CONS[]  ..
  .20 176 0   ØØset1 TMP1 Ø[ Ø[.30 * Ø[FLOOR-HEIGHT[] * 50]] / WINDOW_HEIGHT[]]
  .20 177 0   ØØif Ø[ TMP1[] GT 0 ]
.1.2* 178 *          window        x = Ø[ Ø[50 - TMP1[]] / 2 ]
.1.2* 179 *                        y = 3.0
.1.2* 180 *                        w = TMP1[]  h = WINDOW_HEIGHT[]
.1.2* 181 *                        glass-type = GLASS_TYPE[]  ..
  .20 182 0   ØØendif
  .2* 183 *
  .20 184 0   ØØif Ø[ Ø[FLOOR-NUM[] EQS "g"] or Ø[FLOOR-NUM[] EQS "s"] ]
.1.2- 185 -        underground-floor  area = AREA-SP[]  construction = UGF_CONS[] ..
  .20 186 0   ØØelse
.1.2* 187 *        interior-wall    area = AREA-SP[]  construction = IW_CONS[]
.1.2* 188 *                         next-to = Ø[ Ø["SP_" // FLOOR-PREV[]] // _E ]  ..
  .20 189 0   ØØendif
  .2* 190 *
  .20 191 0   ØØif Ø[ Ø[FLOOR-NUM[] EQS "t"] or Ø[FLOOR-NUM[] EQS "s"] ]
.1.2- 192 -        roof  x = 0  y = 0
.1.2- 193 -              h = FLOOR-PERIM-D[]
.1.2- 194 -              w = Ø[ 50 - FLOOR-PERIM-D[] ]
.1.2- 195 -              construction = ROOF_CONS[] ..
  .20 196 0   ØØendif
  .20 197 0 ØØ$
  .10  82 0       ØØset1  AREA-IW  Ø[ 1.4142 * Ø[ 15 * 10 ] ]
  .10  83 0       ØØif  Ø[AREA-IW[] GT 0 ]
.1.1*  84 *                         interior-wall  area = AREA-IW[]
.1.1*  85 *                                        next-to = Ø[ SP-NAMØ[] // "_N" ]
.1.1*  86 *                                        construction = IW_CONS[]  ..
.1.1*  87 *                         interior-wall  area = AREA-IW[]
.1.1*  88 *                                        next-to = Ø[ SP-NAMØ[] // "_S" ]
.1.1*  89 *                                        construction = IW_CONS[]  ..
  .10  90 0       ØØendif
  .1*  91 *
  .1*  92 *   Ø[SP-NAMØ[] // "_W"] =  PERIM-SPACE[ _W, 0, 50, Z-SP[], 90
  .1*  93 *                                        , AREA-SP[], 50, .30
  .1*  94 *                                        , PERIM ]
  .2* 170 *
  .2* 171 *     space              x = 0  y = 50  z = Z-SP[]  azimuth = 90  area = AREA-SP[]
  .2* 172 *                        volume = Ø[ AREA-SP[] * FLOOR-HEIGHT[] ]
  .2* 173 *                        space-conditions = PERIM  ..
  .2* 174 *        exterior-wall   x = 0  y = 0  azimuth = 0  h = FLOOR-HEIGHT[]
```

```
  .2* 175 *                        w = 50  construction = EW_CONS[]  ..
  .2@ 176 @   @@set1 TMP1 @[ @[.30 * @[FLOOR-HEIGHT[] * 50]] / WINDOW_HEIGHT[]]
  .2@ 177 @   @@if @[ TMP1[] GT 0 ]
.1.2* 178 *          window       x = @[ @[50 - TMP1[]] / 2 ]
.1.2* 179 *                       y = 3.0
.1.2* 180 *                       w = TMP1[]  h = WINDOW_HEIGHT[]
.1.2* 181 *                       glass-type = GLASS_TYPE[]  ..
  .2@ 182 @   @@endif
  .2* 183 *
  .2@ 184 @   @@if @[ @[FLOOR-NUM[] EQS "g"] or @[FLOOR-NUM[] EQS "s"] ]
.1.2- 185 -         underground-floor  area = AREA-SP[]  construction = UGF_CONS[] ..
  .2@ 186 @   @@else
.1.2* 187 *         interior-wall    area = AREA-SP[]  construction = IW_CONS[]
.1.2* 188 *                          next-to = @[ @["SP_" // FLOOR-PREV[]] // _W ]  ..
  .2@ 189 @   @@endif
  .2* 190 *
  .2@ 191 @   @@if @[ @[FLOOR-NUM[] EQS "t"] or @[FLOOR-NUM[] EQS "s"] ]
.1.2- 192 -         roof  x = 0  y = 0
.1.2- 193 -               h = FLOOR-PERIM-D[]
.1.2- 194 -               w = @[ 50 - FLOOR-PERIM-D[] ]
.1.2- 195 -               construction = ROOF_CONS[] ..
  .2@ 196 @   @@endif
  .2@ 197 @ @@$
  .1@  95 @       @@if  @[AREA-IW[] GT 0 ]
.1.1*  96 *                        interior-wall  area = AREA-IW[]
.1.1*  97 *                                       next-to = @[ SP-NAM0[] // "_N" ]
.1.1*  98 *                                       construction = IW_CONS[]  ..
.1.1*  99 *                        interior-wall  area = AREA-IW[]
.1.1* 100.*                                       next-to = @[ SP-NAM0[] // "_S" ]
.1.1* 101 *                                       construction = IW_CONS[]  ..
  .1@ 102 @       @@endif
  .1* 103 *
  .1* 104 *   $-------- Core space --------$
  .1@ 105 @   @@set1  TMP1  @[ 2 * 15 ]
  .1@ 106 @   @@set1  AREA-SP  @[ @[100 - TMP1[]] * @[50 - TMP1[]] ]
  .1@ 107 @   @@if @[ AREA-SP[] GT 0 ]
.1.1* 108 *       @[SP-NAM0[] // "_C"] =  space  x = 15  y = 15
.1.1* 109 *                                      z = Z-SP[]  azimuth = 0  area = AREA-SP[]
.1.1* 110 *                                      volume = @[ AREA-SP[] * FLOOR-HEIGHT[] ]
.1.1* 111 *                                      space-conditions=CORE  ..
.1.1* 112 *          interior-wall  area = @[ @[100 - TMP1[]] * 10 ]
.1.1* 113 *                         next-to = @[ SP-NAM0[] // "_S" ]
.1.1* 114 *                         construction = IW_CONS[]  ..
.1.1* 115 *          interior-wall  area = @[ @[100 - TMP1[]] * 10 ]
.1.1* 116 *                         next-to = @[ SP-NAM0[] // "_N" ]
.1.1* 117 *                         construction = IW_CONS[]  ..
.1.1* 118 *          interior-wall  area = @[ @[50 - TMP1[]] * 10 ]
.1.1* 119 *                         next-to = @[ SP-NAM0[] // "_E" ]
.1.1* 120 *                         construction = IW_CONS[]  ..
.1.1* 121 *          interior-wall  area = @[ @[50 - TMP1[]] * 10 ]
.1.1* 122 *                         next-to = @[ SP-NAM0[] // "_W" ]
.1.1* 123 *                         construction = IW_CONS[]  ..
.1.1* 124 *
.1.1@ 125 @          @@if @[ 1 EQS "g" ]
.2.1- 126 -            underground-floor  area = AREA-SP[]  construction = UGF_CONS[] ..
.1.1@ 127 @          @@else
.2.1* 128 *            interior-wall      area = AREA-SP[]
.2.1* 129 *                               next-to = @[ @["SP_" // FLOOR-PREV[]] // "_C"]
.2.1* 130 *                               construction = IW_CONS[]  ..
.1.1@ 131 @          @@endif
.1.1* 132 *
.1.1@ 133 @          @@if @[ 1 EQS "t" ]
.2.1- 134 -            roof          x = 15  y = 15
.2.1- 135 -                          h = @[50 - @[ 2 * 15 ] ]
.2.1- 136 -                          w = @[100 - @[ 2 * 15 ] ]
```

```
.2.1- 137 -                        construction = ROOF_CONS[]  ..
.1.1# 138 #            ##endif
  .1# 139 #    ##endif
  .1# 140 #    ##$
  .1# 141 #    ##$ update the z-coordinate.
  .1# 142 #    ##set1  Z-SP  #[ Z-SP[] + FLOOR-HEIGHT[] ]
  .1# 143 #    ##set1  FLOOR-PREV  1
  .1# 144 #    ##$
    *  67 * $----- top floor
    *  68 * FLOOR[ t, 100,  50,  10,    15  , .30,    CORE, PERIM, PERIM, PERIM, PERIM ]
  .1#  32 #    ##$
  .1#  33 #    ##$                                      --->|      |<--- 15
  .1#  34 #    ##$
  .1#  35 #    ##$
  .1#  36 #    ##$                ----------wwwwwwwwwwwww----------
  .1#  37 #    ##$                |\                            /|        ^
  .1#  38 #    ##$                | \            _N            / |        |
  .1#  39 #    ##$                |  \                        /  |        |
  .1#  40 #    ##$                |   ------------------------   |        |
  .1#  41 #    ##$                w   |                      |   w        |
  .1#  42 #    ##$                w   |                      |   w        |
  .1#  43 #    ##$                w _W |        _C            | _E w     50
  .1#  44 #    ##$                w   |                      |   w        |
  .1#  45 #    ##$                w   |                      |   w        |
  .1#  46 #    ##$                |   ------------------------   |        |
  .1#  47 #    ##$                |  /                        \  |        |
  .1#  48 #    ##$                | /            _S            \ |        |
  .1#  49 #    ##$                |/                            \|        v
  .1#  50 #    ##$                ----------wwwwwwwwwwwww----------
  .1#  51 #    ##$
  .1#  52 #    ##$
  .1#  53 #    ##$                 <--------       100      ------->
  .1#  54 # ##$
.1.1#  55 #    ##ifndef  WINDOW_HEIGHT
.1.1-  56 -      ##set1  WINDOW_HEIGHT  3.0
  .1#  57 #    ##endif
  .1#  58 # ##$
.1.1#  59 #    ##ifndef  Z-SP
.1.1-  60 -      ##set1  Z-SP  0
  .1#  61 #    ##endif
  .1#  62 # ##$
  .1#  63 #    ##set1  FLOOR-HEIGHT  10
  .1#  64 #    ##set1  FLOOR-NUM     t
  .1#  65 #    ##set1  FLOOR-PERIM-D 15
  .1#  66 # ##$
  .1#  67 #    ##set1  SP-NAM0  #["SP_" // t]
  .1#  68 # ##$
  .1#  69 #    ##set1  AREA-SP  #[ 15 * #[ 100 - 15 ] ]
  .1*  70 *    #[SP-NAM0[] // "_N"] =  PERIM-SPACE[ _N, 100, 50, Z-SP[],180
  .1*  71 *                                          , AREA-SP[], 100, .30
  .1*  72 *                                          , PERIM ]
  .2* 170 *
  .2* 171 *     space              x = 100  y = 50  z = Z-SP[]  azimuth = 180  area = AREA-S
  .2* 171 * P[]
  .2* 172 *                        volume = #[ AREA-SP[] * FLOOR-HEIGHT[] ]
  .2* 173 *                        space-conditions = PERIM  ..
  .2* 174 *         exterior-wall  x = 0  y = 0  azimuth = 0  h = FLOOR-HEIGHT[]
  .2* 175 *                        w = 100  construction = EW_CONS[]  ..
  .2# 176 #    ##set1 TMP1 #[ #[.30 * #[FLOOR-HEIGHT[] * 100]] / WINDOW_HEIGHT[]]
  .2# 177 #    ##if #[ TMP1[] GT 0 ]
.1.2* 178 *           window       x = #[ #[100 - TMP1[]] / 2 ]
.1.2* 179 *                        y = 3.0
.1.2* 180 *                        w = TMP1[]  h = WINDOW_HEIGHT[]
.1.2* 181 *                        glass-type = GLASS_TYPE[]  ..
  .2# 182 #    ##endif
```

```
  .2* 183 *
  .2@ 184 @   @@if @[ @[FLOOR-NUM[] EQS "g"] or @[FLOOR-NUM[] EQS "s"] ]
.1.2- 185 -         underground-floor  area = AREA-SP[]  construction = UGF_CONS[] ..
  .2@ 186 @   @@else
.1.2* 187 *         interior-wall    area = AREA-SP[]  construction = IW_CONS[]
.1.2* 188 *                          next-to = @[ @["SP_" // FLOOR-PREV[]] // _N ]  ..
  .2@ 189 @   @@endif
  .2* 190 *
  .2@ 191 @   @@if @[ @[FLOOR-NUM[] EQS "t"] or @[FLOOR-NUM[] EQS "s"] ]
.1.2* 192 *         roof  x = 0  y = 0
.1.2* 193 *               h = FLOOR-PERIM-D[]
.1.2* 194 *               w = @[ 100 - FLOOR-PERIM-D[] ]
.1.2* 195 *               construction = ROOF_CONS[] ..
  .2@ 196 @   @@endif
  .2@ 197 @ @@$
  .1*  73 *
  .1*  74 *   @[SP-NAM0[] // "_S"] =  PERIM-SPACE[ _S, 0, 0, Z-SP[],  0
  .1*  75 *                                        , AREA-SP[], 100, .30
  .1*  76 *                                        , PERIM ]
  .2* 170 *
  .2* 171 *     space              x = 0  y = 0  z = Z-SP[]  azimuth = 0  area = AREA-SP[]
  .2* 172 *                        volume = @[ AREA-SP[] * FLOOR-HEIGHT[] ]
  .2* 173 *                        space-conditions = PERIM  ..
  .2* 174 *         exterior-wall  x = 0  y = 0  azimuth = 0  h = FLOOR-HEIGHT[]
  .2* 175 *                        w = 100  construction = EW_CONS[]  ..
  .2@ 176 @   @@set1 TMP1 @[ @[.30 * @[FLOOR-HEIGHT[] * 100]] / WINDOW_HEIGHT[]]
  .2@ 177 @   @@if @[ TMP1[] GT 0 ]
.1.2* 178 *           window       x = @[ @[100 - TMP1[]] / 2 ]
.1.2* 179 *                        y = 3.0
.1.2* 180 *                        w = TMP1[]  h = WINDOW_HEIGHT[]
.1.2* 181 *                        glass-type = GLASS_TYPE[]  ..
  .2@ 182 @   @@endif
  .2* 183 *
  .2@ 184 @   @@if @[ @[FLOOR-NUM[] EQS "g"] or @[FLOOR-NUM[] EQS "s"] ]
.1.2- 185 -         underground-floor  area = AREA-SP[]  construction = UGF_CONS[] ..
  .2@ 186 @   @@else
.1.2* 187 *         interior-wall    area = AREA-SP[]  construction = IW_CONS[]
.1.2* 188 *                          next-to = @[ @["SP_" // FLOOR-PREV[]] // _S ]  ..
  .2@ 189 @   @@endif
  .2* 190 *
  .2@ 191 @   @@if @[ @[FLOOR-NUM[] EQS "t"] or @[FLOOR-NUM[] EQS "s"] ]
.1.2* 192 *         roof  x = 0  y = 0
.1.2* 193 *               h = FLOOR-PERIM-D[]
.1.2* 194 *               w = @[ 100 - FLOOR-PERIM-D[] ]
.1.2* 195 *               construction = ROOF_CONS[] ..
  .2@ 196 @   @@endif
  .2@ 197 @ @@$
  .1*  77 *
  .1@  78 @   @@set1  AREA-SP  @[15 * @[ 50 - 15 ] ]
  .1*  79 *   @[SP-NAM0[] // "_E"] =  PERIM-SPACE[ _E, 100, 0, Z-SP[], -90
  .1*  80 *                                        , AREA-SP[], 50, .30
  .1*  81 *                                        , PERIM ]
  .2* 170 *
  .2* 171 *     space              x = 100  y = 0  z = Z-SP[]  azimuth = -90  area = AREA-SP
  .2* 171 * []
  .2* 172 *                        volume = @[ AREA-SP[] * FLOOR-HEIGHT[] ]
  .2* 173 *                        space-conditions = PERIM  ..
  .2* 174 *         exterior-wall  x = 0  y = 0  azimuth = 0  h = FLOOR-HEIGHT[]
  .2* 175 *                        w = 50  construction = EW_CONS[]  ..
  .2@ 176 @   @@set1 TMP1 @[ @[.30 * @[FLOOR-HEIGHT[] * 50]] / WINDOW_HEIGHT[]]
  .2@ 177 @   @@if @[ TMP1[] GT 0 ]
.1.2* 178 *           window       x = @[ @[50 - TMP1[]] / 2 ]
.1.2* 179 *                        y = 3.0
.1.2* 180 *                        w = TMP1[]  h = WINDOW_HEIGHT[]
.1.2* 181 *                        glass-type = GLASS_TYPE[]  ..
```

```
  .2Ø 182 Ø   ØØendif
  .2* 183 *
  .2Ø 184 Ø   ØØif Ø[ Ø[FLOOR-NUM[] EQS "g"] or Ø[FLOOR-NUM[] EQS "s"] ]
 .1.2- 185 -        underground-floor  area = AREA-SP[]  construction = UGF_CONS[] ..
  .2Ø 186 Ø   ØØelse
 .1.2* 187 *        interior-wall    area = AREA-SP[]  construction = IW_CONS[]
 .1.2* 188 *                         next-to = Ø[ Ø["SP_" // FLOOR-PREV[]] // _E ]  ..
  .2Ø 189 Ø   ØØendif
  .2* 190 *
  .2Ø 191 Ø   ØØif Ø[ Ø[FLOOR-NUM[] EQS "t"] or Ø[FLOOR-NUM[] EQS "s"] ]
 .1.2* 192 *        roof  x = 0  y = 0
 .1.2* 193 *              h = FLOOR-PERIM-D[]
 .1.2* 194 *              w = Ø[ 50 - FLOOR-PERIM-D[] ]
 .1.2* 195 *              construction = ROOF_CONS[] ..
  .2Ø 196 Ø   ØØendif
  .2Ø 197 Ø ØØ$
  .1Ø  82 Ø       ØØset1  AREA-IW  Ø[ 1.4142 * Ø[ 15 * 10 ] ]
  .1Ø  83 Ø       ØØif  Ø[AREA-IW[] GT 0 ]
 .1.1*  84 *                        interior-wall  area = AREA-IW[]
 .1.1*  85 *                                       next-to = Ø[ SP-NAMØ[] // "_N" ]
 .1.1*  86 *                                       construction = IW_CONS[]  ..
 .1.1*  87 *                        interior-wall  area = AREA-IW[]
 .1.1*  88 *                                       next-to = Ø[ SP-NAMØ[] // "_S" ]
 .1.1*  89 *                                       construction = IW_CONS[]  ..
  .1Ø  90 Ø       ØØendif
  .1*  91 *
  .1*  92 *   Ø[SP-NAMØ[] // "_W"] =  PERIM-SPACE[ _W, 0, 50, Z-SP[], 90
  .1*  93 *                                      , AREA-SP[], 50, .30
  .1*  94 *                                      , PERIM ]
  .2* 170 *
  .2* 171 *     space              x = 0  y = 50  z = Z-SP[]  azimuth = 90  area = AREA-SP[]
  .2* 172 *                        volume = Ø[ AREA-SP[] * FLOOR-HEIGHT[] ]
  .2* 173 *                        space-conditions = PERIM  ..
  .2* 174 *         exterior-wall  x = 0  y = 0  azimuth = 0  h = FLOOR-HEIGHT[]
  .2* 175 *                        w = 50  construction = EW_CONS[]  ..
  .2Ø 176 Ø   ØØset1 TMP1 Ø[ Ø[.30 * Ø[FLOOR-HEIGHT[] * 50]] / WINDOW_HEIGHT[]]
  .2Ø 177 Ø   ØØif Ø[ TMP1[] GT 0 ]
 .1.2* 178 *          window       x = Ø[ Ø[50 - TMP1[]] / 2 ]
 .1.2* 179 *                       y = 3.0
 .1.2* 180 *                       w = TMP1[]  h = WINDOW_HEIGHT[]
 .1.2* 181 *                       glass-type = GLASS_TYPE[]  ..
  .2Ø 182 Ø   ØØendif
  .2* 183 *
  .2Ø 184 Ø   ØØif Ø[ Ø[FLOOR-NUM[] EQS "g"] or Ø[FLOOR-NUM[] EQS "s"] ]
 .1.2- 185 -        underground-floor  area = AREA-SP[]  construction = UGF_CONS[] ..
  .2Ø 186 Ø   ØØelse
 .1.2* 187 *        interior-wall    area = AREA-SP[]  construction = IW_CONS[]
 .1.2* 188 *                         next-to = Ø[ Ø["SP_" // FLOOR-PREV[]] // _W ]  ..
  .2Ø 189 Ø   ØØendif
  .2* 190 *
  .2Ø 191 Ø   ØØif Ø[ Ø[FLOOR-NUM[] EQS "t"] or Ø[FLOOR-NUM[] EQS "s"] ]
 .1.2* 192 *        roof  x = 0  y = 0
 .1.2* 193 *              h = FLOOR-PERIM-D[]
 .1.2* 194 *              w = Ø[ 50 - FLOOR-PERIM-D[] ]
 .1.2* 195 *              construction = ROOF_CONS[] ..
  .2Ø 196 Ø   ØØendif
  .2Ø 197 Ø ØØ$
  .1Ø  95 Ø       ØØif  Ø[AREA-IW[] GT 0 ]
 .1.1*  96 *                        interior-wall  area = AREA-IW[]
 .1.1*  97 *                                       next-to = Ø[ SP-NAMØ[] // "_N" ]
 .1.1*  98 *                                       construction = IW_CONS[]  ..
 .1.1*  99 *                        interior-wall  area = AREA-IW[]
 .1.1* 100 *                                       next-to = Ø[ SP-NAMØ[] // "_S" ]
 .1.1* 101 *                                       construction = IW_CONS[]  ..
  .1Ø 102 Ø       ØØendif
```

```
 .1* 103 *
 .1* 104 *   $-------- Core space --------$
 .1@ 105 @   @@set1  TMP1  @[ 2 * 15 ]
 .1@ 106 @   @@set1  AREA-SP  @[ @[100 - TMP1[]] * @[50 - TMP1[]] ]
 .1@ 107 @   @@if @[ AREA-SP[] GT 0 ]
.1.1* 108 *      @[SP-NAM0[] // °_C°] =  space  x = 15  y = 15
.1.1* 109 *                                     z = Z-SP[]  azimuth = 0  area = AREA-SP[]
.1.1* 110 *                                     volume = @[ AREA-SP[] * FLOOR-HEIGHT[] ]
.1.1* 111 *                                     space-conditions=CORE  ..
.1.1* 112 *          interior-wall  area = @[ @[100 - TMP1[]] * 10 ]
.1.1* 113 *                         next-to = @[ SP-NAM0[] // °_S° ]
.1.1* 114 *                         construction = IW_CONS[]  ..
.1.1* 115 *          interior-wall  area = @[ @[100 - TMP1[]] * 10 ]
.1.1* 116 *                         next-to = @[ SP-NAM0[] // °_N° ]
.1.1* 117 *                         construction = IW_CONS[]  ..
.1.1* 118 *          interior-wall  area = @[ @[50 - TMP1[]] * 10 ]
.1.1* 119 *                         next-to = @[ SP-NAM0[] // °_E° ]
.1.1* 120 *                         construction = IW_CONS[]  ..
.1.1* 121 *          interior-wall  area = @[ @[50 - TMP1[]] * 10 ]
.1.1* 122 *                         next-to = @[ SP-NAM0[] // °_W° ]
.1.1* 123 *                         construction = IW_CONS[]  ..
.1.1* 124 *
.1.1@ 125 @          @@if @[ t EQS °g° ]
.2.1- 126 -            underground-floor  area = AREA-SP[]  construction = UGF_CONS[] ..
.1.1@ 127 @          @@else
.2.1* 128 *            interior-wall      area = AREA-SP[]
.2.1* 129 *                               next-to = @[ @[°SP_° // FLOOR-PREV[]] // °_C°]
.2.1* 130 *                               construction = IW_CONS[]  ..
.1.1@ 131 @          @@endif
.1.1* 132 *
.1.1@ 133 @          @@if @[ t EQS °t° ]
.2.1* 134 *            roof          x = 15  y = 15
.2.1* 135 *                          h = @[50 - @[ 2 * 15 ] ]
.2.1* 136 *                          w = @[100 - @[ 2 * 15 ] ]
.2.1* 137 *                          construction = ROOF_CONS[]  ..
.1.1@ 138 @          @@endif
 .1@ 139 @   @@endif
 .1@ 140 @   @@$
 .1@ 141 @   @@$ update the z-coordinate.
 .1@ 142 @   @@set1  Z-SP  @[ Z-SP[] + FLOOR-HEIGHT[] ]
 .1@ 143 @   @@set1  FLOOR-PREV  t
 .1@ 144 @   @@$
   *  69 *
   *  70 * end ..
   *  71 * compute LOADS ..
   *  72 * stop ..
```

Parameterized Building

Input after macro processing

```
          INPUT FOR PARAMETRIZED BUILDING AFTER MACRO PROCESSING
          ======================================================

<   5 >
<   6 > input  LOADS ..
<   8 >
<   9 >     run-period  JAN 1 1981  THRU  DEC 31 1981  ..
<  10 >     loads-report verification=(LV-B,LV-D,LV-F) ..
<  11 >
<  12 >
<  11 >   building-location
<  21 >                 lat = 41.88  lon = 87.63   alt = 600   t-z = 6
<  33 >
<  35 >       hol = YES  daylight-savings = YES
<  13 >
<  14 > WA-1-2 =  layers   material = (WD01,PW03,IN02,GP01)  ..
<  15 > RB-1-1 =  layers   material = (RG01,BR01,IN22,WD01)  i-f-r = .76  ..
<  16 > WALL-typ1 =  construction       layers = WA-1-2  ..
<  17 > ROOF-typ1 =  construction       layers = RB-1-1  ..
<  18 > IWF-typ1  =  construction       u = 0.5   ..
<  19 > FLOOR-typ1=  construction       u = 0.05  ..
<  20 > GT-typ1   =  glass-type         p=1  s-c=.60 ..
<  21 >
<  22 > $-----SPACE CONDITIONS-----$
<  23 >
<  24 > OCC-SCH=        schedule  THRU DEC 31 (WD) (1,7)(0) (8,17)(1) (18,24)(0)
<  25 >                                       (WEH)(1,24)(0) ..
<  26 > CORE-LITE-SCH=  schedule  THRU DEC 31 (WD) (1,6)(0) (7,18)(1) (19,24)(0)
<  27 >                                       (WEH)(1,24)(0) ..
<  28 > INF-SCH=        schedule  THRU DEC 31 (WD) (1,7)(0) (8,17)(1) (18,24)(0)
<  29 >                                       (WEH)(1,24)(0) ..
<  30 > PERIM-LITE-SCH= schedule  THRU DEC 31 (WD) (1,6)(0) (7,18)(.8) (19,24)(0)
<  31 >                                       (WEH)(1,24)(0) ..
<  32 >
<  33 > CORE=   space-conditions  t = (75)
<  34 >                           people-schedule = OCC-SCH  people-heat-gain = 450
<  35 >                               area/person = 100
<  36 >                           lighting-schedule = CORE-LITE-SCH
<  37 >                               lighting-w/sqft = 2
<  38 >                               light-to-space = .75  light-to-return = .25
<  39 >                           inf-method = AIR-CHANGE   inf-schedule = INF-SCH
<  40 >                               air-changes/hr = 0.8
<  41 >                           z-type = CONDITIONED     ..
<  42 > PERIM=  space-conditions  like CORE
<  43 >                           area/person = 90
<  44 >                           lighting-schedule = PERIM-LITE-SCH
<  45 >                           air-changes/hr = 0.6  ..
<  46 >
<  47 > $------ set some macros for glass type and constructions.
<  48 >
<  54 >
< 147 >
<  56 >
<  62 > $
<  63 > $----- ground floor
<  70 >   "SP_g_N" =
< 170 >
< 171 >     space                x = 100  y = 50  z = 0  azimuth = 180  area = 1275
< 172 >                          volume =  12750
< 173 >                          space-conditions = PERIM  ..
< 174 >         exterior-wall    x = 0  y = 0  azimuth = 0  h = 10
< 175 >                          w = 100  construction = WALL-typ1  ..
< 178 >           window         x =  16.666666031
< 179 >                          y = 3.0
< 180 >                          w = 66.666664124  h = 3.0
```

```
< 181 >                    glass-type = GT-typ1  ..
< 183 >
< 185 >        underground-floor  area = 1275  construction = FLOOR-typ1 ..
< 190 >
<  73 >
<  74 >  "SP_g_S" =
< 170 >
< 171 >   space              x = 0  y = 0  z = 0  azimuth = 0  area = 1275
< 172 >                      volume =  12750
< 173 >                      space-conditions = PERIM  ..
< 174 >        exterior-wall  x = 0  y = 0  azimuth = 0  h = 10
< 175 >                      w = 100  construction = WALL-typ1  ..
< 178 >          window      x =  16.666666031
< 179 >                      y = 3.0
< 180 >                      w = 66.666664124  h = 3.0
< 181 >                      glass-type = GT-typ1  ..
< 183 >
< 185 >        underground-floor  area = 1275  construction = FLOOR-typ1 ..
< 190 >
<  77 >
<  79 >  "SP_g_E" =
< 170 >
< 171 >   space              x = 100  y = 0  z = 0  azimuth = -90  area = 525
< 172 >                      volume =  5250
< 173 >                      space-conditions = PERIM  ..
< 174 >        exterior-wall  x = 0  y = 0  azimuth = 0  h = 10
< 175 >                      w = 50  construction = WALL-typ1  ..
< 178 >          window      x =  8.333333969
< 179 >                      y = 3.0
< 180 >                      w = 33.333332062  h = 3.0
< 181 >                      glass-type = GT-typ1  ..
< 183 >
< 185 >        underground-floor  area = 525  construction = FLOOR-typ1 ..
< 190 >
<  84 >                        interior-wall  area = 212.129989624
<  85 >                                       next-to = "SP_g_N"
<  86 >                                       construction = IWF-typ1  ..
<  87 >                        interior-wall  area = 212.129989624
<  88 >                                       next-to = "SP_g_S"
<  89 >                                       construction = IWF-typ1  ..
<  91 >
<  92 >  "SP_g_W" =
< 170 >
< 171 >   space              x = 0  y = 50  z = 0  azimuth = 90  area = 525
< 172 >                      volume =  5250
< 173 >                      space-conditions = PERIM  ..
< 174 >        exterior-wall  x = 0  y = 0  azimuth = 0  h = 10
< 175 >                      w = 50  construction = WALL-typ1  ..
< 178 >          window      x =  8.333333969
< 179 >                      y = 3.0
< 180 >                      w = 33.333332062  h = 3.0
< 181 >                      glass-type = GT-typ1  ..
< 183 >
< 185 >        underground-floor  area = 525  construction = FLOOR-typ1 ..
< 190 >
<  96 >                        interior-wall  area = 212.129989624
<  97 >                                       next-to = "SP_g_N"
<  98 >                                       construction = IWF-typ1  ..
<  99 >                        interior-wall  area = 212.129989624
< 100 >                                       next-to = "SP_g_S"
< 101 >                                       construction = IWF-typ1  ..
< 103 >
< 104 >  $-------- Core space --------$
< 108 >      "SP_g_C" =  space  x = 15  y = 15
< 109 >                                 z = 0  azimuth = 0  area = 1400
```

```
< 110 >                                    volume =  14000
< 111 >                                    space-conditions=CORE  ..
< 112 >          interior-wall  area =  700
< 113 >                         next-to = "SP_g_S"
< 114 >                         construction = IWF-typ1  ..
< 115 >          interior-wall  area =  700
< 116 >                         next-to = "SP_g_N"
< 117 >                         construction = IWF-typ1  ..
< 118 >          interior-wall  area =  200
< 119 >                         next-to = "SP_g_E"
< 120 >                         construction = IWF-typ1  ..
< 121 >          interior-wall  area =  200
< 122 >                         next-to = "SP_g_W"
< 123 >                         construction = IWF-typ1  ..
< 124 >
< 126 >            underground-floor  area = 1400  construction = FLOOR-typ1 ..
< 132 >
<  65 > $----- 1st    floor
<  70 >   "SP_1_N" =
< 170 >
< 171 >    space               x = 100  y = 50  z = 10  azimuth = 180  area = 1275
< 172 >                        volume =  12750
< 173 >                        space-conditions = PERIM  ..
< 174 >        exterior-wall   x = 0  y = 0  azimuth = 0  h = 10
< 175 >                        w = 100  construction = WALL-typ1  ..
< 178 >          window        x =  0
< 179 >                        y = 3.0
< 180 >                        w = 100  h = 3.0
< 181 >                        glass-type = GT-typ1  ..
< 183 >
< 187 >        interior-wall    area = 1275  construction = IWF-typ1
< 188 >                         next-to =  "SP_g_N"  ..
< 190 >
<  73 >
<  74 >   "SP_1_S" =
< 170 >
< 171 >    space               x = 0  y = 0  z = 10  azimuth = 0  area = 1275
< 172 >                        volume =  12750
< 173 >                        space-conditions = PERIM  ..
< 174 >        exterior-wall   x = 0  y = 0  azimuth = 0  h = 10
< 175 >                        w = 100  construction = WALL-typ1  ..
< 178 >          window        x =  0
< 179 >                        y = 3.0
< 180 >                        w = 100  h = 3.0
< 181 >                        glass-type = GT-typ1  ..
< 183 >
< 187 >        interior-wall    area = 1275  construction = IWF-typ1
< 188 >                         next-to =  "SP_g_S"  ..
< 190 >
<  77 >
<  79 >   "SP_1_E" =
< 170 >
< 171 >    space               x = 100  y = 0  z = 10  azimuth = -90  area = 525
< 172 >                        volume =  5250
< 173 >                        space-conditions = PERIM  ..
< 174 >        exterior-wall   x = 0  y = 0  azimuth = 0  h = 10
< 175 >                        w = 50  construction = WALL-typ1  ..
< 178 >          window        x =  0
< 179 >                        y = 3.0
< 180 >                        w = 50  h = 3.0
< 181 >                        glass-type = GT-typ1  ..
< 183 >
< 187 >        interior-wall    area = 525  construction = IWF-typ1
< 188 >                         next-to =  "SP_g_E"  ..
< 190 >
```

```
<  84 >                        interior-wall  area = 212.129989624
<  85 >                                       next-to = "SP_1_N"
<  86 >                                       construction = IWF-typ1  ..
<  87 >                        interior-wall  area = 212.129989624
<  88 >                                       next-to = "SP_1_S"
<  89 >                                       construction = IWF-typ1  ..
<  91 >
<  92 >  "SP_1_W" =
< 170 >
< 171 >    space              x = 0  y = 50  z = 10  azimuth = 90  area = 525
< 172 >                       volume =  5250
< 173 >                       space-conditions = PERIM  ..
< 174 >       exterior-wall   x = 0  y = 0  azimuth = 0  h = 10
< 175 >                       w = 50  construction = WALL-typ1  ..
< 178 >         window        x =  0
< 179 >                       y = 3.0
< 180 >                       w = 50  h = 3.0
< 181 >                       glass-type = GT-typ1  ..
< 183 >
< 187 >       interior-wall    area = 525  construction = IWF-typ1
< 188 >                        next-to =  "SP_g_W"  ..
< 190 >
<  96 >                        interior-wall  area = 212.129989624
<  97 >                                       next-to = "SP_1_N"
<  98 >                                       construction = IWF-typ1  ..
<  99 >                        interior-wall  area = 212.129989624
< 100 >                                       next-to = "SP_1_S"
< 101 >                                       construction = IWF-typ1  ..
< 103 >
< 104 >  $-------- Core space --------$
< 108 >     "SP_1_C" =  space  x = 15  y = 15
< 109 >                                z = 10  azimuth = 0  area = 1400
< 110 >                                volume =  14000
< 111 >                                space-conditions=CORE  ..
< 112 >         interior-wall  area =  700
< 113 >                        next-to = "SP_1_S"
< 114 >                        construction = IWF-typ1  ..
< 115 >         interior-wall  area =  700
< 116 >                        next-to = "SP_1_N"
< 117 >                        construction = IWF-typ1  ..
< 118 >         interior-wall  area =  200
< 119 >                        next-to = "SP_1_E"
< 120 >                        construction = IWF-typ1  ..
< 121 >         interior-wall  area =  200
< 122 >                        next-to = "SP_1_W"
< 123 >                        construction = IWF-typ1  ..
< 124 >
< 128 >          interior-wall      area = 1400
< 129 >                             next-to =  "SP_g_C"
< 130 >                             construction = IWF-typ1  ..
< 132 >
<  67 > $----- top floor
<  70 >  "SP_t_N" =
< 170 >
< 171 >    space              x = 100  y = 50  z = 20  azimuth = 180  area = 1275
< 172 >                       volume =  12750
< 173 >                       space-conditions = PERIM  ..
< 174 >       exterior-wall   x = 0  y = 0  azimuth = 0  h = 10
< 175 >                       w = 100  construction = WALL-typ1  ..
< 178 >         window        x =  0
< 179 >                       y = 3.0
< 180 >                       w = 100  h = 3.0
< 181 >                       glass-type = GT-typ1  ..
< 183 >
< 187 >       interior-wall    area = 1275  construction = IWF-typ1
```

```
< 188 >                        next-to =  "SP_1_N"  ..
< 190 >
< 192 >        roof  x = 0  y = 0
< 193 >              h = 15
< 194 >              w =  85
< 195 >              construction = ROOF-typ1 ..
<  73 >
<  74 >  "SP_t_S" =
< 170 >
< 171 >    space              x = 0  y = 0  z = 20  azimuth = 0  area = 1275
< 172 >                       volume =  12750
< 173 >                       space-conditions = PERIM  ..
< 174 >        exterior-wall  x = 0  y = 0  azimuth = 0  h = 10
< 175 >                       w = 100  construction = WALL-typ1  ..
< 178 >          window       x =  0
< 179 >                       y = 3.0
< 180 >                       w = 100  h = 3.0
< 181 >                       glass-type = GT-typ1  ..
< 183 >
< 187 >        interior-wall    area = 1275  construction = IWF-typ1
< 188 >                         next-to =  "SP_1_S"  ..
< 190 >
< 192 >        roof  x = 0  y = 0
< 193 >              h = 15
< 194 >              w =  85
< 195 >              construction = ROOF-typ1 ..
<  77 >
<  79 >  "SP_t_E" =
< 170 >
< 171 >    space              x = 100  y = 0  z = 20  azimuth = -90  area = 525
< 172 >                       volume =  5250
< 173 >                       space-conditions = PERIM  ..
< 174 >        exterior-wall  x = 0  y = 0  azimuth = 0  h = 10
< 175 >                       w = 50  construction = WALL-typ1  ..
< 178 >          window       x =  0
< 179 >                       y = 3.0
< 180 >                       w = 50  h = 3.0
< 181 >                       glass-type = GT-typ1  ..
< 183 >
< 187 >        interior-wall    area = 525  construction = IWF-typ1
< 188 >                         next-to =  "SP_1_E"  ..
< 190 >
< 192 >        roof  x = 0  y = 0
< 193 >              h = 15
< 194 >              w =  35
< 195 >              construction = ROOF-typ1 ..
<  84 >                       interior-wall  area = 212.129989624
<  85 >                                      next-to = "SP_t_N"
<  86 >                                      construction = IWF-typ1  ..
<  87 >                       interior-wall  area = 212.129989624
<  88 >                                      next-to = "SP_t_S"
<  89 >                                      construction = IWF-typ1  ..
<  91 >
<  92 >  "SP_t_W" =
< 170 >
< 171 >    space              x = 0  y = 50  z = 20  azimuth = 90  area = 525
< 172 >                       volume =  5250
< 173 >                       space-conditions = PERIM  ..
< 174 >        exterior-wall  x = 0  y = 0  azimuth = 0  h = 10
< 175 >                       w = 50  construction = WALL-typ1  ..
< 178 >          window       x =  0
< 179 >                       y = 3.0
< 180 >                       w = 50  h = 3.0
< 181 >                       glass-type = GT-typ1  ..
< 183 >
```

```
< 187 >        interior-wall    area = 525  construction = IWF-typ1
< 188 >                         next-to =  °SP_1_W°  ..
< 190 >
< 192 >        roof  x = 0  y = 0
< 193 >              h = 15
< 194 >              w =  35
< 195 >              construction = ROOF-typ1 ..
<  96 >                       interior-wall  area = 212.129989624
<  97 >                                      next-to = °SP_t_N°
<  98 >                                      construction = IWF-typ1  ..
<  99 >                       interior-wall  area = 212.129989624
< 100 >                                      next-to = °SP_t_S°
< 101 >                                      construction = IWF-typ1  ..
< 103 >
< 104 >   $-------- Core space --------$
< 108 >       °SP_t_C° =  space  x = 15  y = 15
< 109 >                                  z = 20  azimuth = 0  area = 1400
< 110 >                                  volume =  14000
< 111 >                                  space-conditions=CORE  ..
< 112 >          interior-wall  area =  700
< 113 >                         next-to = °SP_t_S°
< 114 >                         construction = IWF-typ1  ..
< 115 >          interior-wall  area =  700
< 116 >                         next-to = °SP_t_N°
< 117 >                         construction = IWF-typ1  ..
< 118 >          interior-wall  area =  200
< 119 >                         next-to = °SP_t_E°
< 120 >                         construction = IWF-typ1  ..
< 121 >          interior-wall  area =  200
< 122 >                         next-to = °SP_t_W°
< 123 >                         construction = IWF-typ1  ..
< 124 >
< 128 >            interior-wall      area = 1400
< 129 >                               next-to =  °SP_1_C°
< 130 >                               construction = IWF-typ1  ..
< 132 >
< 134 >            roof         x = 15  y = 15
< 135 >                         h =  20
< 136 >                         w =  70
< 137 >                         construction = ROOF-typ1  ..
<  69 >
<  70 > end ..
<  71 > compute LOADS ..
```

REPORT- LV-B SUMMARY OF SPACES OCCURRING IN THE PROJECT WEATHER FILE- TRY CHICAGO

NUMBER OF SPACES 15 EXTERIOR 13 INTERIOR 2

SPACE	SPACE*FLOOR MULTIPLIER	SPACE TYPE	AZIMUTH	LIGHTING (WATT / SQFT)	PEOPLE	EQUIP (WATT / SQFT)	INFILTRATION METHOD	AIR CHANGES PER HOUR	AREA (SQFT)	VOLUME (CUFT)
SP_g_N	1.0	EXT	180.0	2.00	14.2	0.00	AIR-CHANGE	0.60	1275.00	12750.00
SP_g_S	1.0	EXT	0.0	2.00	14.2	0.00	AIR-CHANGE	0.60	1275.00	12750.00
SP_g_E	1.0	EXT	-90.0	2.00	5.8	0.00	AIR-CHANGE	0.60	525.00	5250.00
SP_g_W	1.0	EXT	90.0	2.00	5.8	0.00	AIR-CHANGE	0.60	525.00	5250.00
SP_g_C	1.0	INT	0.0	2.00	14.0	0.00	AIR-CHANGE	0.80	1400.00	14000.00
SP_1_N	1.0	EXT	180.0	2.00	14.2	0.00	AIR-CHANGE	0.60	1275.00	12750.00
SP_1_S	1.0	EXT	0.0	2.00	14.2	0.00	AIR-CHANGE	0.60	1275.00	12750.00
SP_1_E	1.0	EXT	-90.0	2.00	5.8	0.00	AIR-CHANGE	0.60	525.00	5250.00
SP_1_W	1.0	EXT	90.0	2.00	5.8	0.00	AIR-CHANGE	0.60	525.00	5250.00
SP_1_C	1.0	INT	0.0	2.00	14.0	0.00	AIR-CHANGE	0.80	1400.00	14000.00
SP_t_N	1.0	EXT	180.0	2.00	14.2	0.00	AIR-CHANGE	0.60	1275.00	12750.00
SP_t_S	1.0	EXT	0.0	2.00	14.2	0.00	AIR-CHANGE	0.60	1275.00	12750.00
SP_t_E	1.0	EXT	-90.0	2.00	5.8	0.00	AIR-CHANGE	0.60	525.00	5250.00
SP_t_W	1.0	EXT	90.0	2.00	5.8	0.00	AIR-CHANGE	0.60	525.00	5250.00
SP_t_C	1.0	EXT	0.0	2.00	14.0	0.00	AIR-CHANGE	0.80	1400.00	14000.00
BUILDING TOTALS					162.0				15000.00	150000.00

REPORT- LV-D DETAILS OF EXTERIOR SURFACES IN THE PROJECT WEATHER FILE- TRY CHICAGO

NUMBER OF EXTERIOR SURFACES 17 RECTANGULAR 17 OTHER 0
(U-VALUE INCLUDES OUTSIDE AIR FILM; WINDOW INCLUDES FRAME, IF DEFINED)

SURFACE	SPACE	WINDOWS U-VALUE (BTU/HR-SQFT-F)	WINDOWS AREA (SQFT)	WALL U-VALUE (BTU/HR-SQFT-F)	WALL AREA (SQFT)	WALL+WINDOWS U-VALUE (BTU/HR-SQFT-F)	WALL+WINDOWS AREA (SQFT)	AZIMUTH
	SP_g_S	0.926	200.00	0.067	800.00	0.239	1000.00	NORTH
	SP_1_S	0.926	300.00	0.067	700.00	0.325	1000.00	NORTH
	SP_t_S	0.926	300.00	0.067	700.00	0.325	1000.00	NORTH
	SP_1_W	0.926	150.00	0.067	350.00	0.325	500.00	EAST
	SP_g_W	0.926	100.00	0.067	400.00	0.239	500.00	EAST
	SP_t_W	0.926	150.00	0.067	350.00	0.325	500.00	EAST
	SP_t_N	0.926	300.00	0.067	700.00	0.325	1000.00	SOUTH
	SP_g_N	0.926	200.00	0.067	800.00	0.239	1000.00	SOUTH
	SP_1_N	0.926	300.00	0.067	700.00	0.325	1000.00	SOUTH
	SP_g_E	0.926	100.00	0.067	400.00	0.239	500.00	WEST
	SP_t_E	0.926	150.00	0.067	350.00	0.325	500.00	WEST
	SP_1_E	0.926	150.00	0.067	350.00	0.325	500.00	WEST
	SP_t_N	0.000	0.00	0.168	1275.00	0.168	1275.00	ROOF
	SP_t_E	0.000	0.00	0.168	525.00	0.168	525.00	ROOF
	SP_t_S	0.000	0.00	0.168	1275.00	0.168	1275.00	ROOF
	SP_t_W	0.000	0.00	0.168	525.00	0.168	525.00	ROOF
	SP_t_C	0.000	0.00	0.168	1400.00	0.168	1400.00	ROOF
	SP_g_N	0.000	0.00	0.050	1275.00	0.050	1275.00	UNDERGRND
	SP_g_S	0.000	0.00	0.050	1275.00	0.050	1275.00	UNDERGRND
	SP_g_E	0.000	0.00	0.050	525.00	0.050	525.00	UNDERGRND
	SP_g_W	0.000	0.00	0.050	525.00	0.050	525.00	UNDERGRND
	SP_g_C	0.000	0.00	0.050	1400.00	0.050	1400.00	UNDERGRND

REPORT- LV-D DETAILS OF EXTERIOR SURFACES IN THE PROJECT WEATHER FILE- TRY CHICAGO

(CONTINUED)

	AVERAGE U-VALUE/WINDOWS (BTU/HR-SQFT-F)	AVERAGE U-VALUE/WALLS (BTU/HR-SQFT-F)	AVERAGE U-VALUE WALLS+WINDOWS (BTU/HR-SQFT-F)	WINDOW AREA (SQFT)	WALL AREA (SQFT)	WINDOW+WALL AREA (SQFT)
NORTH	0.926	0.067	0.296	800.00	2200.00	3000.00
EAST	0.926	0.067	0.296	400.00	1100.00	1500.00
SOUTH	0.926	0.067	0.296	800.00	2200.00	3000.00
WEST	0.926	0.067	0.296	400.00	1100.00	1500.00
ROOF	0.000	0.168	0.168	0.00	5000.00	5000.00
ALL WALLS	0.926	0.067	0.296	2400.00	6600.00	9000.00
WALLS+ROOFS	0.926	0.111	0.250	2400.00	11600.00	14000.00
UNDERGRND	0.000	0.050	0.050	0.00	5000.00	5000.00
BUILDING	0.926	0.092	0.198	2400.00	16600.00	19000.00

REPORT- LV-F DETAILS OF INTERIOR SURFACES IN THE PROJECT WEATHER FILE- TRY CHICAGO

NUMBER OF INTERIOR SURFACES 34
(U-VALUE INCLUDES BOTH AIR FILMS)

SURFACE NAME	AREA (SQFT)	CONSTRUCTION NAME	SURFACE TYPE		U-VALUE (BTU/HR-SQFT-F)	ADJACENT SPACES SPACE-1	SPACE-2
	212.13	IWF-typ1	QUICK	STANDARD	0.500	SP_g_E	SP_g_N
	212.13	IWF-typ1	QUICK	STANDARD	0.500	SP_g_E	SP_g_S
	212.13	IWF-typ1	QUICK	STANDARD	0.500	SP_g_W	SP_g_N
	212.13	IWF-typ1	QUICK	STANDARD	0.500	SP_g_W	SP_g_S
	700.00	IWF-typ1	QUICK	STANDARD	0.500	SP_g_C	SP_g_S
	700.00	IWF-typ1	QUICK	STANDARD	0.500	SP_g_C	SP_g_N
	200.00	IWF-typ1	QUICK	STANDARD	0.500	SP_g_C	SP_g_E
	200.00	IWF-typ1	QUICK	STANDARD	0.500	SP_g_C	SP_g_W
	1275.00	IWF-typ1	QUICK	STANDARD	0.500	SP_1_N	SP_g_N
	1275.00	IWF-typ1	QUICK	STANDARD	0.500	SP_1_S	SP_g_S
	525.00	IWF-typ1	QUICK	STANDARD	0.500	SP_1_E	SP_g_E
	212.13	IWF-typ1	QUICK	STANDARD	0.500	SP_1_E	SP_1_N
	212.13	IWF-typ1	QUICK	STANDARD	0.500	SP_1_E	SP_1_S
	525.00	IWF-typ1	QUICK	STANDARD	0.500	SP_1_W	SP_g_W
	212.13	IWF-typ1	QUICK	STANDARD	0.500	SP_1_W	SP_1_N
	212.13	IWF-typ1	QUICK	STANDARD	0.500	SP_1_W	SP_1_S
	700.00	IWF-typ1	QUICK	STANDARD	0.500	SP_1_C	SP_1_S
	700.00	IWF-typ1	QUICK	STANDARD	0.500	SP_1_C	SP_1_N
	200.00	IWF-typ1	QUICK	STANDARD	0.500	SP_1_C	SP_1_E
	200.00	IWF-typ1	QUICK	STANDARD	0.500	SP_1_C	SP_1_W
	1400.00	IWF-typ1	QUICK	STANDARD	0.500	SP_1_C	SP_g_C
	1275.00	IWF-typ1	QUICK	STANDARD	0.500	SP_t_N	SP_1_N
	1275.00	IWF-typ1	QUICK	STANDARD	0.500	SP_t_S	SP_1_S
	525.00	IWF-typ1	QUICK	STANDARD	0.500	SP_t_E	SP_1_E
	212.13	IWF-typ1	QUICK	STANDARD	0.500	SP_t_E	SP_t_N
	212.13	IWF-typ1	QUICK	STANDARD	0.500	SP_t_E	SP_t_S
	525.00	IWF-typ1	QUICK	STANDARD	0.500	SP_t_W	SP_1_W
	212.13	IWF-typ1	QUICK	STANDARD	0.500	SP_t_W	SP_t_N
	212.13	IWF-typ1	QUICK	STANDARD	0.500	SP_t_W	SP_t_S
	700.00	IWF-typ1	QUICK	STANDARD	0.500	SP_t_C	SP_t_S
	700.00	IWF-typ1	QUICK	STANDARD	0.500	SP_t_C	SP_t_N
	200.00	IWF-typ1	QUICK	STANDARD	0.500	SP_t_C	SP_t_E
	200.00	IWF-typ1	QUICK	STANDARD	0.500	SP_t_C	SP_t_W
	1400.00	IWF-typ1	QUICK	STANDARD	0.500	SP_t_C	SP_1_C

REPORT- LS-D BUILDING MONTHLY LOADS SUMMARY WEATHER FILE- TRY CHICAGO

	COOLING						HEATING						ELEC	
MONTH	COOLING ENERGY (MBTU)	TIME OF MAX DY	TIME OF MAX HR	DRY-BULB TEMP	WET-BULB TEMP	MAXIMUM COOLING LOAD (KBTU/HR)	HEATING ENERGY (MBTU)	TIME OF MAX DY	TIME OF MAX HR	DRY-BULB TEMP	WET-BULB TEMP	MAXIMUM HEATING LOAD (KBTU/HR)	ELEC-TRICAL ENERGY (KWH)	MAXIMUM ELEC LOAD (KW)
JAN	2.94071	15	15	40.F	35.F	46.954	-100.090	12	8	-7.F	-7.F	-303.466	6471.	25.680
FEB	3.03121	9	16	23.F	19.F	78.665	-88.189	6	8	22.F	22.F	-244.194	5855.	25.680
MAR	4.78147	3	16	79.F	62.F	156.169	-67.232	24	8	6.F	5.F	-276.647	6780.	25.680
APR	18.25086	27	16	84.F	61.F	215.393	-31.668	8	8	30.F	27.F	-207.410	6780.	25.680
MAY	23.73145	21	13	85.F	75.F	232.219	-18.483	6	7	37.F	33.F	-117.475	6163.	25.680
JUN	44.88414	4	15	85.F	67.F	243.338	-5.474	1	5	48.F	47.F	-70.638	6780.	25.680
JUL	69.09688	13	15	97.F	77.F	302.914	-1.320	6	4	60.F	54.F	-37.546	6780.	25.680
AUG	55.78048	26	16	94.F	76.F	272.907	-2.272	5	5	55.F	54.F	-49.795	6471.	25.680
SEP	34.12464	11	15	86.F	72.F	250.087	-13.255	22	5	35.F	31.F	-111.728	6780.	25.680
OCT	16.95434	5	15	74.F	62.F	167.687	-28.918	21	5	30.F	29.F	-137.386	6471.	25.680
NOV	6.33158	2	14	75.F	61.F	167.828	-62.562	15	4	26.F	25.F	-178.102	5855.	25.680
DEC	2.91600	10	15	41.F	35.F	59.871	-90.931	26	7	15.F	15.F	-212.285	6780.	25.680
TOTAL	282.824						-510.395						77965.	
MAX						302.914						-303.466		25.680

Metric Input/Output Example

```
                L D L   P R O C E S S O R   I N P U T   D A T A

                     Thu Nov 11 11:30:36 1993LDL RUN  1


*   1 * INPUT LOADS  INPUT-UNITS=METRIC  OUTPUT-UNITS=METRIC ..
*   2 *
*   3 * TITLE LINE-1 * METRIC INPUT/OUTPUT EXAMPLE *
*   4 *       LINE-2 * SMALL BAR/LOUNGE *
*   5 *       LINE-3 * SYSTEM 4: PKG PSZ WATER-COOLED UNIT *
*   6 *       LINE-4 * WITH WATER-SIDE ECONOMIZER * ..
*   7 *
*   8 * $ Note: a metric LOADS input will not work with the
*   9 * $ preassembled materials and constructions library, BDLLIB,
*  10 * $ which is in English units. You will have to create your
*  11 * $ own metric version of BDLLIB by doing a LIBRARY-INPUT LOADS
*  12 * $ run with INPUT-UNITS=METRIC (see Reference Manual (2.1A),
*  13 * $ pp. II.21,147,152). Alternatively, as in this example,
*  14 * $ you can remove BDLLIB from your run control file and enter
*  15 * $ metric constructions in your LOADS input using the MATERIALS,
*  16 * $ LAYERS and CONSTRUCTION commands.
*  17 *
*  18 * $ This example demonstrates how LOADS hourly report variables
*  19 * $ can be passed to SYSTEMS and printed in SYSTEMS hourly
*  20 * $ reports.
*  21 *
*  22 * ABORT ERRORS ..  LIST WARNINGS ..
*  23 *
*  24 * RUN-PERIOD    JAN 1 1988 THRU DEC 31 1988  ..
*  25 *
*  26 * $ CHICAGO $
*  27 * BUILDING-LOCATION  LATITUDE=42
*  28 *                     LONGITUDE=88
*  29 *                     ALTITUDE=186 $ meters $
*  30 *                     TIME-ZONE=6
*  31 *                     AZIMUTH=0  ..
*  32 *
*  33 * LOADS-REPORT   SUMMARY=(LS-A,LS-C,LS-D)
*  34 *                VERIFICATION=(LV-C,LV-M) ..
*  35 *
*  36 *    $ OCCUPANCY $
*  37 *
*  38 * OC1 = DAY-SCHEDULE (1,24) VALUES=(.2,.2,0,0,0,0,
*  39 *            .4,.4,.2,.2,.2,.3,.6,.1,.1,.1,.5,.7,.5,.5,.7,.8,.8,.6)  ..
*  40 * OC2 = DAY-SCHEDULE (1,24) VALUES=(.4,.4,0,0,0,0,
*  41 *            .2,.2,.1,.1,.1,.2,.4,.2,.2,.2,.5,.7,.8,.8,.9,.9,.9,.5)  ..
*  42 * OC3 = DAY-SCHEDULE (1,24) VALUES=(.4,.4,0,0,0,0,
*  43 *            0,0,0,.2,.3,.4,.5,.5,.6,.7,.7,.8,.8,.6,.5,.5,.6,.6)  ..
*  44 * OCCUP = SCHEDULE  THRU DEC 31 (WD) OC1 (SAT) OC2 (SUN,HOL) OC3  ..
*  45 *
*  46 *    $ LIGHTING $
*  47 *
*  48 * L1 = DAY-SCHEDULE (1,2) VALUES=(.5) (3,6) (.1) (7,9) (.5)
*  49 *            (10,18) (.4) (19,24) (1)  ..
*  50 * L2 = DAY-SCHEDULE (1,2) VALUES=(.5) (3,6) (.1) (7,12) (.5)
*  51 *            (13,18) (.8) (19,24) (1)  ..
*  52 * L3 = DAY-SCHEDULE (1,2) VALUES=(.5) (3,9) (.1) (10,12) (.4)
*  53 *            (13,17) (.6) (18,19) (1) (20,24) (.5)  ..
*  54 * LIGHTS = SCHEDULE  THRU DEC 31 (WD) L1 (SAT) L2 (SUN,HOL) L3  ..
*  55 *
*  56 *   $ CONSTRUCTIONS $
*  57 *
*  58 * WDSHINGLE = MATERIAL THICKNESS     = .0178  $ m $
```

```
*  59 *                        CONDUCTIVITY  = .1154  $ W/m-K $
*  60 *                        DENSITY       = 512.6  $ kg/m3 $
*  61 *                        SPECIFIC-HEAT = 1255   $ J/kg-K $ ..
*  62 *
*  63 * PLYWOOD    = MATERIAL THICKNESS     = .0127  $ m $
*  64 *                        CONDUCTIVITY  = .1154  $ W/m-K $
*  65 *                        DENSITY       = 544.6  $ kg/m3 $
*  66 *                        SPECIFIC-HEAT = 1213   $ J/kg-K $ ..
*  67 *
*  68 * POLYSTYR   = MATERIAL THICKNESS     = .0191  $ m $
*  69 *                        CONDUCTIVITY  = .0346  $ W/m-K $
*  70 *                        DENSITY       = 28.8   $ kg/m3 $
*  71 *                        SPECIFIC-HEAT = 1213   $ J/kg-K $ ..
*  72 *
*  73 * GYPBOARD   = MATERIAL THICKNESS     = .0191  $ m $
*  74 *                        CONDUCTIVITY  = .1602  $ W/m-K $
*  75 *                        DENSITY       = 800.9  $ kg/m3 $
*  76 *                        SPECIFIC-HEAT = 837    $ J/kg-K $ ..
*  77 *
*  78 * BUILTUPRF = MATERIAL THICKNESS     = .0095  $ m $
*  79 *                        CONDUCTIVITY  = .1624  $ W/m-K $
*  80 *                        DENSITY       = 1121.3 $ kg/m3 $
*  81 *                        SPECIFIC-HEAT = 1464   $ J/kg-K $ ..
*  82 *
*  83 * ACOUSTILE = MATERIAL THICKNESS     = .0127  $ m $
*  84 *                        CONDUCTIVITY  = .0571  $ W/m-K $
*  85 *                        DENSITY       = 288.3  $ kg/m3 $
*  86 *                        SPECIFIC-HEAT = 1339   $ J/kg-K $ ..
*  87 *
*  88 * AIRLAYER   = MATERIAL RESISTANCE    = .162   $ m2-K/W $ ..
*  89 *
*  90 *
*  91 * WA1=LAYERS  MATERIAL = (WDSHINGLE,PLYWOOD,POLYSTYR,GYPBOARD)  ..
*  92 * RF1=LAYERS  MATERIAL = (BUILTUPRF,PLYWOOD,POLYSTYR,AIRLAYER,ACOUSTILE)
*  93 *             INSIDE-FILM-RES    = .108 $ m2K/W $  ..
*  94 *
*  95 * S-WALL     = CONSTRUCTION  LAYERS=WA1  ..
*  96 * ROF        = CONSTRUCTION  LAYERS=RF1  ..
*  97 * POUND      = CONSTRUCTION  U-VALUE=1.48  $ W/m2-K $  ..
*  98 * DR1        = CONSTRUCTION  U-VALUE=3.35  $ W/m2-K $  ..
*  99 * GLASS1     = GLASS-TYPE    GLASS-TYPE-CODE=3  PANES=1 ..  $ CLEAR 6.3mm PLATE
* 100 *
* 101 * SET-DEFAULT FOR EXTERIOR-WALL  HEIGHT=4.88  $ m $
* 102 *                               CONSTRUCTION=S-WALL  ..
* 103 *
* 104 * SET-DEFAULT FOR WINDOW         GLASS-TYPE=GLASS1  HEIGHT=3.66 $ m $ ..
* 105 *
* 106 * BLDG=     SPACE  AREA              = 200.72  $ m2 $
* 107 *                  VOLUME            = 734.0   $ m3 $
* 108 *                  LIGHTING-W/AREA   = 11.4    $ W/m2 $
* 109 *                  LIGHTING-SCHEDULE = LIGHTS
* 110 *                  LIGHTING-TYPE     = REC-FLUOR-NV
* 111 *                  LIGHT-TO-SPACE    = 1.0
* 112 *                  EQUIPMENT-W/AREA  = 5.38    $ W/m2 $
* 113 *                  EQUIP-SCHEDULE    = LIGHTS
* 114 *                  AREA/PERSON       = 4.18    $ m2 $
* 115 *                  PEOPLE-HEAT-GAIN  = 161     $ W $
* 116 *                  PEOPLE-SCHEDULE   = OCCUP
* 117 *                  INF-METHOD        = AIR-CHANGE
* 118 *                  AIR-CHANGES/HR    = .3
* 119 *                  INF-SCHEDULE      = OCCUP ..
* 120 *
* 121 *             EXTERIOR-WALL  WIDTH=12.19 $ m $  AZIMUTH=0  ..
* 122 *
* 123 *             EXTERIOR-WALL  WIDTH=16.46 $ m $  AZIMUTH=90  ..
```

```
* 124 *
* 125 *              DOOR          HEIGHT=2.13 $ m $
* 126 *                            WIDTH=0.91  $ m $
* 127 *                            CONSTRUCTION=DR1  ..
* 128 *
* 129 *            EXTERIOR-WALL  WIDTH=12.19 $ m $  AZIMUTH=180  ..
* 130 *
* 131 *      WIN-1 = WINDOW       WIDTH=9.14  $ m $
* 132 *                           OVERHANG-W=15.24 $ m $
* 133 *                           OVERHANG-D=3.05  $ m $
* 134 *                           OVERHANG-A=3.05  $ m $
* 135 *                           OVERHANG-B=0.61  $ m $ ..
* 136 *
* 137 *            $ WEST WALL ABUTS ADJOINING BUILDING $
* 138 *
* 139 *            UNDERGROUND-WALL  AREA=15.79  $ m2 $
* 140 *                              CONSTRUCTION=FOUND  ..
* 141 *
* 142 *            ROOF              HEIGHT=12.19  $ m $
* 143 *                              WIDTH=16.46  $ m $
* 144 *                              CONSTRUCTION=ROF
* 145 *                              TILT=0 ..
* 146 *
* 147 * $ Example of passing LOADS hourly report variables to
* 148 * $ SYSTEMS hourly reports
* 149 *
* 150 *   HR-SCH-1     =SCHEDULE        THRU JAN 4  (ALL)(1,24) VALUES=(0)
* 151 *                                 THRU JAN 5  (ALL)(1,24) VALUES=(1)
* 152 *                                 THRU DEC 31 (ALL)(1,24) VALUES=(0) ..
* 153 *
* 154 *     LRB-1      =REPORT-BLOCK       VARIABLE-TYPE=GLOBAL
* 155 *                 VARIABLE-LIST=(15) .. $ total horizontal solar $
* 156 *
* 157 *     LRB-2      =REPORT-BLOCK       VARIABLE-TYPE=WIN-1
* 158 *                 VARIABLE-LIST=(15) .. $ solar gain thru window $
* 159 *
* 160 *     LDS-REP-1  =HOURLY-REPORT      REPORT-SCHEDULE=HR-SCH-1
* 161 *                 OPTION=BINARY-FILE $ to pass Loads hourly variables
* 162 *                                    $ to Systems
* 163 *                 REPORT-BLOCK=(LRB-1,LRB-2) ..
* 164 *
* 165 * END  ..
* 166 * COMPUTE LOADS  ..
* 167 * INPUT SYSTEMS  INPUT-UNITS=METRIC  OUTPUT-UNITS=METRIC ..
```

```
* 168 *
* 169 * SYSTEMS-REPORT   SUMMARY=(SS-A,SS-J,SS-O) ...
* 170 *
* 171 * FANSON  = SCHEDULE  THRU DEC 31 (MON,SAT) (1,24) VALUES=(1)
* 172 *                        (SUN,HOL) (1,2) VALUES=(1) (3,9)(0) (10,24)(1)  ..
* 173 * C-SETPT = SCHEDULE  THRU DEC 31 (ALL) (1,24) TEMP=(24.4) .. $ deg C $
* 174 * H-SETPT = SCHEDULE  THRU DEC 31 (ALL) (1,24) TEMP=(22.2) .. $ deg C $
* 175 *
* 176 * ENV     = ZONE-CONTROL  DESIGN-HEAT-T = 22.2 $ deg C $
* 177 *                         DESIGN-COOL-T = 23.3 $ deg C $
* 178 *                         HEAT-TEMP-SCH = H-SETPT
* 179 *                         COOL-TEMP-SCH = C-SETPT    ..
* 180 *
* 181 * BLDG    = ZONE          ZONE-CONTROL  = ENV
* 182 *                         OA-FLOW/PER   = 25.5 $ m3/h $
* 183 *                         FLOW/AREA     = 12.8 $ m3/h-m2 $  ..
* 184 *
* 185 *
* 186 * SYS1 =SYSTEM  SYSTEM-TYPE      = PSZ
* 187 *               OA-CONTROL       = FIXED
* 188 *               SUPPLY-FLOW      = 4748   $ m3/h $
* 189 *               HEATING-CAPACITY = -35145 $ W $
* 190 *               MAX-SUPPLY-T     = 37.8   $ deg C $
* 191 *               MIN-SUPPLY-T     = 12.8   $ deg C $
* 192 *               SUPPLY-STATIC    = 63.5   $ mm water $
* 193 *               SUPPLY-EFF       = .47
* 194 *               SIZING-RATIO     = 1.2
* 195 *               COOL-SIZING-RAT  = .833
* 196 *               HEAT-SIZING-RAT  = .75
* 197 *               F-SCH            = FANSON
* 198 *               ZONE-NAMES       = (BLDG)
* 199 *               WS-ECONO         = YES
* 200 *               CONDENSER-TYPE   = WATER-COOLED ..
* 201 *
* 202 * WS-ECON =PLANT-ASSIGNMENT
* 203 *               SYSTEM-NAMES     = (SYS1)
* 204 *               CIRC-PUMP-TYPE   = VARIABLE-FLOW
* 205 *               TWR-SET-POINT    = 12.8   $ deg C $
* 206 *               MIN-TWR-WTR-T    = 12.8   $ deg C $
* 207 *               DHW-FLOW         = 2.52   $ liters/min $
* 208 *               DHW-SCH          = DOMHW  ..
* 209 *
* 210 * D1 = DAY-SCHEDULE    (1,7) VALUES=(0)
* 211 *                      (8,21) (.1,.2,.3,.4,.55,.6,.6,.45,.4,.45,.45,.4,.3,.3)
* 212 *                      (22,24) (0)  ..
* 213 * D2 = DAY-SCHEDULE    (1,7) VALUES=(0)
* 214 *                      (8,22) (.15,.2,.25,.4,.5,.55,.55,.45,.45,.45,.45,.4,.35,
* 215 *                      .25,.2)  (23,24) (0)  ..
* 216 * D3 = DAY-SCHEDULE    (1,9) VALUES=(0)
* 217 *                      (10,19) (.1,.25,.3,.35,.35,.3,.3,.35,.3,.2)
* 218 *                      (20,24) (0)  ..
* 219 * DOMHW = SCHEDULE      THRU DEC 31 (WD) D1  (SAT) D2  (SUN,HOL) D3  ..
* 220 *
* 221 * HR-SCH-2     =SCHEDULE        THRU JAN 4  (ALL)(1,24) VALUES=(0)
* 222 *                               THRU JAN 5  (ALL)(1,24) VALUES=(1)
* 223 *                               THRU DEC 31 (ALL)(1,24) VALUES=(0) ..
* 224 *
```

```
* 225 * SRB-1      =REPORT-BLOCK    VARIABLE-TYPE=LOADS-DATA $ to get hourly $
* 226 *                                                     $ variables from Loads $
* 227 *              VARIABLE-LIST=(1) ..
* 228 *
* 229 * SRB-2      =REPORT-BLOCK    VARIABLE-TYPE=GLOBAL
* 230 *              VARIABLE-LIST=(8) .. $ outside drybulb $
* 231 *
* 232 * SRB-3      =REPORT-BLOCK    VARIABLE-TYPE=BLDG
* 233 *              VARIABLE-LIST=(6,7,8) .. $ zone temp, temp setp, extract rate $
* 234 *
* 235 * SYS-REP-1  =HOURLY-REPORT   REPORT-SCHEDULE=HR-SCH-2
* 236 *              REPORT-BLOCK=(SRB-1,SRB-2,SRB-3) ..
* 237 *
* 238 * END  ..
* 239 * COMPUTE SYSTEMS  ..
* 240 *
* 241 * INPUT PLANT  INPUT-UNITS=METRIC  OUTPUT-UNITS=METRIC ..
```

P D L P R O C E S S O R I N P U T D A T A

Thu Nov 11 11:30:36 1993PDL RUN 1

```
* 242 *
* 243 * WS-ECON = PLANT-ASSIGNMENT  ..
* 244 * PLANT-REPORT          SUMMARY=(BEPS,BEPU)  ..
* 245 *
* 246 * DWH= PLANT-EQUIPMENT  TYPE= DHW-HEATER
* 247 *                      SIZE= .0088 ..    $ Megawatts $
* 248 *
* 249 * $ Choose cubic meters as the unit for natural gas: $
* 250 *
* 251 * ENERGY-RESOURCE       RESOURCE = NATURAL-GAS
* 252 *                      ENERGY/UNIT = 10860  $ Wh/m3, based on 1050 Btu/ft3 $
* 253 *                      UNIT-NAME   = M3
* 254 *                      DEM-UNIT-NAME = M3/HR ..
* 255 *
* 256 * END  ..
* 257 * COMPUTE PLANT  ..
* 258 *
* 259 * INPUT ECONOMICS  INPUT-UNITS=METRIC  OUTPUT-UNITS=METRIC ..
```

E D L P R O C E S S O R I N P U T D A T A

Thu Nov 11 11:30:36 1993EDL RUN 1

```
* 260 *
* 261 * ECONOMICS-REPORT  SUMMARY=(ES-D,ES-E)  ..
* 262 *
* 263 * $ following costs are in US dollars $
* 264 *
* 265 * ELEC-COST = UTILITY-RATE  RESOURCE = ELECTRICITY
* 266 *                           MONTH-CHGS = (21.75)
* 267 *                           DEMAND-CHGS = (.81)
* 268 *                           BLOCK-CHARGES = (E-SM,E-WN)  ..
* 269 *
* 270 * E-SM      = BLOCK-CHARGE  BLOCK-SCH   = SEASON
* 271 *                           SCH-FLAG    = 2
* 272 *                           BLOCK1-TYPE = ENERGY
* 273 *                           BLOCK1-DATA = (1250,.0829)
* 274 *                           BLOCK2-TYPE = KWH/KW
* 275 *                           BLOCK2-DATA = (125,.0829,0
* 276 *                                            1,.0514,0)  ..
* 277 *
* 278 * E-WN      = BLOCK-CHARGE  BLOCK-SCH   = SEASON
* 279 *                           SCH-FLAG    = 1
* 280 *                           BLOCK1-TYPE = ENERGY
* 281 *                           BLOCK1-DATA = (1250,.0778)
* 282 *                           BLOCK2-TYPE = KWH/KW
* 283 *                           BLOCK2-DATA = (125,.0778,0,
* 284 *                                            1,.0514,0)  ..
* 285 *
* 286 * SEASON    = SCHEDULE THRU APR 30 (ALL) (1,24) VALUES=(1)
* 287 *                    THRU OCT 31 (ALL) (1,24) VALUES=(2)
* 288 *                    THRU DEC 31 (ALL) (1,24) VALUES=(1)  ..
* 289 *
* 290 * GAS-COST  = UTILITY-RATE  RESOURCE = NATURAL-GAS
* 291 *                           MONTH-CHGS = (10.73)
* 292 *                           BLOCK-CHARGES = (GAS-CH)  ..
* 293 *
* 294 * $ 0.22 dollars/m3 for first 1200 m3, 0.15 dollars/m3 above that: $
* 295 *
* 296 * GAS-CH    = BLOCK-CHARGE  BLOCK1-TYPE = ENERGY
* 297 *                           BLOCK1-DATA = (1200,.22,
* 298 *                                            1,.15)  ..
* 299 *
* 300 * END  ..
* 301 * COMPUTE ECONOMICS  ..

****************************** END-OF-FILE READ ON INPUT FILE.
```

DOE-2 UNITS TABLE

	ENGLISH	MULTIPLIED BY	GIVES	METRIC	MULTIPLIED BY	GIVES	ENGLISH
1			1.000000			1.000000	
2			1.000000			1.000000	
3	BTU		0.293000	WH		3.412969	BTU
4	BTU/HR		0.293000	WATT		3.412969	BTU/HR
5	BTU/LB-F		4183.830078	J/KG-K		0.000239	BTU/LB-F
6	BTU/HR-SQFT-F		5.674460	W/M2-K		0.176228	BTU/HR-SQFT-F
7	DEGREES		1.000000	DEGREES		1.000000	DEGREES
9	SQFT		0.092903	M2		10.763915	SQFT
10	CUFT		0.028317	M3		35.314724	CUFT
11	LB/HR		0.453592	KG/HR		2.204624	LB/HR
12	LB/CUFT		16.018459	KG/M3		0.062428	LB/CUFT
13	MPH		0.447040	M/S		2.236936	MPH
14	BTU/HR-F		0.527178	W/K		1.896893	BTU/HR-F
15	FT		0.304800	M		3.280840	FT
16	BTU/HR-FT-F		1.729600	W/M-K		0.578168	BTU/HR-FT-F
17	BTU/HR- SQFT		3.152480	WATT /M2		0.317211	BTU/HR- SQFT
18	IN		2.540000	CM		0.393701	IN
19	UNITS/IN		0.393700	UNITS/CM		2.540005	UNITS/IN
20	UNITS		1.000000	UNITS		1.000000	UNITS
21	LB		0.453592	KG		2.204624	LB
22	FRAC.OR MULT.		1.000000	FRAC.OR MULT.		1.000000	FRAC.OR MULT.
23	HOURS		1.000000	HRS		1.000000	HOURS
24	PERCENT-RH		1.000000	PERCENT-RH		1.000000	PERCENT-RH
25	CFM		1.699010	M3/H		0.588578	CFM
26	IN-WATER		25.400000	MM-WATER		0.039370	IN-WATER
27	LB/SQFT		4.882400	KG/M2		0.204817	LB/SQFT
28	KW		1.000000	KW		1.000000	KW
29	W/SQFT		10.763920	W/M2		0.092903	W/SQFT
30	THERMS		25.000000	THERMIES		0.040000	THERMS
31	KNOTS		0.514440	M/SEC		1.943861	KNOTS
32	HR-SQFT-F /BTU		0.176228	M2-K /W		5.674467	HR-SQFT-F /BTU
33	$DOLLARS		1.000000	$DOLLARS		1.000000	$DOLLARS
34	MBTU/HR		0.293000	MWATT		3.412969	MBTU/HR
35	YEARS		1.000000	YEARS		1.000000	YEARS
36	$/HR		1.000000	$/HR		1.000000	$/HR
37	HRS/YEARS		1.000000	HRS/YEARS		1.000000	HRS/YEARS
38	PERCENT		1.000000	PERCENT		1.000000	PERCENT
39	$/MONTH		1.000000	$/MONTH		1.000000	$/MONTH
40	GALLONS/MIN/TON		1.078000	LITERS/MIN/KW		0.927644	GALLONS/MIN/TON
41	BTU/LB		0.645683	WH/KG		1.548748	BTU/LB
42	LBS/SQIN-GAGE		68.947571	MBAR-GAGE		0.014504	LBS/SQIN-GAGE
43	$/UNIT		1.000000	$/UNIT		1.000000	$/UNIT
44	BTU/HR/PERSON		0.293000	W/PERSON		3.412969	BTU/HR/PERSON
45	LBS/LB		1.000000	KGS/KG		1.000000	LBS/LB
46	BTU/BTU		1.000000	KWH/KWH		1.000000	BTU/BTU
47	LBS/KW		0.453590	KG/KW		2.204634	LBS/KW
48	REV/MIN		1.000000	REV/MIN		1.000000	REV/MIN
49	KW/TON		1.000000	KW/TON		1.000000	KW/TON
50	MBTU		0.293000	MWH		3.412969	MBTU
51	GAL		3.785410	LITER		0.264172	GAL
52	GAL/MIN		3.785410	LITERS/MIN		0.264172	GAL/MIN
53	BTU/F		1897.800049	J/K		0.000527	BTU/F
54	UNITS/HR		1.000000	UNITS/HR		1.000000	UNITS/HR
55	$/UNIT-HR		1.000000	$/UNIT-HR		1.000000	$/UNIT-HR
56	KW/CFM		0.588500	KW/M3/HR		1.699235	KW/CFM
57	BTU/SQFT-F		20428.400391	J/M2-K		0.000049	BTU/SQFT-F
58	HR/HR		1.000000	HR/HR		1.000000	HR/HR

59	BTU/FT-F	6226.479980	J/M-K	0.000161	BTU/FT-F
60	R	0.555556	K	1.799999	R
61	INCH MER	33.863800	MBAR	0.029530	INCH MER
62	UNITS/GAL/MIN	0.264170	UNITS/LITER/MIN	3.785441	UNITS/GAL/MIN
63	(HR-SQFT-F/BTU)2	0.031056	(M2-K /W)2	32.199585	(HR-SQFT-F/BTU)2
64	KBTU/HR	0.293000	KW	3.412969	KBTU/HR
65	KBTU	0.293000	KWH	3.412969	KBTU
66	CFM	0.471900	L/S	2.119093	CFM
67	CFM/SQFT	18.288000	M3/H-M2	0.054681	CFM/SQFT
68	1/R	1.799900	1/K	0.555586	1/R
69	1/KNOT	1.943860	SEC/M	0.514440	1/KNOT
70	FOOTCANDLES	10.763910	LUX	0.092903	FOOTCANDLES
71	FOOTLAMBERT	3.426259	CANDELA/M2	0.291864	FOOTLAMBERT
72	LUMEN / WATT	1.000000	LUMEN / WATT	1.000000	LUMEN / WATT
73	KBTU/SQFT-YR	3.152480	KWH/M2-YR	0.317211	KBTU/SQFT-YR

DATA FOR SPACE BLDG

LOCATION OF ORIGIN IN BUILDING COORDINATES XB (M)	YB (M)	ZB (M)	SPACE AZIMUTH (DEG)	SPACE*FLOOR MULTIPLIER	HEIGHT (M)	AREA (M2)	VOLUME (M3)
0.00	0.00	0.00	0.00	1.0	3.66	200.72	734.00

TOTAL NUMBER OF SURFACES	NUMBER OF EXTERIOR SURFACES	NUMBER OF INTERIOR SURFACES	NUMBER OF UNDERGROUND SURFACES	DAYLIGHTING	SUNSPACE
5	4	0	1	NO	NO

NUMBER OF SUBSURFACES

TOTAL	EXTERIOR WINDOWS	DOORS	INTERIOR WINDOWS
2	1	1	0

FLOOR WEIGHT (KG/M2)	CALCULATION TEMPERATURE (C)
341.8	21.1

INFILTRATION

SCHEDULE	INFILTRATION CALCULATION METHOD	FLOW RATE (M3/H-M2)	AIR CHANGES PER HOUR	HEIGHT TO NEUTRAL ZONE (M)
OCCUP	AIR-CHANGE	0.00	0.30	0.0

PEOPLE

SCHEDULE	NUMBER	AREA PER PERSON (M2)	PEOPLE ACTIVITY (WATT)	PEOPLE SENSIBLE (WATT)	PEOPLE LATENT (WATT)
OCCUP	48.0	4.2	161.0	0.0	0.0

LIGHTING

SCHEDULE	LIGHTING TYPE	LOAD (WATTS/ M2)	LOAD (KW)	FRACTION OF LOAD TO SPACE
LIGHTS	REC-FLUOR-NV	11.40	0.00	1.00

ELECTRICAL EQUIPMENT

SCHEDULE	ELEC LOAD (WATTS/ M2)	ELEC LOAD (KW)	FRACTION OF LOAD TO SPACE SENSIBLE	LATENT
LIGHTS	5.38	0.00	1.00	0.00

EXTERIOR SURFACES (U-VALUE EXCLUDES OUTSIDE AIR FILM)

SURFACE	MULTIPLIER	AREA (M2)	WIDTH (M)	HEIGHT (M)	CONSTRUCTION	U-VALUE (W/M2-K)	SURFACE TYPE
	1.0	59.49	12.19	4.88	S-WALL	0.948	DELAYED
	1.0	80.32	16.46	4.88	S-WALL	0.948	DELAYED
	1.0	59.49	12.19	4.88	S-WALL	0.948	DELAYED
	1.0	200.65	16.46	12.19	ROF	0.824	DELAYED

SURFACE	AZIMUTH (DEG)	TILT (DEG)	LOCATION OF ORIGIN IN BUILDING COORDINATES XB (M)	YB (M)	ZB (M)	LOCATION OF ORIGIN IN SPACE COORDINATES X (M)	Y (M)	Z (M)
	0.0	90.0	0.00	0.00	0.00	0.00	0.00	0.00
	90.0	90.0	0.00	0.00	0.00	0.00	0.00	0.00
	180.0	90.0	0.00	0.00	0.00	0.00	0.00	0.00
	0.0	0.0	0.00	0.00	0.00	0.00	0.00	0.00

UNDERGROUND SURFACES (U-VALUE INCLUDES INSIDE AIR FILM)

SURFACE	MULTIPLIER	AREA (M2)	CONSTRUCTION	U-VALUE (W/M2-K)
	1.0	15.79	FOUND	1.48

EXTERIOR WINDOWS (U-VALUE INCLUDES OUTSIDE AIR FILM)

WINDOW	MULTIPLIER	GLASS AREA (M2)	GLASS SHADING COEFF	NUMBER OF PANES	GLASS TYPE CODE	SET-BACK (M)	GLASS WIDTH (M)	GLASS HEIGHT (M)	CENTER-OF-GLASS U-VALUE (W/M2-K)	GLASS VISIBLE TRANS
WIN-1	1.0	33.45	1.00	1	3	0.00	9.14	3.66	5.796	0.900

WINDOW	LOCATED IN SURFACE	LOCATION OF ORIGIN IN BUILDING COORDINATES XB (M)	YB (M)	ZB (M)	LOCATION OF ORIGIN IN SURFACE COORDINATES X (M)	Y (M)
WIN-1		0.00	0.00	0.00	0.00	0.00

*** BUILDING ***

FLOOR AREA	2161	SQFT	201	SQMT
VOLUME	25921	CUFT	734	CUMT

	COOLING LOAD		HEATING LOAD	
TIME	JUN 20 4PM		JAN 12 6AM	
DRY-BULB TEMP	90F	32C	-5F	-21C
WET-BULB TEMP	77F	25C	-6F	-21C

	SENSIBLE (KBTU/H)	SENSIBLE (KW)	LATENT (KBTU/H)	LATENT (KW)	SENSIBLE (KBTU/H)	SENSIBLE (KW)
WALL CONDUCTION	8.115	2.378	0.000	0.000	-19.543	-5.726
ROOF CONDUCTION	17.543	5.140	0.000	0.000	-22.561	-6.610
WINDOW GLASS+FRM COND	5.604	1.642	0.000	0.000	-21.145	-6.195
WINDOW GLASS SOLAR	10.594	3.104	0.000	0.000	1.840	0.539
DOOR CONDUCTION	0.333	0.097	0.000	0.000	-0.713	-0.209
INTERNAL SURFACE COND	0.000	0.000	0.000	0.000	0.000	0.000
UNDERGROUND SURF COND	-0.532	-0.156	0.000	0.000	-1.330	-0.390
OCCUPANTS TO SPACE	8.350	2.446	8.954	2.624	1.323	0.388
LIGHT TO SPACE	4.125	1.209	0.000	0.000	2.187	0.641
EQUIPMENT TO SPACE	2.032	0.595	0.000	0.000	0.819	0.240
PROCESS TO SPACE	0.000	0.000	0.000	0.000	0.000	0.000
INFILTRATION	1.497	0.439	2.815	0.825	0.000	0.000
TOTAL	57.658	16.894	11.770	3.449	-59.122	-17.323
TOTAL LOAD	69.428 KBTU/H		20.342 KW		-59.122 KBTU/H	-17.323 KW
TOTAL LOAD / AREA	32.13BTU/H.SQFT		101.348 W /SQMT		27.365BTU/H.SQFT	86.304 W /SQMT

```
*************************************************************
*                                                           *
*  NOTE  1)THE ABOVE LOADS EXCLUDE OUTSIDE VENTILATION AIR  *
*  ----     LOADS                                           *
*        2)TIMES GIVEN IN STANDARD TIME FOR THE LOCATION    *
*          IN CONSIDERATION                                 *
*                                                           *
*************************************************************
```

METRIC INPUT/OUTPUT EXAMPLE SMALL BAR/LOUNGE DOE-2.1E-001 Thu Nov 11 11:30:36 1993LDL RUN 1
SYSTEM 4: PKG PSZ WATER-COOLED UNIT WITH WATER-SIDE ECONOMIZER
REPORT- LS-D BUILDING MONTHLY LOADS SUMMARY WEATHER FILE- TRY CHICAGO

	COOLING						HEATING						ELEC	
MONTH	COOLING ENERGY (MWH)	TIME OF MAX DY	TIME OF MAX HR	DRY-BULB TEMP	WET-BULB TEMP	MAXIMUM COOLING LOAD (KW)	HEATING ENERGY (MWH)	TIME OF MAX DY	TIME OF MAX HR	DRY-BULB TEMP	WET-BULB TEMP	MAXIMUM HEATING LOAD (KW)	ELEC-TRICAL ENERGY (KWH)	MAXIMUM ELEC LOAD (KW)
JAN	0.14665	25	13	7.C	4.C	7.095	-5.189	12	6	-21.C	-21.C	-17.323	1308.	3.368
FEB	0.19079	17	13	4.C	1.C	7.393	-4.385	4	6	-14.C	-14.C	-15.216	1180.	3.368
MAR	0.28203	3	17	26.C	16.C	7.694	-2.909	24	6	-13.C	-14.C	-15.061	1313.	3.368
APR	1.52560	27	17	29.C	17.C	11.227	-1.209	9	5	-3.C	-4.C	-9.629	1271.	3.368
MAY	2.43285	21	12	31.C	24.C	14.436	-0.547	7	5	1.C	-2.C	-7.902	1308.	3.368
JUN	4.07833	20	15	32.C	25.C	16.894	-0.127	1	5	9.C	8.C	-3.853	1271.	3.368
JUL	5.99154	13	17	37.C	25.C	16.233	-0.011	6	5	16.C	13.C	-1.592	1315.	3.368
AUG	5.10707	22	14	28.C	21.C	15.445	-0.018	5	5	13.C	12.C	-2.203	1306.	3.368
SEP	2.69067	19	15	30.C	18.C	13.267	-0.392	23	5	2.C	1.C	-7.410	1264.	3.368
OCT	1.62448	10	15	20.C	12.C	11.420	-0.983	21	5	-1.C	-2.C	-8.982	1308.	3.368
NOV	0.61120	2	13	23.C	16.C	13.387	-2.679	15	6	-2.C	-3.C	-10.955	1257.	3.368
DEC	0.06493	10	15	5.C	2.C	6.029	-4.625	26	7	-9.C	-9.C	-13.919	1299.	3.368
TOTAL	24.746						-23.072						15401.	
MAX						16.894						-17.323		3.368

SYSTEM NAME	SYSTEM TYPE	ALTITUDE MULTIPLIER	FLOOR AREA (M2)	MAX PEOPLE
SYS1	PSZ	1.020	200.7	48.

SUPPLY FAN (M3/H)	ELEC (KW)	DELTA-T (C)	RETURN FAN (M3/H)	ELEC (KW)	DELTA-T (C)	OUTSIDE AIR RATIO	COOLING CAPACITY (KW)	SENSIBLE (SHR)	HEATING CAPACITY (KW)	COOLING EIR (KWH/KWH)	HEATING EIR (KWH/KWH)
5812.	2.094	1.1	0.	0.000	0.0	0.215	31.544	0.824	-26.359	0.24	0.20

ZONE NAME	SUPPLY FLOW (M3/H)	EXHAUST FLOW (M3/H)	FAN (KW)	MINIMUM FLOW RATIO	OUTSIDE AIR FLOW (M3/H)	COOLING CAPACITY (KW)	SENSIBLE (SHR)	EXTRACTION RATE (KW)	HEATING CAPACITY (KW)	ADDITION RATE (KW)	MULTIPLIER
BLDG	5812.	0.	0.000	1.000	1249.	0.00	0.00	20.46	0.00	-19.42	1.0

	COOLING						HEATING						ELEC	
MONTH	COOLING ENERGY (MWH)	TIME OF MAX DY	TIME OF MAX HR	DRY-BULB TEMP	WET-BULB TEMP	MAXIMUM COOLING LOAD (KW)	HEATING ENERGY (MWH)	TIME OF MAX DY	TIME OF MAX HR	DRY-BULB TEMP	WET-BULB TEMP	MAXIMUM HEATING LOAD (KW)	ELEC-TRICAL ENERGY (KWH)	MAXIMUM ELEC LOAD (KW)
JAN	0.00000					0.000	-11.322	12	3	-17.C	-18.C	-26.947	2815.	5.512
FEB	0.00000					0.000	-9.664	11	6	-15.C	-16.C	-26.645	2547.	5.512
MAR	0.00180	3	15	24.C	18.C	1.315	-7.189	24	5	-13.C	-13.C	-26.568	2846.	5.512
APR	0.18150	28	15	26.C	20.C	13.160	-2.995	9	6	-3.C	-4.C	-18.174	2782.	8.031
MAY	0.70550	21	13	31.C	24.C	26.022	-1.306	7	6	1.C	-2.C	-14.791	2951.	9.741
JUN	2.43235	20	18	33.C	26.C	30.732	-0.210	1	6	9.C	8.C	-6.697	3296.	12.874
JUL	7.23019	13	17	36.C	26.C	29.873	-0.002	6	6	16.C	13.C	-0.905	4518.	12.263
AUG	5.06050	26	17	34.C	24.C	25.500	-0.011	5	6	13.C	12.C	-3.272	3984.	11.588
SEP	1.06278	11	17	30.C	22.C	21.712	-0.825	23	6	2.C	1.C	-13.755	2953.	9.986
OCT	0.13723	30	19	23.C	19.C	12.433	-2.359	21	6	-1.C	-2.C	-16.761	2826.	8.221
NOV	0.04100	2	13	23.C	16.C	7.322	-6.103	14	10	-2.C	-2.C	-21.879	2717.	5.512
DEC	0.00000					0.000	-9.872	9	6	-10.C	-11.C	-24.862	2806.	5.512
TOTAL	16.853						-51.858						37041.	
MAX						30.732						-26.947		12.874

	-----COOLING-----				---HEATING---			DAY COOLING PEAK			
	JUN 20				JAN 12			JUL 3			
HOUR	HOURLY COOLING LOAD (KWH)	SENSIBLE HEAT RATIO	DRY-BULB TEMP	WET-BULB TEMP	HOURLY HEATING LOAD (KWH)	DRY-BULB TEMP	WET-BULB TEMP	HOURLY COOLING LOAD (KWH)	SENSIBLE HEAT RATIO	DRY-BULB TEMP	WET-BULB TEMP
1	0.645	0.478	20.C	18.C	-26.097	-15.C	-16.C	16.370	0.618	27.C	22.C
2	0.000	0.000	20.C	18.C	-26.627	-16.C	-17.C	12.341	0.635	27.C	22.C
3	0.000	0.000	19.C	17.C	-26.947	-17.C	-18.C	11.073	0.641	27.C	22.C
4	0.000	0.000	19.C	17.C	-26.941	-19.C	-19.C	9.871	0.646	26.C	21.C
5	0.000	0.000	18.C	17.C	-26.870	-20.C	-21.C	8.560	0.635	25.C	21.C
6	0.000	0.000	18.C	17.C	-26.789	-21.C	-21.C	6.622	0.568	26.C	21.C
7	0.000	0.000	19.C	18.C	-26.487	-21.C	-22.C	12.845	0.648	26.C	21.C
8	0.000	0.000	23.C	18.C	-26.622	-22.C	-22.C	15.546	0.658	28.C	22.C
9	4.007	0.600	24.C	19.C	-25.915	-22.C	-22.C	18.141	0.680	29.C	23.C
10	16.650	0.653	27.C	22.C	-25.567	-22.C	-22.C	20.362	0.688	31.C	23.C
11	20.851	0.679	28.C	22.C	-25.019	-20.C	-21.C	22.047	0.690	31.C	23.C
12	24.419	0.658	29.C	23.C	-21.282	-18.C	-18.C	25.813	0.687	32.C	24.C
13	24.883	0.672	29.C	23.C	-18.043	-16.C	-17.C	25.018	0.706	32.C	24.C
14	27.371	0.679	31.C	24.C	-17.257	-14.C	-16.C	25.308	0.722	33.C	24.C
15	30.433	0.652	32.C	25.C	-17.326	-16.C	-17.C	24.669	0.753	33.C	23.C
16	30.256	0.633	32.C	26.C	-18.733	-16.C	-17.C	26.128	0.728	33.C	23.C
17	30.732	0.637	33.C	26.C	-21.568	-17.C	-18.C	26.172	0.732	33.C	23.C
18	28.659	0.647	32.C	25.C	-24.240	-19.C	-19.C	26.426	0.727	33.C	23.C
19	26.365	0.613	32.C	26.C	-23.417	-20.C	-21.C	24.680	0.730	32.C	22.C
20	20.381	0.594	26.C	23.C	-25.397	-20.C	-21.C	23.338	0.714	31.C	22.C
21	13.235	0.632	21.C	19.C	-25.081	-19.C	-20.C	21.807	0.711	29.C	21.C
22	11.925	0.601	21.C	19.C	-24.355	-19.C	-20.C	21.458	0.709	29.C	21.C
23	5.685	0.538	21.C	18.C	-24.360	-19.C	-19.C	16.944	0.728	27.C	20.C
24	3.999	0.579	22.C	18.C	-24.795	-18.C	-19.C	14.055	0.678	24.C	20.C
SUM								455.592			
MAX	30.732				-26.947						

SYSTEM-TYPE	PSZ	SQFT/TON	247.2
COOLING PEAK	153.04 (WATT /M2)	HEATING PEAK	-134.20 (WATT /M2)
SUPPLY AIR PEAK FLOW	28.95 (M3/H-M2)	MIN-OA/PERSON	26.01 (M3/H)
OA FRAC AT CLG PEAK	0.215	OA FRAC AT HTG PEAK	0.215

* ASTERISKS INDICATE HOURS LOADS NOT MET

TOTAL HOURS AT TEMPERATURE LEVEL AND TIME OF DAY

HOUR	1AM	2	3	4	5	6	7	8	9	10	11	12	1PM	2	3	4	5	6	7	8	9	10	11	12	TOTAL
ABOVE 29.4	0	0	0	0	0	0	0	0	0	0	0	0	0	0	0	0	0	0	0	0	0	0	0	0	0
26.7-29.4	0	0	0	0	0	0	0	0	0	0	0	0	0	0	0	0	0	0	0	0	0	0	0	0	0
23.9-26.7	85	53	40	37	32	42	46	63	92	110	130	156	168	170	170	171	167	168	159	148	139	133	127	99	2705
21.1-23.9	277	276	258	261	266	254	252	236	241	247	231	207	197	195	195	194	198	197	206	216	225	231	237	265	5562
18.3-21.1	3	2	5	5	5	7	5	4	4	7	3	2	0	0	0	0	0	0	0	1	1	1	1	1	57
15.6-18.3	0	0	0	0	0	0	0	0	0	1	1	0	0	0	0	0	0	0	0	0	0	0	0	0	2
BELOW 15.6	0	0	0	0	0	0	0	0	0	0	0	0	0	0	0	0	0	0	0	0	0	0	0	0	0

MMDDHH	GLOBAL	WIN-1	GLOBAL	BLDG	BLDG	BLDG
	GLOBAL SOLAR WATT /M2	SOL GAIN GLAS+FRM WATT	DRY BULB TEMP C	ZONE TEMP C	THERMOST SETPOINT C	EXTRACTN RATE WATT
	----(15)	----(15)	----(8)	----(6)	----(7)	----(8)
1 5 1	0.0	0.0	-14.4	21.8	22.2	-9868.
1 5 2	0.0	0.0	-13.9	21.8	22.2	-10493.
1 5 3	0.0	0.0	-13.9	21.7	22.2	-12186.
1 5 4	0.0	0.0	-13.9	21.7	22.2	-13109.
1 5 5	0.0	0.0	-13.3	21.7	22.2	-12773.
1 5 6	0.0	0.0	-12.8	21.7	22.2	-12976.
1 5 7	0.0	0.0	-12.2	21.8	22.2	-11357.
1 5 8	2.8	17.0	-11.7	21.7	22.2	-11864.
1 5 9	45.8	458.9	-10.6	21.8	22.2	-11959.
1 510	99.6	1157.2	-10.0	21.8	22.2	-10977.
1 511	139.3	1668.4	-8.3	21.9	22.2	-10669.
1 512	159.5	1946.1	-7.8	21.9	22.2	-9838.
1 513	203.5	2786.4	-7.2	22.0	22.2	-8739.
1 514	175.1	2359.9	-7.2	22.0	22.2	-9040.
1 515	121.9	1558.3	-7.2	22.0	22.2	-9088.
1 516	51.6	557.5	-6.7	22.0	22.2	-9649.
1 517	2.6	116.8	-6.7	22.0	22.2	-9363.
1 518	0.0	0.0	-7.2	22.0	22.2	-9656.
1 519	0.0	0.0	-7.8	22.0	22.2	-9284.
1 520	0.0	0.0	-9.4	21.9	22.2	-9954.
1 521	0.0	0.0	-10.0	21.9	22.2	-9030.
1 522	0.0	0.0	-10.0	22.0	22.2	-8233.
1 523	0.0	0.0	-10.0	22.0	22.2	-8290.
1 524	0.0	0.0	-9.4	22.0	22.2	-8699.
DAILY SUMMARY (JAN 5)						
MN	0.0	0.0	-14.4	21.7	22.2	-13109.
MX	203.5	2786.4	-6.7	22.0	22.2	-8233.
SM	1001.7	12626.6	167.2	933.7	941.7	-247094.
AV	41.7	526.1	-10.1	21.9	22.2	-10296.
MONTHLY SUMMARY (JAN)						
MN	0.0	0.0	-14.4	21.7	22.2	-13109.
MX	203.5	2786.4	-6.7	22.0	22.2	-8233.
SM	1001.7	12626.6	167.2	933.7	941.7	-247094.
AV	41.7	526.1	-10.1	21.9	22.2	-10296.
YEARLY SUMMARY						
MN	0.0	0.0	-14.4	21.7	22.2	-13109.
MX	203.5	2786.4	-6.7	22.0	22.2	-8233.
SM	1001.7	12626.6	167.2	933.7	941.7	-247094.
AV	41.7	526.1	-10.1	21.9	22.2	-10296.

EQUIPMENT	SIZE (MWATT)	NUMBER INSTD	NUMBER AVAIL	SIZE (MWATT)	NUMBER INSTD	NUMBER AVAIL	SIZE (MWATT)	NUMBER INSTD	NUMBER AVAIL	SIZE (MWATT)	NUMBER INSTD	NUMBER AVAIL	SIZE (MWATT)	NUMBER INSTD	NUMBER AVAIL	SIZE (MWATT)	NUMBER INSTD	NUMBER AVAIL
DHW-HEATER	0.009	1	1															

ENERGY TYPE:	ELECTRICITY	NATURAL-GAS
UNITS: MWH		
CATEGORY OF USE		
AREA LIGHTS	10.5	0.0
MISC EQUIPMT	4.9	0.0
SPACE HEAT	0.0	76.9
SPACE COOL	4.0	0.0
HEAT REJECT	4.1	0.0
PUMPS & MISC	1.8	0.0
VENT FANS	17.4	0.0
DOMHOT WATER	0.0	28.3
TOTAL	42.7	105.2

TOTAL SITE ENERGY	147.90	MWH	736.5 KWH/M2-YR	GROSS-AREA	736.5 KWH/M2-YR	NET-AREA
TOTAL SOURCE ENERGY	233.38	MWH	1162.2 KWH/M2-YR	GROSS-AREA	1162.2 KWH/M2-YR	NET-AREA

PERCENT OF HOURS ANY SYSTEM ZONE OUTSIDE OF THROTTLING RANGE = 0.7
PERCENT OF HOURS ANY PLANT LOAD NOT SATISFIED = 0.0

NOTE: ENERGY IS APPORTIONED HOURLY TO ALL END-USE CATEGORIES.

ENERGY TYPE: SITE UNITS:	ELECTRICITY KWH	NATURAL-GAS M3
CATEGORY OF USE		
AREA LIGHTS	10463.	0.
MISC EQUIPMT	4938.	0.
SPACE HEAT	0.	24162.
SPACE COOL	3991.	0.
HEAT REJECT	4137.	0.
PUMPS & MISC	1772.	0.
VENT FANS	17432.	0.
DOMHOT WATER	0.	8889.
TOTAL	42733.	33051.

TOTAL ELECTRICITY	42733. KWH	1.838 KWH	/ M2 -YR GROSS-AREA	1.838 KWH	/ M2 -YR NET-AREA
TOTAL NATURAL-GAS	33051. M3	1.421 M3	/ M2 -YR GROSS-AREA	1.421 M3	/ M2 -YR NET-AREA

PERCENT OF HOURS ANY SYSTEM ZONE OUTSIDE OF THROTTLING RANGE = 0.7
PERCENT OF HOURS ANY PLANT LOAD NOT SATISFIED = 0.0

NOTE: ENERGY IS APPORTIONED HOURLY TO ALL END-USE CATEGORIES.

METRIC INPUT/OUTPUT EXAMPLE SMALL BAR/LOUNGE DOE-2.1E-001 Thu Nov 11 11:30:36 1993EDL RUN 1
SYSTEM 4: PKG PSZ WATER-COOLED UNIT WITH WATER-SIDE ECONOMIZER
REPORT- ES-D ENERGY COST SUMMARY

UTILITY-RATE	RESOURCE	METERS	METERED ENERGY UNITS/YR	TOTAL CHARGE ($)	VIRTUAL RATE ($/UNIT)	RATE USED ALL YEAR?
ELEC-COST	ELECTRICITY	1 2 3 4 5	42732. KWH	3386.	0.0792	YES
GAS-COST	NATURAL-GAS	1 2 3 4 5	33051. M3	5997.	0.1815	YES
				==========		
				9384.		

ENERGY COST/GROSS BLDG AREA: 4.34
ENERGY COST/NET BLDG AREA: 4.34

METRIC INPUT/OUTPUT EXAMPLE SMALL BAR/LOUNGE DOE-2.1E-001 Thu Nov 11 11:30:36 1993EDL RUN 1
SYSTEM 4: PKG PSZ WATER-COOLED UNIT WITH WATER-SIDE ECONOMIZER
REPORT- ES-E SUMMARY OF UTILITY-RATE: ELEC-COST

UTILITY-RATE: ELEC-COST
RESOURCE: ELECTRICITY
METERS: 1 2 3 4 5
POWER-FACTOR: 0.80
DEMAND-WINDOW: HOUR
BILLING-DAY: 31
EXCESS-KVAR-FRAC: 0.30
3413. BTU/KWH
RATE-LIMITATION: 0.0000
EXCESS-KVAR-CHG: 0.0000

RATE-QUALIFICATIONS

MIN-ENERGY:	0.0
MAX-ENERGY:	0.0
MIN-DEMAND:	0.0
MAX-DEMAND:	0.0
QUALIFY-RATE:	ALL-MONTHS
USE-MIN-QUAL:	NO

BLOCK-CHARGES
E-SM
E-WN

DEMAND-RATCHETS

MIN-MON-RATCHETS

MONTH	METERED ENERGY KWH	BILLING ENERGY KWH	METERED DEMAND KW	BILLING DEMAND KW	ENERGY CHARGE ($)	DEMAND CHARGE ($)	ENERGY CST ADJ ($)	TAXES ($)	SURCHRG ($)	FIXED CHARGE ($)	MINIMUM CHARGE ($)	VIRTUAL RATE ($/UNIT)	TOTAL CHARGE ($)
JAN	3181	3181	6.1	6.1	217	5	0	0	0	22	0	0.0765	243
FEB	2875	2875	6.1	6.1	201	5	0	0	0	22	0	0.0791	228
MAR	3243	3243	6.2	6.2	220	5	0	0	0	22	0	0.0761	247
APR	3237	3237	8.7	8.7	228	7	0	0	0	22	0	0.0793	257
MAY	3467	3467	10.7	10.7	260	9	0	0	0	22	0	0.0836	290
JUN	3886	3886	13.9	13.9	294	11	0	0	0	22	0	0.0842	327
JUL	5156	5156	13.2	13.2	357	11	0	0	0	22	0	0.0754	389
AUG	4611	4611	12.5	12.5	326	10	0	0	0	22	0	0.0775	357
SEP	3477	3477	10.8	10.8	261	9	0	0	0	22	0	0.0837	291
OCT	3306	3306	8.9	8.9	244	7	0	0	0	22	0	0.0826	273
NOV	3118	3118	6.4	6.4	214	5	0	0	0	22	0	0.0774	241
DEC	3174	3174	6.0	6.0	216	5	0	0	0	22	0	0.0765	243
TOTAL	42732	42732	13.9		3037	89	0	0	0	261		0.0792	3386

METRIC INPUT/OUTPUT EXAMPLE SMALL BAR/LOUNGE DOE-2.1E-001 Thu Nov 11 11:30:36 1993EDL RUN 1
SYSTEM 4: PKG PSZ WATER-COOLED UNIT WITH WATER-SIDE ECONOMIZER
REPORT- ES-E SUMMARY OF UTILITY-RATE: GAS-COST

UTILITY-RATE: GAS-COST
RESOURCE: NATURAL-GAS
METERS: 1 2 3 4 5
DEMAND-WINDOW: HOUR
BILLING-DAY: 31
10860. BTU/M3
RATE-LIMITATION: 0.0000

RATE-QUALIFICATIONS

MIN-ENERGY:	0.0
MAX-ENERGY:	0.0
MIN-DEMAND:	0.0
MAX-DEMAND:	0.0
QUALIFY-RATE:	ALL-MONTHS
USE-MIN-QUAL:	NO

BLOCK-CHARGES
GAS-CH

DEMAND-RATCHETS

MIN-MON-RATCHETS

MONTH	METERED ENERGY M3	BILLING ENERGY M3	METERED DEMAND M3/HR	BILLING DEMAND M3/HR	ENERGY CHARGE ($)	DEMAND CHARGE ($)	ENERGY CST ADJ ($)	TAXES ($)	SURCHRG ($)	FIXED CHARGE ($)	MINIMUM CHARGE ($)	VIRTUAL RATE ($/UNIT)	TOTAL CHARGE ($)
JAN	5875	5875	13.3	13.3	965	0	0	0	0	11	0	0.1661	976
FEB	5110	5110	12.2	12.2	850	0	0	0	0	11	0	0.1685	861
MAR	4202	4202	11.8	11.8	714	0	0	0	0	11	0	0.1725	725
APR	2261	2261	8.3	8.3	423	0	0	0	0	11	0	0.1919	434
MAY	1453	1453	6.9	6.9	302	0	0	0	0	11	0	0.2152	313
JUN	861	861	3.5	3.5	189	0	0	0	0	11	0	0.2325	200
JUL	725	725	2.2	2.2	159	0	0	0	0	11	0	0.2348	170
AUG	716	716	2.2	2.2	157	0	0	0	0	11	0	0.2350	168
SEP	1110	1110	6.5	6.5	244	0	0	0	0	11	0	0.2297	255
OCT	1881	1881	7.8	7.8	366	0	0	0	0	11	0	0.2004	377
NOV	3577	3577	10.4	10.4	621	0	0	0	0	11	0	0.1765	631
DEC	5281	5281	11.1	11.1	876	0	0	0	0	11	0	0.1679	887
TOTAL	33051	33051	13.3		5868	0	0	0	0	129		0.1815	5997