Glass Manufacturing Industry Council

Glass Melting Technology:

A Technical and Economic Assessment

A Project of the Glass Manufacturing Industry Council

Under Contract # DE-FC36-021D14315 to:

U.S. Department of Energy
Industrial Technologies Program

October 2004

Glass Melting Technology:

A Technical and Economic Assessment

Principal Investigators

C. Philip Ross
Glass Industry Consulting International

Gabe L. Tincher
N. Sight Partners

Editor
Margaret Rasmussen
Paul Vickers Gardner Glass Center

A Project of the Glass Manufacturing Industry Council
Under contract #DE-FC36-021D14315 to the U.S. Department of Energy–Industrial Technologies Program (formerly Office of Industrial Technologies)

October 2004

Disclaimer

This document was prepared by representatives of the Glass Manufacturing Industry Council under contract to the U.S. Department of Energy. Neither the United States Government nor any agency thereof, nor the Glass Manufacturing Industry Council, nor any of their employees, makes **any warranty, expressed or implied, or assumes any legal liability or responsibility for the accuracy, completeness, or usefulness of any information, apparatus, product, or process disclosed, or represents that its use would not infringe privately owned rights**. Reference herein to any specific commercial product, process, or service by trade name, trademark, manufacturer, or otherwise does not necessarily constitute or imply its endorsement, recommendation, or favoring by the United States Government or any agency thereof, or the Glass Manufacturing Industry Council. The views and opinions of authors expressed herein do not necessarily state or reflect those of the United States Government or any agency thereof.

Glass Melting Technology: A Technical and Economic Assessment published by the Glass Manufacturing Industry Council with the US Department of Energy-Office of Industrial Technologies. Contract #DE-FC36-02D14315. August 2004.

Copyright © 2004 by Glass Manufacturing Industry Council.
c/o ACerS, P.O. Box 6136, Street Address: 735 Ceramic Pl, Zip: 43081,
Westerville, OH 43086-6136.
ISBN 0-9761283-0-6

Printed in the United States of America

Editor's Acknowledgement

Only those who have dedicated their lives to glass research and manufacturing could have created this document that provides so much fundamental understanding of glass melting technology as well as captures the realities of the critical economic status of the glass industry in the United States. Members of the glass community from throughout the United States have willingly contributed their expertise, energy, time and patience with the editor to make this important document available for glass researchers and manufacturers of today and tomorrow.

For their cooperativeness, extraordinary kindness and moral support, the editor extends a special thanks to the authors: C. Philip Ross and Gabe Tincher as well as L. David Pye of the New York State College of Ceramics at Alfred University, William Prindle, glass industry consultant, Elliott Levine of the Department of Energy, Keith Jamison of Energetics, Michael Greenman of GMIC, John Brown of GMIC, and Warren Wolf, president-elect of the American Ceramic Society.

Special thanks for his exceptional work goes to Frederic Quan of Corning Incorporated for his review and contributions to the economic assessment section.

And many others provided data and knowledge throughout the editorial process: Frank Woolley, Corning Incorporated (ret.); Philip Sanger, Cleveland State University; Ron Gonterman, Plasmelt; Peter Krause, Siemens; David Rue, Gas Technology Institute.

The principal investigators C. Philip Ross and Gabe Tincher performed an enormous service to the US glass industry in their diligent research and compilation of the information in this document. The editor was privileged to work with them to prepare this important work for publication.

Margaret Rasmussen
Editor

Glass Melting Technology:
A Technical and Economic Assessment

Executive Summary

Basic understanding of melting technology and knowledge of industry economics is essential if the glass manufacturing process is to be advanced to conserve energy, protect environmental quality, and secure capital investment. This study unravels the complexities of the glassmaking process in all segments of the industry. Glass manufacturers, managers and administrators, scientists and engineers, and policy makers will find this report a ready reference for further study. Government agencies will understand how best to support glass manufacturing and apply appropriate regulations to the industry. Materials and equipment vendors can identify present and future needs to better serve glass manufactures. Educators and students in higher education can profit from past research and development to design pre-proprietary research. Collectively, these groups will be equipped to mold a more viable future for the US glass industry that employs over 148,000 workers and produces 20 percent of the 100 million tons of glass produced worldwide.

Current glass melting technology, based on continuous furnace design initially developed in the mid 19th century by the Siemens Brothers in Germany, has evolved in response to manufacturing requirements. But few revolutionary changes to this basic technology have occurred because such changes involve considerable financial and technical risks that no single glass corporation can reasonably undertake. Development of melting techniques is also hampered by the industry's peculiar characteristic of being segmented into the sectors of container, flat, fiber and specialty glasses, with those segments further divided within themselves. Reaching consensus on melting technology is difficult, but a cooperative research and development effort by all glass manufacturers, with government support of funding and practical regulatory standards, could result in a glass melting technology that would answer the major challenges posed by energy usage, environmental regulations and costly capital investment.

The industry experienced a noticeable overall compound annual growth rate (+0.8 percent) between 1997 and 2001. However, growth has slowed in the past several years and has suffered from general decline in the US economy. Plant over-capacity, increasing foreign trade and imports, capital intensiveness, rising costs for environmental compliance, increasing international competition, and substitution by aluminum and plastics have also challenged the US glass industry. Most manufacturers expect a short (one-to- two–year) payback for capital investments in established businesses, resulting in smaller evolutionary steps to improve the melting process. New manufacturing facilities have difficulty attracting capital investment because glassmaking is a capital intensive process and because rate of return on investment is low. Established glass businesses struggle to earn consistent rates of return on corporate cost of capital and have little financial flexibility to promote research and development.

A national and international survey of over 75 glassmaking corporations and academic research institutions, an extensive analysis of technical literature published and patents

awarded, and a forum convened to tap hundreds of years of experience and knowledge of expert glass industry scientists and engineers provided the data for this document. As an industry reference, "Glass Melting Technology: A Technical and Economic Assessment" should enhance the viability of the glass industry in the nation's economy by creating a broad based understanding of glass melting technology research and development; economic challenges and potential; current glass melting practice; past innovations with potential for future development; the perspective of experienced glass manufacturers; and activity in cutting edge melting research. To expand this document's value, appendices include a primer on the glass fusion process; review of technical literature and patents; and an analysis of automation systems and instrumentation to improve the melting process.

Technology Assessment

The technical dimensions of the current glass melting process must be addressed if the industry is to meet the increasing demands of the 21st century. Development for all four segments of the industry will be affected by the following factors: higher quality requirements; stricter environmental regulations; cost and availability of fuel; capital intensity; capital productivity; improved flexibility of operation; reduced product costs; development of new glass compositions; improved worker ergonomics; and better methods to recycle waste glass. Competition from other materials and imported glass products intensifies the need for advanced melting technology.

Development of a new glass melting process will not be easy. Energy efficiency of the glass melting process is approaching practical limits. Further environmental regulations and glassmaking technology must be compatible. The four glassmaking segments must identify common areas for improvement, pool their resources, and share the risks. Profitability must be improved to allow appropriate funding for research and to provide capital investment opportunities.

Under the auspices of the US DOE Office of Industrial Technologies and the Glass Manufacturing Industry Council (GMIC), research efforts are already underway to enhance the viability of this important US industry. Among the research projects funded are Submerged Combustion Melting (Next Generation Melting System/NGMS); Segmented Melting System; High-Intensity Plasma Glass Melter; and Advanced Oxy-Fuel Fired Front End Melting. Members of the GMIC are making a concerted cooperative effort to advance glass-melting technology.

Economic Assessment

Despite economic challenges, most segments of the multi-billion dollar glass industry have maintained reasonable operating margins and have generated positive cash flow. Container glass, although threatened by substitution of plastics and aluminum, has experienced an upsurge in the past few years due to increased use for alcoholic beverages. Flat glass has fluctuated with the economy, yet sales have remained positive over the past 25 years. Fiberglass insulation has slowed slightly in recent years but is expected to surge with new construction due to lower interest rates and with concern for energy consumption. Fiberglass textiles and reinforcements sales have also reflected a

cyclical economy. Specialty glass maintains the largest sales of any segment from its diverse and large group of sub-segments.

A critical component of the nation's economy, the glass industry must continue to develop those technical innovations that reduce cost of material, overhead and operating costs; conserve energy; and comply with environmental regulations. As cost savings throughout the entire manufacturing operation are realized, the glass industry will become more attractive to capital investment. The fragmentation into four major segments with sub-segments hampers standardization, discouraging collaboration that would allow economies of scale and increase bargaining power. The segments of the industry have been reluctant to collaborate for practical reasons. They produce different glass types, require furnaces of different size and scale, and have a long history of competitiveness and anti-trust concerns. Collaboration has been stimulated recently by the launching of the Next Generation Melting System under the auspices of the GMIC and the DOE/OIT.

When the industry develops a common view of what forces will stimulate the economy, glassmakers can proceed to cooperate on the highest priority challenges. Efforts to improve glass melting technology have recently focused on separating the stages of the melting process rather than employing one single large melter for batch, melting and refining. Development of a step-change process of innovative technology with the risks and costs shared for research and development of pre-competitive melting concepts could improve capital productivity and attractiveness for capital investment.

Collaboration across the industry is essential if the industry of the year 2020 is to meet the goals of the "Roadmap for the Future"—production costs 20 percent below the 1995 levels; process energy use by 50 percent toward theoretical energy requirements; air and water emissions 20 percent below 1995 levels.

Current Practice

For most commercial glasses, large-scale, continuous furnaces are currently used for melting, refining, and homogenization of soda-lime, borosilicate, lead crystal and crystal glasses. The conventional method of providing heat to melt glass is to burn fossil fuel above a batch of continuously fed material and draw molten glass continuously from the furnace. Three categories of melting—particle, blanket or pile melting—are used depending on the capacity needed, the glass formulation, fuel prices, the existing infrastructure, and environmental performance. The glass melting process is energy intensive. 50 percent of the US glass industry uses fossil fuel in recuperative furnaces. Oxy-fuel firing has been adopted by 25 percent of US glass manufacturers because fossil fuel furnaces can be converted to oxy-fuel with relatively low risk.

Innovations in Glass Melting Technology

Numerous innovations in melting technologies have been developed over the past 30 years in response to high capital costs for building facilities; limited flexibility of operation; high costs of fuel; and environmental regulations. Innovative technologies have met with various degrees of success. Commercialization has been hampered by lack

of funding for development; inadequate material for construction; problems from scale up; unreliability of the technology; limitations of the glass compositions that could be processed; environmental failure; safety issues; high net cost; lack of process control; or production of poor quality glass.

Technical innovations explored, but not developed over the past three decades, deserve further consideration with the advancements in refractory materials; instrumentation and computer modeling; state-of-the-art equipment; new fining technologies; and fuel replacements. Previous technology will be reviewed for pursuit in the future because of the necessity to comply with clean air laws; to recycle glass industry waste and used glass products; and to provide electric melting for longer furnace life and to improve quality of glass products.

Expert Perspective

In one important aspect of this study—the industry forum, glass melting experts pooled hundreds of years of knowledge and experience and concluded, "The glassmaking process is ripe for drastic change."

• Any solutions to save energy, comply with environmental regulations, secure capital investment must be cost effective and practical for glass manufacturing.
• To remain vigorous and competitive, the glass industry must mount major research efforts and develop innovative technology.
• The most promising long-range directions for research are forced convection melters; melter designs for faster glass composition changes; sub-atmospheric pressure fining to eliminate chemical fining agents; refractories to allow higher melting temperatures; thermodynamic modeling of melting for which properties of glassmaking materials can be measured and analyzed.
• All segments of the industry must collaborate to pool technical knowledge, share cost, and distribute risks.

Vision for the Future

The conservative, risk-averting glass industry has waited far too long to confront the challenges and establish a strategy for survival, according to this study. Immediate action must be taken to identify and solve problems that affect the industry as a whole. The areas of critical concern across the industry are for expanding research and development; enhancing batch and cullet preheating; developing accelerated shear dissolution in fusion; and reducing fining time. Under a new business model concept, conceived as Glass Inc., the industry could cooperate to benefit from economies of scale for purchasing raw materials, obtaining energy sources and capital equipment, and constructing and rebuilding facilities.

In the future, the glass industry must be prepared to respond to an uncertain environment with increased innovation in research and development. Members of the industry must collectively identify and solve common problems for the industry as a whole. All segments of the industry, working collaboratively, can secure the glass industry as a vital entity in the economy of the United States.

Reference
The report is supplemented with a full reference appendix. A primer for glass fusion provides a basic understanding of the glass melting process. Automation systems and instrumentation devices for glassmaking are specified and promise to improve the economics of the US glass industry. Research projects in process are detailed for review. Relevant glass science and engineering literature and patents awarded by the US government, along with an extensive bibliography, are compiled to provide a major reference tool for glass manufacturing administrators and operators, educators, scientific researchers, government agents, and materials and equipment suppliers.

Acknowledgements
This technical and economic study has been funded by the US DOE Office of Industrial Technologies and conducted under the auspices of the Glass Manufacturing Industries Council. Glass industry managers, scientists, engineers have contributed time, energy and expertise to provide data and to review the document for accuracy and completeness.

CONTENTS

Executive Summary v
Preface xiii
Introduction 1

Section One
Technical and Economic Assessment Report

I. Technical Assessment of Glass Melting 9

II. Economic Assessment of US Glass Manufacturing 27

III. Traditional Glass Melting 49

IV. Innovations in Glass Technology 59

V. Industry Perspective on Melting Technology 89

VI. Vision for Glassmaking 101

Section Two
Applied Glass Technology

Introduction 109
1. Primer for Glassmaking 111

2. Automation and Instrumentation for Glass Manufacturing 137

3. Developments in Glass Melting Technology 149
Submerged Combustion Melting: 150
(Next Generation Melting System (NGMS)
High-Intensity Plasma Glass Melter 161
Advanced Oxy-Fuel Fired Front End 173
Segmented Melting System 175

Appendices
A. Literature and Patent Review—Glass Technology 180
1. Categorization of Literature
2. Categorization of Patents
B. Glossary 239
C. Contributors and Sponsors 245
D. Technology Resource Directory 249

Bibliography 251

Figures and Tables 269

Index 271

Preface

The glass industry is undergoing dramatic changes today in the United States. Historically, the glass industry has had no well-established organization to support it in research and defend its viability, as other industries have had. Rather, each glass of the four major glass industry segments—container, flat, fiber or specialty glass—has focused its energies on marketing and lobbying for its own sector. Efforts to advance glassmaking technology overall have been limited to several broad industry groups that met only infrequently to exchange ideas. But partially as a result of discussions and initiatives generated by this Technical and Economic Assessment (TEA) (during its editing and review stage), glassmakers are seeking ways in which to advance glass technology.

As findings of this research project indicate, the design of conventional furnaces has been nearly optimized, leaving little room for further improvements. So to design a "dream" furnace that needs no refractories, that requires no rebuilds, that can be shut down or started up in four hours, that creates no pollution, that has no surface combustion, and in which electricity is optional, glassmakers must move with diligence and discipline to the task of designing the glass furnace of the future.

For the most part, US glass companies have divested themselves of research activity other than their involvement in activities that foster productivity and profit. Such an economic environment has not been conducive to coordinated technical improvements or developments. Manufacturers generally hire outside experts on furnace design, engineering and construction in glass manufacturing and rely on suppliers for refractory research and development and supply. Funding for research remains a very low 1 to 1.5 percent of sales industry wide.

But when in the mid 1990s the US Department of Energy (DOE) identified the glass industry as one of the "Industries of the Future" (IOF)—nine primary energy-intensive industries—to assist in improving the energy efficiency of these industries' operations, the glass industry began to look forward. The DOE helped bring the glass industry experts together to develop a "National Vision Document and Technical Roadmap." In supporting the creation of the Glass Manufacturing Industry Council (GMIC), the DOE encouraged links to national laboratories to revitalize glass research. To ensure that research is relevant to glass makers and the broader industry, the DOE has required a substantial additional cost share from industry partners.

As GMIC members began to consider the overall direction of the glass industry, they initiated a process that is attempting to understand why various segments of the glass industry adopted certain melting technologies and to identify the drivers that motivate the industry to adopt new technology. To gain this understanding, the larger segments of the industry, which produce 90 percent of the glass in the US, were studied. The GMIC, in cooperation with the Department of Energy has conducted this study, "Advancing Glass Melting Technologies: A Technical and Economic Assessment," to explore advanced technologies for commercial glass melting.

To compile this technical assessment of US glass melting, principal investigators C. Philip Ross and Gabe Tincher tapped a number of resources. Extensive interviews were conducted with glass melting experts in the United States and Europe. Consultations in over 75 companies and institutions provided information relevant to glass melting technology. They conducted an exhaustive search of glass patent and research literature; the results were studied and categorized to determine technical concepts, ideas or processes. A high-level workshop of expert glass scientists, engineers and administrators was convened. To ensure accurate reflection of the technical and economic status of the US glass industry, the perspective of glass manufacturing authorities from throughout the industry was solicited: Warren Wolf, Owens-Corning (ret.), L. David Pye, dean and professor of glass science, emeritus, New York State College of Ceramics at Alfred University; John T. Brown, Corning Inc. (ret.), GMIC technical director; Frank Woolley, Corning Inc. (ret.); Frederic Quan, Corning Incorporated; and many others.

When in 2002 DOE adopted a policy to encourage "Grand Challenges"—projects of a wider scope that involve higher risk that, if successful, would lead to "step changes" rather than incremental, evolutionary changes—GMIC members began to think larger and voted to submit a project that would meet the DOE requirement. A team of committed companies developed a credible project description. Each of eight glass companies pledged $50,000 cash and $1.5 million in kind over a three-year period. In an unprecedented step, each member agreed to contribute appropriate intellectual property, know-how and patents to benefit the project. A proposal was compiled for the Next Generation Glass Melting System that met the Grand Challenges criteria for funding with a "submerged combustion melter" concept. This technology holds promise to improve yields and the life of the furnace.

As a foundation for undertaking challenges, high-risk projects that could greatly impact the glass industry, the GMIC, with support from the US Department of Energy, undertook this extensive study of all technical and economic aspects of the current practice of glassmaking. This report is designed to supplement the knowledge of experienced glass manufacturers, provide fundamental knowledge for the less experienced glass scientist, engineer or manufacturer, and serve as a reference for all scientists, engineers, educators, administrators, managers, policy makers, and operators who are dedicated to preserving and enhancing the viability of glass manufacturing in the United States.

Within the covers of this document, you will find an up-to-date account of the status of the glass melting technology; the economic challenges to and stimulants for glass manufacturing; current glass melting practice; technical innovations over the past quarter of a century that might inspire advanced technology if revisited; industry personnel's recommendations for advancing glass manufacturing; and a vision for the future based on the collective knowledge obtained from this exhaustive study.

Of particular importance, the chapter on the automation and instrumentation of glassmaking in Section II provides guidance for developing processes for glassmaking that will provide savings in human power, energy usage, and environmental emissions.

While this section was not a major component of the TEA study on glass melting technology, it was appended because of its tremendous potential of automating the glassmaking process. Investment in process control technology could improve yields and extend life of the furnace. Glass furnaces might be regulated and controlled far better by sensor feedback and automated control than by human observers. Emerging advanced controls in place in Europe are adjusting operating targets of aging furnaces and changing conditions on a moment-to-moment basis, as pull or cullet ratios or product quality requirements change. The benefits of better operations and reduced labor costs should accrue from pursuing the examples as cited in Appendix B "Automation and Instrumentation for Glass Manufacturing."

This document outlines the major technical and economic challenges that face the US glass industry and provides substantial data to suggest how these challenges might be met to fortify glass manufacturing by addressing broad industry concerns as well as concerns that face individual industry segments. "Glass Melting Technology: A Technical and Economic Assessment" telescopes into the future of glassmaking, eliminating the need for guesswork and risk-taking and provides a major reference for glass scientists, engineers and managers to foster the vitality of one of our nation's most long standing and important industries.

Michael Greenman
Executive Director
Glass Manufacturing Industry Council

Introduction

The goal of the project, "Glass Melting Technology: A Technical and Economic Assessment," is to create a common base of knowledge on which future technology might be developed for one of the nation's most important industries. The objectives of this study were to better understand the issues that face the US glass industry, particularly with regard to current melting technologies; to identify the factors that will motivate the industry to adopt new technology for commercial glass melting; and to analyze the barriers that have stifled technical innovation and change.

One of the major barriers to finding common goals to advance glass melting technology has been the division of the glass industry into four major segments, each with its own requirements, products, and processing methods. To obtain a broad vision of the total industry, the study focused on the larger segments of the glass industry that represent more than 90 percent of all container, flat, textile and insulation fiber, and the major segments of specialty glass, i.e., lighting, TV and tableware.

This report represents the collective efforts of glass scientists, engineers and manufacturers, organizations, academic institutions, technical librarians and automation specialists. Experienced glass engineers, scientists and manufacturers gave willingly of their time and experience to help the authors assess the challenges that face the glass industry as a whole. Personnel and institutions throughout the United States, Europe and Asia generously provided information vital to this study. Professional technical librarians and research scientists conducted exhaustive literature and patent searches that resulted in over 500 technical articles and over 300 patents that been categorized and evaluated, making this an invaluable reference tool. The experimental work of glass scientists and engineers provided a record of the innovations in glass-melting technological innovations that have been developed but, for economic and technical reasons, not implemented over the last quarter of the past century.

Today, the US glass industry faces serious economic and technological challenges in three areas that must be addressed. a) Energy consumption must be further reduced, as its future availability, cost and effectiveness are uncertain. A melting system that addresses this issue must be developed. b) Environmental regulations for gaseous and particulate emissions are expected to become more restrictive, and glass manufacturers must be prepared to comply. c) Capital investment for operations and plant facilities is extraordinary, and glass manufacturers must become more attractive if the glass industry is to remain viable. Under these constraints, glass manufacturers must enhance productivity to stay abreast of market demands. To meet these challenges, experienced glass manufacturers agree that the industry must change dramatically.

This review of glass melting practices in the United States has been based on the technical roadmap, which was developed in consultation with GMIC-member industry glass engineers and scientists under sponsorship of the US DOE–Office of Industrial Technologies (DOE-OIT). Aggressive and challenging—but realistic—goals are defined to improve glass manufacturing by the year 2020.

Glass Industry Perspective

The consensus of glass industry scientists, engineers and manufacturers on the status of glass melting technology and its role in manufacturing economics can be distilled into eight major concerns:

1. Capital and operating costs for melting must be justified by the quality required to be competitive in the marketplace.
2. Energy savings are driven only by net cost savings.
3. Higher operating costs may be acceptable if higher capital productivity can be realized.
4. The technical and economic horizon of the glass industry is short term.

5. All traditional glass segments are averse to both technical and economic risks.
6. Perceived differences—particularly environmental issues—between segments for melting concerns limit collaboration within the total industry.
7. Interest in collaboration in a large-scale melting initiative is dependent on a change in the key incentives.
8. A clear view of future energy, capital and environmental costs could provide the necessary drivers to change melting practices, encourage melting development, and catalyze collaboration.

Technology Assessment

As in other mature industries, the glass industry resists changes in its tried-and-true manufacturing processes. It continues to use the technology of the original continuous melting furnace developed in Germany by the Siemens brothers in 1867. The glass melting process has been adapted to increase energy efficiency, improve product quality, take advantage of improved equipment or materials, or comply with government environmental regulations. Today's glass manufacturers enjoy a certain comfort factor with the process that has evolved over the last 100 years.

The technology of glass manufacturing lacks standardization, and the industry segments lack readily identifiable production interests. The four main segments of the industry—flat glass, containers, fiberglass, specialty glass—and even individual companies within a segment have adopted a broad range of melting technologies. All industry segments produce silicate-based glasses that require high temperatures to flux silica sand with other industrial minerals, but the industry segments diverge from this point into producing glasses with specific chemistries desired for the physical properties of the various glass product. Particular temperatures, various viscosities and different coefficients of thermal expansion are required for each segment if it is to have the most productive fabrication processes.

Conventional glass melting furnace designs have evolved into relatively efficient and reliable glass melting systems. Incremental changes have improved the operation of today's continuous glass melters sufficiently to forestall fundamental innovations in glass melting technology. With the demand to lower energy requirements, improve furnace life, install better pollution control equipment, and promote instrumentation for process control, glass technology has improved in certain areas: selection of raw material mixture; methods of increasing heat potential of energy sources and enhancing heat transfer; improvement of materials for facility constructions; acceleration of key chemical reactions within the melt; and removal of gas bubbles in refining. Melting technologies have been developed to meet the specific needs of each industry segment.

All segments of the industry accept established furnace designs as the standard. Large regenerative side port furnaces are now standard for float glass with incorporation of the Pilkington float glass process, which was perfected in the 1950s and revolutionized the flat glass industry. Large regenerative end port furnaces are considered suitable for container glass production. Oxy-fuel is being accepted for melting TV glass and E-glass fiber reinforcements. Justification of oxy-fuel for float glass melting, however, is difficult in areas where the cost of electric power to produce oxygen is high. Three full-scale commercial operations have demonstrated that conversion from air-fuel to oxy-fuel is possible.

Panel TV glass has similar quality requirements as high quality float glass, but defects result during production due to a furnace configuration that features a throat to transport glass from the melting chamber. Designers and modelers have proposed that panel furnaces be converted from throat to waist designs similar to those used on flat glass melters. But the industry hesitates to take the risk of major change. Concerns for high initial capital cost, limited operating flexibility, and retrofitting to comply with

environmental protection regulations all require that the glass industry face reality and confront the challenges that loom large.

Different requirements from manufacturer to manufacturer in glass chemistries are also a major obstacle in standardizing the melting process. Oxide-source raw materials differ among glass manufacturers; how materials perform during the melting process directly may impact selection of melting technologies. The volatile and corrosive nature of B_2O_3 in borosilicate glasses requires refractories of different properties than those used for melting soda-lime glasses. Low-alkali glasses require very fine raw materials that can create detrimental dusting conditions under certain combustion practices. Batch wetting can be easily accomplished for soda-lime glasses but not for most borosilicate glasses.

Throughout the last half of the 20th century, glass scientists and engineers pushed the limits of glass science and engineering, expanding knowledge of glass down to its very atomic structure. Efforts to advance the technology of glass melting have focused on batch and cullet preheating, air preheating, accelerated methods for rapid heat transfer and melting, and accelerated refining. New concepts for melting have ranged from segmented melters and refining zones to suspended electrodes and submerged combustion. Some of the breakthrough concepts have evolved into conventional melting systems; others have been incompatible with existing systems, posed too high risk for experimentation, or lacked other required technology or materials.

Despite the basic reluctance of the glass industry to take financial risks, it has incorporated some technical innovations to advantage. The float process for producing flat glass, high-performance bushings and spinners for fiberglass; Vello and Danner processes for producing glass tubing; multi-gob, multi-section bottle-blowing machines; and oxy-fuel firing conversions have succeeded perhaps because of lower risk to existing facilities, or because more products of better quality and lower net cost have brought financial reward. Some savings in energy and operations management might be realized from automating the glassmaking process as cited in Appendix B "Automation and Instrumentation for Glass Manufacturing." In the ongoing debate between machine and humans, each has their role. Machines are superior in some aspects of control because they do
not tire as observers, but the well-trained human is still superior to mindless reliance on
control devices.

Economic assessment of glass manufacturing

The current economic state of the US glass industry is mixed. The glass container segment has recently experienced one of its best years in a decade, but has become dependent on one application—alcoholic beverages. Competition from plastics remains a constant threat, and even in a good year container manufacturers struggle to earn the cost of capital, which is 10 to 12 percent of sales. Growth of flat glass and glass fiber segments has slowed from 4 to 6 percent to 2 to 3 percent in response to the sluggish US economy. These two segments generate relatively good operating margins at 10 to 20 percent of sales and generate cash flow. Some specialty segments are also affected by the US economy and are threatened by imported products.

Construction of glass melting furnaces requires major capital investment, and a furnace, once started up, cannot easily be shut down, some for as long as 15 years. Problems with new melting technologies can be costly to fix, imposing a devastating financial penalty, impacting production and sales as well as the company's reputation for quality and the integrity of engineers and scientists involved.

• ***Energy issues***
Glass melting is an energy-intensive process in a period of rising energy costs; energy represents overall approximately 15 percent of manufacturing costs. While only about 2.2 mmBtu should be needed to melt a ton of glass, current glass furnaces use between 3.8 and 20 mmBtu. A reliable forecast of future availability and cost of fossil fuels could be of major value in planning and developing glass melting technology. As customer requirements for quality have increased steadily, melting technologies have balanced production quantity with quality, thus increasing energy usage.

Although energy usage for glass melting has been reduced over the last several decades, actual energy consumed in melting glass is still greater than the calculated theoretical energy required. Of energy consumed, 70 percent is used to melt and refine glass. Of that 70 percent, 40 percent of the energy from combustion goes to melt raw materials, while 60 percent is lost through furnace walls and hot exhaust gases.

Energy consumption by the glass industry has been reduced considerably by the development of refractories that resist higher temperature; greater insulation of furnaces; improved combustion efficiency; preheating of combustion air with recovery of waste heat; and increased understanding of process and control. Further energy savings toward theoretical limits may be more difficult to obtain, as the industry believes it is approaching practical limits in energy reduction but continues to make incremental efforts to save energy. Some technologies are available to reduce energy consumption but savings incurred do not justify the capital investment at the current cost of the energy. To support the required glass product volumes and production rates, it may be necessary to develop high-temperature melters that, while consuming more energy per unit of time, have much higher output, or less energy per mass of product.

• ***Environmental issues***
The combustion-based melting process inevitably pollutes the air with NOx, SOx and particulates; emissions of VOC, heavy metals, crystalline silica, fine particulate and greenhouse gas emissions are concerns as well. Recent links of fine particle emissions to allergies and asthma in children and a $50 million study funded recently by the US Environmental Protection Agency (EPA) could lead to even tighter regulations in glass melting emissions standards. In general, changes in the melting process driven by environmental concerns have not led to increased production but to increased operating costs. Investment in environmental control equipment has placed additional pressure on the glass industry's already low return on capital.

Ever-expanding environmental regulations force the glass industry to find alternative, cost-effective melting technologies that maximize energy usage and reduce atmospheric emissions. Advances in glass melting technology must be developed for environmental compliance, furnace durability and cost effective production. Combustion regenerative and recuperative-heated furnaces must be replaced, modified or equipped to comply with clean air laws. Techniques to recycle glass industry wastes and used glass products must be developed. Melting tanks could be replaced with smaller, less expensive and more flexible melting technologies.

• ***Capital investment issues***
Glass manufacturing is a capital-intensive industry in a period of declining investments. With its long-term returns, it is less attractive to capital investors. Experimentation in glassmaking technology is costly, and to scale-up from experimental stage to production is difficult. The huge footprint of glass furnaces testifies to the capital-intensive nature of glass manufacturing and presents a major barrier to growth.

Most glass manufacturers expect one-to-two-year payback for capital investments such as a rebuild. This short-term financial expectation has led to smaller, evolutionary steps to improve the melting process because risk is perceived to be lower than for major innovation. Higher rates of return are imposed as hurdle rates for higher risk capital decisions and investments, resulting in slower realization of economic benefits. With competition from an increasing variety of alternative materials and products, mature glass products struggle to compete in price and performance.

Overall, the US glass industry does not attract new capital investment. Because of the huge capital investment required to build a melting furnace, serious efforts are made during production to expand the useful life of a furnace. These costs can exceed millions of dollars for large furnaces.

Current challenges

When glass-melting technology as currently practiced was surveyed, major issues of concern became clear. With regard to batch processing, manufacturers require better quality materials and better inventories of batch compositions. They need solutions to batch agglomeration problems; simplified, cost-effective mechanisms for preheating batch materials; and techniques for removal of coloring chemicals and reduction of surface foam.

With regard to melting operations, glass furnaces could be improved with better technology for energy flexibility and recovery of waste heat. Melters might be improved by segmented, or zonal, processing. Refractory materials could be improved for compatibility with innovative energy sources and resulting chemical reactions. High shear forces could benefit melting and refining. Submerged batch charging and submerged combustion also need to be considered. In the refining stage, efforts to minimize the use of chemical refining agents are needed to reduce cost of raw materials and to minimize toxic emissions. Effective thermal conditions, increased yield and production efficiency, and cost-effective environmental compliance technologies also need to be addressed by the industry as a whole.

A total automation system of instrumentation and sensors could be developed for the glass melting process from batch to finishing. At present, individual aspects of glass melting may be selectively automated but in no comprehensive manner. Process modeling, in-process sensors and advanced controls could be coordinated system wide to result in greater economic benefits due to waste reduction, energy conservation, emissions control and quality regulation.

The economic conditions within the glass industry are problematic due to a long history of competition within the industry itself, and now with other materials and products produced within the US or imported from other countries. A new business model for the glass industry could standardize processing and materials composition within manufacturing segments. Competition between individual glass manufacturing companies has been intense throughout the history of the industry and intellectual property rights and proprietary interests have been fiercely protected. Different industry segments have different needs; for example, float and fiberglass sectors have less need for furnaces with production rate or composition flexibility than do the container and specialty sectors.

Collaboration between industry and government national laboratories for technology development promises to be the best scenario for confronting the challenges that face the US glass industry. Coordinated efforts could improve buying power and lower capital costs. Reliable predictions of future increases in energy costs could provide the incentive for the glass industry to develop improved energy-saving technologies. This model has been conceptualized as “Glass Inc.”

The issue of funding for research and development is of great concern. Fear of failure and aversion to risk by a single manufacturer in an industry threatened by a shrinking market sector could hamper collaborative efforts. A public-private partnership could provide the resources with which to research and develop new energy-efficient technologies that would benefit the whole industry. The needed investments are too costly and the risk too great for individual glass companies
to fund these technologies alone. Investment decisions consistent with public goals and private business criteria could be based on proven technology developed cooperatively between industry and government.

Advancing glass melting technology

To improve the process of glass melting, an emphasis on research of methods for preheating batch and cullet, rather than melting itself, could hold the most potential. Preheating is a means to accelerate dissolution in the fusion process and reduce refining time. Energy and capital efficiencies of the glass melting process could be improved by a host of promising technologies in new materials, combustion and control systems. Glass industry professionals increasingly believe that radically different ways to melt glass, rather than gradual improvements, will realize the vision of the DOE "Roadmap" for 2020.

Glass manufacturing is one of mankind's oldest industries. Yet glass manufacturers must continue to seek dramatic ways to improve combustion techniques, develop refractories compatible with advanced technologies, regulate quality of raw materials, and develop glass formation process controls. Industry-wide solutions must be developed in the immediate future if glass manufacturing in the United States is to remain a viable industry.

In the six chapters of this report, the state of the glass industry in the United States is assessed from a number of viewpoints. Current technical issues are presented via an overview and an account of melting practices. Economic issues are reviewed from the perspective of glass manufacturers. Innovations in glass technology that have been researched and developed are presented in sufficient detail to evaluate their feasibility for review. The collective recommendations by glass manufacturing authorities and the findings of the study are presented for future consideration. The extensive appendices provide the basics of glass melting, details of automation control systems, technology innovations in research and development stage, literature and patent references, a glossary, and contributor references. This comprehensive document has been designed from the outset to serve as a major reference resource for industry, government and academe on the status of glass melting technology at the start of the twenty-first century.

Section A

Technical and Economic Assessment Report

Chapter I Technical Assessment of Glass Melting

I.1. Status of melting technology

Glass manufacturers generally consider current glass melting practice to be adequate—efficient and reliable. Yet the process, an adaptation of the technology developed in the 1860s by the Siemens brothers, today lacks the capability to meet demands of 21st century glassmaking. Typical of a mature industry, the glass industry has been reluctant to alter the principles of an aged manufacturing process, especially since adaptations over this long period of time pose less risk than new technologies that might conserve energy, reduce emissions, and minimize capital investment.

Most current melting technologies have been evolutionary, rather than revolutionary, only answering critical problems that could not be overlooked. With the evolution in furnace design, traditional glass melting has been improved by employing advances in combustion, refractories, raw materials, and glass forming process control. New technology has been adopted or rejected depending on whether it was appropriate for manufacturing in a given industry segment. This evaluation has been based on established priorities of quality, economics and process compatibility.

Melting technologies that have evolved in response to ongoing customer requirements for quality glass are primarily adaptations to the continuous melting furnace developed in response to manufacturers' expectations for shorter, one-to-two-year payback on capital investment. Past innovations in the glass melting process have focused on adapting combustion-heated furnaces to comply with clean air laws; developing techniques to recycle industry waste and used glass products; extending furnace lifetimes; and replacing large melters with smaller, less expensive, more flexible melting technology. Improvements to the traditional furnace technology have indeed resulted in lower energy requirements, improved furnace life, better implementation of pollution control equipment and advanced instrumentation for process control.

Advances in the glass melting process have been made in many other areas, such as selection of raw material mixtures; increased heating potential of energy sources and enhanced heat transfer; improvement of furnace construction materials; acceleration of key chemical reactions within the glass melt; and removal of gas bubbles in refining. But these improvements fall short of what is needed to advance glass melting. For example, changes in the melting process to meet environmental requirements have generally not led to increased productivity but have increased operating costs, further reducing the glass industry's low operating margins. These evolutionary improvements in melters have proved efficient and reliable enough that the fundamental aspects of the Siemens technology have never been replaced with alternative, advanced technology. Incremental, evolutionary improvements in technology have been favored over bold, radical changes because of the industry's aversion to risk and the high cost of failure. For the conservative-natured glass industry, the risks of failure have been considered too high and the return on investment too uncertain.

However, the challenges that face today's glass industry demand serious consideration of alternative melting technologies. Because of stricter environmental regulations, uncertainty of future costs and availability of energy resources, and scarcity of capital for facilities and operations, glass manufacturers must look ahead and make a concerted effort to advance glass-melting technology.

Any nationwide, collaborative effort to develop new glass melting technologies has been hampered at the outset by the divisive nature of the industry, which is fragmented into the four specialized segments of float glass, container glass, fiber glass, and specialty glasses. These segments themselves are further fragmented into sub segments. The segments have different glass chemistries, different products, different equipment, and different properties, complicating even further any attempts to advance glassmaking technology.

The common theme for technical improvement of the glass melting process that emerged from this study was that development of glass melting technology should focus on individual components of the glass fusion process and perhaps separate each function by process segmentation steps. The technology for segmenting the glass melting process is considered by industry experts to hold the most promise for a revolutionary and innovative glass melting system. As energy costs escalate, intensifying and optimizing the various aspects of melting and refining become attractive for technology development. The consensus of experts consulted for this study was that priorities for considering innovative technology should be given to technologies that will require lower energy costs for operation and lower capital costs for operations and facilities.

The areas with most potential for melting improvement include batch and cullet preheating; a driven process to accelerate shear dissolution in the fusion process; and innovative means of reducing refining time. Development of new glass melting technology will be stimulated by:

- higher quality requirements;
- reduced emissions and complying with environmental regulations;
- improved fuel efficiency and development of alternative melting fuels;
- lower capital costs;
- capital productivity;
- improved flexibility of operations;
- lower final glass product costs;
- new glass melt compositions;
- improved worker ergonomics;
- recycling manufacturing waste;
- adapting glass melting against metal containers;
- updated skills of operating personnel;
- intensifying competition with alternative materials.

I.2. Historic melting processes

Prior to introduction of the Siemens furnace in the mid-19th century, glass was produced on direct-fired pot melters, in which batch was introduced into the melter, then refined and manually gathered and produced into an object. The Siemens furnace accelerated the

process when it introduced continuous glass production in a configuration that incorporated waste heat recuperators and used liquid or gaseous fuels.

Whether the furnace is regenerative, recuperative, electric or oxy-fuel fired, glass is produced in continuous melting tank furnaces. In each type of furnace, the mixed batch floats on the surface of previously produced molten glass. The overall rate of melting fusion depends mostly on the surface of the molten glass. Consequently, surface area of the tank is defined by expected output. Depth of the glass is more dependent on glass chemistries and color variables, and is variable because of the reliance on convection currents. A large inventory of glass within the melting furnaces reduces flexibility in changing glass composition or glass color. (Barton, ICG, 1992)

Few revolutionary melting technologies have been commercialized in over 130 years except for the continuous all-electric melters developed in the 1930s and the PPG P-10 system developed in the 1980s. Despite potential financial consequences, the industry has pioneered advances in glass forming technology such as the Pilkington float process for producing flat glass; the Corning fusion process and the high speed ribbon machine for making light bulbs at the astounding speed of up to 2,500 per minute; high-performance bushings and spinners for fiberglass; Vello and Danner processes for producing glass tubing; and multi-gob, multi-section bottle-blowing machines. These technologies attracted interest because of their low risk to an existing facility. They promised financial rewards with production of more and better products at lower net cost.

Revolutionary changes in glass melting technology have mostly involved heating and energy processes: (1) conversion to the continuous melting process and use of waste heat recovery for combustion air preheating before 1900 up to the turn of the 20th century; and (2) the use of 100 percent electrical energy to melt glass, which was commercialized before mid-20th century. Over the past two decades, innovations in furnace melting systems have changed from being developed by glass manufacturers' in-house engineering groups, who have sought lower manufacturing costs or increased productivity, to specialized architectural and engineering (A&E) organizations, who have sought licensing fees and contracts for new facility construction or furnace rebuilds. More innovations in glass technology have been developed in Europe, primarily in Germany, and in Asia, especially Japan. These areas were historically faced with higher energy costs.

The glass industry has readily accepted new technology when it has been demonstrated to operate successfully, and when other manufacturers have become aware of its performance. Oxy-fuel technology, for example, has been accepted by almost 25 percent of the glass furnaces in the US during the 1990s following its successful installation at Gallo Glass in California. Oxy-fuel technology is also being accepted by the industry because it operates on principles similar to conventional furnaces, especially unit melters. It also meets other requirements and has been proven to be a relatively low-risk method for improving glass melting.

I.3. Industry perspectives on current technology

With regard to current glass melting technology, leading glass manufacturers have eight major concerns. Each of these concepts deserves consideration and understanding of how it could affect decisions on adopting advanced technology.

1. Can capital and operating costs for glass melting be justified by market demands?
2. Energy savings are driven by net cost savings only.
3. Higher capital productivity can justify higher operating costs.
4. The glass industry has a short-term technical and economic horizon.
5. All glass industry segments are averse to both technical and economic risks.
6. Perceived differences among industry segments limits interest in collaboration despite the common concerns for melting, particularly environmental issues.
7. Without changes in key motivations, the industry is not interested in a consortium to develop a large-scale melting unit.
8. Motivation to change glass-melting practices, develop new melting technology and collaborate on costs and risks could result if the future of energy, capital and environmental regulations were clearer.

I.3.1. Quality costs

In most of the product segments, customers have steadily increased their demand for quality glass over the past few years. Increases in glass melting production rates and reductions in operating costs conflict with obtaining the highest glass quality. And since melting technology influences glass quality, melting technology must change. All current melting technologies have a substantial trade-off between quality requirements and production rates, particularly in the higher volume, traditional glass industry segments. (See Figure I.1.)

Use of additional energy in the melting process can improve quality or production rate or both. Conversely, reduction of energy consumption for a furnace may require reduction in pull rate or deterioration in glass quality, which is not a viable option. Mandatory use of post-consumer cullet causes product quality problems when using current melting technologies. Several recent changes in glass melting practice, such as use of corrosion-resistant, high-zirconia, fused-cast refractories for higher temperatures and oxy-fuel melting conversions to produce TV tubes and lead crystal, have resulted from quality requirements.

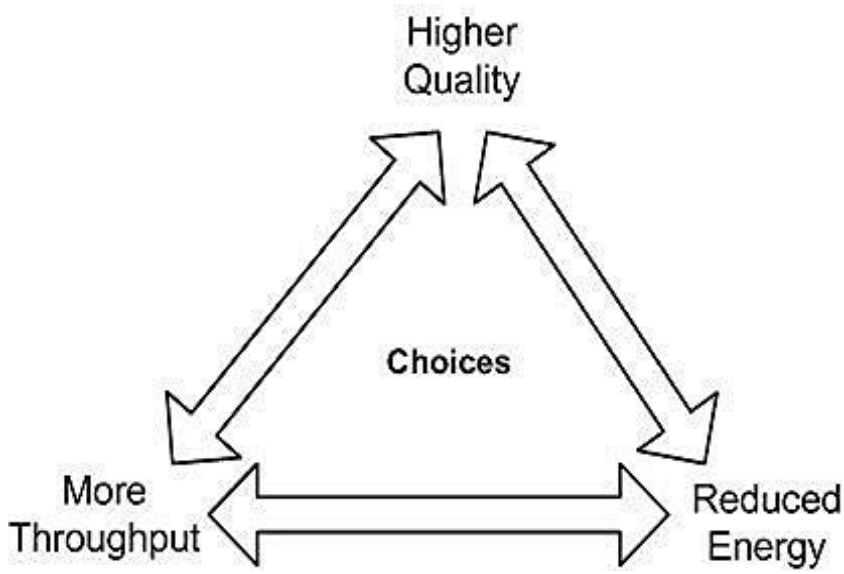

Figure I.1. Quality, Energy, Throughput Choices.

I.3.2. Energy savings

Actual energy consumption for melting glasses is greater than the calculated theoretical energy despite reductions in energy used for melting over the last several decades. Minimizing energy cost per ton of glass produced is more important than reducing energy content measured in thermal units. This means considering reducing the cost of energy as well as reducing the actual number of Btu's consumed.

As energy efficiency in glassmaking has evolved over the last 100 years, furnaces have been converted from coal producer gas to high-caloric fuels of oil and natural gas. Fused-cast AZS refractories have replaced low-grade aluminosilicate refractories for glass containment to allow higher glass melting temperatures, greater use of insulation and longer furnace campaigns between cold repairs. Regenerators have been enlarged with improved checker design and structure. Post-consumer glass is being recycled. Larger furnaces are producing greater throughputs.

Modern glass melting still requires a high-temperature device that consumes a significant quantity of energy to achieve production quality volumes and rates. Although technologies are already available to reduce energy consumption, in most cases, the capital investment costs for energy-saving technology exceed the value of potential savings at current energy (natural gas and electricity) rates. Some proven energy reduction melting technologies go unimplemented, and other concepts have been identified to reduce energy consumption further.

Energy consumption records from glass melt furnaces show improvement. To melt one (1) ton of container glass, an average level of 40 GJ energy (34.4mmBtu/short tons)(1GJ/metric ton=0.86 mmBtu/short ton) was used in 1920. In 1970, energy consumption of 8–9 GJ/ton molten glass was typical in this sector. In 1994, the energy

consumption level was 5.5 GJ (6.9–7.7mmBtu/short tons) per ton of molten container glass in Europe.

Glass furnace energy consumption includes the fuel input of the melting furnace, electricity for boosting, oxygen for firing the furnace, (primary energy, including electric energy of one (1) kWh/MJ and oxygen consumption of one (1) m^3 oxygen, is 0.33–0.36 MJ). These figures do not include the energy consumption of downstream devices, i.e., distributors, forehearths, etc., and air pollution equipment. Comprehensive statistics for glass melting energy of glass furnaces in the United States have been difficult to obtain. (See Figure I.2. for Energy Consumption of 123 Glass Furnaces.)

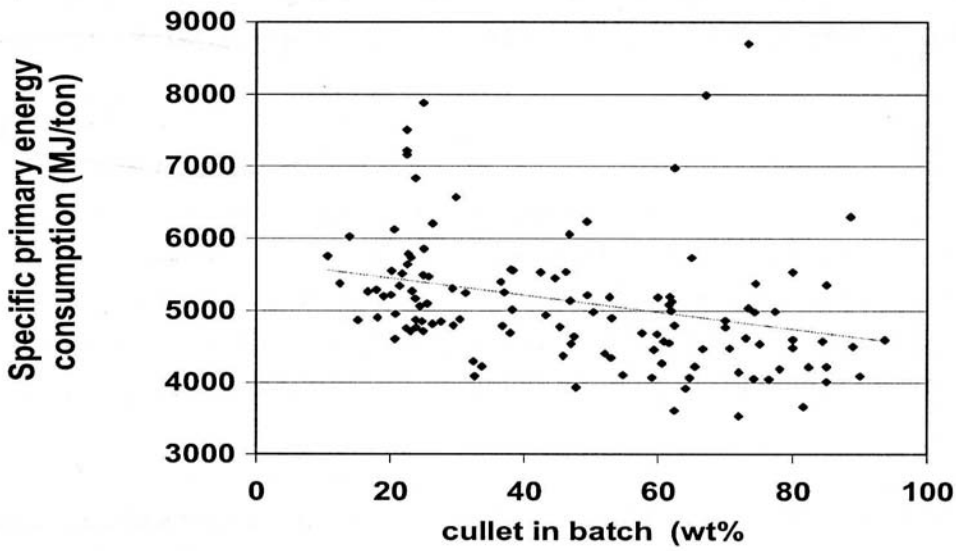

Figure I.2. Energy consumption of 123 glass furnaces globally, ranked low to high.

Financial models that justify development of technology and capital investment for energy reduction make assumptions about future cost of energy. However, future cost and availability of energy is uncertain. The underlying assumption of these financial models, usually not explicitly stated, is that the energy needed will be available in the quantity and form the technology requires. Energy has been readily available during the past 25 years, and the "Annual Energy Outlook" of the Energy Information Administration in the US Department of Energy forecasts relatively low energy cost escalation to 2025. (Editor's Note: Given recent developments (2004), this forecast is now questionable). Value of the energy saved at the current cost of energy with an assumed low rate of cost escalation is insufficient to justify many energy-saving technologies, particularly technologies that require significant capital investment.

Increased volatility in some energy prices, such as natural gas, may cause some glass manufacturers to consider alternative scenarios for future energy. In consultation with glass industry experts over the effects of energy costs three to five times greater than the current energy costs, we conclude that if forecasts of the future were to predict significant increases in energy costs, the glass industry's interest in developing energy-saving technologies, or alternative energy sources, would increase dramatically. Without

credible forecasts that energy costs will escalate in the future, aggressive pursuit of revolutionary changes in glass melting technologies to save energy probably will not happen.

European energy conservation efforts

A study of European furnaces in 1999 has provided glass-melting energy benchmarking for European furnaces. (Ruud Beerkens, TNO, 2001 Conference on Glass Problems) Energy-intensive industries in the Netherlands participated in the program for the Dutch government to apply energy efficiency benchmarking to decrease national energy consumption and CO_2 emissions over a 12-year period. Companies that participated in the program were in the top 10 percent of energy-saving industry practices. One incentive of the program was to be exempt from CO_2 tax and obtain more flexible permits.

The European furnaces that were investigated provided statistical data on energy efficiency based on furnace size, age of furnace, cullet-to-batch ratio, specific load, type of furnace (end port, oxy-fuel fired, cross-fired regenerative, recuperative, all-electric), and glass color. The most energy-efficient furnaces appeared to be large end-port furnaces (>250 metric tpd), particularly those with large regenerators or those equipped with a cullet or batch preheater system. The most energy efficient container glass furnace was found to be a natural gas end-port furnace that performed at 3.9 GJ/ton molten glass (3.3 mmBtu/short ton) at a level of 50 percent cullet. The most energy efficient float glass furnaces were found to be regenerative furnaces that showed energy consumption levels between 5 and 5.5 GJ/ton molten glass (4.3–4.7 mmBtu/short ton).

The most energy-efficient furnaces overall showed energy consumption of 3820–3850 MJ/metric ton of glass (3.29–3.31 mmBtu/short ton), based on 50 percent cullet with primary energy consumption from electricity. Statistical analysis of the European study showed that glass color at the 50 percent cullet ratio does not affect specific energy consumption. This study showed that energy consumption values as a function of the melting load exhibit higher pull rate and required lower energy per ton. Some of the furnaces studied were equipped with cullet preheaters or combined batch-cullet preheating systems.

Oxy-fuel container furnaces proved to be no more energy efficient that regenerative container glass furnaces when accounting for energy required for oxygen generation. The average end port furnace with a melting capacity above 200 metric tpd requires 6 to 7 percent less energy on average than the oxygen-fired furnace that requires oxygen production. Modeling of energy balance for glass furnaces indicates that 10 percent exchange of normal soda-lime-silica container glass batch by cullet will lead to 2.5–3 percent lower energy demands for melting. A rough correlation between cullet ratios to energy consumption of 123 container glass furnaces shows an increase from 50 to 60 percent cullet to 2.3 percent energy savings. Thus, the influence of the cullet ratio on energy consumption appears to be less than expected from the energy balances.

Special energy consumption, normalized to 50 percent cullet in the batch and primary energy equivalents, increased on average with 0.8–0.9 percent per year of age for the 123 investigated glass furnaces. This means that during five to 14 years of furnace lifetime, energy consumption may increase by seven to 10 percent due to refractory wear, which causes greater wall heat losses, air leakage, insulation wear, or plugging and fouling of regenerators. For large end port regenerative and recuperative LoNOx melters with cullet preheaters that use 70 percent cullet, energy consumption levels were about 3.7–3.8 mmBt/short ton (normalized to 50 percent cullet).

The Sankey diagram (Figure I.3.) of energy flows in the most energy-efficient container glass furnace—cross-fired regenerative furnace without electric boosting—75 percent cullet, with batch preheating. About 49 percent of the energy input was used for heating the glass and the fusion reactions. Glass melt energy represents sensible heat of the glass at throat temperature.

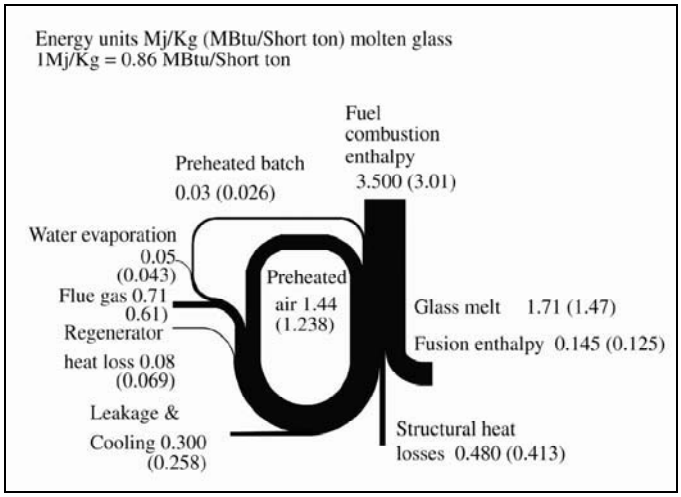

Figure I.3. Crossfired regenerative 70-75% cullet and batch preheat Sankey diagram from Ruud Beerkens, TNO; represents one of the 10% most energy efficient furnaces (container glass) in Europe

The general consensus of European glass manufacturers is that batch preheating can potentially decrease specific energy consumption by about 10 to 15 percent. By increasing cullet for raw material by 10 percent, energy input requirements could be reduced by 2 to 5 percent. As the lining of the furnace deteriorates with age, energy input requirements can increase by 0.1–0.2 percent per month.

I.3.3. Operating costs for capital productivity

With few new glass plants being built in the US over the past few years and additional production needed to meet market demand, glass manufacturers have attempted to increase productivity by increasing output from established furnaces. Since space in most glass plant facilities is limited, the possibilities for expansion of furnace size are limited, and capital cost to build new furnaces is high. Manufacturers may choose to accept the extra cost of melting per ton of glass by increasing production with electric boosting of fossil fuel or adapting to oxygen firing.

Capital-intensive manufacturing businesses such as glass have struggled especially in the past 10 years to earn rates of return that exceed corporate capital costs. This concern for capital productivity has been a major stimulus for research and development of glass melting technology. Because the cost of building large furnaces can exceed $20 million, less capital-intensive, smaller furnaces have found a place in the glass industry. Even though they are less energy efficient and more expensive to build per unit of glass produced, they are more flexible for meeting marketing demands and rebuild time is short.

Furnace life

As a trade-off for improved capital productivity, manufacturers accept some deterioration in energy efficiency and production capacity by delaying "cold rebuilds." While operating an aging furnace, manufacturers also risk catastrophic failures and unplanned production outages that affect their ability to meet their commitments to customers. By extending furnace life, capital investment can be deferred as long as possible, usually until quality, safety, or production demands are jeopardized. Furnace life varies with glass composition, type of refractory used, and operating factors such as quantity of glass produced each year in the furnace. Typically, furnace life is five to 14 years for traditional, large-volume glass products.

The industry is more willing to consider a revolutionary concept to develop a melting system with lower construction costs as they relate to capital investment and meeting environmental regulations. At present no manufacturing segment has a standardized melting furnace, in part because the industry has continually optimized furnaces to balance demands for specific production rates, glass quality, acceptable energy consumption and useful life.

Refractories

Longer refractory life is an important goal in advancing glass-melting technology. Industrial glass melting furnaces are constructed with a number of different classifications of refractories. Refractory materials are selected for properties that serve a specific purpose. Many factors influence the choice of a suitable refractory for a given application. In some cases, maximum service temperature may be the deciding factor. In others, high refractoriness must be coupled with resistance to thermal shock. Chemical resistance to batch, raw material components, metals, refractory erosion slags, or disintegration by reducing gases may be most important factors. High insulation value might be desirable in some cases, or high thermal conductivity in others.

High-temperature properties of refractories depend mainly on their microstructures, particularly bonding structures and the presence of low-melting components. The properties of refractories that can be determined most readily are chemical composition, bulk density, apparent porosity, apparent specific gravity, and strength at atmospheric temperatures. These properties may be used as controls in the manufacturing and quality control process. At elevated temperatures the key determining properties of refractories are hot modulus of rupture, hot crushing strength, creep behavior, refractoriness under

load, physical and thermal spalling resistance, dimensional changes (elastic modulus, thermal expansion, and growth from chemical alteration), and thermal conductivity.

Glass chemistry type and raw material properties determine which volatile species will be present after chemical reactions. The type of burner and physical location of burners determine if carryover of raw material components will be an issue. Operating temperatures, as well as the degree of insulation, define which reaction mechanisms may occur. Superstructure applications require load-bearing capabilities in addition to resistance to volatile or carryover attack.

I.3.4. Short term technical and economic horizon

Financial justification to replace a facility or to rebuild, as well as to maintain and support projects, has become more intensely scrutinized. Because most glass manufacturers have a short-term financial expectation—one to two-year payback—for capital investments in an established business, technology for the glass melting process has been improved through smaller, evolutionary steps. This approach is perceived to carry a lower risk than investing in revolutionary technology that might have higher rates of return but would take longer to realize economic benefits. Some innovative technology proposed with a three to five-year payback has gone unfunded because financial decision makers consider the time horizon to be too long.

I.3.5. Aversion to technical risks

Given the present economic climate, manufacturers accept certain established furnace designs as the standard for their individual segments of the glass industry: large regenerative side port furnaces by float glass (although oxy-fuel firing for float glass melting has been demonstrated in three, full-scale commercial operations); large regenerative end port furnaces by container glass; and oxy-fuel furnaces for melting TV glass and E-glass fiber reinforcements.

However, environmental and glass quality factors may influence more conversion from air-fuel to oxy-fuel in the float glass segment, despite the high cost of electricity to produce the oxygen in some areas of the country.

I.3.6. Similarities and differences among segments

The four major glass producer segments—float, container, fiberglass, and specialty glasses—share a number of concerns, yet they differ in various ways that tend to hamper broad-based, industry-wide collaboration. Different melting technologies are preferred within each segment. Raw materials differ from segment to segment, as do requirements for product quality and metrics for quality measurement. To be compatible with the most productive fabrication processes of their particular glass products, manufacturers require other properties, particularly temperature versus viscosity and coefficient of thermal expansion. Furnaces differ in size and employ different melting technologies, thus requiring different capital and varying operating costs.

Yet these segments have much in common. All produce silicate-based glasses. All glass manufacturers employ melting technology that involves high-temperature fluxing of

silica sand with a variety of industrial minerals to produce a particular glass. The industry segments share common concerns: purchase of batch materials, purchase of energy, and melting of batch and cullet.

Moreover, they are concerned about such issues as environmental compliance and delivery of high-quality glass to downstream operations. Other areas of common interest include oxygen combustion; electric boosting; bubbling; and batch preheating. Each segment faces different challenges to comply with governmental regulations.

Environmental concerns of segments

Some technologies are better than others in their degree of environmental pollution. The melting process within combustion-based melters inherently pollutes the environment with NOx, SOx, and particulate emissions. Cold-top electric melters do not emit these pollutants. However, the higher temperatures of electric melters lead to shorter furnace life, and cost of electric power is higher than that of fossil fuels. Conventional furnaces have faced ever-increasing requirements for reduced air emissions. Particulate matter from batch volatile components, i.e., SOx, alkali or borates, all require some level of control under regional, state and federal regulations. All add-on devices require high capital and operating costs but do not improve productivity. Many factories have space restrictions that prevent add-on options. Regenerative furnace designs with chrome-bearing refractories may need to be adapted due to more restrictive waste disposal regulations.

Alternative technologies must be compared with conventional furnaces based on all configurations that meet emission control requirements. Particulate control involves a variety of process modifications, batch adjustments, or add-on devices such as bag houses or electrostatic precipitators. Adjustments to sulfur-containing batch components or add-on wet or dry scrubbers are needed to control SOx from low-sulfur fuels. Modifications to the combustion process, changing temperatures and reaction possibilities, and post-combustion gas treatment revert NOx back to N_2.

Emissions from a glass furnace fired with fossil fuels take the form of combustion products, namely oxides of sulfur, thermal NOx, and carbon dioxide. Other emissions arise from particulate carryover and decomposition of batch materials, particularly CO_2 from carbonates, NOx from nitrates, and SOx from sulfates. Sulfate is required in modest levels as a refining agent as well as to promote oxidizing reaction. Emissions from low level halides or metals and fluoride formulations may also occur where these raw materials are present in a batch.

Emissions of all volatile batch components are considerably lower in electric furnaces than in conventional furnaces due to the reduced gas flow and absorption, condensation, and reaction of gaseous emissions and the heat from the melt. However, electric melting is not currently in use in the US for large volume glass production (>300 tpd). Production of continuous filament E-glass using 100 percent electric melting is not considered economically or technically viable. Higher alkali insulating wool fiberglass can be produced in cold-top all-electric furnaces, up to 200 tpd. A number of these furnaces

have recently been converted to oxy-fuel firing to obtain lower operating costs and greater operating flexibility, i.e., longer life, use of recycled cullet, and broader range of pull rates.

I.3.7. Stimuli for melting technology development

The general assumption throughout the industry that the next 20 years will reflect the trends in glass manufacturing for the past 20 years could be countered by reflections on environmental regulations for glassmaking; energy availability and costs; and capital availability and cost.

More restrictive environmental regulations imposed on glassmaking by government are perhaps the most important factor. Environmental issues for the glass industry include emission of NOx, SOx, VOCs, heavy metals, crystalline silica, fine particulate, and greenhouse gases. While the US glass industry has improved environmental performance considerably over the last several decades, it may face even more severe environmental regulations in the future, especially with regard to particulate emissions. The US Environmental Protection Agency (EPA) has recently committed $50 million to study fine particulate emissions. Community health organizations are concerned about the link between fine particle emissions and allergies and asthma. Without changes in key motivations, the industry is not interested in a consortium to develop a large-scale melting unit. To comply with stricter environmental demands, the glass industry would need to develop cost-effective compliance technology that does not create greater complexity in operations.

Uncertainty around energy availability and relative cost of fossil fuels versus electricity are other factors that could affect the glass industry's future. The industry could be driven to change melting practices if energy costs should escalate substantially within the next few years. A reliable forecast of energy costs would be valuable in planning and developing glass technology. If energy costs do escalate, interest might be kindled in the technology of segmentation of melting and refining and intensifying and optimizing each segment.

However, although incremental efforts to save energy and reduce heat losses are ongoing, the amount of energy that can be saved in the future is much less. The industry believes it is approaching practical limits to further step changes in energy reduction. Although technologies are available to further reduce energy consumption, the expected energy savings from these technologies are not sufficient to justify capital investment at the current cost of energy and cost of capital.

Although the glass industry is highly competitive, efforts such as the DOE-sponsored Glass Industry Vision have helped define interests and priorities for melting process improvements that could strengthen the industry nationwide. Problem solving and common interests have been shared in forums such as the Glass Problems Conference and the Glass Manufacturing Industry Council. Manufacturers have also cooperated in responding to environmental regulations.

I.4. Motivation to advance melting technology

Much of the industry surveyed for this report assumes that glass-melting technology will continue in the next several decades at the same direction and pace as it has for the past several decades with higher energy costs, higher environmental standards, and higher capital costs. This assumption could be altered by several emerging factors. Costs of capital investment and operations to comply with environmental regulations threaten to increase in the future. Greater efforts are being made to restrict emission limits and a broader base of regulatory agencies has been established with the passage of the Federal Clean Air Act Amendments of 1990 and 1996. Melting processes must change to comply with these regulations. But no matter what the layout of a glass plant and its production equipment for a given melting technology, glass-melting furnaces require substantial capital investment. The industry is comfortable with known processes upon which it can rely.

To attain expected levels of thermal efficiency, conventional melters rely on a number of design and operational aspects. Up to 15 percent of glass manufacturing costs go for energy to melt batch materials. To improve fuel efficiency would reduce costs to some extent, but the industry has not been motivated due to a lack of sufficient forecasting for future energy costs, making it difficult to justify R&D of energy efficient technologies or alternative fuel source devices. Refractory design, material composition, and insulation have improved to increase furnace performance. Waste heat recovery using regenerators and recuperators returns useful energy to the combustion process. Operating equipment, instrumentation, combustion control, and even batch preparation have contributed to a continuing trend of lower energy per ton of glass melted.

Some alternative raw materials, such as optimum mixed alkalis or lithium compounds, can be used to reduce total melt energy from 2 to 5 percent. In conventional furnaces such savings may be undetected or lost in the noise of inaccurate energy measurements because most furnaces have thermal losses greater than 50 percent of the input energy.

Technical areas that could have the highest impact on glass melting advancement would have the following criteria: ability to produce good glass economically; adaptable to existing as well as advanced glass melting systems; ability to generate predictive technology models; and benefit to all four industry segments. Specifically, these priority areas are as detailed below.

1. **Microscopic batch melting:** Since the batch pile is a major source of defects in the melt, a better understanding is needed of the sequence of batch reactions during prereaction and preheating and control mechanisms for agglomeration and segregation within the batch. This would allow the batch pile to be integrated into computer models of the melt for liquid formation and gas release, which would be combined to predict foam generation in the reaction zone. To model this reaction, experimentally measured gas solubility in molten salts and low-silica melts is needed.
2. **Macroscopic batch melting:** Experimental methods to measure the flux of defects into the convecting melt from the batch layer could be used directly in existing defect models. Models of batch layers based on measured thermal and rheological properties are

needed to describe the batch layer in fluid flow/heat transfer models. Measuring these transient properties in the presence of strong temperature gradients requires new experimental methods.

3. **Dissolved gases:** Models of gas exchange and fining are limited by two major problems. Experimental solubility and diffusivity measurements must be accurate absolutely, not just relatively. Values accurate to a factor of two are adequate for fining models, but accuracy within 10 percent is needed for locating sources of bubble defects, especially for reactive gases (H_2O, O_2, SO_2, CO_2). Next, sound theoretical methods and efficient computer models are needed for diffusion with reaction (e.g. O_2, SO_2). The concept of melt structure and oxygen bonding must be more rigorous. When these problems are corrected, gas exchange in real systems that contain multiple reactive gases and multiple polyvalent ions can be treated reliably.

4. **Foams:** Fundamental understanding of foams in melters is lacking, despite their importance in both heat transfer and fining. By understanding what determines the stability of glass bubbles on surfaces and measured composition and property gradients that occur in films, models could be constructed for residence time of a bubble on the melt surface before it breaks or reenters the convection flow and leads to foam breakage rate models.

5. **Melt redox reactions**: With successful development of electrochemical and other measurement methods for the oxidation state of each polyvalent at temperature, interactions of multiple polyvalent ions in melts will be better understood.

6. **Radiative heat transport**: With the availability of laboratory methods to measure spectral absorptivities at high temperatures, models could be developed to measure and predict the absorptivities of compositions and redox conditions not already measured. Scattering from particles and bubbles to deal with heat transfer near the batch layer and in the fining zone should be modeled.

7. **Homogenization**: A mathematical model of charge-coupled multi-component diffusion in melts is not available on a theoretical level. On an applied level, the reliable models to predict removal of cord require: Computational Fluid Dynamics (CFD) models of the efficiency of mechanical stirrers as well as the incorporation of mass diffusion into CFD models of convective flow in furnaces. For these models, measured diffusivities of cations in melts and a theoretical basis for predicting diffusivities from composition are needed. At a basic level, a standard method to describe inhomogeneities in glass is needed, perhaps in terms of local concentration variations. A practical method to measure flow velocities and directions in melts to verify basic flow models is also needed.

8. **Defects**: While a fundamental model for removal of stones and knots by dissolution with shear would be helpful, the greatest need is for practical methods to verify defect models by sampling from operating melters and by *in situ* measurement of defect concentrations and sizes.

9. **Volatilization**: Volatilization rate is controlled by both gas-side and melt-side transport resistance in most practical cases. A simple model of this two-step process, together with extensive measurements of volatilization rate from large glass melt surfaces with controlled gas velocities, would provide better control over this important process.

10. **Refractory/melt interaction**: Local corrosion rates in melters are still predicted by end-of-campaign examinations. The need to design the melter more fundamentally

would be possible with a more detailed thermal and flow modeling around troublesome features such as throats and electrodes. Better laboratory simulation methods are needed, particularly for upward drilling corrosion rate. The corrosion process is better understood with measured density, viscosity, and surface tensions of melt compositions partially saturated with refractories, and measured diffusivities under conditions of refractory/melt interfaces. These should be incorporated into models of composition profiles in the melt near the refractory interface that includes density-driven convection. Examination of mechanisms and experimental measures of refractory blistering are also needed.

11. **Electrode corrosion**: Melt reaction with electrodes is also a fundamental barrier to higher melting temperatures. No models are available for corrosion of electrodes with redox reactions. Active bubbling on electrode surfaces also creates an especially serious condition. The mechanisms that control bubble generation rates on powered electrodes are not clearly understood; models that link bubble generation to electrode corrosion are needed.

12. **Thermodynamic modeling**: Thermodynamic tools used in process design by other high-temperature chemical industries are just beginning to be used widely in glass melting. These tools are potentially useful for predicting conditions for phase separation in the glass melting process. Chemical activities used in place of concentrations could markedly improve understanding of diffusion-controlled processes such as homogenization, volatilization, corrosion and crystal growth. For these tools to be useful, solution models for the free energies of melt components over the entire range of commercial glasses are needed. These models will require both theoretical work and measurement of activities in multi-component melts to test the free energy models such as measured vapor pressures over silicate melts.

13. **Sensors**: A larger effort should be made to measure conditions inside melters, given the importance of verifying the computer models already available. Even the continuous long-term measurement of temperature in combustion spaces has not been fully mastered. In-melt temperature sensors corrected for radiation transport and the ability to measure heat flux at refractory interfaces are also needed.

I.5. Conclusion

The technology for glass melting used in the US glass industry today has evolved from the Siemens continuous melting furnace of the 1860s into a design that is adequate and familiar. Glass manufacturers have operated in an extremely conservative way to avoid the risk of systems failure. But increasingly stringent environmental regulations, uncertainty of energy sources and costs, and high capital costs suggest the importance of exploring alternative glass melting technology.

Past innovations to the melting process have been adaptations to comply with clean air laws, recycle industry waste, extend furnace life, and devise more flexible melters. But more improvements are needed. Research for this report indicates strong industry interest in pursuing technology for segmenting the glass fusion process.

During the 20th century, few revolutionary melting technologies have been commercialized. Exceptions include the all-electric melters developed in the 1930s and the PPG P-10 system developed in the 1980s. Advances in glass-forming technology that

have evolved with little risk and substantial financial reward to industry have included the float glass process for flat glass; the fusion process used for 0.6mm thick active matrix glass for laptop and flat screen TVs; high-performance bushings and spinners for fiberglass; glass-tubing processes; high-speed ribbon machines for lamp envelopes; and multi-gob, multi-section bottle-blowing machines. The glass industry will accept new technology when it is demonstrated to operate successfully and when other manufacturers become aware of its performance.

The overriding sentiment in the glass industry is that future glass-melting technology will evolve at the same pace and in the same manner as it has for the past few decades, addressing problems with minimal risk and necessary capital investment. The most prominent areas for improving melting technology include batch and cullet preheating, acceleration of shear dissolution in the fusion process, and reduction of refining time. The development of new technology will be stimulated by higher quality requirements; stricter environmental regulations; cost and availability of fuel; capital costs; capital productivity; need to improve flexibility of operations; reduction of product cost; new glass compositions; better worker ergonomics; need to recycle waste glass; and competition with other materials and imported goods. Synthetic fuels, generated by the glass industry or in combination with other energy intense industries for generation of lower cost energy may be a future consideration.

In this study, glass manufacturers expressed eight major concerns about current operations for glass melting. Their concerns ranged from unknown costs of capital and operation required for quality production to unknown future costs of energy and federal regulations. To manufacturers, minimizing energy cost per ton of glass produced is more important than reducing energy content measured in thermal units. Energy conservation technology has advanced further in the European glass industry than in the United States due to stringent government regulations in Europe.

Cost-effective environmental compliance technology may become a critical need as government restrictions continue to intensify. Reduction in energy usage has been achieved over the past few decades to the extent that the amount of energy that the industry uses is approaching the practical limits to further step changes in energy reduction.

Although the glass industry has been defined as a mature industry, it lacks the degree of standardization and common interests in technology and operations characteristic of a mature industry. The glass industry is fragmented due to the segmentation into four major glass areas of production that are further divided into sub-segments. Each industry segment, and even individual companies within a segment, operate several different furnace designs and use different melting technologies.

Capital availability and energy cost could impact the future of glass melting technology. Changes in tax incentives for capital investment, i.e., a tax credit for adoption of best practices, could stimulate new investment and changes in glass manufacturing. Low capital costs could stimulate creativity in the capital-intensive industry as vacuum

refining, higher performance refractories, and new glass products would be of more interest if capital investment hurdle rates were lower.

Chapter II Economic Assessment of US Glass Manufacturing

II.1. Economic overview

The US glass industry is a strong factor in the nation's economy, producing 20 million tons of glass a year, 20 percent of the 100 million tons of glass annually produced worldwide. Moreover, the glass industry employs an estimated 148,000 workers, making it a substantial contributor to US per capita income. An economic assessment of glass manufacturing in the United States today is essential if the industry is to survive current challenges and gain long-term viability.

This economic analysis of the glass industry is intended to enable comprehensive planning that will enhance glass production nationwide. The economics of the American glass industry, like many commodity industries, is facing very strong competition and economic challenges that limit profitability. This has resulted in a very precarious situation in many segments of the industry. Indeed the number of glass tanks in the United States has fallen by roughly 65 percent in the last 25 years, but the industry has managed to maintain its output with increased efficiency. Today the actual volume of glass produced is only slightly below the tonnage produced 25 years ago.

To determine how the industry can survive today's challenges, a broad cross-section of the glass industry, including 90 percent of its larger manufacturers, was examined for economic trends. Data and perspectives on the economic status of glassmaking were compiled through interviews and workshops with glass melting experts throughout the United States and Europe. Over 75 corporations, companies and academic institutions were consulted over a six-month period, March through August 2002. Statistical data up to the year 2002 were obtained through the US Department of Commerce. Statistics were also sourced by various market studies such as the *SRI International Chemical Economics Handbook* and *Freedonia Studies*.

Accurate statistics for glass manufacturing profitability of the four industry segments are difficult to obtain because privately owned companies do not report financial information in the public domain. Public companies report financial information as consolidated businesses, and US companies with international alliances include US statistics with their global business statistics.

II.2. Economic profile of manufacturing

Each of the four major industry segments—flat glass, container glass, fiberglass, and specialty glasses—faces different problems that defy simple solutions. Each segment requires different technologies for different products, hampering the identification of common scientific research needs and marketing. As each segment could be considered a separate industry, the lack of process standardization, and the identification of common problems becomes more problematic.

An energy and environmental assessment by the Department of Energy–Office of Industrial Technologies (DOE/OIT) in April, 2002, concluded that, in many of its markets "...the glass industry has been challenged with plant overcapacity, increasing foreign trade and imports, capital intensiveness, rising costs for environmental compliance, and cyclical and moderate growth prospects."

A major regional producer, the United States ships glass products valued at $28 billion per year throughout the world. Over the last 20 years, the annual compound growth rates of glass manufacturing have slowed to 4 to 6 percent. Annual growth is projected to slow to 2 to 3 percent within the next decade. Growth in all the major segments is slowing with the exception of the specialty glass sector.

Competition has become more intense in some segments with a continuous challenge to monitor the balance of supply and demand and to adjust industry capacity rather than lower prices and reduce profitability to fill unneeded capacity. Some segments are threatened by low-cost imports and the substitution of other materials, as in the container industry, which is threatened by widespread use of plastics and aluminum. Nevertheless, most segments of the industry have maintained reasonable operating margins excluding depreciation at the relatively benign rate of 10 to 20 percent return on sales and have generated positive cash flow. However, the capital intensity of the business has made it struggle to generate a return on capital at a rate that exceeds capital costs.

As in most heavy manufacturing industries, investors are not readily attracted to the glass industry because of the serious problems that it faces: high capital-intensity; rising energy costs; stringent environmental regulations; competition from other materials; competition from manufacturers in low cost producing regions; and cyclical and moderate growth prospects.
The most serious financial challenge to today's glass industry is to improve capital productivity, an issue that has become more serious over the last 10 years. Many companies have adopted a form of shareholder value-added metric, a business performance metric that subtracts from profit a charge for the cost of all the capital the company employs. This capital charge is a form of opportunity cost, which is associated with tying up capital that could be used elsewhere to earn an acceptable return at comparable risk. When an expected return on invested capital fails to exceed the corporation's cost of capital target, attracting capital to grow or sustain business becomes difficult.

Future profits from glass manufacturing depend on four factors identified in this study:
• proper management of facility assets and operational costs;
• ability to increase capital productivity;
• balancing demand for glass products with production capacity in all segments;
• create innovative new products with higher margins.

Glass products are primarily a commodity product and as such have followed the classic commodity business model where each manufacturer tries to slash costs to become the low cost provider of product. This headlong rush to be the dominant supplier has caused many companies within the industry to reduce costs and eliminate needed staff functions like research and development (R&D). The scaling back of this essential R&D function has unfortunately cut back on the amount of innovation available to the industry. However, it allowed the industry to survive economically but without the vitality it once had.

There have always been exceptions to generalizations, and the glass industry is no different. A few glass companies, notably in the specialty glass segment and some even in the other more commodity segments, had the foresight to differentiate their products, maintain their R&D, and

survive by innovating new products. These companies are among the most economically successful in the industry today, as profit margins were maintained to continue reinvestment.

Most companies, however, were not so fortunate and continued to execute the commodity business model. Amid severe industry consolidation, the survivors remained very protective of their "proprietary" technology and there continues to be little collaboration within the industry. Anti-trust concerns added to the disincentives to collaborate. Historically, the glass industry was under intense anti-trust scrutiny by the US Department of Justice from the late 1950s through the early 1970s. Because of this, most glass companies are very leery of collaborating on anything.

For collaboration on technical matters among glass industry manufacturers in the four segments, technical areas were identified under DOE auspices where no product differentiation is present, such as more efficient production methods, improvements in yield in glass fabrication; and cost-effective solutions to environmental problems and regulations. Without major advances in glass melting technology, glass manufacturing will continue to shrink as US firms seek to set up manufacturing in regions of the world where labor and capital costs are lower and environmental regulations are less stringent.

With regard to glass melting, eight major issues were defined.
• Capital and operating costs required to meet competition of other materials and imported products can often be justified.
• Energy-saving measures are taken only in relation to net cost savings.
• Higher operating costs might be acceptable to realize increased capital productivity.
• Technical and economic horizons for the glass industry are short term.
• All glass segments are adverse to both technical and economic risks.
• Melting concerns, particularly environmental issues, are common to most glass manufacturers, but collaboration within the industry is limited because of anti-trust concerns.
• Significant consortium interest in a large-scale melting initiative is essential.
• If the industry had a clearer view of future energy, capital and environmental costs, it would be more motivated to revise melting practices, develop innovative melting technology, and collaborate for economies of scale.

Capital investment required by the glass business remains high, compared to other materials such as plastics extrusion and molding, which generate several dollars of annual sales per capital-invested dollar. Investors interested in rapid sales growth with smaller capital requirements often find "conversion" businesses more attractive than the traditional glass process business. Industry profitability and attractiveness to capital investment depend on market growth and size as well as on the five competitive forces described by Porter: hostility of established competitors; new entrants into the industry segment; suppliers; buyers; and substitute products. (Michael Porter, "Competitive Strategy")

II.3. Characteristics of glassmaking

Because of the complex and paradoxical nature of glassmaking, categorization is difficult. The industry is mature, yet not standardized. As a process industry, glassmaking adds high value to a low-cost raw material. Although it is an advanced manufacturing technology, glass melting

continues to operate using technology based on conventional furnace designs that were developed over almost a century and a half ago.

Mature industry

Glassmaking is America's oldest manufacturing industry, begun in the colonial forests near Jamestown, Virginia, in 1608. Therefore, in economic terms, the glass industry is considered a mature industry, yet it lacks the expected degree of standardization and common interests that characterize a mature industry. Price and cost pressures are characteristic of high-volume, commodity sales within the glass industry; however, it does not have standardized technology and manufacturing operations. Mature industries are unwilling to make significant changes to their principle manufacturing processes, due to the high investments involved. The existing glassmaking technologies have generally evolved over an extended period of time among a small community of practitioners with little tolerance for risk.

Industry segmentation

Given the segmentation of the glass industry, US glassmakers are challenged by very different markets and products and do not share common concerns for operations and production. As a whole, the industry is weakened by this fragmentation, which hampers collaboration that would empower the industry as a whole with economies of scale. Each segment, and even individual companies within a segment, usually operates with several different furnace designs and with a variety of melting technologies, weakening its collective position.

Even though the common public perception of glass is that of a single material with a common chemical composition, this is not true. The unique product requirements of each segment require technology specific to the glass chemistries that define the physical properties of their products and applications. Different melting technologies are sometimes used within each segment. Raw materials differ from segment to segment, as do requirements for product quality and metrics for quality measurement. To be compatible with the most productive fabrication processes of their particular glass products, manufacturers require other properties, usually temperature versus viscosity and coefficient of thermal expansion but can include a number of very different parameters. Furnaces differ in size and employ different melting technologies, therefore, requiring different capital and varying operating costs.

Although the segments vary in the technology used and in the products they manufacture, the basic melting process is generally the same. All glass manufacturers employ melting technology that involves high-temperature fluxing of silica sand with a variety of industrial minerals to produce a particular glass composition. The industry segments share common concerns: purchase of batch materials, purchase of energy, and melting of batch and cullet. In addition, they share an ongoing need for capital to rebuild furnaces and maintain operations. Table II.1 defines glass industry segment by end-use markets.

Table II.1. Key End-Use Markets by Segment

SEGMENT	KEY END-USE MARKETS
Flat glass	Automotive, transportation/aviation, construction/architecture, furniture
Container glass	Consumer markets: beer, wine, liquor, food, cosmetics, medical/health, household chemicals
Glass fiber	Construction (insulation, roofing, panels), reinforced composites, structural components (transportation, electronics, marine, infrastructure, wind energy)
Specialty	Tableware, cookware, lighting, laboratory equipment, instruments, Electronics, displays, optical communications, biological materials, radomes, ophthalmic, medical, photoelectric, and industrial applications
Products from purchased glass	Aquariums, tabletops, mirrors, ornaments, art glass, window assemblies

Process business

The glass industry is an extreme example of what is termed a "process" business. Glass manufacturing adds value to a low-cost raw material but at a high cost of energy, technology and capital. In a high-volume glass business, the purchased raw material is typically less than 25 percent of the total manufactured cost of the product and less than 15 percent of the selling price. The cost of raw materials for glass containers may be 13 percent while color TV tubes might be 45 percent of the cost to manufacture as an example. By contrast, in a conversion business, the purchased raw material cost is 40 to 50 percent of sales; in fabrication or assembly businesses, raw materials are 60 to 70 percent of sales value.

Generally, value is added to the low-cost raw material, sand, with processing technology and exceptionally high level of capital to build and maintain facilities. Cost of energy is a major factor in adding value to the low-cost raw material. Direct labor costs add cost to the final glass product more so in the United States than in offshore manufacturing plants where labor and cost of manufacturing are cheaper. However, shipping costs due to the weight of most glass products may limit where plants can be located. Freight, labor, sales and administrative costs, corporate overhead, research costs, and profit add to the value equation to contribute to the selling price.

No one cost component dominates production of glass products. Costs are distributed among the cost categories, making it difficult to reduce production costs. No single cost can be isolated and addressed in a way that impacts overall production costs. (See Table II.2 Estimated Cost of Manufacture by Cost Component (%)).

Table II.2. Estimated Cost of Manufacturing Process by Cost Component (%)

COST ELEMENT	Container I	Container II	Fiber I	Fiber II	Flat I	CTV I	TV Panel
Raw material	13	13	25*	21*	25	45	22
Energy	8	13	11	15	24	15	9
Direct labor	29	40	11	31	15	8	38
Other variables	13	11	20	9			
Fixed costs, including depreciation	37	23	33	24	36	32	31
Total manufactured cost	100	100	100	100	100	100	100

*Includes chemical size and binder costs

Based on the "Energy and Environmental Profile of the US Glass Industry" prepared for the DOE, melting and refining accounts for only 41 to 66 percent of the energy used to make glass.

The percentage used for batch melting and refining combined increases 45 to 71 percent of the total fossil fuel and electric energy when average batch preparation energy is added. Only 7 to 15 percent of the manufacturing cost can be attributed to energy use in the melting and refining process stages. These process stages are rarely the highest priority for cost reduction by an individual glass producer or a specific glass plant. The use of energy by process stage shown in Table II.3 illustrates the difficulty in targeting a single area for cost reduction.

Table II.3. Energy by Process Stage

	Flat		Container		Fiber		Pressed/blown	
Process Stage	**mmBtu/ton**	**%**	**mmBtu/ton**	**%**	**mmBtu/ton**	**%**	**mmBtu/ton**	**%**
Batch preparation	0.68	5.2	0.68	5.6	0.68	3.4	0.68	4.2
Melting/refining	8.60	66.3	5.50	45.7	8.40	41.6	7.30	44.8
Subtotal	**9.28**	**71.5**	**6.18**	**51.3**	**9.08**	**45.0**	**7.98**	**49.0**
Forming	1.50	11.6	4.00	33.2	7.20	35.7	5.30	32.6
Post-forming	2.20	16.9	1.86	15.5	3.90	19.3	3.00	18.4
Total	12.98	100.0	12.04	100.0	20.18	100.0	16.28	100.0

Source: "Energy and Environmental Profile of the U.S. Glass Industry," Table 1.2 prepared for the U.S. Department of Energy by Energetics, April 2002.

II.4. Economic stimuli for innovations in melting

The three strongest stimuli for technical innovation in glass melting are the need for increased capital productivity, greater energy efficiency, and environmental regulation compliance. Interest in advancing technology for heat recovery and reuse to preheat batch and cullet was strong in the early 1980s, following the energy crisis of the 1970s. However, these projects were curtailed by limited R& D funds and relatively long payback periods for the investments.

Aversion to risk has created an environment in which glassmakers prefer incremental, evolutionary improvements to bold, revolutionary technology. The capital costs of building and rebuilding plants are high and margin for error is low. The economies of scale for the container, fiber, and flat glass sectors dictate very large melters that demand large capital investments. Manufacturers recognize that the consequences of failure of new melting technology would be severe and the cost of correcting problems would be a financial liability. Technology failures would impact not only immediate production and sales but also the reputation of a company. Managers make decisions about glass melting furnace technology very conservatively in an economic climate where perceived risks outweigh potential rewards.

Industrial leaders are also skeptical of vendors' claims for the advantages of new melting technologies. As many new technologies are proposed by suppliers to the industry, only a few have lived up to their sales claims, which reinforces this attitude. However, in truth unfortunately, much of the real innovation within the industry is actually coming from the vendor community. The reductions in R&D investments within the container, flat, and fiber segments of the industry have made major technical improvements very difficult to implement due to cost constraints. The prevailing business philosophy has been to exploit the "cash cow" businesses to fund more lucrative business opportunities in other than commodity products.

Therefore, technological improvements in traditional glassmaking have been evolutionary, rather than revolutionary, in the areas of combustion, refractories, raw materials, glass forming, processing control, and product and application development. New technologies are needed to achieve high-energy efficiency and high product quality by scaling down the size of melting furnaces. If low-pressure bubble-removing technologies and homogenizing technologies using stirrers can be implemented at lower temperatures and combined, a high-quality glass should be obtainable and furnaces could be designed with a higher-energy efficiency on a smaller scale. Low-temperature melting or use of other materials would control corrosion of refractory materials and extend the life of the furnace. Scaling down furnaces while keeping the same economies of scale would have a long-term effect of reducing equipment, natural resource deployment, and exhaust gases, as well as reducing scrap when the furnace is dismantled. Melting technologies are needed that will extend refractory life, improve melt injection, employ more cooling technology, and facilitate partial repair of hot furnaces.

Limited funding for research and development due to small profit margins and low growth rates is a major economic barrier to development of new melting technologies. Currently, R&D investments have short-term goals and are narrowly focused on projects that lead to new products with a higher profit margin potential. Garnering support for a large, collaborative project that focuses on glass melting is challenged by the lack of common objectives within the segmented industry and competition among individual companies. Vendors will continue to lead development efforts for new melting technologies unless industry champions step forward to guide the effort. The new Submerged Combustion Melter Project is a notable exception to this disturbing situation, and pioneers a much-anticipated effort by the glass industry. (See Section Two, Chapter 3.)

For the glass industry to improve melting technology in the US, many companies within the glass industry must unite to collaborate, as the capital requirements for such research will be beyond the means of any single company. They must place the highest priority on maximizing their collective financial resources, energy and expertise, to minimize melting costs and resolve these challenges simultaneously at low risk. If the financial parameters of emerging revolutionary technologies were to be assessed in light of the financial parameters of current technology, capital investments might be justified. Rejuvenation needs to be a priority of this basic industry.

II.5. Marketing statistics and trends

Over the past several years, the compound annual growth rate (CAGR) of the total glass industry has slowed to less than 1 percent, reflecting the downturn in the US economy in 2001. Future projected growth rate in a more normal economy is a modest 2 to 3 percent. Although furnace rebuilds and improvements require considerable and continuous capital, the glass business generates excellent cash flow in a company's portfolio of businesses.

Consolidation of markets and producers

Much like the overall US economy, especially in the basic commodity markets, glass industry sales are dominated by large, low-cost producers, which essentially squeeze out smaller, less-efficient competitors. This glass industry consolidation has matched the consolidation within the distribution and retail markets that are the major outlets for glass products. This trend towards

having fewer producers of major commodity glass products within all sectors of the glass industry is expected to continue. The lowest cost producer within any commodity product will gradually force the less efficient suppliers out of the glass business.

As buyers and sellers both consolidate, glass manufacturers may have more opportunity to increase processing capacity to improve profitability. By maximizing output from existing furnaces, glass manufacturers have attempted aggressively to expand production, or to replace production from obsolete or closed plants. Current capital requirements to operate a glassmaking facility are 7 to 10 percent of sales—a serious financial challenge to the glass industry. The consolidation of both production and distribution has resulted in an industry in which traditional segments operate largely as independent oligopolies (defined as a few producers supplying product that each can influence price, with or without agreement between them). Other specialty glass markets, being so diverse, are not shown for the sake of simplicity. (See Table II.4 Industry Segment Concentration.)

Table II.4. Industry Segment Concentration

	Number of companies equal to 90+% of market
Flat	5
Container	3
Glass fiber insulation	5
Glass fiber reinforcement	4
Specialty glass tableware	5
Specialty lighting	3
TV	4

II.6. Marketing trends by segment

The current economic state of the US glass industry as a whole is mixed, depending on many marketing factors within the four individual manufacturing segments of glass products. With improved sales in 2002, the container industry experienced one of its best fiscal years in recent history. However, the flat glass industry was down 12 percent in sales in 2002 due to the weak US commercial construction sector. Glass sales in the textile sub-segment were down 27 percent. The specialty glass segment, composed of a number of very varied sub-segments, is the largest dollar segment for consumer and industrial markets. Here, glass shipments decreased 31.1 percent from 2001 to 2002 as the technology markets collapsed where most of these products were used. Yet, in spite of multiple setbacks, most segments of the industry have maintained reasonable operating margins and generate positive cash flow. (See Table II.5.)

Table II.5. Trend in value of glass products shipped 1997–2001 ($ million)

Sector	**1997**	**1998**	**1999**	**2000**	**2001**	**CAGR (%) 1997–2001**
Flat	**2669**	**2607**	**2694**	**2869**	**2585**	**–0.8**
Container	**4176**	**4189**	**4190**	**4106**	**4209**	**+0.2**
Pressed/blown	**5921**	**5937**	**5477**	**54.71**	**5062**	**–3.8**
Mineral wool	**4277**	**4299**	**4480**	**4535**	**4526**	**+1.4**
Purchased glass products	**9699**	**9778**	**10,698**	**11,708**	**11,188**	**+3.6**
Industry totals	**26,743**	**26,810**	**27,539**	**28,689**	**27,570**	**+0.8**

(Source: US Census Bureau Annual Survey of Manufacturers; www.ita.gov/td/industry)

Container glass
The glass container segment experienced one of its best years in a decade in 2002, but it has become more dependent on bottles for alcoholic beverages. The trend in glass container shipments by end-use markets shows use for beer bottles up by 2.8 percent and for wine bottles up by 1.5 percent. In 2001, beer accounted for over 50 percent of container shipments. During the last decade, glass container shipments for beer grew at an annual compound rate of 4 percent. Glass containers are recognized for their properties of hermeticity, clarity, aesthetics and hygienic features, but weight and brittleness limit the market uses of glass containers and allow plastics substitution.

More than half of the container glass plants have been closed in the US over the last 20 years. With industry consolidation, the glass container industry is dominated by three producers: Owen-Illinois (Owens-Brockway) [44 % of market share with 19 plants], Saint Gobain Containers (Ball-Foster) [32% of market share with 18 plants], and Anchor Glass Containers [20 percent of market share with 9 plants]. Barely over 40 percent of the US glass container plants operating in 1979 are in operation today.

With annual capital requirements of 8 to 10 percent of sales in the container industry, capital intensity remains a challenge and the threat of substitution by plastics or aluminum cans is ever present. Container glass shipments in 2000 and 2001 were valued at 9-million short tons of glass. Units shipped in 2000 were down by 25 percent over units shipped in 1980. This decline reflected competition from substitute materials like aluminum and plastics for food, non-alcoholic beverages, and medical and health packaging.

The Beverage Marketing Corporation and the Beer Institute estimate that 45 percent of beer sold in 2001 was packaged in glass, up from 32 percent in 1991. Beer, wine, liquor, and ready-to-drink alcoholic coolers comprised 64 percent of shipments in 2001, making alcoholic beverages the most significant market for glass containers. Substitution of plastics for glass in packaging of milk and soft drinks is well advanced. Plastics are also beginning to be used for new food applications such as condiments, baby food, and single-serving fruit juice containers. A market study in 2001 by the Freedonia Group indicated that glass containers would be challenged by substitute materials for food applications. ("Food Containers to 2005," Freedonia 2001)

Opportunities for future growth in the container segment appear best in markets and manufacturing facilities outside the United States. Imports of glass containers at 11 percent of apparent consumption are a greater factor than exports of 3 to 4 percent of US manufacturers' shipments. Year-to-date shipments of glass containers through August 2002 were nearly 3.5 percent ahead of shipments in 2001. Industry management of capacity and the closing of higher-cost plants have improved the balance between demand and supply. (See Table II.6 Trends in Container Glass Shipments.)

Table II.6. Trends in Container Glass Shipments

Year	Shipments (1000s of gross=144,000 units)	Value ($ billion)
1980	327,972	4.5
1985	273,695	4.6
1990	289,704	4.9
1995	269,289	4.0
2000	246,536	4.1

Flat glass

Forecasters predict an annual growth rate of 2 to 3 percent a year for flat glass in the US over the next several years, due to the trend toward larger homes with greater window area, multi-pane insulating windows, and vehicles such as SUVs with more glass per vehicle. But the industry's ability to generate capital and maintain the profit margin needed for research and development efforts is not secure. Flat glass volume was down 12 percent in 2000 due to a weak commercial construction sector. Shipments of flat glass from US manufacturing plants were valued at $2.9 billion in 2000 and $2.6 billion in 2001. Overall, flat glass demand of 6 billion ft^2 is driven by three markets: construction, motor vehicles, and specialty flat glass products. Production grew at an annual compound growth rate of 3.25 percent in tonnage and 3.6 percent in square feet during the 20-year period from 1980 to 2000. Production of flat glass increased by 47 percent during the last 20 years of the 20th century.

From 1997 to 2001, growth in flat glass slowed. The annual compound growth rate of this segment of the industry is currently 1.6 percent in tonnage and 1.25 percent in square footage. Decline in value, shipment weight, and square footage of flat glass products in 2001 reflect the difficulties in the US economy. While the residential building market has maintained some strength with lower mortgage interest rates and strong remodeling activity, commercial construction and automotive markets have declined.

In terms of value, the US is the world's largest importer and exporter of both unprocessed and processed flat glass, according to a World Glass File Study (DMG World Media, 2002). Imports represent about 23 percent of the apparent consumption of flat glass in the US, while export value is 28 percent of the value of flat glass shipments. Canada receives the largest percentage of US flat glass exports, while Mexico supplies the largest percentage of imported flat glass. However, the greatest growth in the flat glass market is expected to be outside the US, particularly in the rapidly growing markets of China, the Pacific Rim and Eastern Europe.

Given the application demands for flat glass performance, substitute materials such as plastic are not expected to become a competitive factor. The power of suppliers to raise costs is expected to remain relatively low and new competitors are not expected to enter this capital-intensive business. Technology development in the US is being directed more toward improved coatings, surface treatments and fabrication processes than toward basic melt processing. The glass industry is not highly attractive to capital investors because expectations and the struggle to earn an attractive enough rate of return on capital will be challenging. (See Table II.7 for trends in US flat glass production from 1980 to 2000.)

Table II.7. US Flat Glass Production 1980 to 2000

Year	Short tons (thousands)	Square feet (millions)
1980	2945.7	3293.4
1985	3670.7	4129.8
1990	4080.8	4737.1
1995	4437.5	5635.3
2000	5618.0	6677.2

Fiberglass: Insulation
The health of the economy affects the demand for glass fiber insulation, as reflected by building and construction, the major markets for insulating materials. The 35 percent increase in new home size since 1985 has positively affected the demand for insulation, and relatively low mortgage rates over the last several years have led to a robust building cycle and remodeling activity. The glass fiber insulation industry sold 3.8 billion pounds of product valued at $2.9 billion in the year 2000. Consumers prefer glass fiber to other insulating materials because of the material's attributes and attractive price.

Residential construction represented 71 percent of the demand for glass fiber insulation in 2000. Of this market, new housing starts accounted for 56 percent, replacement and remodeling 23 percent, and attic re-insulation 19 percent. Replacement and remodeling is an important growth segment for glass fiber insulation. Overall demand for glass fiber, by the slowing residential construction market is expected to grow by only 1.4 percent per year by 2005, a sharp deceleration from the 4 percent pace from 1995 to 2000.

Energy costs, and expectations for future energy costs, also affect the demand for insulation materials. Concern over US dependence on foreign sources of fuel may influence decisions about energy conservation—and demand for insulation material. Insulation levels have increased for buildings from R-11 to R-13, and in attics from R-19 to R-30; generally, better performing building components are used in new construction. However, one study shows that consumers are willing to add only $3,000 worth of up-front costs in building a home to save as much as $1,000 a year in utility costs. (National Association of Home Builders Survey of Consumer Preferences, 1996)

Production of glass fiber for insulation is capital intensive and requires particular technology, not only in the glass melting area but also in the glass delivery, fiber forming, and downstream fiber handling steps of the process. Five companies produce all the glass fiber insulation in the US and share 95 percent of the market. The difficulty of producing fiberglass does limit new entrants into the field. However, two new competitors did join this industry segment after the second US energy crisis in 1977 and have increased industry capacity. Pricing and profitability of glass fiber insulation have been affected by two major competitive forces: industry capacity utilization (demand-supply balance) and consolidation in channels to market (increased buyer power). With consolidation of the insulation channels to market through such big box retailers as Home Depot and Lowes, the power of buyers has increased in do-it-yourself retail sales. Wholesale distributors to professional construction buyers have also consolidated, but at a slower rate. Cameron-Ashley acquired smaller local and regional distributors before being acquired itself by Guardian Industries. Insulation contractors have also consolidated; for example, Gale Insulation consolidated smaller contractors and then was acquired by Masco.

The increasing power of buyers suggests that sales channel alignment and distribution costs are important, given the bulky nature of the products. The impact of substitute materials on sales has been limited. Cellulose insulation struggled with issues of fire performance, volatility in costs related to waste paper markets, the availability of glass fiber insulation, and credibility with customers as an industry of smaller regional producers. Plastic foams compete directly with

glass fiber in some applications and markets, particularly foam board products in commercial and industrial market segments. (See Table II.8.)

Table II.8. Glass Fiber Insulation Demand by Market 1990-2010

Item	1990	1995	2000	2005	2010
Glass fiber wool demand (million lb.)	2756	3088	3764	4010	4495
Residential construction	1836	2195	2662	2860	3240
Nonresidential construction	505	471	628	640	685
Industrial and equipment	327	333	383	420	480
Appliances and other	88	89	91	90	90
Price ($/lb)	0.66	0.70	0.78	0.84	0.91
Glass wool fiber demand ($ million)	1832	2156	2944	3380	4100

Source: Freedonia Market Study

Fiberglass: Textiles/reinforcements

Textile glass fiber sales were down 27 percent in the year 2000. The demand for textile glass fiber in the US in 2000 was valued at $2.4 billion. Industry growth slowed in late 2001 and 2002, but textile glass fiber has been one of the growth segments in the glass. Demand for textile fiber is projected to rise 2.5 to 3 percent annually for the next several years, but the textile fiber business is cyclical and greatly affected by economic trends.

Fiberglass yarn sales were down substantially in relation to the sharp drop in the electronics market, especially decline in printed circuit boards for computers. Glass yarn products are used to reinforce laminates used in printed circuit boards in electronic components. Fiberglass volume declined 24 percent as electronics volume fell 32 percent. Recent economic difficulties in electrical and electronic end-use markets also resulted in a decline in glass yarn sales in 2002. Four major producers hold 65 percent of the market share. ("Glass Fibers to 2005," Freedonia Group, June 2001)

Building products and automotive applications are projected to remain the leading applications of glass reinforcements. Reinforced plastics represent 45 to 55 percent of usage. Asphalt roofing shingles are the next highest application with 95 percent of asphalt roofing shingles produced with glass mats. The market for glass fiber mats made from wet chopped glass fibers began to grow in the late 1970s when they were substituted for organic felt mats to provide longer shingle life and better fire performance, and when the price of asphalt was escalating rapidly. The growth of the glass fiber industry to produce asphalt shingles is expected to continue with the growth of laminated shingles that require more glass.

Glass fiber for reinforcement is cost effective and has attractive mechanical properties, although it is a relatively heavy product. Where weight is important and high strength, or high modulus, is needed, higher performance carbon and aramid fibers compete with glass fibers in selective niche applications. However, the price of these higher performance fibers, at $10/lb. or more compared to $1/lb. or less for glass fiber, limits their use as substitutes.

Specialty glass: Tableware, lighting and electronic glass

The specialty glass segment is composed of a number of variant sub-segments: table, kitchen, art and novelty glassware; lighting, television tube blanks, and electronics-related glassware; and

scientific glassware, glass tubing, and other technical and industrial glassware. When viewed as a single segment, specialty glass, tracked by the US Census Bureau as "consumer, scientific, technical, and industrial glassware," is the largest dollar value segment in US consumer and industrial markets.

Total factory shipments of specialty glassware amounted to $5.2 billion in 2001, a 13.1 percent decrease from the $5.9 billion reported in the year 2000. Within the specialty glass business, some sub-segments have been affected by the slowdown in the US economy or increasingly threatened by imports, while others with niche markets have been less affected by economic and competitive forces.

Consumer-related glassware grew at an annual compound rate of only 0.4 percent over the last five years, while lighting and electronic glassware declined at an annual rate of 5.4 percent for the same period. Consumer glassware (table, kitchen, art and novelty) declined 9.5 percent in value from $2,031.5 million in 2000 to $1,838.1 million in 2001; lighting and electronic glassware decreased 20.9 percent from 2000 to 2001. (Census Industrial Report, August 2002)

Imported glassware has affected sales in the US specialty glassware market. Imports account for more than 40 percent of apparent consumption; exports are only 10 to 11 percent of manufacturers' shipments of consumer glassware. In the lamp chimney, bowl, and globe sub-segment and in the CRT blanks and parts, imports are an important factor.

The US fiber optics business experienced a sharp decline from 2000 to 2001 with a severe drop in global demand and reductions in capital spending by the telecommunications companies. Foreign competition has also increased in the fiber optics industry.

The decline in sales of TV tubes and blanks reflects changes in trade with Mexico and the decision of some manufacturers to move production outside the US. The decline also reflects a sluggish US economy and changing demand for consumer television products. For the long-term trend of the two major sub-segments of the specialty glass segment, see Table II.9 that describes US Value of Shipments for the last two decades of the 20th century.

Table II.9. US Value of Glass Shipments

Year	Table, kitchen, art, and novelty glassware ($ millions)	Lighting and electronic glassware ($ millions)
1981	1149.8	810.0
1986	1277.6	953.3
1991	1433.6	1187.1
1996	1805.4	1620.3
2001	1838.1	1226.5

II.7. Economics of glass melting

Capital productivity has been one of the most significant issues in the US glass industry in recent years. As a process business, glassmaking is capital intensive, as measured by the capital investment needed to generate $1 of annual sales. New glass plants generate less than $1 of annual sales per capital investment dollar.

With the high capital cost of new glass plants and space constraints in existing facilities, glass manufacturers have focused their efforts on increasing the production capacity of existing furnaces. When market conditions demand additional production capacity, incremental production from existing facilities is the most capital-efficient solution to meet market demand. Glass manufacturers have aggressively pursued productivity gains increasing output from their existing furnaces. Because few new glass plants have been built in the US in the last several years and a number of plants have been closed, maximizing production of existing furnaces is essential.

Because of the large capital investment in melting furnaces, many efforts are made during production to extend their useful lives. The need for capital investment for furnace replacement or rebuild is deferred as long as possible, at least until quality, safety, or production demands are compromised. Boosting with electricity or oxygen firing to increase production may increase melting cost per ton of glass, but manufacturers accept these conditions because additional capacity is gained at a much lower capital cost than could be required to build new furnaces. Operators often accept some deterioration in production capacity and reduced energy efficiency while extending the furnace life, but the risk of catastrophic failures and unplanned production outages can affect the ability to meet their commitments to customers.

Glass businesses need large capital investment and ongoing infusions of capital for periodic rebuilds and new plant construction. In the past, some glass companies set up an accounting "reserve for furnace rebuilds" to accrue funds for expected furnace rebuilds. But this accounting practice has been largely abandoned since an IRS rule was revised in the 1980s to penalize accruing of funds from current operations for future rebuilds. (See Table II.10 for cost of melter rebuilds by segment.)

Table II.10. Melter Rebuild Cost by Glass Industry Segment

Glass segment	Typical melter size (ton/day)	Cost of a new line ($ million)	Melter rebuild cost ($ million)	Melter repair cost as a % of typical refurbishing project
Container	300	75	8–12	25+%
Glass fiber	150	100	1–10	15–50%
Flat	600	160	25	25–30+%

Capital costs

The cost of capital, or hurdle rate, used to evaluate financial investments in the glass business was surveyed in the course of this study with the response rate that ranged from 10 to 20 percent. A number of companies used a risk-adjusted rate for investments in unproven technology. Financial managers expect glass businesses to earn a return on capital that exceeds the corporation's cost of capital. Capital-related charges, taken as depreciation of manufacture, do not account fully for the capital cost associated with process businesses like glassmaking, according to the financial metrics used by many public companies today.

The huge physical footprint of glass furnaces accounts for the capital-intensive nature of the glass business. This space requirement has been a major barrier to rapid growth. Smaller furnaces, although less energy efficient and more expensive to build per unit of glass produced, can be an acceptable alternative to large furnaces. The smaller furnace is more flexible in

meeting business cycle demands and rebuild time is short. The use of colorant fore hearths is another attempt to gain more flexibility and greater capital productivity. Smaller-volume electric melters, such as the Pochet melter, have a much shorter life, but can be rebuilt in less time and at a much lower cost.

Production costs

The financial picture of glass production can be greatly affected by site-specific factors, such as prevailing energy costs, product quality requirements, available space, costs of alternative abatement measurements, prevailing legislation, ease of operation, and the anticipated operating life of alternative furnaces. In regions where the difference between the cost of fossil fuel and electricity is at the upper end of the range given, electric melting may be a less attractive option. To influence glass-manufacturing costs, any new melting technology must reduce both energy needed for melting and amortized furnace costs. Avoiding or reducing costs of air emissions controls can substantially reduce operating costs.

Conventional glass melters reflect industry segment and site-specific differences that contribute to the net cost of delivering glass to a production-forming operation. The cost of producing glass comes from costs of raw material freight, purchased cullet, energy (natural gas, oil, electricity), and furnace construction design. Container batch costs, for example, are typically $38 to 65 per ton as compared to wool fiberglass batch costs of $90 to 110 per ton. Furnace energy and rebuild costs can vary even more broadly. Operation costs of some all-electric melters can exceed $55 per ton, and amortized furnace costs can be as much as $10 per ton. (See Table II.11 as an example of accumulated costs in the container glass segment.)

Table II.11. Direct Costs of Molten Container Glass Delivered to Fabricator

	Average ($/ton)	Range ($/ton)
Batch raw material costs	50.00	38–65
Batching labor operations	1.50	0.75–3.00
Amortized batching equipment	1.00	0.25–2.50
Amortized furnace equipment	6.00	2.50–8.00
Melting energy costs	25.00	16.00–35.00
Melting labor operations	1.50	0.75–3.00
Particulate emission control	1.00	0.25–4.00
Total molten container glass cost delivered to fabricator	86.00	

Feasibility of electric furnaces

Electric furnaces have much lower capital costs than conventional furnaces, which when annualized partially compensate for their higher operating costs. Electric furnaces have shorter campaign lives and may require rebuild or repair in two to six years, compared to five to 14 years for conventional furnaces. For small air-fuel conventional furnaces (up to about 100 tpd), heat losses are relatively high compared to larger furnaces. In the range of 15 to 100 tpd, electric furnaces have lower heat losses than air-fuel furnaces. Electric furnaces are thermally efficient, two to four times better than air-fuel furnaces, and can be more competitive than air-fueled furnaces.

The economic viability of electric melting depends on the price differential between electricity and fossil fuels. At present, average electricity cost per-unit-energy is two to three times the cost of fossil fuels. While electricity costs can vary up to 100 percent from region to region, fossil fuel prices tend to show less difference because of wellhead purchasing.

Based on current practice, the following guide indicates size of electrical furnace suitable for continuous operations.
• Furnaces below 75 tpd are generally viable.
• Furnaces in the range of 75 to 150 tpd may be viable in some circumstances.
• Furnaces greater than 150 tpd are generally unlikely to be viable.

Labor costs
Labor costs for glass manufacturing in the US are known to be higher than in facilities operating in other countries. In 2000, the glass industry employed 145,279 people in production, management, business, sales, engineering, maintenance, construction, and operations combined. The mean annual wage totaled $4.5 billion. (US Department of Labor, Bureau of Labor Statistics) Government statistics are categorized under the headings of "flat glass, glass and glassware, glass products made of purchased glass." Flat glass paid wages totaling ~$421 million to ~13,000 employees, who represented 9 percent of the US glass workforce. Glass and glassware (pressed or blown) paid wages totaling ~$2.2 billion and employed 47 percent of the US glass workforce. Glass products made of purchased glass paid wages totaling $1.9 billion and employed 44 percent of the US glass workforce.

II.8. Return on capital investment
While glass businesses continue to generate cash and earn a relatively attractive rate of return on sales, they struggle to generate a return on capital that exceeds their capital costs. Since glass businesses need significant initial capital and ongoing infusions of capital for periodic furnace rebuilds, sustained performance in the shareholder value-added metric is a particular challenge. To attract the capital needed to grow or sustain business is difficult when expected return on capital invested fails to exceed the corporation's cost-of-capital target. Therefore, glass businesses must devise means to earn the cost of capital as well as meet the corporation's tolerance for risk.

Most glass companies expect a short-term payback of one to two years on capital investments. The capital budgeting process has favored lower capital intensity rather than the traditional high requirements of the glass businesses. Initial investment in a new glass plant ranges from $75 to 160 million, depending on the glass product manufactured. These estimates include site development, building, batch house, structural steel work, utility services, environmental hardware, and furnace and fabrication equipment. Much of the capital is for long-lived items that depreciate over 20 to 30 years. The furnace has a shorter life and must be rebuilt at the end of its useful life, which varies according to glass composition, type of refractory used in construction, and operating factors such as quantity of glass produced per year. Furnace rebuild cost is amortized over the expected life of the furnace, which is typically five to 14 years for traditional large-volume glass products.

When a glass corporation operates a large number of furnaces, capital needed in any given year just to rebuild furnaces at the end of a campaign can represent a major portion of capital available to the business. Production lines are refurbished while the furnace undergoes a cold repair, and the cost of repairing the furnace represents a portion of the business's reinvestment capital.

Capital requirements for glass facilities are currently 7 to 10 percent of industry-wide sales. For a public corporation, cost of capital is a function of financial structure and the balance of debt and equity on the balance sheet. In general, a higher debt portion of capital yields a lower cost of capital, but many US companies continue to prefer a capital structure with relatively low debt. Cost of capital in US glass companies also depends on the volatility of the company's stock price relative to the broad US market (the stock's beta). A discounted cash flow (DCF) analysis may be conducted to focus on cash generated by the investment for each year of its economic life, recognizing the time value of money. Cash received in earlier years of operation has greater value, or rather is discounted less, than cash received in later years. The DCF analysis uses a discount rate that is the corporation's cost of capital, or some risk-adjusted higher rate than the cost of capital, to account for risk. US companies report a cost of capital in the 10 to 12 percent range and may use a risk-adjusted rate as high as 20 percent.

Since the most serious financial challenge for the industry over the last decade has been the need to continue to improve capital productivity, companies have adopted some form of shareholder value-added metric (SVA, EVA, or residual value). This performance metric differs from most others in that it subtracts the cost of all the capital a company employs from the profit in the form of an opportunity cost associated with tying up capital that could be earning an acceptable rate of return at comparable risk elsewhere. This shareholder value-added metric is particularly challenging to the glass industry because of its need for major capital at the outset and ongoing infusions for periodic furnace rebuilds. When an expected return on capital investment fails to exceed a corporation's cost-of-capital target, it is difficult to attract needed capital to develop or sustain the business. Therefore, glass businesses must earn the cost of capital as well as meet the corporation's tolerance for risk.

II.9. Economics of energy conservation

Although reductions in melting energy have been achieved over the last several decades, actual energy consumed in melting glass is still considerably greater than the calculated theoretical energy. Successful advances in energy savings have included higher temperature-resistant refractories combined with greater insulation of furnaces, improved combustion efficiency, preheating of combustion air from waste products of combustion, and improvements in process understanding and control. Some proven energy reduction technologies for melting are not currently implemented.

The strategic government policy to reduce US dependence on foreign energy sources, and the desire of the US glass industry to be part of that solution, will affect energy issues. Yet the economic incentive for adopting proven technologies and developing new concepts may not be sufficient to justify the required cost and the effort. Minimizing energy cost per ton of glass produced is more important than reducing the energy content as measured in thermal units. With future cost and availability of fuel uncertain at present, it is difficult to justify technology

development and capital investment for energy reduction. The assumption is that the energy needed for glass melting will be available in the quantity and form that the technology requires. Since the energy crisis of the late 1970s, except for brief volatile periods, the United States has been in a 25-year period of low energy cost escalation. Energy has been readily available during this period. The value of the energy saved at the current cost of energy with an assumed low rate of cost escalation is not sufficient to justify many energy-saving technologies, particularly technologies that require a substantial investment of capital.

An "Annual Energy Outlook," published by the Energy Information Administration in the US Department of Energy, projects energy costs for 20 to 25 years in the future. These projections consider multiple low-growth and high growth economic scenarios. The January 2003 "Outlook," which projects energy demand, supply, and cost to 2025, forecasts relatively low energy cost escalation, even for the higher growth and greater energy demand scenario. This forecast, like any forecast of future events and expectations, may prove to be inaccurate. Glass industry experts who participated in a national workshop in connection with this study concluded that if the cost of energy were to increase three to five times over current levels, the glass industry's interest in energy-saving technologies would increase dramatically. But without reliable forecasts for future energy costs, the economic impetus is not present for the aggressive pursuit of revolutionary, energy-saving technology for glass melting.

Overall, energy consumed for glass melting has been reduced over the last 30 years. This energy conservation has been achieved by:
• conversion from coal producer gas to high-caloric fuel, or fuel oils and natural gas;
• application of fuse cast AZS refractories instead of low-grade aluminosilicate refractories for glass containment has allowed higher glass melting temperatures, greater use of insulation, and longer furnace campaigns between cold repairs
• larger regenerators with improved checker design and structure;
• recycling post-consumer glass; average cullet percentage in the US increased from 15 to 35 percent, and in Europe from 45 to 50 percent;
• production with greater throughput from larger furnaces.

The amount of energy that can be saved in the future is proportionally less today than it was in past years. For further energy savings, the conservation strategy must be practical. In the last 10 years, the cost of energy did not justify the cost of capital investment required for further savings. The low cost of available energy has not warranted the investment in development of technology to save energy.

To justify a furnace capital expenditure of $1 million if the cost of capital were 10 percent, a container-glass producer would need to save 6.5 percent of the batch and melting energy. If capital costs were 20 percent, the producer would need to reduce energy costs by nearly 12 percent. The energy cost reduction required to justify capital expenditure varies with cost of energy. An investment of $1 million requires an annual before-tax savings of $150,000 to earn a 10 percent cost of capital, and a savings of $270,000 to earn a 20 percent cost of capital. These levels of savings can relate to cost reduction in batch, melting and refining energy costs. (See Table II.12 for energy reduction required for return on investment.)

Table II.12. Reduction in Energy Cost (%) Required to Earn 10% to 20% Return on a $1 million Capital Investment per Glass Furnace.

	Flat	Container	Fiber
Btu/ton (millions)	9.28	6.18	9.08
$/ton	32.48	21.63	31.78
Ton/day	600	300	150
Ton/year (thousands)	210	102	52.5
$/year (millions)	6.8	2.3	1.7
% energy cost @ 10%	2.2	6.5	9.0
% energy cost @ 20%	3.7	11.7	16.0

II.10. Economics of environmental regulations

Governmental requirements for reduced air emissions from conventional furnaces are stringent and may become more so. The generation of CO_2, NOx, and SOx is inevitable when heavy oil is used as the fuel for glassmaking. Because resource conservation and environmental preservation are more important issues now than in the last 30–40 years, they must be approached in a more strategic manner. The cost of compliance with environmental regulations can vary depending on the method of control selected, the level of reduction to be obtained, and the way in which measures are integrated into the operation of the furnace. Alternative technologies must be compared with conventional furnaces on the basis of how their configurations meet emission control requirements.

All add-on devices to comply with regional, state and/or federal regulations increase capital and operating costs but do not improve productivity. Factory layouts may have space restrictions that create problems for adding on these options. Regenerative furnace designs are being challenged to find alternatives to refractories that contain chrome, due to more restrictive waste disposal regulations. Devices such as scrubbers and bag houses can add several million dollars to the capital investment in a glass plant, lowering capital productivity by adding capital costs, as well as costs for operations and materials handling costs, without increasing glass output.

Given the possibility that environmental regulations may become more stringent in the future, glass manufacturers must develop cost-effective technology that is compatible with manufacturing operations. Changes in glass chemistry can solve some environmental issues. Use of oxy-fuel melting to reduce NOx emissions is another cost-effective approach for complying with environmental regulations. In some cases, the introduction of environmental credits that can be sold or traded has been economically beneficial. However, the US glass industry today has not considered credits to be a significant economic proposition.

II.11. Conclusion

A critical component of the United States economy, the multi-billion dollar glass industry faces a number of economic challenges. Projections for future profits and growth are mixed and complex across the industry. Despite these economic challenges, most segments of the industry have maintained reasonable operating margins and generate positive cash flow.

In the current economic climate, the glass industry must continue its efforts to reduce the costs of raw materials, energy, labor, capital, environmental compliance, overhead and other operating expenditures. The glass industry lacks appeal for capital investors. Compared to businesses that generate several dollars of annual sales per capital investment dollar, the intensity of capital

investment of the traditional glass business discourages investors who are interested in rapid sales growth with limited capital resources. Because of the need for large capital investment for new plant construction and furnace rebuilds, glass manufacturers have increasingly sought ways to maximize production from existing furnaces. The need for additional production capacity and must be carefully balanced with market demand.

The glass industry is weakened by its fragmentation into the four product segments—flat, container, fiber (textile and insulation), and specialty glasses. This fragmentation hampers standardization and discourages collaboration that would empower the industry through economies of scale and increased bargaining power.

Innovations in technology that could enhance the glass manufacturing economy will be driven by the need for capital productivity, greater energy efficiency, and environmental regulation. Previous developments in glass melting technology have evolved from the 19th century Siemens furnace technology, rather than through the risky development of revolutionary glassmaking processes. The current challenges to glass manufacturing now require innovative thinking and planning if the industry is to be revitalized.

Overall, the industry maintains a steady cash flow, but capital expenses minimize the financial attractiveness of most segments of the industry. The glass container business has experienced an upsurge in the last three years as it has become more dependent on applications for alcoholic beverages, yet it will continue to face the threat of substitution by plastics and aluminum for certain popular beverages. Flat glass sales are affected by the overall economy via other markets, particularly automotive and construction, and can decline during recession periods. The overall trend in flat glass sales has remained positive over the past 25 years.

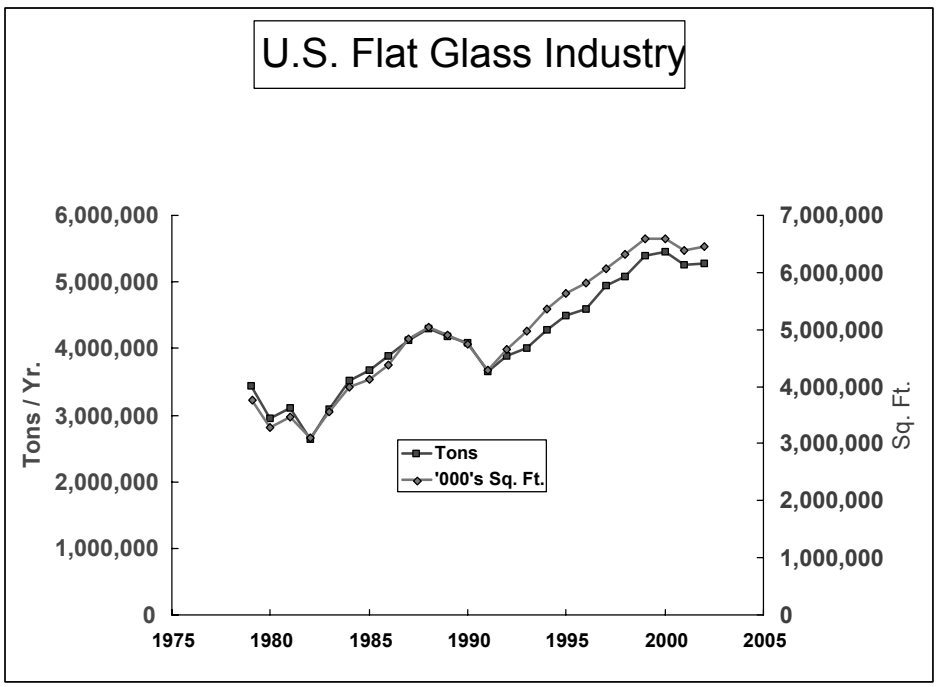

Figure II.1 Trend in Flat Glass Sales for 25 Years

Fiberglass insulation sales are expected to grow slightly with the increase in new residential construction and concerns about energy consumption. Textile and reinforcement glass fiber sales are cyclical, corresponding to the nation's economic trends. The specialty glass segment, which is composed of a number of sub-segments, represents the largest dollar value segment for US consumer and industrial markets. Specialty glass growth prospects vary greatly by sub-segment.

Across its different segments, the industry must develop cost-saving measures for capital improvements, energy costs, and emissions regulations that will make investment more attractive. Industry-wide problems—historic rivalry among companies within the industry, competition from low-cost imported glass products, high costs of production, high capital expenses, aversion to risk, high energy costs, and government environmental regulations—require visionary solutions and corporate collaboration if these problems are to be solved. All segments share concerns for environmental compliance and delivery of high-quality glass to downstream operations. Yet broad-based industry collaboration is precluded by differences in raw materials, glass chemistries, quality requirements, quality measurement metrics, fabrication methods, process accessibility, and flexibility of operations.

Collaboration throughout the glass industry in the US has been limited. This reluctance to collaborate is due in part to the differences in types of glass produced and furnace size within the individual manufacturing segments. Historically. competitiveness and antitrust concerns have also limited collaborative efforts. Industry leaders have indicated greater willingness to collaborate on advanced melting concepts when risk and precompetitive research costs are shared. The collaboration undertaken with the Submerged Combustion Melter Project, partially funded by the DOE, is perhaps a harbinger of the revitalization of this critical industry. (See Section Two, Chapter 3.)

Some advances in energy savings have been successful—higher temperature-resistant refractories, greater furnace insulation, improved combustion efficiency, preheating of combustion air from wasted heat recovery, and process control technology. Energy consumption for glass melting has been reduced considerably over the last 30 years. Glass manufacturers have developed energy-saving technology to the most cost-effective degree possible at present and are not inclined to advance research unless predictions for future availability and cost of energy change drastically.

Environmental regulations for gaseous and particulate emissions from glass furnaces are stringent and becoming more so. Cost of compliance varies, depending on method of control selected, the level of reduction to be obtained, and the way in which measures are integrated into the operation of the furnace. Complying with these regulations can be costly and can decrease capital productivity severely by adding capital costs for operations and materials with no increase in production.

A greater willingness to collaborate on precompetitive advanced melting concepts is essential. In the early stages of more revolutionary projects, risk and cost could be shared, possibly through stronger and more effective government-industry-academic partnerships. Ultimately, if the glass industry is to survive as a vital industry of the future in the United States, business and technical leaders must develop a common view of the forces that will stimulate the industry in the future

and increase cooperation on the highest-priority challenges. Efforts must include ways to improve capital productivity and attract capital investment.

Chapter III Traditional Glass Melting

III.1. Current practice

Understanding basic mechanisms of commercial glassmaking is essential for evaluating current and innovative technologies. Most commercial glass is melted on a large scale in continuous furnaces, either fossil fuel-fired tanks, oxy-fuel fired tanks, electric furnaces or mixed fuel furnaces. Three basic processes occur in the furnace tank: the melting process, the refining process, and the homogenization process, both chemical and thermal. These three processes can occur simultaneously within the melter.

Traditional glass formation involves placing raw materials, properly formulated and prepared, on the surface of previously formed molten glass. Additional thermal energy is applied to facilitate a series of basic mechanisms and produce more molten glass.

Commercial glass is a non-crystalline product that results from a fusion reaction between a number of oxide components at high temperatures. When cooled to a rigid state, the atomic structure of glasses resembles that of a liquid but in fact retains the same molecular structure at room temperature. Therefore, glass is referred to as a super cooled liquid and, unlike crystalline materials, has no sharp melting point.

Glass types are classified by chemical composition into four main groups: soda-lime glass, lead crystal and crystal glass, borosilicate glass and special glasses. Over 95 percent of all glass produced is soda lime, lead and crystal, or borosilicate composition. Special glass formulations are produced mainly in small amounts to account for 5 percent of glass produced commercially. Most commercial glasses are silicate-based with the main component being silicon dioxide (SiO_2).

In traditional glass melting furnaces, a well-mixed batch of raw materials is formulated to yield desired glass chemistry. As the batch is continuously charged into the furnace, it floats on top of the glass melt and is heated by the radiation of flames in the combustion chamber and the transfer of heat from the hot glass melt in which chemical and physical changes are occurring. Solid-state reactions between particles of the raw materials result in formation of eutectic melts. As the batch particles dissolve in the melt, reactions can occur to form gaseous components such as carbon dioxide and water vapor. In producing commercial quality glass, the glass producers' main concerns are dissolution of all solid particles, homogenization, and removal of gaseous products.

Quality of the glass product results from the temperature in the glass melter, the residence time distribution, the mean residence time, and the batch composition. Residence time of the molten glass in industrial furnaces varies from 20 to 60 hours. The maximum temperatures encountered on refractories or on the glass surface in the furnaces vary for the type of glass produced: 2912°F (1600°C) for container glass; 2948°F (1620°C) for flat glass; 3002°F (1650°C), for special glass; 3002°F (1650°C) for continuous filament; 2552°F (1400°C) for glass wool.

The conventional method of providing heat to melt glass is to burn fossil fuels above a batch of continuously fed batch material and to withdraw the molten glass continuously from the furnace. Glass is melted and refined at a temperature of 2372 to 2822°F (1300 to 1550°C) at which heat transfer occurs by radiative transmission from the refractory superstructure that has been heated by the flames to 3002°F (1650°C), and from the flames themselves.

A glass furnace is designed so that the heat input is arranged to cause convective currents to recirculate within the melted batch materials and to ensure consistent homogeneity of the finished glass that is fed into the forming process. The mass of molten glass is held constant in the furnace for a mean residence time of 24 hours for container glasses or a mean residence time of up to 72 hours for some float glass furnaces.

The melting processes for silica-based batches can be classified into three groups: particle melting, blanket melting, and pile melting. In particle melting, each batch particle undergoes the same temperature history. In blanket, or cold top, melting segregation and percolation of the melt may cause local demixing. This may not necessarily affect homogeneity. In pile melting, a non-uniform process, heat transfer, flow, melting reactions and bubble removal are combined. Normally, a batch pile support tipped slightly to the back wall supports the batch pile. The primary benefit is minimizing the radiation blockage from the traditional blanket. Borosilicates are normally melted by batch pile filling.

The overall geometry of the batch body or pile strongly impacts the melting process. The surface area of the batch body determines how much heat is absorbed. The shape and size of the batch affect the rate at which the liberated gases are removed or reabsorbed. About three-fourths of the pile is melted from the upper surface of the pile by heat that radiates from the flames and hot refractory materials of the furnace crown and walls. The rest of the batch is melted from the base of the batch by heat convection conducted and radiated from the hot molten glass underneath. A thin surface layer of batch absorbs heat from above, becomes liquid and flows down, exposing lower portions of the pile and plunging a heavier drained melt product into molten glass. This process is known as ablative melting. Differences in density due to concentration gradients and bubble swarms create a complex buoyancy flow pattern under the pile. Batch melting is sensitive to geometrical configuration because of these mechanisms.

In gas-fired and all-electric furnaces, the batch fusion is controlled by heat transfer, material flow, and mass transport mechanisms. The runoff from a pile is controlled by flow, and the mass transfer operates in the final stages when all reactions are completed, except for dissolution of a molten liquid phase. Bulk density is affected by gases that may evolve in large quantity and convert batch into a foamy mixture. Melt viscosity depends at a given temperature on the fraction of silica dissolved prior to reaching the final glass composition.

Choice of melting technique depends on the capacity needed, the glass formulation, fuel prices, existing infrastructure, and environmental performance. Environmental performance of each melting technique depends on the type of glass produced, the method of operation, and the furnace design. The choice of furnace is one of the most important economic and technical decisions made in the construction of a new plant or for a furnace rebuild. In all cases, replacing preheated air with oxy-fuel combustion is a possible alternative. General guidelines for selecting the type of melter to be used are as follows:

- cross-fired regenerative furnace for large capacity installations (>300 tpd);
- regenerative end port furnaces are preferable for medium capacity installations (100-300 tpd);
- recuperative unit melters, regenerative end port furnaces, and electric melters for small capacity installations (25–100 tpd).

Glassmaking is a high-temperature operation, and thus is very energy-intensive. The energy needed to melt glass accounts for over 75 percent of the total fossil fuel energy requirements of glass manufacture. Energy is also consumed in forehearths, the forming process, annealing, factory heating and general services. The fossil fuel energy used for a container glass furnace is typically 78 percent for melting; working end/distributors, 4 percent; fore hearth, 8 percent; lehr, 4 percent; and other, 6 percent.

By using cullet, energy consumption can be reduced, partly because the chemical energy required to melt the raw materials has already been provided. As a rule, every 10 percent increase in cullet usage results in energy savings of 2 to 3 percent during the melting process.

Glass manufacturers have worked to reduce energy consumption to the lowest practical levels. Central to the design of a furnace are the choice of energy source, heating technique, and heat recovery method. Natural gas, oil and electricity are primary sources of energy, with light oil and propane used as backups for curtailment

periods. Natural gas is the preferred fossil fuel for glass melting in the United States, with heat content ranging from 900 to 1000 Btu/ft^3. Light to heavy fuel oil has heat content between 135,000 and 155,000 Btu/US gal. Heavy fuel oil (#5, #6) is viscous at low temperatures and must be heated before being fed to burners, where it is atomized with compressed air for combustion or mechanically atomized to save 7 percent energy by avoiding heating the cold atomizing air to flame temperature.

Gas-fired regenerative furnaces are about 20 to 35 percent or as high as 41 percent efficient when comparing actual energy consumption to theoretical requirements. Container furnaces are higher efficiency than the Color Television (CTV) furnace. When oxygen is substituted for air, oxygen reduces the fuel required to melt a unit of glass. For a well-engineered soda-lime glass furnace, fuel reduction with conversion to oxy-fuel is typically 10 to 15 percent. Oxy-fuel firing can reduce energy consumption by eliminating the majority of the nitrogen from the combustion atmosphere and reducing the volume of waste gas emissions by 60 to 80 percent. Energy consumption can be reduced because the atmospheric nitrogen does not have to be heated to the temperature of the flames, and a lower volume of hot combustion products exit the furnace.

However, the most flexible furnaces are electrically boosted, fossil fuel tank furnaces that use combined energy sources rather than a single fuel. By directly applying electrical energy to molten glass by electrodes, glass is melted more efficiently—2 to 3.5 times greater than by using fossil fuels. But production of electricity from fossil fuel at the power plant is only about 30-percent efficient.

Electric furnaces lose less heat from the structure and have no costly regenerators or recuperators to repair or replace. Electric furnaces are about 85 percent efficient due to the high thermal insulation of the batch (blanket) on the melt surface. In addition the water-cooling jackets on molybdenum electrodes pull additional heat. The first 3 percent of furnace energy applied nearly offsets these heat losses through electrode contacts. Less than 10 percent of melters are all electric after more than 70 years of application and 25 percent are oxy-fuel after only 14 years.

III.2. Traditional furnace designs

Heat to melt glass is provided by burning fossil fuels above a bath of continuously fed batch material and continuously withdrawing molten, founded glass from a furnace. For melting and refining the glass, the temperature depends on the formulation of the melt but is between 2372 and 2822˚F (1300 and 1550˚C) Heat transfer is dominated by radiative transmission from the refractory superstructure that is heated by the flames to up to 3002˚F (1650˚C), and from the flames themselves. In each furnace design heat input is arranged to recirculate convective currents within the melted batch materials to ensure consistent homogeneity of the finished glass that is fed into the forming process. The mass of molten glass in the furnace is held constant and the mean residence time is about 24 hours of production for container furnaces or about 72 hours for some float glass furnaces.

Traditional designs in operation in current glass manufacturing are regenerative, recuperative, oxy-fuel fired, electric, mixed-fuel furnaces pot/day tank, unit melters. A furnace is chosen based on the requirements of a glass manufacturer.

• ***Regenerative furnace***

More than 50 percent of industrial glass furnaces in the US are regenerative furnaces. The maximum theoretical efficiency of a regenerator is 80 percent because the mass of waste gases from a furnace exceeds that of the incoming combustion air and the heat capacity of exhaust gases exceeds that of combustion air. The efficiency of the furnace is limited by cost and structural losses are greater as the size of regenerators increases. A regenerative furnace design with greater than 70 to 75 percent efficiency is difficult to conceive.

In the regenerative furnace, two regenerator chambers contain checker bricks to absorb waste heat from the exhausting combustion gas products. One chamber is heated by waste gas from the combustion process while the other preheats incoming combustion air. The furnace is fired on only one of two sets of burners at any given time. The flow alternates from one side to the other about every 20 minutes, and combustion air passes through the checkers and is preheated before entering the combustion chamber.

With this waste heat recovery method, preheat combustion air temperatures up to 2600°F (1426°C) may be attained. Thermal efficiencies are greater in the regenerative furnace than in direct-fired unit melters. Greater capital costs are required for building and maintaining the additional refractory structures and reversal equipment. Space requirements are also greater. The high capital cost of regenerative furnaces makes them economically viable only for large-scale glass production (>100 tpd). They are commonly used for container and flat glass making.

A regenerative furnace may have side ports or end ports. With either configuration, the melters are usually larger than 750 ft^2 and produce more than 300 tpd in side port furnaces. They are used mostly by flat glass furnaces and have three to seven ports on each side. Their large flame coverage of the melting surface helps to yield higher melting rates and more stable melting conditions because of good heating control along the full length of the furnace. End-port furnaces have single entry and exhaust ports in the back wall. Regenerator chambers share a common wall. With this configuration, structural heat losses are lower and thermal efficiency is higher. The two regenerative chambers are situated at one end of the furnace with a single port. The flame path forms a U-shape, returning to the adjacent regenerator chamber through the second port. This arrangement is more cost effective than the cross-fired design but is less flexible for adjusting the furnace temperature profile, and therefore is less favored for larger furnaces.

A modern regenerative container furnace has an overall thermal efficiency of 40 percent when the best construction and insulation practices are followed. Waste gas losses are around 30 percent, and structural losses make up most of the remaining 30 percent. End-fired furnaces are more thermally efficient, up to 10 percent higher than side-fired. But combustion control is more limited and furnace size is currently limited to around 1300 ft^2. Float glass furnaces are less efficient than container glass furnaces because the specific pull of a float furnace is much lower due to greater refining quality requirements.

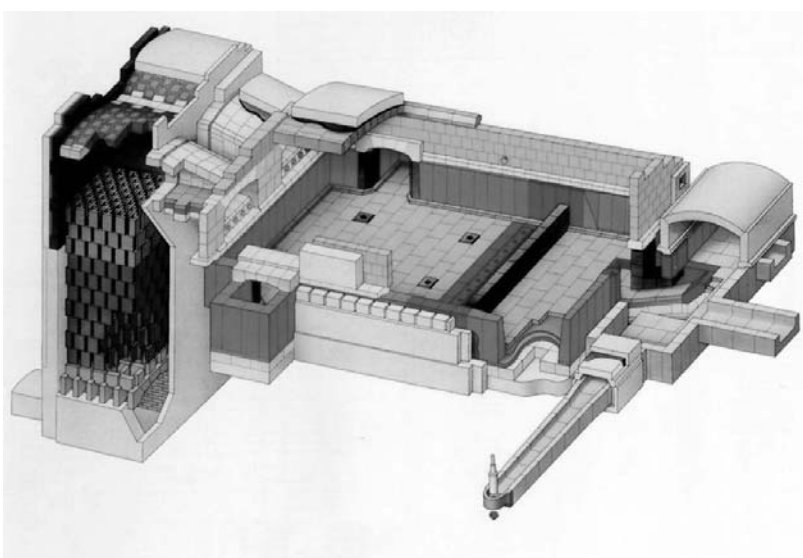

Figure III.1. End Port Melter

• ***Recuperative furnace***

Since the 1940s, glass manufacturers have used recuperative furnaces that employ heat exchangers, or recuperators, for heat recovery. In these furnaces, incoming cold air is preheated indirectly by a continuous flow

of waste gas through a metal heat exchanger. The air preheat temperatures are limited to around 800°C and the metal used for the recuperators must be carefully selected to resist chemical attack. The burners are located along each side of the furnace, transverse to the flow of glass, and fire continuously from both sides, thus allowing better control and more stable temperatures than in end-fired furnaces.

The recuperative furnace is used in the US primarily for small-capacity installations where high flexibility of operation is required with minimal initial capital outlay, particularly where scale of operation is too small to be economically viable. The furnace is used most often for textile fiberglass production.

Although a recuperative furnace is less energy efficient than a regenerative furnace, it does recover a substantial amount of heat via the recuperator system in the form of combustion air operating at a lower temperature than for regenerative furnaces. The specific melting capacity of recuperative furnaces is limited. The lower combustion air temperatures result in lower NOx emissions. Manufacturers have improved energy efficiency in recuperative furnaces, particularly in Europe, by bubbling, electric boosting, waste heat boilers, gas preheating and batch/cullet preheating.

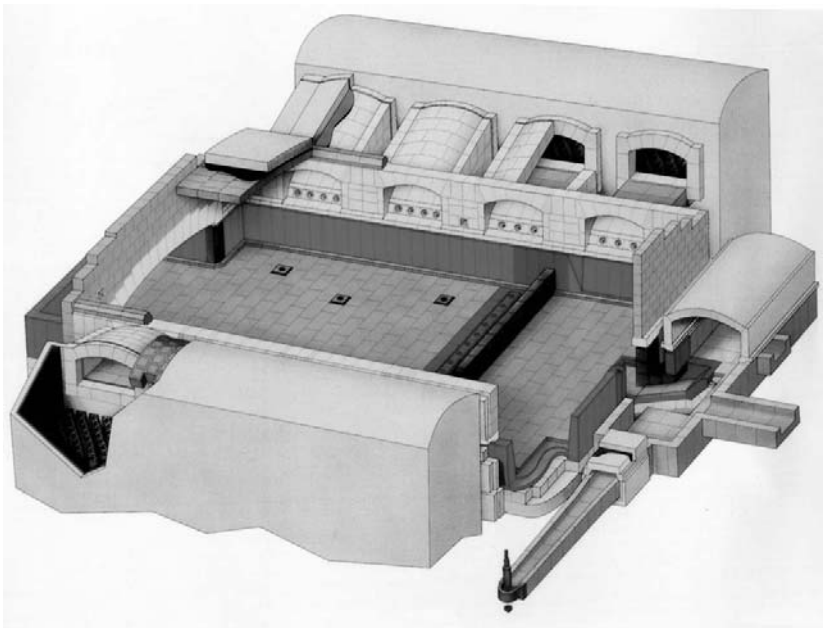

Figure III.2. Side Port Melter.

- ***Pot/day tank furnace***

Pot furnaces are used for melting smaller quantities of glasses below 2552°F (1400°C). Pots, whether single or multiple port, are inefficient fuel consumers and have poor temperature control. But they can be heated from the sides as well as the top and are useful for melting heat-absorbing specialty glasses such as tableware and art glass. Day tanks are usually preferred for experimental melts because they have better refractories and higher attainable temperatures. Day tanks burn gas or oil and use a single opening for both charging and gathering glass.

Energy consumption of a pot or day tank furnace is very high due to the minimal insulation, very low pull rates, and minimal waste heat recovery. Refractory life is poor due to thermal shock from rapid batch charging and wide variations in temperatures required for melting, refining and working from the same furnace. Output rarely exceeds 2 tpd. Operation is intermittent where batch is charged for a melting cycle, typically overnight, and production is worked from its holding capacity during the day.

- ***Unit melter***

The unit melter is the simplest design furnace intended for continuous glass production rates below 150 tpd where less capital investment in the furnace is desired. This type of furnace has been used for producing glass types with shorter refractory life or that cause concerns with regenerator plugging, such as textile or wool fiberglass.

A basic melting chamber features burner firing positions along each side with exhaust units in the back wall, or rear corners. Direct-fired burners feature gas or oil burners that use ambient air or preheated combustion air from recuperators. In some isolated applications, regenerative burners have been used, but heat transfer bed material is prone to plug if raw materials used are fine or highly volatile.

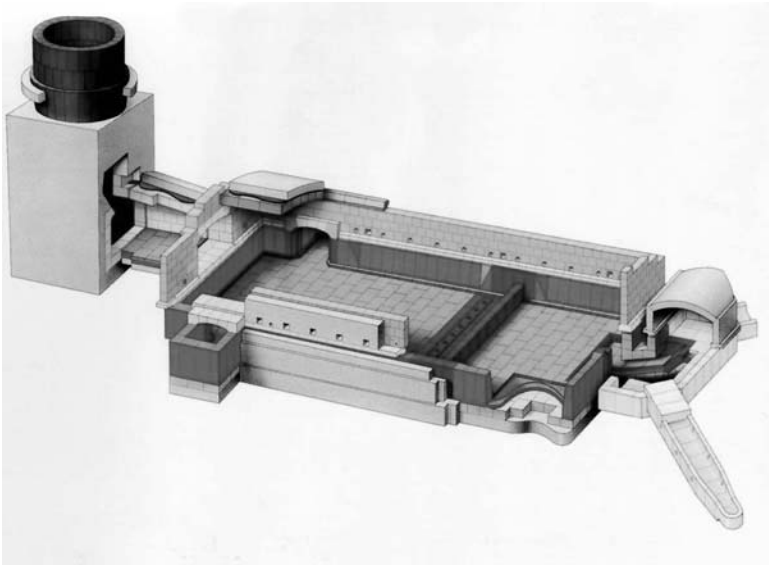

Figure III.3. Unit Melter.

- ***Oxy-fuel furnaces***

Oxy-fuel configurations are nearly identical to traditional glass melters in that both rely on mechanisms that place formulated and prepared raw materials onto the surface of previously formed molten glass. Additional thermal energy is applied above the batch charge or within the molten glass to drive a series of mechanisms to introduce more molten glass into the system. Because oxy-fuel furnaces are relatively low-risk technology for glass melting, some 25 percent of manufacturers in North America have converted some furnaces to oxy-fuel firing technology since the 1990s, when Corning Incorporated assisted Gallo Glass of Modesto, CA, with successful installation of an oxy-fuel, large container glass furnace.

Glass melting furnaces have been converted to 100 percent oxygen firing primarily in response to environmental regulations. Oxy-fuel systems are one of the most thermally efficient and cost-effective ways to enable glass manufacturers to meet NOx emissions restrictions. Oxy-fuel conversions satisfy NOx regulations at a low cost. In oxy-fuel technology, oxygen supports combustion in industrial furnaces as oxygen replaces air, which contains 21 percent oxygen and 79 percent nitrogen, as a source of oxygen. The net impact of oxy-fuel firing on melting costs is site-specific and usually includes offsets in cost of production quality.

The typical flame in an oxy-fuel fired furnace can be of lower velocity than the flame in a conventional furnace. Depending on burner type and firing rate, the burner can be adjusted internally for various flame lengths that influence flame velocity. The design of the combustion volume space, burner orientation and placement configurations, and location of the exhaust affect the dwell time for combustion products.

Although the volume of exhaust gases is reduced by oxy-fuel conversion, waste heat recovery systems are still possible, especially since the temperatures are high-quality heat. Preheating of batch and cullet is convenient because exhaust flues are in close proximity to the batch charging. Other heat recovery devices, such as waste heat boilers for cogeneration, recuperators, or gas reformers, can be used because the hot gases are ducted away from the furnace area.

Fewer components fail and cause temperature control disruptions because intermittent operating valves and motors are eliminated. The operation of the furnace is improved by the absence of furnace reversals that adversely affect the continuity and stability of operation: consistent heat input, atmospheric pressure and atmosphere constituency. In oxy-fuel firing, energy input can be reduced by eliminating the need to heat the 79 percent dead weight of nitrogen that enters the melter in air and reducing the 70+ vol. percent of hot combustion products that leave the system.

To avoid driving the furnace atmosphere's volatile species into refractory joints, furnace pressure must be maintained to minimize the amount of air infiltration under negative pressure conditions. If the pressure is too high, joint openings are subjected to condensation of volatiles that will result in refractory deterioration. This is especially true for the crown, doghouse and back walls.

The atmosphere above the melt in an oxy-fuel furnace will have a higher water content and be much more consistent. For this reason, higher and possibly more consistent water content will be found in the formed glass. Since this component lowers viscosity, some melting reactions in the batch melting process can progress more rapidly. Forming properties that are dependent on and sensitive to glass viscosity should stabilize. Key parameters for oxy-fuel burner operation can be confirmed by computer modeling in conjunction with combustion laboratory evaluations. Concerns such as burner block temperature, clarifying turndown capabilities, flame conditions, thermal transfer, and heat release issues become important.

Capital costs for construction and maintenance of an oxy-fuel conversion are less expensive than traditional furnaces because the refractory and steel materials required for regenerators and port structures are eliminated. Melter superstructure components are less expensive than those of a regenerative furnace when burners, batch charging and exhaust are properly placed in the furnace. However, operating costs are typically higher than for gas-air combustion furnace operations. When furnaces are adapted to oxy-fuel firing and regenerators are removed, more space is available for waste heat recovery equipment and other air emission control devices. Melter size can be enlarged for additional production capacity. By redesigning the melter for more appropriate pull rates, glass product quality can be improved and furnace life can be extended.

The advantages of oxy-fuel technology, in addition to compliance with environmental regulations, are that it improves operations, enhances glass quality, and allows increased production. Its disadvantages include the need to modify the furnace and adapt the melting and refining process. Corrosion of superstructure refractories within the combustion space occurs to a greater extent depending on glass compositions, furnace design and operating practices. Operating costs are higher than for gas-air combustion operations. But these costs can be offset by reduced capital costs, increased production capacity, savings in batch material, and improvement in glass quality.

- ***Electric furnaces***

Electric glass melting furnaces have been used for a number of years with varying success but only in the 1980s were larger capacity electric furnaces considered for replacement of fossil fuel-fired melters. Electric melting is commonly used for production of potentially volatile, polluting glasses, such as lead crystal and opal glass, and for high value-added products. Electric melting is also used in other sectors, including wool insulation, specialty glass, and sometimes wet chop fiber. In general, electric melting produces a very homogenous, high-quality glass.

Furnace emissions are reduced and thermal efficiency is very high in electric furnaces, but wider use has been limited by operating costs and technical considerations. Electric melting can only be installed in a furnace at rebuild. Higher alkali insulating wool fiberglass can be produced in cold-top all-electric furnaces up to 200 tpd, but has been determined to be uneconomical and not technically viable. One float glass plant in the United Kingdom experimented with an electric furnace to demonstrate the principle of cold-top electric melting. On a pilot scale, the plant was successful for producing a range of exotic glasses for which the emissions would have been difficult to control in a conventional furnace. The experiment also showed that it is not economically viable to operate a full-scale float glass line (>500 tpd) with electricity.

Based on current practice, electric furnaces may be viable for continuous operations according to the following guidelines:
• furnaces below 75 tpd are generally viable;
• furnaces in the range of 75 to 100 tpd may be viable in some circumstances;
• furnaces greater than 150 tpd are generally unlikely to be viable.

The viability of choosing electricity as a fuel source depends mainly on the price differential between electricity and fossil fuels. Average electricity costs per unit of energy are two to three times the cost of fuel oil and can vary up to 100 percent from region to region. Electric furnaces are thermally efficient, two to four times better than air-fuel furnaces, and can be more competitive than air-fueled furnaces in the 15 to 100 tpd range of throughputs because of their lower specific heat losses. Site specific factors can also influence a decision to use an electric melter, such as prevailing energy costs; product quality requirements; available space; costs of alternative abatement measures; prevailing legislation; ease of operation; and the anticipated operating life of alternative furnaces. To compare costs, 292 Kw is one million Btu. At 5 cents per Kw a million Btu of electric costs $14.60, and this is higher than most natural gas priced from $6 to 7 per million Btu's. Looking at the multiple of efficiency, with electric being near 85 percent, makes it affordable with increasing gas prices. However, $.05 per Kw is becoming a low number as well.

Completely replacing fossil fuels as a heat source for a glass-melting furnace eliminates such combustion products as oxides of sulfur, thermal NOx and carbon dioxide. Other emissions arise from particulate carryover and decomposition of batch materials, particularly CO_2 from carbonates, NOx from nitrates, and SOx from sulfates.

The emission of volatile batch components is lower than in conventional furnaces due to the reduced gas flow and the absorption, condensation, and reaction of gaseous emissions in the batch blanket, which usually covers the whole surface of the melt. Furnaces are usually open on one side and gaseous emissions and heat from the melt cause air currents. Some form of ventilation is needed whether by natural draft or extraction to allow dust, gases, and heat to escape without entering the workplace.

The waste gas emitted by natural draft will be very low volume but may have high dust and chemical concentrations (chlorides, sulfates, NOx and other toxic vapors) and poor dispersion characteristics. Dust emissions can be controlled by extraction to a dust abatement system, which is usually a bag filter due to the low volume involved, allowing for low dust emissions and treatment of halide emissions by dry scrubbing if necessary.

Although electric furnaces have lower capital costs than conventional furnaces, which when annualized compensate partially for the higher operating costs, the furnaces have shorter campaign lives. They require rebuild or repair every two to six years, compared to five to 14 years for conventional furnaces.

Two shortcomings of electric furnaces are that the glass produced is insufficiently refined for some requirements, such as color TV faceplates. Furnace refractories are corroded more rapidly than in combustion-heated furnaces. Several patents have been developed to address the problems in electric melting of residence time in tank and refractory wear and resultant glass quality. (See Table III.1 for Advantages and Disadvantages of Electric Melting.)

Table III.1. Advantages and Disadvantages of Electric Melting

Advantages
Very low direct emissions
Potentially increased melting rate per m^2 of furnace area
Improved direct energy efficiency
Lower raw material costs in some cases
Electric melting gives better quality, more homogeneous glass in some cases
Reduced capital cost and furnace space requirements
Potentially more simple operation
Disadvantages
High operating cost
Reduced campaign length
Not currently technically and economically viable for very large-scale glass production
Less flexible and not adapted to large pull variations for high quality glasses
Associated environmental implications of electricity generation

- ***Mixed-fuel furnaces***

The method of electric boosting adds extra heat to a glass furnace by passing an electric current through electrodes in the bottom of a melting tank. It can contribute 2 to 20 percent of total energy input. Many furnaces install electric boosting for use when needed.

Traditionally, electric boosting has been used to increase throughput of a fossil fuel-fired furnace to meet periodic fluctuations in demand without incurring the fixed costs of operating a larger furnace. Electric boosting devices can be installed while a furnace is in operation. Electric boost can be applied to end port, side port, and unit melters. Practice has shown that electricity applied near the back end of the furnace, where batch is added, can reduce fossil fuel needs because it lowers the temperature of the melt surface and reduces batch volatilization.

Electric boosting, which assists glass melting by improving convective currents within the furnace, thus facilitating heat transfer and aiding refining, became possible when molybdenum electrodes were developed in the 1950s. The method is commonly used in fossil fuel-fired glass furnaces to increase productivity and furnace capacity, improve glass quality, and minimize air emissions. More than half of all regenerative tank glass furnaces were electrically boosted in the 1990s.

In container and float glass furnaces, electric boosting might be limited (<5 to 15 percent of the total energy input) due to cost of electricity. Most container glass furnaces incorporate electric boosting. In colored glass production, variable levels of electric boost are used due to the poor radiant heat transfer in green and amber

glass. Electric boost is often used to support the pull rate of a furnace as it nears the end of its operating life or to increase the capacity of an exiting furnace.

Two approaches to use mixed melting are fossil fuel firing with electric boost or electrical heating with fossil fuel support, a less common technique. A hot top or mixed melter is usually a conventional all-electric furnace with supplemental fossil fuel firing added for additional output or to promote gas evolution through the batch blanket. Although this configuration is much less efficient, it is necessary to produce chemically reduced glass compositions or to use high cullet ratios.

Electric boosting will reduce the direct emissions from the furnace through partial substitution of combustion by electrical heating for a given glass pull rate. However, high levels of electric boost are not used on a long-term basis for base-level production because of high operating costs.
By overcoming technical and economic limitations of electric boosting, more of the environmental benefits of electric melting could be realized.

III.3. Conclusion

To develop practical glass melting technologies that will meet the requirements of glassmaking in the 21st century, the basic mechanisms of traditional glass melting must be fully understood. Currently, large-scale continuous furnaces are used for melting, refining and homogenizing most commercial glasses, whether they be soda-lime, lead crystal and crystal, or borosilicate glasses.

The conventional method of providing heat to melt glass is to burn fossil fuels above a batch of continuously fed batch material and to withdraw the molten glass continuously from the furnace. The melting process for silica-based batches can be classified into three groups: particle melting, blanket melting, and pile melting. The melting technique used depends on the capacity needed, the glass formulation, fuel prices, existing infrastructure, and environmental performance.

For the energy-intensive process of glass melting, fuels are either fossil fuels (for recuperative, regenerative, pot/day or unit melter furnaces); oxy-fuel; electric furnaces; or mixed-fuel (fossil fuel electrically boosted). More than 50 percent of industrial glass furnaces in the US are regenerative furnaces. Because oxygen-fired furnaces do not involve radical redesign of fossil fuel furnaces, they require relatively low risk in converting to oxy-fuel, and some 25 percent of the glass furnaces in the US have converted to this technology in the past decade. Electric furnaces produce a homogeneous, high-quality glass while reducing polluting emission. Electric boosting can increase the production of a fossil fuel furnace and is less costly than expanding furnace capacity for higher production.

Current glass melting technologies are adaptations of the continuous, large melter furnace Siemens design and each provides alternative methods of melting for requirements of specific types of glasses. A furnace is chosen for its ability to address the main concerns of glassmakers: dissolution of all solid particles, homogenization, and removal of gaseous products. See Section Two, Chapter 1, for a Primer of Glass Melting.

Chapter IV Innovations in Glass Technology

IV.1. Glass melting innovations

Many innovations in industrial glassmaking have been explored during the second half of the 20th century as glassmakers have sought to solve critical industry problems. Few of these innovations have been commercialized. Instead, the design of the ancient 1867 Siemens furnace has evolved steadily over some 136 years to meet basic requirements for glass manufacturing with minimal financial or technological risk. The need for advances in glass melting systems remains crucial to the future of glass manufacturing in the United States.

In the course of investigating the technology developments proposed or considered over the past 30 years, Phil Ross accumulated all relevant patents on file that dealt with improvements in the glass melting process. Walt Scott, a retired PPG scientist, reviewed 325 patents to evaluate their relevance with regards to a series of 22 categories identifying the main concepts of importance to the glass manufacturing process. These patents are compiled in Appendix A for their relevance to one or more of these 22 categories. Interested investigators will find these listings to be of great value in identifying technology developments that have been considered in each of these areas as they consider possible approaches to take in the future.

To comply with increasingly stringent clean air laws and environmental requirements, combustion heated furnaces must be replaced, modified or re-equipped, as they are inherently air polluting. Improved techniques must be developed to recycle glass industry wastes and used glass products. Electric melting must be improved for longer furnace life, higher quality glass and fuel efficiency. Contemporary glass melting tanks must be redesigned, adapted, or replaced with less expensive, more flexible melting technologies. Anti-NOx techniques may influence glass-melting technology perhaps more than cost or lack of tank furnace flexibility. The high initial capital cost of furnace construction or furnace rebuilds must be addressed either through design or materials.

Each segment of the glass industry has unique interests and requirements. In deciding whether a technology is appropriate for an industry segment, the attributes of the technology must be evaluated.

- First, the quality requirements of the glass product's application must be satisfied. Any new technology must be capable of producing a melt with properties at least as good as those produced by conventional furnaces.
- Second, the cost of manufacturing a glass product must be low enough to compete in a competitive market, including competition with alternative materials.
- Third, a process must be compatible and reliable with the product forming process for a capital-intense manufacturing process to be operated efficiently; some manufacturing requires flexibility of pull rate and for composition changes.

This historical review of selected innovations in glass melting technology provides a basis for further study of glass melting technology. Descriptions of the technologies provide a basis for further research and analysis that could lead to new glass melting technologies for a new age. The list of innovative systems is by no means complete, nor is it intended to be. Many advanced glass technologies have not proved to be commercially successful, but in the light of advanced

materials, state-of-the-art equipment, and advanced glass science and engineering they might suggest future directions for research and development.

IV. 2. Systems innovations

A number of glass melting technologies that have been developed and tested conduct both melting and refining by non-conventional means. The innovations in advanced glass melting reviewed here cover all aspects of the glass melting process, from batch preheating to emissions control.

The continuous fossil fuel furnace has been improved continually with the development of new refractories, the substitution of fossil fuels for producer gas, and over a century of experience. To address some of their more critical problems, glass manufacturers have modified tank designs and developed flame technology and flue gas treatment to reduce emissions. Innovations in flame technologies, electric melters and complete melting and refining systems that developed over the last half of the 20th century have been documented by James Barton of Saint-Gobain, France, and his work provides the basis for much of the analysis to follow. (Barton 1993)

Traditional glass melting has evolved and improved as advances have been devised in combustion technology; refractories have been improved; raw materials have been discovered as beneficial; and process controls have been developed for the glass-forming process. However, before a non-conventional idea can be accepted and introduced into glass manufacturing, the innovation must improve glass formation mechanisms by optimizing heat transfer, extending refractory life, and minimizing operation complexity.

IV.2.1. Segmented melting

A segmented system in continuous tank furnaces can address the drawback caused by the re-circulation flow in the melting tank, which results in a broad residence time distribution by limiting the maximum residence time of the molten glass in the furnace tank. Since the shortest residence time should be sufficient to complete fining and melting, the minimum residence time is a critical value that depends on the required glass quality and temperature level in the furnace. Many of the attempts to design an advanced glass melting process have applied a segmentation of the melting process in distinct steps, incorporating driven systems to increase dissolution of sand particles and initial gaseous evolution from raw materials. Segmentation was considered in the design of Saint Gobain's FAR and FARE melting processes (section IV.9; the PPG P-10 melter (section IV.3.), and the Owens-Illinois RAMAR melting technology (section IV.9). These innovative processes have not been commercialized either because of high development costs or because of economic issues, glass quality issues, or intense refractory wear. (See Appendix C.)

IV.2.2. Segmented glass furnace design

In segmented glass furnace design, the residence time of the molten glass in the melter is limited. The re-circulation of the molten glass results in a broad residence time distribution. The shortest residence time should always be sufficient for complete fining and melting, but required glass quality and temperature level in the furnace create a critical minimum residence time. Some glass scientists and industrialists believe that glassmaking could be optimized by segmenting the

various stages of the process. Each step requires special conditions, each of which is different from the conditions of the process step before and after it.

Segmentation of the tank appears to be the most promising design for a melting process with a narrow residence time distribution and a minimum residence time greater than a critical residence time value. Optimum conditions for each process step could be controlled. The capacity of the melting process can be increased by methods of acceleration and/or removal of glass volumes that do not contribute to the primary objective of converting raw materials into refined, homogeneous glass. The process capacity can be increased by any process acceleration or dead volume decrease. Increasing the capacity of the entire melting process leads to energy savings or space miniaturization, as well as reduction of capital cost per ton of product produced.

The advantages of the segmented melting tank furnace design are:

1. Residence time distribution can become much smaller.
2. Average residence time and tank volume can be reduced.
3. Optimum conditions, such as temperature, residence time, and mixing can be controlled in a segment of the furnace almost independently of the operation of another section.
4. The most suitable heating source can be used for each section.
5. In a separate fining section, new fining techniques, such as low-pressure fining, high temperatures, acoustic techniques or gas bubbling (stripping) techniques, can be applied. Residence time in the fining section can be limited to two to three hours.
6. Local repairs can be carried out more easily in a segmented melter.
7. Total volume of the melter can be reduced by a factor of 3 to 5 per ton of glass melt produced. Thermal losses through the furnace walls will also decrease from that of a conventional rectangular tank furnace. Only one small section, the fining section, will operate at high temperature.
8. Segmented melting is flexible. A composition or color change will require less time in the new glass-melting concept than in the single-tank furnace.

IV.3. PPG P-10 process (1987)

In one of the most revolutionary advances in glass melting in the past century, PPG developed the P-10 melting system with the intent to devise glassmaking technology that would reduce energy consumption; lower capital investment per ton of glass produced; allow greater flexibility in glass compositions; generate less solid waste from furnace rebuilds; and comply with increasingly stringent air emission standards for NOx, SOx and particulate. Each phase of the glassmaking process was optimized independently to achieve these goals. The process that was developed addressed a number of key issues:

- to intensify the melting process to reduce the size of furnaces;
- to improve refining time to remove seeds and gaseous inclusions;
- to extend refractory life and reduce costs of lining rebuild;
- to incorporate air emission controls into the process;
- to minimize energy input and maximize return of waste heat into the melting process;
- to reduce the size of batch material particles for more effective melting and rapid color composition changes;
- to increase capability to produce specialized glass formulations that are difficult to produce in conventional melters.

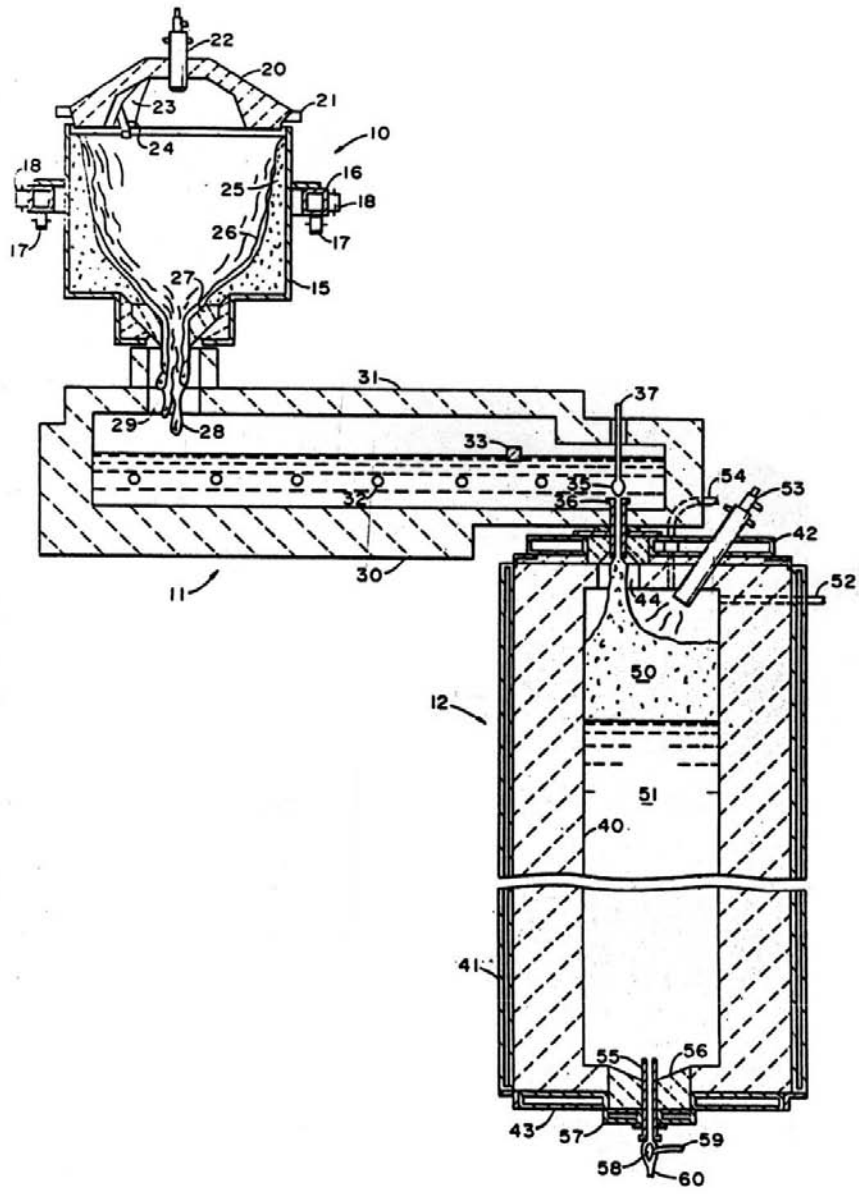

Figure IV.1. PPG P-10 Primary Melter, Secondary Melter, and Vacuum Refining.

The glass formation process is segmented into four distinct processing devices: batch preheater/calciner; glass melter (primary melter); glass dissolver (secondary melter), vacuum refiner. (Pecoraro et al., 1987) In the PPG system, raw materials are preheated, using waste heat from the melting phase and de-carbonated in two inclined rotary kilns, one in which lime and dolomite are calcined in four-fifths of the sand. In a longer kiln, sodium metasilicate is produced from the soda-ash and one-fifth of the sand. The calcined products and the sodium silicate are fed into a rotating melting pot and are maintained on the walls of the pot by centrifugal force. The batch on the wall virtually eliminates the need for a refractory lining on the pot. A central torch melts batch off the wall, which then flows out the bottom of the pot. The complete dissolution of batch is accomplished in a shallow heated canal equipped with electrodes or a

series of compartments heated and agitated by submerged oxy-hydrogen burners. Refining of the glass is achieved by reducing the pressure over the glass to 20-40 millitorr (only a few percent of atmospheric pressure). Under this low pressure, trapped or dissolved gases expand, forming bubbles and generating foam. Only small concentrations of fining agents (sulfates or water) are required. Burners in the low pressure space, rapid pressure changes and direct injection of water are used to break up the foam and limit its height. Before forming, the glass is stirred thoroughly, and frits may be added to color the melt at this stage. [Pecoraro, G.A., et al. USP 4 792 536 (1987). The total residence of the glass from entrance to exit is approximately half a day, which is very short compared to traditional glass melting approaches.

Air emission controls that anticipate more stringent regulations were incorporated into the P-10 system. Combustion of fossil fuels with air at high temperatures results in the formation of NOx emissions. This NOx can be minimized by using oxygen for heating in the primary melter and all other process areas. Minimally entrapped air nitrogen can enter the system because the combustion exhaust preheats the batch. Particulate emission is controlled by passing exhaust gases through a batch preheater and a conventional bag house that operates above the dew point. By converting to oxygen-fuel combustion, eliminating use of sulfates, and filtering the system's exhaust gases through incoming prepared batch, all air emissions were reduced. In addition, by filtering the hot exhaust gases, heat can be recovered and used to promote more rapid melting. The ablative melter and vacuum refiner of the P-10 system demonstrated that reduced pressure can create the super saturation needed for good fining, and under proper conditions dissolved gases and bubble concentrations can be controlled. This method of vacuum refining used in the P-10 process requires no sulfates in the system, thus minimizing SOx emissions. The PPG P-10 process is non-polluting, has a short residence time and can produce glass with high ferrous iron contents free of amber coloration for anti-solar automotive and architectural glazing.

The P-10 melting system was installed at PPG facilities in Chehalis, WA, and Perry, GA, and demonstrated that the technology met the original goals for which it was developed. When the project was started, energy required for a flat glass furnace was about 6 million BTU/ton. The developers of the technology thought theoretical energy consumption was 2.2 million and their tare for P-10 was 2.5 million. With the P-10 system, they reached 4.0 million with quality and believed that they would have reached 3.5 million.

PPG discontinued use of the P-10 melting systems for glassmaking when the corporation was faced with excess manufacturing capacity. Moreover operating costs were not competitive with current energy and capital costs. Despite the technological accomplishments, the units experienced operating instability, cost of purchasing oxygen offset the low costs of natural gas, concerns remained around achieving low seed counts and production yields were lower than from conventional PPG glassmaking facilities. The PPG-10 process failed to achieve commercial scale-up and proliferation, primarily due to its failure to achieve desired cost benefits. PPG has since donated patent and preproprietary rights to the P-10 technology and equipment to Cleveland State University and is supporting efforts to market this technology to the industry.

During the production operation of these plants flat glass for automotive and architectural products was produced, which suggests that acceptable container glass could be produced in the

system. Applications for the technology might be flat glass, fiberglass, container glass, sodium silicate and specialty glasses. The approach would be particularly attractive where rapid changeover in glass composition is needed and where additives and colorants are being used that are sensitive to the traditional elevated temperatures used in refining.

Development barrier: The PPG P-10 melting system was patented but development was forestalled reportedly because of higher net cost of operation.

IV.4.1. Glass Plasma Melter (Great Britain, 1994)

Plasma melting of glass was explored by the British glass industry in 1994 to compare the efficiencies of electrical plasma-arc and submerged electrode melting of soda-lime-silica glass. The project aimed to demonstrate the energy savings that would be possible from the inherently high melting efficiency combined with the flexibility to operate the furnace at high or low power.

The furnace for the pre-competitive R&D project was built at British Glass by a team of furnace designers and operators from Pilkington, who operated a research furnace of similar size to the demonstration furnace, and Glass Furnace Technology Ltd. (GFT), who had considerable experience in the design and construction of commercial glass furnaces. The Research Group of British Glass and the British Department of Trade and Industry initially funded the project. Subsequent government funding, obtained through the Future Practice Program of the United Kingdom Department of the Environment, was administered by the Energy Technology Support Unit (ETSU).

The furnace built at British Glass incorporated a melting zone 0.6m^2 in area and 400 mm deep. With conventional electrode heating and 100-150kg/h, using plasma in place of conventional electrical firing, the furnace had a throughput of 60 kg/h. Following the melting zone, a riser incorporated electrodes to boost and control the temperature of the glass in the sonic refining stage, which included sonic horns. The depth of glass at this point was 125 mm to allow for sonic treatment of the full depth of glass.

The project successfully demonstrated high melting efficiency. Using the submerged electrodes, an average efficiency of 5 GJ/tonne (4.26 mmBtu/ton) was achieved (GJ/tonne x 0.852=mmBtu/ton). The GJ/tonne from a fossil fuel-fired furnace of a similar size would be approximately 14.5-15.3 mm Btu/ton). Energy losses in the plasma melting due to the greater requirement for water cooling and the greater radiation losses indicated that efficiencies could not equal those of submerged electrodes.

The principal limitations at this time are torch materials and design. The commercial plasma torches used in this project were a less expensive version of the torches used in steelmaking. A cost-projection comparison between commercial plasma torches and conventional electric boosting confirmed that plasma would be significantly more expensive.

Higher energy densities can be introduced with plasma arc melting (250 kVA) compared with submerged electrodes (100 kVA). Plasma melting is, therefore, more rapid than conventional electrical melting. In small tonnage, specialized applications that require intermittent production or rapid product changes, such as frit manufacture and in short-term runs of specialized glasses

or glass components, plasma technology would provide a flexible melting system. (Dalton, D.A., "Plasma and electrical systems in glass manufacturing," *IEE Colloquium [Digest]*, 229, p3/1-2 (1994)).

Some barriers to further development have been materials for construction, insufficient funding, scale-up to commercial production, limited glass composition, and higher net cost.

IV.4.2. Arc plasma melting (Johns Manville, 1980s and 1990s)
In the United States during the late 1980s and early 1990s, Johns Manville investigated arc plasma melting technology to melt E-glass batch as well as E-glass and insulation scrap glass. (U.S. patents 5,028,248 and 5,548,611, Johns Manville.) Melting rates up to 1200 lb/h were demonstrated, though glass quality and process control attributes were not addressed. For business and technical reasons, Johns Manville terminated the project in the mid-1990s, and it has not been commercialized.

IV.4.3. High Intensity Plasma Glass Melting (Plasmelt Glass Technologies, LLC, 2004)
Recent efforts by Plasmelt Glass Technologies, LLC to build upon the considerable JM technology base have begun under DOE/OIT funding. A project—High Intensity Plasma Glass Melting—is being conducted by Plasmelt, a Colorado company formed to execute the research program. Cost share partners for these renewed efforts are Johns Manville and AGY. Although the initial work is being done on E-glass, a common fiberglass composition, the longer term work will be broader and aimed more generally at specialty glass applications. Plasmelt is soliciting interested glass companies to supply other non-fiberglass glass compositions that will be used in melting evaluations in the Boulder, Colorado Lab. These additional melting trials with additional companies are key components of demonstrating the broad generic applicability of plasma melting technologies to non-fiberglass compositions.

This two-year program, which began in July 2003, has as its objective the production of high quality glass using DC transferred arc technology. The technology uses a small rotating skull melter. The melter has approximately 1.2 m2 of melting area and is approximately 0.5 m in depth. With skull melting, glass batch becomes the refractory liner and no water jackets surround the glass melter, so heat losses will be significantly lower. All electrodes are above the glass, avoiding the issues of electrode-glass interactions. However, the transferred arc process forces some of the energy into the glass, making that portion of the heat transfer process nearly 100% efficient. An overall goal of greater than 50% energy efficiency is being pursued at a throughput of 500 pounds per hour. The work is being done on a full-scale melter so that scale up discontinuities do not apply when the 500 lb/hr pilot plant is installed at the first location.

Although current efforts are focused on 500 lb/hr, throughputs of 1200 lb/hr on E-glass batch have been demonstrated with this system. Even higher throughputs are possible on plasma-based scrap re-melting operations in this same melter. Glass quality has not yet been evaluated and the need for add-on refining downstream of the plasma melting unit will be proven or disproven with the work being conducted in this program.

Although the research efforts are still in their infancy, it is quite clear that, similar to the British program, principle limitations are torch materials and design and the development of an overall

stable and controlled operating process. The current research efforts are aimed at demonstrating the relationship between the plasma based melting process and glass quality, energy efficiency, and environmental impact. Initial indications are that this melter would be ideally suited to smaller throughput specialty operations that require high degrees of flexibility in making compositional changes or that chose to run discontinuously. Since the technology is well suited to high temperature materials, additional high temperature materials evaluations will be performed during the program.

Since the British and JM work was conducted over a decade ago, many improvements have evolved in high temperature materials, controls and sensing technologies. In addition, the current plasma project focuses all efforts on the development of a 500 lb/hr production operation. This focus narrows the range for the process research, increasing its probability of success.

IV.5. Accelerated melting

In technology developed for accelerated melting, the batch is never allowed to float undisturbed on the surface of the molten glass. In five of the systems studied, the batch is fed into the burner with the combustion air. In the AGA Scrap Fiber Melter, the flame is tangentially directed into a vertical cylinder where the melting is completed in the thin film as it flows downward. The Vortex system uses a cyclone, which is horizontal. Others use a downward-flowing thin layer in melting. In the FAR process, preheated agglomerates are charged onto the top of an inclined plane, where they are melted by intensive burners. Refractory wear, which is known to be a problem in many thin-layer melters or cyclones, is avoided by mild air-cooling.

In the Sechage, Prechauffage, et Enfournement Directe (SPEED) system devised at Saint-Gobain in 1982, the refractory is replaced by a sloped incline, the surface of which is renewed automatically as the partially melted material slides downward. In the Pilkington melter, the incline remains completely glazed while being fed from behind. The downward flow in the PPG centrifugal melter is controlled by the speed of rotation. Rapid heat exchange can also be obtained by driven systems that stir or otherwise agitate the melt. In the Brichard furnace, the agitation was brought about by immersed burners; the electrically heated melters used in the RAMAR and FARE systems have rotating impellers that produce very high melting capacities. Patents for Ericsson (1988) and McNeill (1990) use infrasound to improve heat exchange between batch particles and the preheated air stream that carries them toward the melter. The advantage of agitated melters is that the melting rate is proportional to a volume rather than to a surface area, and production demands can be met with smaller furnace systems. (These will be discussed later in this chapter.)

IV.5.1. Submerged Combustion Melting (SCM) (Glass Container Industry Research Corp. 1960-1970s)

In the 1960s and 1970s, an era when furnace development focused on increasing production rates in existing furnaces, three trials of SCM were conducted at container furnaces in North America. These trials were sponsored through the Glass Container Industry Research Corp. The combustion equipment was developed by Selas Corporation. SCM has been licensed by the Gas Technology Institute (GTI) in the United States and is being actively developed for a number of commercial applications. Difficulties in applying the SCM technology included burner noise and vibration; low temperatures realized in dissolving sand in premelters used to boost furnace

output. If the technology were to be pursued in high-temperature operations, higher refractory wear rates would be anticipated. While electric generation of Joulian heat is a source of energy, it is costly.

In Submerged Combustion Melting (SCM), fuel and oxidant are fired directly into the bath of molten material to produce mineral melts. In this advanced melting system, combustion gases bubble through the bath, providing high-heat transfer to the bath and turbulence to promote mixing and uniform product composition. By enhancing heat transfer into the glass melt and increasing mixing actions, the glass melting rates are increased.

In SCM, molten materials are drained from a tap near the bottom of the bath, and raw material is fed to the top of the bath. The raw material requires little or no crushing. Two 75 ton/d submerged combustion melters are currently in operation for mineral wool production, one in the Ukraine and another in Belarus. These commercial melters use recuperators to preheat combustion air to 300 ˚C. The melters operate with less than 10 percent excess air and produce NOx emissions of less than 100 vppm (corrected to 0% O_2) along with very low CO emissions. As combustion gases bubble through the bath, the rate of heat is transferred to the bath material to create turbulence in mixing, resulting in a uniform composition of the glass product. (Olabin, Valdimir M., et al., *Ceramic Engineering and Science Proceedings*, 17(2), 84-92 (1996).

Development barriers include materials of construction, insufficient funding, scale-up, limited glass compositions, glass quality and safety.

IV.5.1.2. GI-GTI Submerged Melter (1995)

The Glass Institute–Gas Technology Institute (GI-GTI) submerged melter employs oxy-firing, a deeper bed than the Selas melter, no moving parts in the bath of molten glass, and externally cooled panels instead of refractory walls. The melter is simple, inexpensive and reliable; can be started and stopped for glass composition changes; and has been proven (with other materials) as a high-temperature melter. The deep bed requires fewer burners and better control of melting, compared with the Selas melter. High heat transfer rates and rapid mixing allow for a much smaller melter with glass surface area per ton of glass some eight times lower than a tank furnace. Externally cooled walls further reduce melter size and cost while eliminating 80 percent of the refractory needed.

In the GI-GTI submerged melter, a layer of glass freezes on the inside surfaces of the melter, protecting the walls and enabling melting of any composition, including aggressive glasses. Any glass, including black glass and high melting temperature glasses, can be melted. Thermal efficiency is high in oxy-gas firing mode because the sensible heat method in heating nitrogen by eliminating air is avoided. Heat loss per square foot of wall area is higher than for refractory tank furnaces, but the large reduction in wall surface area leads to an overall reduction in wall heat loss per ton of glass pulled. The wall panel cooling system design can include a heat recovery step that will boost melting. Hot exhaust gas, as in tank melters, can be used to preheat raw material, natural gas or oxygen.

In a 5.5 tonne/day pilot-scale SCM unit that was constructed and operated in GTI's combustion laboratories, the SCM technology is being extended from air gas to oxy-gas firing.

Four test series using oxy-gas burners have been conducted in the pilot-scale submerged combustion melter. Combustion was stable over a turndown ratio of more than 3:1, and the burners were easily started, shut down, and restarted as desired. The coarse feeder was used for all tests. The air-gas burners and the fines feeder have not yet been tested under high-temperature melting conditions. All tests were conducted in batch mode, feeding known quantities of raw material into the melt from the coarse feeder and then producing a bubbling melt in the melt chamber. Sodium silicate, rather than soda ash and silica, was tested to produce a viscous melt. More than 100 kg of sodium silicate was charged, and a product melt was collected.

Several mineral wool compositions and cement kiln dust were also tested to demonstrate the wide range of stable operating capabilities of the SCM unit. This intensified the heat exchange between the products of combustion and the processed material while lowering the average combustion temperature. The intense mixing of the melt increases the speed of melting, promotes reactant contact and chemical reaction rates, and improves the homogeneity of the glass melt product. The melter can also handle a relatively non-homogeneous batch material. The size, physical structure, and especially the homogeneity of the batch feed do not require strict control. Batch components can be charged either premixed or separately, continuously or in portions.

Stable, controlled combustion of the fuel within the melt is critical. Simply supplying a combustible mixture of fuel and oxidant into the melt at a temperature exceeding the ignition temperature of the fuel does not sufficiently stabilize combustion. A physical model for the ignition of a combustible mixture within a melt, as well as its mathematical description, shows that for the majority of melt ignition of a combustible mixture injected into the melt as a stream starts at a significant distance from the injection point. This leads to the formation of cold channels of frozen melt and explosive combustion. To avoid this, GTI has designed several multiple nozzle burners to minimize the ignition distance in one of three ways: 1) by stabilization of the flame at the point of injection using special stabilizing devices; 2) by splitting the fuel-oxidant mixture into smaller jets; or 3) by preheating the fuel/oxidant mixture.

Commercial SCM applications could be extended from mineral wool to a range of commercial products including cement, sodium silicate, fiberglass, and waste vitrification. SCM holds strong promise as the melting step of a glass system, but solutions must be found for the problems of batch handling, integrated melting and fining, heat recovery, process sensors and control, scaling up from 75 tpd, and volatilization.

SCM technology has recently been confirmed for use in the production of high-temperature mineral melts. Five 75tonne/day melters are in operation, two in Ukraine and three in Belarus. The Gas Institute (GI) of the National Academy of Sciences of Ukraine has developed SCM technology.

The insulating materials produced to date in the commercial operations in the former Soviet Union were basalt mineral wool products. The chemistry of this product does not have alkali or borates. In the extension of this technology to alkali and borate glass compositions, researchers should anticipate refractory and air emission challenges not previously experienced.

Development of the Submerged Combustion Melting concept has been hampered by materials of construction, insufficient funding, scale-up, limited glass composition, glass quality and safety issues.

IV.6.1. Advanced Glass Melter (AGM) (Gas Research Institute, 1984)

In Advanced Glass Melter (AGM) technology, flue gases preheat the combustion air by means of a metallic recuperator. The process is based on rapid suspension heating of the batch material and thin-film glass fining using a high-intensity, gas-fired internal combustion burner. The AGM process is a radical departure from the batch melting and glass fining technology used in conventional glass furnaces. Initial engineering in development of the AGM technology was completed for a conceptual 50-tonne/day fiberglass melter.

The performance goals of the AGM were to achieve energy input less than equivalent to 3.2 million Btu/ton, NOx less than equivalent to 4.0 lb/ton, SOx less than equivalent to 1.0 lb/ton, and particulates less than equivalent to 0.2 lb/ton. The system was developed to demonstrate enhanced controllability and flexibility, as well as lower capital and operating costs of conventional fossil fuel and electric furnaces.

The primary steps of the AGM process are:

• rapid suspension heating of the batch components in a high-intensity gas-fired combustor;
• acceleration of the suspension of gas-solids in a converging nozzle that directs flow of the gas-solids at the molten pool;
• impact and separation of the glass-forming ingredients in the molten pool, which is also the site for glass-forming reactions;
• initiation of glass homogenization and fining in the pool configuration.

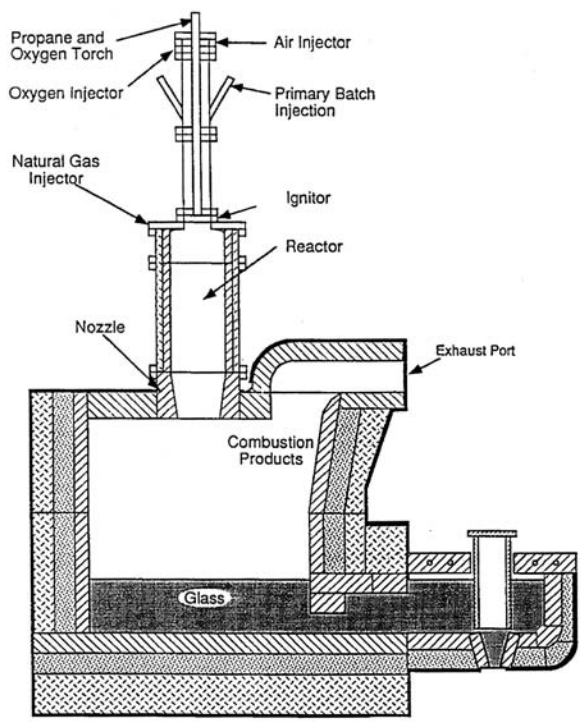

Figure IV.2. GRI's Advanced Glass Melter.

In the AGM melting process, mixed batch, preheated air and gas are injected into the internal combustion burner (combustor) from which the hot particles are projected downward onto the cap of a partially cooled conical refractory center body inside the glass separation chamber. The melt that forms on the cap refines as it flows down the sides of the cone in a thin layer and is collected. From the burner, hot particles and drops of liquid fall onto the cooled cap of a refractory center body inside the glass separation chamber. Melting is completed in the area of impingement and refining takes place in the thin layer of melt as it flows down the sloping sides of the center body. Carbonates of the batch may be injected near the lower end of the burner cavity to avoid destabilizing the flame with carbon dioxide. (Barton, 1993; *Glass Ind.* 1988) (Westra, L.F., Donaldson et al. "How the advanced glass melter was developed," *Glass Industry*, **69**[4] 14-17 (1988))

The objectives in developing the AGM were to conduct feasibility tests of short duration on laboratory scale on an in-flight, rapid glass melting furnace concept; establish a technical basis for an overall systems engineering design; and evaluate economic feasibility of the technology. (Westra, L.F., et al., Glass *Industry* **69**[4] March 1988, 14-17, 40)

The Gas Research Institute began development of AGM in 1984 with Avco Research Laboratory and Vortec Corporation, which originated the basic suspension-heating concept. Feasibility test results from melting a simple soda-lime glass in a 7 tpd AGM research unit verified that totally dissolved silica could be produced, indicating that glass might be produced that would be suitable for insulation fiberglass.

In 1987, a laboratory-scale AGM was developed to produce insulation fiberglass. In this second phase of the program, operating performance was verified and quality levels and control capabilities were assessed for production of insulation fiberglass. In a 13 tpd pilot demonstration unit constructed at the Knauf fiberglass facility in Shelbyville, IN, five tons of commercial-quality wool fiberglass were produced in a trial. The demonstration run was limited to less than 10 days and was shut down due to the challenges that arose:

- Variable feed rate into the combustor: bridging and plugging of batch material hampered temperature control in the AGM chamber;
- Combustor noise: combustor noise exceeded 95 db required workers near the unit to use hearing protection;
- Refractory wear: batch raw materials were deposited on the AGM superstructure; fusing reactions were significant and operating life was expected to be extremely short;
- Exhaust carryover: more than one percent of the batch feed was carried into the exhaust system; high dust in the flue gas could increase difficulty of operation and maintenance of waste heat recovery and emissions control.

Because the AGM furnace is several times smaller than a tank-type furnace of the same production capacity, the structural heat losses from the melter are reduced substantially. A major advantage of AGM technology is its ability to reduce fuel consumption by higher heat transfer to the batch components; rescue structural heat losses; and recover substantial amounts of heat from combustion off-gases. The furnace heat rate of an AGM system is projected to be a total of about 24 percent lower than for a conventional gas-fired furnace.

Glass quality is the greatest concern expressed for the AGM. Carryover difficulties may be serious for chemical homogeneity or refractory stone problems for a larger scale operation. Some manufacturing sectors question whether AGM can produce chemically homogeneous molten glass and be free of seeds and blisters. Another concern with AGM technology is the life of refractories. Most refractories experience chemical reactions at high temperatures when exposed to glassmaking materials, especially alkalis, borates and alkaline earths. The reactions erode the structure, creating contaminants that run down into the molten glass. Batch component carryover and high gas impact velocities in AGM operation are extreme.

This technology might be considered for insulation fiberglass and sodium silicate, glasses in which presence of seeds or other heterogeneity is less critical than other glasses. Once steady state conditions are established for a given pull rate, the reliability of batch feed rate and conditions within the combustor will influence the operation. Batch carryover in the melting chamber will be of concern for the refractory components. AGM could have operational flexibility for rapid composition or color changes as a result of reduced glass inventory, more rapid load change capability, and reduced startup time for the furnace mass.

Adoption of AGM technology is dependent on demonstration of the capability of melting standard rather than fine batch; dual-fuel capability; long-term continuous operation; product quality assurance; negligible volatilization of batch components; and proper interfacing with downstream operations. No plausible approaches have been proposed to address these issues. The AGM system failed to achieve commercial scale up and profitability.

IV.6.2. Nuclear Waste Vitrification (Westinghouse, Savannah River Technologies; Southwest Research Institute; West Valley Demonstration Project; Battelle; 1970s)
Since the 1950s, research and development using glass to immobilize liquid radioactive wastes has been underway. Borosilicate glass, phosphate glass and nepheline-syenite are among the glasses investigated. Requirements for vitrification technology to produce an acceptable glass product are stringent and test the limits of glass melting processes. Processing constraints range from viscosity and melting and liquidus temperatures to electrical conductivity, redox condition of the melt, solubility of noble metals, and sulfur and phosphate concentrations. The chemical durability, crystallinity and glass transition temperature must meet stringent specifications. The most widely accepted and mature technologies for vitrifying high-level waste in borosilicate glass are joule-heated melter and induction melting technology.

Facilities for melting high-level waste containing glass must be designed to operate remotely by robotic controls. Batch components are maintained in shielded walls to minimize exposure of workers to radiation. (Jain, V., "Glass Protects Environment-Contains Radioactive Waste Materials," *the GlassResearcher: Bulletin of Glass Science and Engineering*, Center for Glass Research: Alfred, NY, **12**[1&2] 8-9 (2002-2003))

A ceramic, Joule-heated, slurry-fed melter is in operation at the Defense Waste Processing Facility (DWPF) at the Savannah River Site in Aiken, SC. The control bases for such a melter are unique and complex. The borosilicate hot glass must be able to accept a variety of waste compositions.

Melter controls are extremely sophisticated and must function precisely for melter temperature, glass composition, product durability, waste loading limits, glass redox control, and glass cooling requirements. Melting rates have been increased by the addition of reducing agents such as formic acid, sucrose and nitrates. The exothermic reactions that occur at critical stages in the vitrification process are responsible for the rate increases. Nitrates are balanced by reducing agents to avoid persistent foaming that would destabilize the melting process. Melter residence times are minimized to homogenize glass and assure the acceptable quality of the glass. Research at the Westinghouse Savannah River facility has determined that melters and waste-processing facilities can be reduced in size if mechanical agitation is used to minimize heat transfer requirements for effective melting. A new class of melters has been designed and tested. Melt rates have exceeded 155 $kg \cdot m^{-2} \cdot h^{-1}$with dry feed (1.77 sq.ft. per ton per day). The melt rate is eight times greater than in conventional waste glass melters of the same size. [Bickford, D.F., et al., "Control of radioactive waste glass melters. I, preliminary general limits at Savannah River," *J. of the Am. Cer. Society*, **73**[10], 2896-2902 (Oct. 1990); Bickford, D.F., et al., "Control of radioactive waste glass melters. II, Residence time and melt rate limitations," *J. of Am. Cer. Soc*., **73**(10), 2903-2915 (Oct. 1990).]

Development barriers for broader, commercial application of this technology are materials of construction and insufficient funding.

IV.7. Innovative electric melting technology

Electric furnaces have two shortcomings. The quality of the glass produced in all-electric furnaces is not sufficient for some requirements, such as color TV face plates. Furnace refractories are corroded more rapidly than in combustion-heated furnaces. These two drawbacks to electric melting have been addressed and a number of technologies have been patented. The following examples of innovations in non-conventional melting suggest the variety and extent of research and development in this area. (Barton, ICG, 1992)

IV.7.1. Suspended electrodes (Saint-Gobain, 1986)

One of the main objectives of suspended electrode technology, patented by Saint-Gobain in 1986, was to reduce the temperature of and wear on the refractories at the sides and bottom of a cold-top electric furnace. This was done by choosing a suitable position at which to locate the vertical electrodes that were supported at their upper ends. As the energy is dissipated closer to the batch blanket, higher production is possible for a given throat temperature. By varying the depth of immersion of the electrodes, it is also possible, within limits, to independently vary the output of glass and temperatures. Another possible advantage is the ability to melt glasses whose resistivities are comparable to, or higher than, those of the furnace refractories.

Suspending electrodes from the top of the furnace has several advantages. Temperature can be lower in the bottom and throat. Positions and lengths of electrodes can be changed after startup to adjust the furnace impedance.(Saint-Gobain, Levy, P.E., et al. FP2599734(1986); Barton, 1993)

IV.7.2. Refining zones for electric melters (Saint-Gobain, 1983; Pilkington, 1989; Trevelyan, 1989; Glaverbel, 1988)

The objective of four patents filed in the 1980s for electric melters was to use a special zone or compartment to refine electrically melted glass for the required quality of float glass. Patents by Saint-Gobain (1983), Pilkington (1989), Trevelyan (1989), and Glaverbel (1988) have in common the idea that refining requires an increase in temperature and convective currents to raise the molten glass to the surface and avoid return currents. The differences in each method are the ways in which the currents are organized.

IV.8. Preheating batch and cullet

In the energy-intensive process of glassmaking, much heat is lost through exhaust gases that can otherwise be used to preheat batch and cullet. The basic function of preheating technology is to transfer heat from the glass furnace exhaust gases into the batch and cullet and increase production of the furnace. When batch and cullet and exhaust gas handling are integrated in a preheating system, energy costs can be saved and some emissions can be reduced.

During preheating, the batch can be agglomerated to simplify heat exchange techniques. Fluid beds are adapted and special silos are used. During air preheating, 57 percent of the non-electric glass melting systems surveyed in our study used metallic recuperators.

During the early 1980s, heat recovery technology was of interest to conserve energy due to the high cost of fuel and lack of availability during the energy crisis of the 1970s. Also, boosting existing furnaces to increase production was preferable to the high capital investment of enlarging furnaces. Because research and development of preheating technology was hampered by limited funds and long periods of payback on investment, commercial success of preheating technology was limited. Yet the technology to conserve energy is worthy of study as costs of energy escalate in the United States.

Since the European glass industry has historically been challenged with higher energy costs than that in the United States, more innovative technology has been developed to conserve energy in the glass melting process. In at least seven preheating systems known to be operating on furnaces in Europe greater capital investment and operating costs are justified by the higher value placed on saving energy at the time of this writing.

A number of innovative approaches have been taken to develop preheating systems. In addition to preheating the batch, the temperature of the flame is lowered and NOx generation is reduced. In a LoNox furnace, batch is preheated as it floats on the surface of molten glass with the hot combustion gases, and the cullet is heated when these gases are cooler. In the PPG system, preheating and partial pre-reaction occur in a rotary kiln. (Barton, ICG, 1992)

During batch preheating, useful heat is recovered from furnace as exhaust gases to increase production and conserve energy. By recovering energy with a preheating system, glass producers could reduce furnace utility operating costs (fuel and oxygen) or boost furnace production, thus reducing the unit capital cost of producing additional glass. With batch/cullet preheating to approximately 1000 ˚ F (538 ˚ C), approximately 0.5 mmBtu/ton of glass produced can be recovered in the glass melting process. During preheating, the batch can be agglomerated to

simplify heat exchange technique through adaptive fluid beds and use of special silos. Tecogen Inc. developed a fluidized bed batch preheater system for the Gas Research Institute in the 1980s. GRI then developed a raining bed batch/cullet preheater with a counter-flow heat exchange system. Corning and Tecogen, supported by DOE, developed a raining bed batch and cullet preheater in the late 1990s.

Since the mid 1980s, a number of batch, cullet or mixed batch plus cullet preheaters have been introduced into glass manufacturing. Batch/cullet preheat temperatures of 482-932˚F (250–500˚C) and energy savings of 12 to 18 percent have been realized. Worldwide, 13 batch/cullet preheaters were installed, nine of these in Germany. European manufacturers have shown more interest in preheating systems because they have been faced with higher energy costs. Batch and cullet preheaters have been developed and installed by GEA/Interprojekt (direct preheating), Zippe (indirect preheating), and Sorg (direct preheating). A combined direct cullet preheater and electrostatic precipitator has been developed and installed by Edmeston. The Nienburger process, in which exhaust gases and mixed agglomerated batch are in direct contact in a hopper, has had the most success of all the preheating technologies tried. A combination preheater and particulate capture variation to preheat loose batch-containing cullet is under development by BOC Gases.

When evaluating a preheating technology for application to a glass furnace, a number of issues must be considered.
• Does the unit preheat batch or cullet or mixed batch and cullet? Preheating of batch or cullet separately reduces the economic benefits and complicates the material handling systems.
• Does the unit constrain the batch/cullet ratio? Glass makers need to be flexible with batch/cullet ratios to meet constantly changing requirements of manufacturing.
• Does the unit increase pollution loading in exhaust gases, such as increased dust? Manufacturers in few countries will allow emissions to increase above current levels.
• Does the unit treat exhaust gases to best standards for particulate and SOx emissions? If not, an expensive post-process abatement device must be installed on the exhaust gas handling system.

IV.8.1. E-batch (BOC Gases, 2001)
Electrostatic batch preheating technology, or "E-Batch," uses the waste heat from furnace exhaust gases for preheating batch and cullet to provide a simpler and lower-cost means of melting glass than conventional air-fuel furnaces when they are fitted with air pollution control systems. Developed by BOC Gases in 2001, the technology is unique in two ways. (1) It is designed to be integrated with oxy-fuel-fired furnaces. (2) It incorporates exhaust gas cleaning to the most stringent regulatory levels. The proprietary electrostatic mechanism (patent pending), which retains batch in the unit with occurrence of virtually no batch entrainment, is the key feature of E-Batch technology. (Alexander, Jeffrey C., "Electrostatic batch preheating technology: E-Batch*," Ceramic Engineering and Science Proceedings*, **22**[1], 37-53 (2001))

In this system, particulate matter is precipitated from the furnace exhaust gases and deposited onto the batch surface. As a result, cooled outlet gases are recirculated to temper the hot furnace gases to about 1148 ˚ F (620 ˚ C). The E-Batch design has a low enough pressure drop to operate under natural draft from a stack that is appropriately designed. Cleaned, cooled gases are discharged into the atmosphere through the stack, in which the pressure is controlled by a

damper. The most stringent regulations for particulate emissions are met with the E-Batch design.

So that less energy is needed by the furnace, raw material batch plus cullet can be preheated up to 932˚F (500˚C) prior to charging into a glass melt. Preheating humid batch or cullet provides additional savings in energy because water evaporates outside the furnace. Additional savings in cost of electricity per ton of molten glass can be obtained by using preheated batch and cullet because the pull of the furnace is increased and the amount of electric boosting needed to pull glass out of a furnace is decreased.

The greatest savings can be obtained by increasing the pull at the same thermal load of the furnace. Loss of wall heat per ton of molten glass will decrease because more glass will be melted in the same tank volume. Without increasing the pull or lowering the boosting capability, lower furnace temperatures can be realized while increasing the lifetime of the furnace. Reducing temperatures can often be prohibited when the quality of the glass product does not meet required specifications.

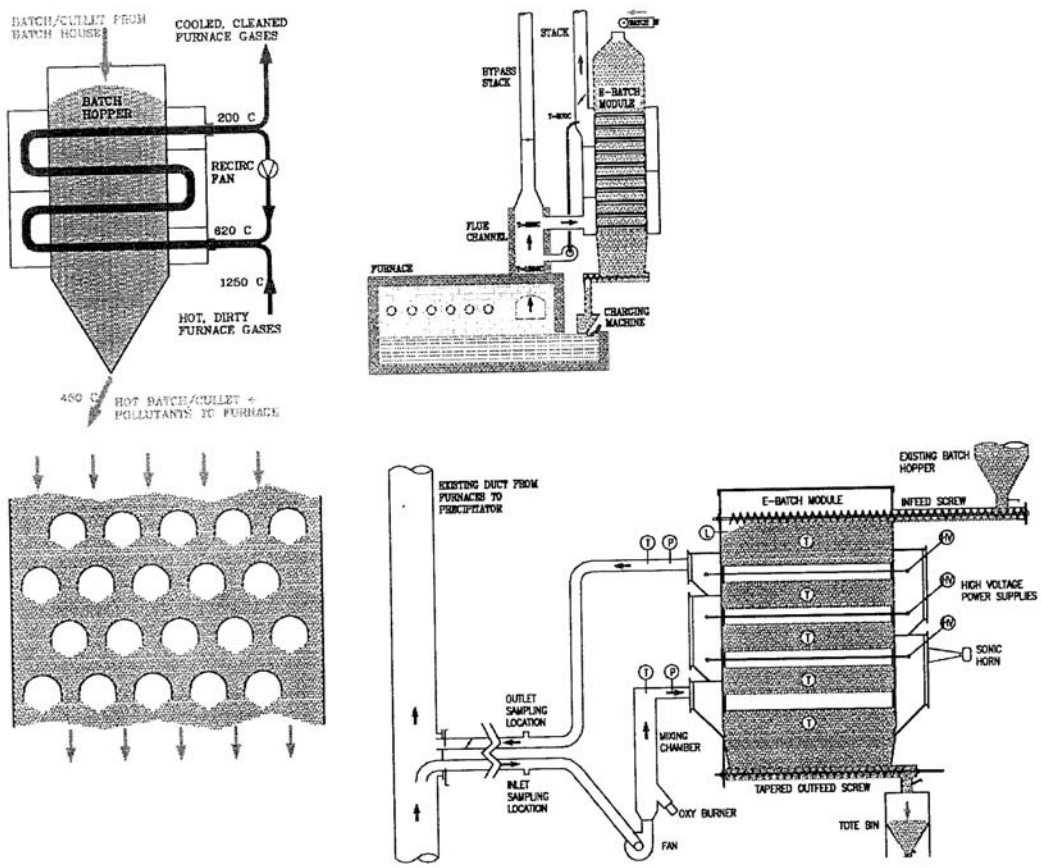

Figure IV.3. BOC E-Batch Design.

Batch is delivered by conventional material handling methods to the E-Batch module, which includes a reserve capacity above the active section. This allows for continued operation of the furnace during a failure or maintenance of the material handling mechanism. The module, a

square or rectangular hopper located adjacent to the doghouse, features a discharge feeder to ensure mass flow of batch and cullet. Heated material is fed out of the bottom and delivered to the furnace in a continuous flow down through the silo, unlike conventional material handling equipment that maintains the batch level of the silo in a nearly full condition.

Furnace exhaust gases flow through the batch in horizontal channels, which are formed by rows of open-bottomed tubes in the silo. Gases from a given row are collected in a plenum at the side of the hopper and directed up to the next row of tubes. They pass through the silo in a serpentine path to create a cross/counter current flow with the batch as it moves downward. Because the tubes are open-bottomed, the batch forms a free surface by its angle of repose at the bottom of the channel. Since hot, flowing gases are constantly in direct contact with the surface of the fresh batch material, heat transfer rates are many times greater than those achieved by indirect heat transfer. Chemically reactive batch constituents (soda ash) react with SOx in the gases. This forms sodium sulfite and sodium sulfate solid products that remain in the batch, partially removing SOx from the gas stream and scrubbing the gases. Reactions with HCl and HF are also possible. However, direct contact causes entrainment of fine batch dust in the flowing gases and increased loading of particulate in the exiting gases. This requires additional cost for installation of downstream gas cleanup equipment. This electrostatic mechanism (patent pending), which is peculiar to the E-Batch technology, precipitates particulate matter from furnace exhaust gases and deposits it onto the batch surface, where it is delivered to the furnace with the heated batch. This meets the strictest regulations for particulate emissions.

BOC Gases installed a 14.4tpd E-Batch module in a slip stream of exhaust gases from the four operating oxy-gas fired furnaces at Gallo Glass (Modesto, CA). Actual glass batch was fed into the unit, although the preheated batch/cullet was not directly fed into a furnace, to evaluate issues involving oxy-fuel, particulates, operation with cullet, maintenance and cleaning methods, cold start-up procedures, and engineering parameters. With no device for air preheating, the inherent exhaust gas temperature of oxy-fuel furnaces is quite high. Thus the inlet temperature for the E-Batch, although limited by the sticking temperature of the batch, can be chosen by the designer. Hot exhaust gases from the furnace are tempered in the flue channel with cooled gases re-circulated from the stack. The amount of re-circulated gases is controlled so that the inlet temperature to the E-Batch module is about 1148 ˚ F (620 ˚ C), or as high as possible while not exceeding the sintering temperature of the batch and cullet. Air could also be used for the tempering, but re-circulated gases, rather than air, are preferable.

Initial advantages of the E-Batch preheater over other types have been suggested, as follows.
• Batch and cullet in any ratio and cullet of any normal size criteria can be handled in norms considered optimum for the glass melting process.
• The E-Batch module can be adapted to any conventional material handling and furnace charging equipment.
• All the desired functions can be achieved with one box rather than with a train of devices through which gas flows in a series.

A proof-of-concept bench-scale unit in the laboratory had initially suggested that:
• velocities for heat transfer are optimum;

• electrostatic collection is efficient;
• batch moisture is at a maximum.

BOC has been scaling up efforts to confirm the applicability of combining preheating of batch and cullet with furnace exhaust gases to collect particulate and acid gases. Development of the technology has been hampered by insufficient funding, scale-up, reliability and limited glass composition. E-Batch technology offers a simple and low-cost means of melting glass for conventional air-fuel furnaces that are fitted with air-pollution control systems.

IV.8.2. Nienburger Glas Batch Preheater (1987)

Of all the preheating technologies explored, the Nienburger Glas Batch Preheater has been the most successful. In this system, furnace exhaust gases and a batch and cullet mixture are in direct contact inside a hopper. In the five installations in German glass facilities, furnace energy savings of up to 29 percent were reported.

The heat content of hot waste gases from the melting furnace directly heats the raw materials, batch and recycled cullet together in the preheater. Recycling waste heat back to the furnace is a very effective way to conserve energy in the glass melting process. The waste gases flow through the material in a rectangular mixed batch storage bin in which several levels of channels are open on the bottom. Inside a hopper, furnace exhaust gases and a batch and cullet mixture are in direct contact.

All raw materials are weighed and mixed prior to delivery to the preheater device. Located directly above the batch charger, this device acts as the mixed batch storage bin for the melting furnace. The hot flue gas from the furnace travels up through several layers of open-bottom ducts in a counter flow configuration relative to the batch being drawn downward as it is fed into the furnace. During the process, the alkaline components in the batch partially neutralize acidic gases in the waste gas stream.

Started up in December 1987, the first Nienburger batch preheater operated continuously for a 1.2 million tonne campaign ("tonne" refers to a metric ton [1000 kg], as opposed to a "ton" or "short ton," 2000 lbs.; therefore 1 tonne = 1.1 ton).

In March 1991, a second unit was installed on a new 330 tonne/day furnace and has remained on line over 99 percent of the time. In 1992, a third unit was commissioned as a greenfield furnace. It started up in August 1995 with a 400 tonne/day batch preheater and a McGill electrostatic precipitator.

In February 1997, a "Gerresheim" oxy-fuel converted furnace was then built with a preheater, incorporating the design as developed during the previous installations. Using the Nienburger Glass process, batch preheating results in a certain amount of batch-dust carryover from the direct contact between the hot flue gases and the batch. A downstream electrostatic precipitator must be used to capture this fugitive dust as well as the fine particulate from the furnace. Although the Nienburger Glas batch preheater cannot be considered a particulate control device, it does reduce the emission of SOx, HCl, HF, as well as selenium from flint glass.

After operating for over 12 years, the Nienburger Glas batch preheating process has demonstrated:
• operations on end port, side port, and oxy-fuel container furnaces;
• no concerns for glass quality with green and flint container glass melting;
• energy used by the furnace was reduced by over 20 percent from conventional systems**;**
• proportional reductions of NOx and CO_2 by reduced fuel requirement;
• direct contact with batch results in collection of SOx, HCl and HF;
recovery and recycling of sulfates and selenium.

IV.8.3. Fluidized Bed Batch Preheater (Gas Research Institute and Tecogen Inc.; early 1980s)

In the Fluidized Bed Batch Preheater, hot furnace exhaust gases and supplemental energy from gas firing were used to preheat glass batch without cullet. Developed by Tecogen Inc. for the Gas Research Institute (GRI) with co-funding by Southern California Gas Co. in the early 1980s, a preheater demonstration unit was installed on a container furnace owned by Foster Forbes Glass (Milford, MA).

This preheater was designed to use hot furnace exhaust gases and supplemental energy (from gas firing) to preheat glass batch without cullet. Particulate condensation on the fluidized bed grid and material flow rate control created technical problems during operation. Too much space was required for the retrofit installation of the preheater to satisfy manufacturers. When batch carryover corroded the superstructure refractories, products of the corrosion (stones) contaminated the glass, and the project was abruptly terminated. In addition to the problem with refractory materials, funding was insufficient and scale-up, reliability, limitation of glass composition also made the technology less than feasible.

The preheater had a design capacity of 165 tons per day of batch and produced 250 tons of flint glass per day by using a cullet ratio of about 40 percent and 1200 KVA of electric boost. The technology showed promise as an energy conservation device, as well as an emission control device. (Hibscher, C.E., et al., *Glass Industry*, **67**[2], Feb. 10, 1986, p. 8-10)

IV.8.4. Raining Bed Batch/Cullet Preheater (GRI)

GRI subsequently developed a raining bed batch/cullet preheater with a counter-flow heat exchange system that could preheat the glass furnace charge with hot flue gases or supplemental combustion heating. The goal of this project was to demonstrate that raining bed preheater technology could improve the overall economics of commercial glass melting.

Hot combustion gases from natural gas-fired burners, which were separate from the furnace, were introduced at the bottom of the heat exchanger. Recycled glass, introduced at the top of the heat exchanger, was heated as it fell; discharged from the bottom of the preheater; and fed to a furnace charger. The cullet fines that were carried by the exhaust gas out of the top of the preheater were captured in a cyclone and returned to the preheater discharge. The upper preheat temperature was limited to 1150 ˚F (621 ˚ C). by softening and sticking of the recycled glass.

Two demonstration units were installed to test the raining bed preheater technology.
1.) A 5 tpd pilot unit was tested for 48 hours at Thermo-Power in Waltham, MA, and showed:

- soda-lime batch/cullet could be preheated successfully to greater than 1000˚ F (538˚C);
- a 1300 ˚ F (704 ˚ C) gas inlet and 280–380 ˚ F (138–193 ˚ C) gas outlet;
- the system could be integrated in association with an operating glass furnace;
- particulate loss from the preheater exhaust cyclone was <0.02% of the feed to preheater.

2.) The second demonstration, conducted on a soda-lime container furnace at Foster-Forbes in Milford, MA, showed:

- the furnace-firing rate was reduced by 10 percent;
- cullet preheat temperatures over 740 ˚ F (393 ˚ C);
- furnace temperature control was difficult;
- glass quality was not satisfactory.

Raining bed batch and cullet preheater technology was pursued by Corning Incorporated and Tecogen, with support by the DOE, in the late 1990s. Corning determined of the eight batch and cullet technologies available that the raining bed required the least capital and had the best opportunity to be accepted by the US glass market. When Corning chose not to continue business activities in this area, Praxair continued to develop the technology, believing that a successful demonstration would help lower operating costs of oxy-fuel furnaces. Praxair discontinued support of the project in late 2000 when installation of a unit at Leone Industries in Bridgeton, NJ, was forestalled due to permitting issues with the US Environmental Protection Agency (EPA). Changes in the configurations of the exhaust systems of existing furnaces are now interpreted as "modified sources," New source reviews are triggered by the EPA interpretations, and application of Best Available Control Technology (BACT) may not be feasible on some furnace configurations even though they may save energy. The most identifiable problems with raining bed preheating were materials of construction, insufficient funding, scale-up, reliability and limited glass composition.

IV.8.5. Counterflow-crossflow Plate Cullet Heat Exchanger (Zippe, Germany, late 1980s)
A counterflow-crossflow plate cullet heat exchanger, developed by Zippe of Germany in the late 1980s, separates flue gases and the cullet with steel plates so that they have no direct contact. A separate cullet bin is required. Flue gases and batch mixture are separated by steel walls, minimizing pressure losses of the exhaust gases but not capturing particulate or acid gases in the batch. Hot waste gas flows through individual module ducts and is directed from the bottom to the top by corresponding air diversion funnels. The gases are cooled from approximately 1020 ˚F (549 ˚ C) to 400F (204 ˚ C). The cullet is heated to 660 ˚ F (349 ˚C) as it flows downward in adjacent modules.

The problem of fine particle entrainment with direct heating of loose batch was addressed by pelletizing, or briquetting, the batch. This solution is possible when low sulfur fuels are combusted, but not higher sulfur fuel that can be picked up by the batch and saturate the glass to form free sulfate on the melt surface. (Zippe, B-H, Glass, 1990, 67 [5] 1993; Barton Glass Tech., 34 [5], Oct. 1993) [Note: Owens Corning Fiberglass averted this problem by using ceramic balls as a heat exchange medium in an indirect batch preheat system. (Zippe B-H, *Glass* 1990, 67[5])

The modular design of the device makes for easy access to condensates for cleaning, but caused problems during operation. The Zippe indirect preheating device is in operation on furnaces in Europe, particularly in glass container furnaces in Germany, Switzerland and the Netherlands. (Barton, 1993) (Zippe B-H, *Glass*, **67**[5] (1990)

IV.8.6. Electrified Cullet Bed (Edmeston, Sweden, 1990)

The Electrified Granulate Bed (EGB), a hybrid filter system, uses the cullet bed as a filter for waste gases. The system combines an electrostatic precipitator that removes dust with a direct cullet preheater. The hot waste gas enters the top of the system and passes through an ionizing stage, imparting an electrical charge to the dust particles. The gas then passes into a bed of granular cullet, which is polarized by a high-voltage electrode immersed in the cullet bed. The charged dust particles are attracted to the cullet, where they are deposited. The cullet is constantly being added at the top of a shaft from which it is removed at the bottom. The preheated cullet (up to 752 ˚ F [400 ˚ C]) and the attached particulates are charged into the furnace.

In 1994, the Irish Glass Bottle Co., along with the British Glass Manufacturers Confederation and Edmeston GmbH, received a Thermie grant from the European Commission to develop this innovative cullet preheating process. The system developed by this group incorporated an electrostatic principle to collect furnace particulate onto the cullet that was fed to the furnace. Like the Zippe system, this device requires a separate cullet bin. Since the exhaust gases must be passed through a bed of cullet about 12 to 18 in. thick, the cullet must be of a reasonable size to minimize the pressure drop through the bed. Cullet preheat temperatures above 1292 ˚F (700 ˚C) have been realized, and particulate is recaptured with the system. A second unit installed on a new oxy-fuel furnace at Leone Industries in the United States has met New Source Performance Standards (NSPS) standards for particulate control. (McGrath, J.M., "Preheating cullet while using the cullet ed as a filter for waste gases in the Edmeston heat transfer/emission control system," *Glass Technology*, **37**[5], 146-150 (1996))

IV.9. Non-conventional melting systems

Methods of combining melting and refining in non-conventional melting systems have been explored extensively both in the United States and Europe. Attempts to design innovative glass melting processes for melting and refining have generally segmented the melting process into distinct steps that incorporate driven systems to increase dissolution of sand particles and initial gaseous evolution from raw materials.

Combined melting-refining systems explored over the past 25 years include the Rapid Melting and Refining (RAMAR) by Owens Illinois; Fusion et Affinage Rapide (FAR) system by Saint-Gobain; Fusion et Affinage Rapide Electrique (FARE) system by Saint-Gobain; and the PPG P-10 system. (See details of these technologies below.)

Since traditional glass melters rely on natural convection for internal melt movement, the melters are very "fragile." Critical convection patterns are strongly affected by minor changes in inputs, largely changing product quality. More robust melters are needed to allow a stirred chemical reactor in which convection is controlled directly. Controlled stirring forces can counteract the forces created by thermal and compositional gradients and by release of gases. Owens-Illinois

pioneered the RAMAR system of mechanically stirred melter and centrifugal finer. Some of its essential features could be considered for future melters.

IV.9.1. Rapid Melting and Refining (RAMAR) [Owens Illinois, 1972]

The RAMAR (Rapid Melting And Refining) project is a small, high-speed, electric glass melting and refining system developed by Owens-Illinois between 1967 and 1973. In this system, the melting and refining process is separated into three discrete steps that are carried out in three modules: a Macro Mix Melter, a Micro Mixer, and a Centrifugal Refiner. Equipment was designed especially for the project.

The RAMAR system demonstrates that high level shear can be exchanged for time and temperature in glass melting in the conventional melting process. The upper size limits of the Macro Melter were initially restricted by limitations on electrical power distribution, and the Centrifiner had limited scale ability and needed work on the rapid refining process. But Associated Technical Consultants Inc. has subsequently developed solutions to circumvent these problems.

Originally, the system functioned as designed except for the reboil in the Micro unit when the electric boost was on. Container glass was melted at optimum temperatures between 1950 and 2600 ˚ F (1066 and 1427 ˚ C). Temperatures were typically 2350 to 2450 ˚ F (1288 to 1343 ˚ C), and pulls were normally in the 12 to 16 ton/day range. This represents a 100 to 200 ˚F lower molten glass temperature as compared to conventional container glass furnaces.

Glass homogeneity initially exceeded that of container glass melted in a conventional furnace, but the glass had a grayish color due to the presence of micro seeds of 0.0001 in. in diameter and numbering 10,000 per ounce. These seeds are unstable due to their high internal pressure caused by surface tension, and are not seen in conventional melts. The low-temperature, high-shear, short-time RAMAR process seemed to prevent the normal Ostwald ripening and consequent elimination of the micro seeds. These seeds may or may not have affected glass strength, but the process was changed. The settling tank was substituted for the Micro unit, increasing the holding time-temperature history of the glass and reducing the micro seed count to fewer than 200 per ounce. When this glass was hand blown into thin glass bubbles, clarity and smoothness were excellent; homogeneity was confirmed by Shelyubskii measurements.

RAMAR system steps

• The Macro Mix Melter introduces most of the energy needed for melting and accomplishes most of the large scale reactions by dispersing the batch through high-intensity mixing action in a high-powered electric melter. The melt space was a 2 ft. cube with a 6 in. by 6 in. outlet notch and trough in one side. Four 1 1/4 in. molybdenum electrodes were inserted through the bottom. A water-cooled steel shaft was mounted vertically on the centerline and an 18 in. diameter, four-bladed molybdenum propeller was attached to the end of the shaft, adjusted vertically and driven by a variable-speed, 10-horsepower motor. The batch chargers and auxiliary gas burners were inserted into a split cover about 6 in. above the melt chamber.

A single-phase 600-KW saturable reactor supplied the power. One leg was connected to the rotating propeller shaft through graphite blocks and the other was connected to all four corner electrodes. The unit was a continuously stirred tank reactor.

A typical low-level pull of 12 tons/day might use 240 volts, 1450 amperes, and 200 RPM and operate at 2350 ˚ F (1288 ˚ C). The batch stream was attenuated by the high surface velocity of the melt. The melt was very foamy with densities as low as 40 percent of normal glass. As a result, the batch sank into the melt to be further dispersed by the propeller.

The rapid-response power supply was controlled by a thermocouple in the melt, so with any step increase in batch feed rate, the power increased nearly instantaneously with no temperature loss in the system. Maximum tested throughput was 18 tons/day, limited only by downstream processing equipment. With the low density, average residence (holding) time in the melter was short, typically 20 to 40 minutes for the normal operating range. As expected with a highly mixed system, batch materials were found in the output stream. At 2450 ˚ F (1343 ˚ C) temperature and 20 minutes residence time, about 3 percent partially reacted sand grains were observed. Higher temperatures or increased residence times decreased the amount of residual sand grains found.

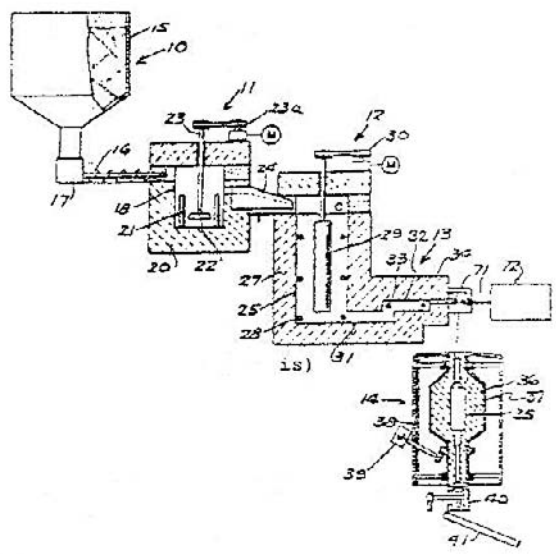

Figure IV.4. Rapid Melting and Refining (RAMAR)
Owens-Illinois (pellet et al. 1973; Barton, 1993).

• The Micro Mixer unit was designed on the micro scale process of homogenization. A 2ft.-diameter, 5ft.-deep cylindrical chamber contained an 8in.-diameter, 50in.-long molybdenum cylinder, located on the center line. The cylinder could be rotated up to 100 RPM by a three-horsepower variable speed motor. Horizontal electrodes compensated for heat losses and temperature adjustment.

This unit functioned mechanically, but chemical results were unacceptable. The unit was operating as a back mix reactor with a recirculation loop. Reboil from the electrodes caused a stream of glass to circulate from the bottom to the top of the unit. The problem was avoided with

limited power inputs and the unit then produced very homogeneous-foamy glass. Later the Micro Mixer was replaced with a more satisfactory holding tank, 24 in. wide by 24 in. deep by 66 in., with sidewall electrodes for temperature adjustment and heat losses. The output was a homogeneous seedy glass.

• The Centrifugal Refiner was designed to remove seeds and bubbles rapidly from the glass without using chemical refining agents. The normal bubble rise that results from density differences between the glass and the gas bubble is directly proportional to the gravitational force, normally 1G. The G force enhancement by means of a centrifuge offered the most potential for rapid seed removal.

The Centrifiner's vertical axis inlet and outlet was operated with a 14 in. diameter, which had been designed for a 24 in. diameter hot zone. The inner chamber was about 4-feet long with inlet and outlets about 1.5 feet long. Heat losses caused temperature drops of 100 to 150˚F in the glass and were dependent on pull rate. The unit was tested at a maximum temperature of 2600˚F (1427˚ C). A platinum slinger placed in the top inlet caused the inlet stream to move horizontally to the top wall of the unit. A platinum diverter plate was located near the bottom, with holes located at the wall to allow glass with high G-force, time histories to move to the bottom exit tube. A stationary spindle decelerated the spinning glass column and moved vertically to control the flow rate.

Seed removal was controlled by rotational speed, viscosity (temperature), time (pull rate), and seed size. Seeds above a certain size are removed and smaller seeds pass through. The operating design parameters were selected to remove seeds above the normal minimum of about 0.004 in. at flow rates up to 19 tons/day. When operated at normal speed of 1100RPM, 240 G forces developed at the 14 in. diameter. (Richards, Ray S., "Rapid Glass Melting and Refining System," *Advances in the Fusion of Glass*, American Ceramic Society: Westerville, OH, 50.1-50.11 (1988))

Table IV.I. RAMAR compared to conventional melting systems.

Standard Furnace	**RAMAR**
30 hr. Mean Resident Time	20 Times Faster
Mixing–8 ft. per hr.	2000 Times Faster
Heat Transfer by Radiation/Convection	Direct Electric–100 Times Faster
2900 ˚F (1593˚C) Peak Temperature	2500 ˚ F (1371 ˚ C) Little Refining Agent
NOx Pollution	No NOx Pollution
SO_2 Pollution	No SO_2 Pollution
Bubble-See Rise-1/2 ft. per hr.	240 Times Taster
Large Furnace Size	20 Times Smaller

Owens-Illinois did not move into production scaleup because of technical limitations associated with the centrifigual refining device. The 12-ton capacity of the RAMAR was insufficient to serve a typical IS machine that requires an 80 ton capacity.

IV.9.2. Fusion et Affinage Rapide (FAR) (Saint-Gobain, 1974)
The Fusion et Affinage Rapide (FAR) system combines flame fusion and electrical refining. (Mattmuller, R., et. al. FP 2 281 902 [197]; Barton, 1993) Preheated by furnace gases that have passed through a recuperator, an agglomerated batch with caustic soda as a binder drops onto an inclined hearth. Rough melted by flames from a set of intensive burners, the melt falls into an electrically heated refining compartment where a permanent state of convective foaming is maintained by the presence of solids and bubbles. The strongly heated melt contains sulfate. Any remaining large bubbles rise to the surface in the second refining compartment.

Barriers to further development of FAR were materials of construction, reliability of the method, and glass quality.

IV.9.3. Fusion et Affinage Rapide Electrique (FARE) (Saint-Gobain, 1984) The Fusion et Affinage Rapide Electrique (FARE) system replaces the flame melter of FAR with a single stirred electric melter. (Barton, J.L., et al. Euro PO 135 446 (1984)) Total residence time for melting, "boiling," and clearing compartments is about one hour. Except for the position of the exit, FARE works on principles similar to FAR and RAMAR systems. All gases from the melter and foaming zone escape through the batch charger, which doubles as a heat exchanger and SOx scrubber.

Development barriers of FARE were materials of construction, scale-up, and reliability.

IV.9.4. Cyclonic melters
Cyclone furnaces with their short residence time and rapid heat exchange have been proposed for use in preheating the batch materials of sand, lime and dolomite before they are brought into contact with fused sodium carbonate. In a cascade of cyclones at a temperature well above the melting point of soda ash, the components are melted separately and mixed with hot solids in an original venturi system that projects the mixture downward into a separation chamber. Hot gases escape from this chamber through the cyclones and the recuperator, preheating the air for the main burner, which is placed in a refractory-lined cyclone. (Battelle's Pyroflex, 1991) (Anon. *Glass Intern.* (1991), [6] 39–41); Barton, 1993).

Development barriers to cyclonic melters have been materials of construction, scale-up, limited glass compositions, and glass quality.

IV.9.5.VORTEC Cyclone Melting System (Vortec CMS, 1991)
The Vortec cyclone melting system, a preheating/melter design, injects fuel, batch and air into a first cyclone, a counter-rotating vortex combustion-preheater. Solids suspended in hot gases are ejected into a horizontal cyclone melter. The material is ejected with the combustion gases into a separation chamber on which the recuperator that heats the combustion air is mounted. For this technology, coal might be used as a fuel, or gas produced by a cyclone gasifier may be used. [*Glass Production Technology Int'l*, Sterling Publications Ltd. (1991) (Barton, 1993)]

These cyclone melter devices are frequently noted in the Russian glass technology literature. (Chubinize, 1989) A sophisticated system, the vertical vortex combustor is similar to that used

by the Advanced Glass Melter developed by the Gas Research Institute, and is designed to accept all types of fuel: gas, liquid, pulverized coal or coal slurry.

IV.10. Innovative technology for emissions reduction

A number of attempts have been made to develop technology to reduce emissions that result from glass manufacturing processes. All-electric melting eliminates most air emission concerns, but it is not always an economically practical solution in glassmaking. Use of electric power rather than fossil fuels to comply with environmental regulations is rarely economical and can be technically hazardous. Some add-on technologies can curtail emission rates of NOx, SOx, particulate, CO, halides and heavy metals from fossil fuel furnaces, but add cost and no product value. Yet glass makers prefer some process revisions that add costs and show compliance, although capital investment is lower. Control techniques for solid emissions and SOx have included electrostatic filters, bag-houses and scrubbers, techniques that have little impact on the furnace operation. To control NOx emissions, glass manufacturers have treated with ammonia injection, use of pure oxygen and progressive combustion or other radical changes in the combustion technology. (Barton, XVI ICG, 178-9, [1992])

Two innovative techniques that require slight to major modifications to furnace design are the Körting Gradual Air Lamination and the SORG LoNox Furnace. The Körting process increases the oxygen in the combustion flame, while the SORG process cools the combustion air from the regenerators to address the high thermal efficiency, thereby reducing NOx generation, particularly in container-glass furnaces. (Barton, 1992)

IV.10.1. Körting Gradual Air Lamination (Widemann, 1987)

The objective of Körting Gradual Air Lamination is to reduce NOx formation. This system applies to end-fired furnaces. Combustion air is added progressively to an initially oxygen-poor flame. At the top of the regenerator chamber, a fraction of the preheated air is extracted by a high-temperature venturi. This air is carried to the opposite end of the furnace through a ceramic duct and injected into the flame at several points as it turns in front of the end wall (Korting Gradual Air Lamination). (Barton, 1992; Wiedmann, U. Euro P O 305 657, 1987)

Similar technology, OEAS, developed by the Gas Technical Institute and commercialized by Combustion Tec, uses a retrofit technology for air staging with existing burner configuration to reduce NOx.

IV.10.2. Sorg LoNox Furnace (Pieper, 1989)

The LoNox furnace was developed by Nicholaus Sorg GmbH and Co. KG, West Germany, to reduce NOx and other pollutants without adding on pollution controls or sacrificing melting or energy performance. To reduce NOx generation, the Sorg LoNOx furnace uses much cooler combustion air than that produced by other furnace regenerators, which are responsible for the high thermal efficiency of container glass furnaces. In the Sorg LoNOx furnace, batch is preheated as it floats on the surface of molten glass with the very hot combustion gases; the cullet is heated when these gases are much cooler.

Preheating of the batch, the inside of the furnace, the gas, and the cullet compensates for the reduced preheating of the air. Burners are located in the melting zone only. The combustion

gases leave this compartment and give up their heat in four stages. First they flow upstream through a preheating zone where they heat the batch floating on the surface. They leave the furnace through radiant recuperators that heat the combustion air, and then enter convective recuperators that preheat the gas. Finally, they are passed through a preheater for cullet. A special tank design includes a shallow melting area with bubblers, a preheating zone with a sloping bottom, and a deep refiner.

The first installation of the LoNOx melter was a 200-metric ton, natural gas-fired container furnace at Weigand Glas Steinbach, Germany, in late 1987. This somewhat complex furnace design has been successfully introduced for tableware and container glass melting. (Moore, Ronald H., "LoNOx melter shows promise," *Glass Industry*, **71**[4], 14-18 (1990))

IV.11. Conclusion

Continuous glass melters in operation today have evolved from the basic design of a furnace created by the Siemens Brothers of Germany in the middle of the 19th century. Improvements to the melters have been efficient and reliable enough that the Siemens furnace technology has continued to serve the needs of glassmakers. But the high capital costs for building or rebuilding, limited flexibility of operation, high costs of fuels, and environmental regulations have catalyzed efforts to seek new glassmaking technology.

Over the past 30 years, major innovations have been developed for glass melting but with varying degrees of success. The fragmentation of glass manufacturing into the four major segments of float glass, container glass, fiberglass, and specialty glasses has made for the development of numerous technologies. As advancements have been made in refractory materials, instrumentation and computer modeling, state-of-the-art equipment, firing techniques, and fuel replacement, many of the technological developments in this area are worthy of reconsideration. Selected technologies are presented in detail for reference and further study by glass manufacturers.

The objectives of research and development for innovations in glass manufacturing have been to replace or renovate combustion heated furnaces to comply with clean air laws; recycle glass industry wastes and used glass products; develop electric melting facilities with longer furnace life and improved glass quality; and replace melting tanks with smaller, less expensive, more flexible melters. Particularly in the last half of the 20th century, glass scientists and engineers have explored all aspects of the glass melting process—preheating batch and cullet; melting with preheating systems; nonconventional melting systems, regenerative, recuperative, electric, oxygen-fuel; waste vitrification; refining; and emission control systems. Of the innovative technology developed and tested, some has found its way into the mainstream of glass manufacturing. Others have been set aside for lack of funding for continued development, inadequate materials for construction, scale-up problems, unreliability, limitation of glass compositions that could be processed, lack of process control, production of poor glass quality, safety issues, high net cost or environmental failures.

Innovations in glass melting systems have involved melting and refining by conventional and non-conventional means. A segmented furnace system has been suggested as the most feasible alternative to continuous tank furnaces. Segmented systems explored by TNO in the Netherlands

and PPG Inc. in the United States address the problem encountered by continuous tank furnaces of recirculation flows into the melting tank that limit or, which limit the maximum residence time of molten glass in the tank. The key components of the segmented system that offer the greatest promise are batch preheating, driven dissolution in the fusion process, and innovative refining. The PPG P-10 process is one of the most revolutionary advances in glass melting of the 20th century. This system optimizes each phase of the glass fusion process, combining techniques for melting, refining and homogenizing soda-lime glass. In addition, it was designed to be nonpolluting and minimize residence times. The British Glass industry designed the Glass Plasma Melter to demonstrate energy savings in manufacturing soda-lime silica glass.

Accelerated melting systems have been designed to agitate the batch so that it never remains undisturbed on the surface of molten glass. Innovative approaches have been taken to develop melters that have a melting rate proportional to a volume rather than to a surface area and will allow production demands to be met by smaller furnaces. Among these innovative technologies are Submerged Combustion Melting (Glass Container Industry); GI-GTI Submerged Melter; Advanced Glass Melter (Gas Research Institute); and systems for nuclear waste vitrification. To address the shortcomings of electric furnaces, i.e., glass quality is insufficient and furnace refractory corrosion, a number of innovative technologies has been patented. Among these technical innovations are suspended electrodes and refining zones for electric melters.

Batch preheating has been an area of considerable study because much heat from the energy-intensive process of glassmaking is lost through exhaust gases that could be used to preheat batch and cullet. Energy costs and emissions can be reduced through this technology. The E-Batch system developed by BOC Gases in 2001 is the most recent technology that has been developed. It is unique in that it has been designed to be integrated with oxy-fuel-fired furnaces, and it incorporates exhaust gas cleaning to a stringent regulatory level. The Nienburger Glas Batch Preheater has been one of the most successful preheating technologies explored. Furnace exhaust gases and a batch and cullet mixture are in direct contact inside a hopper, and furnace energy savings of up to 29 percent have been reported in five installations in Germany.

Non-conventional methods that combine melting and refining include the Rapid Melting and Refining (RAMAR) system developed by Owens Illinois, which has never been used in production but bears features worthy of consideration for future melters. Saint-Gobain has developed the FAR system, which combines flame fusion and electrical refining and the FARE system, which replaces the FAR flame melter with a single-stirred electric melter.

Environmental regulations to restrict emissions from fossil fuel furnaces have encouraged consideration of all-electric melters, which eliminate most air emissions concerns but are not economically feasible. Two innovations for emissions control are considered: Körting Gradual Air Lamination and the Sorg LoNox furnace.

The variety and extent of innovations in glass melting technology that have been researched and developed—or abandoned—over the last quarter of the 20th century depict the exhaustive search for revolutionizing the glass melting process to meet the long-range needs of glass manufacturers into the 21st century. The technologies reviewed here suggest the vast potential for a revolutionary glass melting system.

Chapter V Industry Perspective on Melting Technology

V.1. Industry assessment

If the glass industry is to survive in the US economy, manufacturers must address the economic and technology challenges that so clearly confront the glass industry: An innovative glass melting system as a total process could enable capital reduction, create value-added glass, and minimize energy and environmental impact in all units of glass processing.

To recommend steps toward advancing melting process technology under projected scenarios of glass melting technology in the US, a select group of experienced glass scientists and engineers was convened at a workshop by the Glass Manufacturing Industry Council on August 28, 2002, in Columbus, OH.

All four industry segments—flat, container, fiber and specialty glasses—and all regions of the country were represented by the 15 participants who among them had up to 500 years of experience in glass melting and processing. The experts were asked to identify glass melting technology for development by the year 2020 under the assumptions that:

- Energy cost would be three to five times the current cost;
- Environmental requirements would be much more stringent for 2.5 μ particulate emissions
- Pressure would increase on manufacturers to do more about global warming and carbon dioxide emissions;
- Cost of capital in US companies at one-half and at twice the current levels.

Technologies to be considered for projected scenarios of "much higher energy cost" and "significantly lower capital cost" generated the greatest response. Segmentation of melting and refining and intensifying and optimizing each segment was identified as an attractive alternative with escalated energy costs. Vacuum refining, higher-performance refractories, and new glass products were suggested for the lower-capital cost scenario. The consensus of experts was that substantial change in outlook and approach to development are essential if the glass industry is to succeed over the next 20 years.

V.2.1. Perspective on melting technology

The industry has been lulled into complacency by 25 years of relatively stable energy costs; and environmental restrictions have not been as stringent as they might have been. To ignore the two major issues of energy costs and availability and environmental restrictions any longer is to do so at considerable peril.

- **Environmental Issues**—more stringent regulations for environmental emissions from glass melting;
- **Energy Usage**—uncertainty of availability and cost of fossil fuels, which could cost three to five times more than currently;
- **Capital Investment**—availability of capital and changes in cost of manufacturing that could become two times plus one-half their current cost.

As challenges to industry intensify, alternative approaches to economic problems and innovative technical solutions are needed. The industry must replace its "trial and error" approach with more accurate prediction and expected results. Reductions of 300˚C have been proven in refining temperatures using vacuum refining as practiced by Asahi. Reductions of 150˚C in melting temperatures are expected with the use of submerged combustion melting.

Key areas of concern to glass industry experts are cost and availability of fossil fuel; increasingly stringent environmental regulations; high capital investment; high labor costs; and competition from other materials. The industry must focus on technology that will reduce high costs of manufacturing and avoid high capital investment required by today's technical processes. It must continue current initiatives to develop new high tech products at a faster rate. In the near future, companies within the glass industry will be required to work together more closely and cooperatively if they are to survive as a vital business segment. Competition is not with each other but with other materials and processes marketed by competing industries.

At the outset, the overriding problem of fractionalization of the glass industry must be addressed. Industry-wide cooperation among the segments of flat glass, container glass, fiberglass, and specialty glass is essential if effective glass technologies are to be developed and applied to the benefit of the industry as a whole.

V.2.2. Technical areas to consider

Four major areas in which the industry might proceed to advance melting technology with low capital costs, high energy efficiency, and operational flexibility that will respond to market demands were recommended.

1. *Fuels (synthetic fuels, new oxygen generation technologies)*

• Flex-fuel burner systems.

Investigate economical systems such as high-efficiency coal-powered combined head and power energy systems (e.g. turbines). Examine impacts of a hydrogen-fuel melter.

• Reduce environmental impact on the total melting system.

• Use waste heat to drive oxygen transport membrane–a thermal driven air separation process funded by DOE and other support groups.

2. *Standardize aspects of processing (compositions by segment, toll melting of glass).*

• Maintain long-term competitive advantage by developing alliances between raw materials and energy suppliers and glass manufacturers.

• Form a consortium of at least five strong companies to develop a revolutionary new glass melter. Work in conjunction with national laboratories and with DOE and other government funding agencies. Industrial partnerships should be encouraged to conduct precompetitive R&D to advance technology.

• Maintain the energy and interest generated by the GMIC within the glass industry that recognizes that common problems are best solved in common. Focus on solving major

problems that confront the entire industry rather than diluting efforts by solving problems for individual companies or market segments.

• Educate plant engineers and operators
Widespread knowledge about glass technology is prevalent within the industry among plant engineers and operators. GMIC might update the "Handbook for Self Study" by Fay Tooley for distribution within the industry. Glass technology manufacturing workshops could be sponsored in conjunction with conferences and workshops.

3. *Process design (segmented melting, vacuum refining, waste heat utilization).*
• Melter size.
Consider small versus large melters. While large melters are more energy efficient, small melters provide greater flexibility and faster changeovers. Smaller melters are easier to service and reconfigure. They provide higher profit margins by quickly adjusting to market demands for a variety of products.

• Automation and control systems.
Technologies with increased automation and process control should be designed to save energy, reduce pollutant emissions, enhance product quality and increase productivity. They could be based on process and equipment that can feed forward from melter to production equipment and back to batch house. To drive the melting process and produce consistent quality products, intelligent control systems should be a feature of all glass melters. Apply intelligent control systems to drive the melting process and insure product consistency. Revisit on-the-shelf projects and technology that was technically successful but economically challenged.

• Accelerated melting.
For highly driven melting processes, high shear is easily induced in glass melts and shear attenuating silica cords by a factor of several thousand has been far more effective than an extra 100˚F in melting temperature. Likewise, ordinary glass melting uses gravity (1G) to cause bubbles to rise out of the melt. Centrifuges easily generate hundreds of Gs. (This technique was used in experiments at Owens Illinois to melt and refine soda-lime glass at 1950˚F.)

4. *Technology base development (instrumental and controls, "central" industry lab, industry and government relationship).*

The technology should be advanced to meet the challenge of the three E's—energy consumption, environmental regulation compliance and economic viability.
• Value-added methods
Industry should work together on innovations that create value-added products in two directions.

a.) Develop new products within the glass industry by changes within the total melting system: higher glass quality; higher durability and strength made from higher temperature melting systems; changes within the conditioning and refining atmosphere or immediately downstream of final glass delivery to fabrication.

b.) Develop new products by coupling work with continued research into how surface coatings and other surface modifications can change or enhance the product: create synergy toward new value-added glass that ensures adequate capital regeneration.

• High-intensity melter
All individual glass processes should be explored starting with creation of a high-intensity melting. In a higher temperature system, minerals can be substituted that contain the oxides of B_2O_3, Li_2O, K_2O, Na_2O rather than the more toxic and higher cost chemicals. Higher temperature melting systems that do not need B_2O_3 or alkali oxides Na_2O, K_2O, and Li_2O in their formulations would be a quick way to reduce emissions. Not all problems can be solved by substituting batch chemical constituents, but technologies that avoid emission of dioxins from combustion would be desirable.

Refractory materials that allow higher melting temperatures without excessive corrosion or blistering should be developed.

• Forced convection melting systems
More robust melters are required to control convection patterns by using a stirred chemical reactor to control stirring forces that overwhelm convection created by thermal and compositional gradients and by gas release. Natural convection in present glass melters is very "fragile" and strongly affected by minor changes in inputs that cause major changes in product quality. These bubbler, mechanical melter design systems allow faster glass composition changes and lower residence time [Owens-Illinois RAMAR features mechanically stirred melter and centrifugal finer system and contains some essential features for future melters.]

• Preheating batch
By preheating batch, the batch layer can be thinned and extended, and dispersed into the glass. Convection is increased and heat transfer is higher. These goals can be accomplished by extending the heating portion of the furnace; mixing batch with glass by submerged feeding and stirring, submerged combustion, mechanical stirring; reducing bubble layer under the batch blanket; and recovering waste heat. The problem to overcome in batch heating is to remove the bubble layer so as to increase the radiation heat transfer to the melt.

• Oxy-fuel conversions
Oxy-fuel technology is thermally efficient and cost effective when the total system is considered and up to three repair cycles that include the increased savings in regenerator repairs and avoid recycling of toxic materials. Additional thermal energy is applied above the batch charge or within the molten glass to drive basic mechanisms in a continuous glass furnace. Oxy-firing is the best way to enable glass producers to meet restrictive NOx emission legislation. Being relatively low-risk, it is nearly identical to traditional glass-unit melters. Oxy-fuel furnaces allow precise thermal input for controlling the melting process. Rebuild requires less refractory, and the furnace can be returned to operation in a shorter time. Oxy-fuel furnaces are less expensive to construct than conventional furnaces due to elimination of refractory and steel required for regenerator

and port structures. Fuel savings of 15 to 40 percent are commonly experienced with conversions, although this does not offset an additional cost for oxygen, an incentive for development of waste heat recovery systems.

• Segmented melting
Separate the stages of the glass fusion process into distinct processes. Fluorine, boron and lead containing batches could be converted from oxides to glass in all batch/all electric pre-melter segmented melters prior to seeing fossil fuels. Industry should intensify this new, lower-cost technology for batch preheating, primary melter, secondary dissolution, forming, and vacuum refining, and thus optimize each stage of the glass formation process. Backflow from one section to a previous section would be limited because segmentation will broaden the residence time distribution and affect energy efficiency. Maximum residence time is limited, and glassmakers should aim for low residence time in the melting and refining processes.

Look at all aspects of the melting process as individual units to be optimized, such as sand dissolution, homogenization, refining, and conditioning, as well as optimum quality achieve in the final fabricated product. Look at these different systems to allow new products, value, and quality to be created to ensure capital replacement and minimize total energy use, with a focus on reducing environmental impact of the total melting system.

Consider separating the melting process into high-speed, low-residence time melting and refining processes. This implies lower capital investment/ton melted, lower pollution/ton melted, lower energy consumption/ton melted, more flexibility, and better quality.

Separate basic glass manufacturing processes into discrete processes (batch preheating, first stage raw material melt down, second stage melting and foam reduction, refining, and conditioning) so that each can be intensified with new, lower-cost technology. The processes should be designed and connected in a manner to produce only the necessary and sufficient conditions required to achieve the quality requirements of each specific end product.

All aspects of the melting process should be regarded as individual units to be optimized, including sand dissolution, homogenization, refining and conditioning, and optimum quality in the final fabricated product. These different systems can be seen as ways to create new products, value and quality to ensure the ability to replace capital and to minimize total energy use, with a focus on reducing the environmental impact of the total melting system.

• Review innovations
Technologies developed in the 1990s during an economic boom may be transferable to current glassmaking with minimal effort. Numerous entrepreneurs worked in a variety of areas such as hazardous material vitrification, post-consumer glass recycling, radioactive material disposal, and soil remediation. Concepts from previous innovations that have been developed but abandoned due to scale-up could provide valuable information to

developing an innovative glass melting system. With development of new materials, controls, and glass compositions, many technologies may be attractive to a NGMS and meet economic constraints.

The glass industry should remember that new products within the glass industry have often relied on changes within the total melting system. These could be moves to achieve higher glass quality; produce new products of higher durability/strength made from higher melting temperature systems; create new products by changes within the conditioning and refining atmosphere or immediately downstream of final glass delivery to fabrication. Couple this work with continued research into how surface coatings and other surface modifications can change/enhance product. This is the best way to create synergy toward new value-added glass products that ensure adequate capital regeneration.

• Environmental regulation compliance
To avoid emissions, explore control of limits for heavy metals, corrosive halides, and dioxins/furans by substituting chemical constituents that may ameliorate problems. Seek new technologies that can avoid emissions of dioxins from combustion rather than using the band-aid approach to current melters by adding expensive air pollution control equipment.

Fewer solutions are available for reducing fine particle emissions and lowering carbon dioxide levels as government environmental regulations become more stringent, particularly for heavy metals, corrosive halides, and dioxins. Alternative melting with electricity avoids some environmental emissions problems, but solutions might be sought to overcome the shortcomings of insufficient refining and refractory corrosion. Interest has intensified in vacuum refining, higher performance refractories, and new glass products as a way to lower capital costs. Methods to improve operational flexibility, thereby supplying product quickly to market, are also needed. Under current economic conditions, glass manufacturers avoid the risks associated with trying technology that has not been proven.

V.3.1. Economic assessment

Any new melter technology developed should be energy and capital efficient. Industry should focus on reducing total costs for melting and refining raw glass for forming and processing. When envisioning a new approach to glassmaking, economic factors dominate technical considerations. Costs of glass manufacturing must be reduced, preferably through research and development of new melting technologies that address the consumption of fossil fuel and cost of energy; reduction of emissions and robotic and advanced automation that reduce labor costs, require lower capital investment, and improve technical and aesthetic product quality. Yet any cost effective, environmentally compliant technology developed must not create greater complexity in processing methods or require greater expense of operation.

Business and technical industry leaders must develop a common view of the forces that will drive the industry in the future and increase cooperation if the industry is to survive.

Glass manufacturers of all products can identify critical common areas that could increase profit margins and market share to combat competition with alternative materials.

Future growth of the glass industry might take place in designated attractive industrial parks where a mix of high energy consuming industries can combine to produce their own energy, operate on or near the high mass raw materials source or near deep water ports for ease of heavy shipping, or share low cost rail and water or pipe line transportation systems.

Cooperative approaches for industries that seek a place within the US industrial economy will require a concerted effort and an adjustment of the corporate attitude toward research and development. In its current financial and technology state, individual glass manufacturers cannot support the movement to correct the problems it faces; federal funding is essential if the glass industry is to remain a vital part of the United States economy.

Consensus for steps that can be taken to improve the economic strategy is widespread:
• Energy cost control.
Industry should take the lead in energy price stability and environmental compliance. Expected rise in natural gas prices will increase the squeeze on the industry and impact production.

• Collaborate within industry.
The insular business model should be changed so that companies work together for the common good. To move glass-melting technology forward, a coherent and concerted effort must be made.

Potential areas for industry-wide collaboration are:

Research and technology development;
Environmental issues—understand sources;
Identification and sharing of best practices;
Department of Energy and Environmental Protection Agency cooperation;
Incentives for adopting best practice;
Greater reliability for scale-up technologies;
Glass industry research self funded by participants through a percentage of sales dollars (US brick industry is doing this successfully.).

• Research and Development
Advancement of glass melting technologies has been hampered by the limitation of research and development in glass melting due to small profit margins and low growth rates that must be shared with corporate interests. Most R&D interests have had short-term goals and been narrowly focused, particularly on projects that would lead to new products with high profit margins. Industry-wide leadership could foster melting R&D. For innovative ideas, researchers might explore some extreme technology developments of the 1990s that have been developed for such glass-melting applications as nuclear and

hazardous waste containment, recycling and soil remediation, or revisit innovative technologies detailed in Chapter IV "Innovations in Glass Technology."

V.4. Economic strategy

From an economic perspective, the need for advanced glass melting technology becomes clear in the following ways.

• Change the style of relative non-cooperation among companies and segments. Work together on the current major problem, which is an inability to generate margins high enough to replace its own capital assets. Industry segmentation, competition, and intellectual property right disputes are obstacles that must be overcome.

• Develop a pre-competitive advanced melting concept within the industry. This will provide opportunity to syndicate risk and cost at an early stage on more revolutionary projects. Development of a radically new glass melting system that is commercially viable could cost well in excess of $100 million. With current low returns for producing most types of glass, few, if any, companies are willing to spend this much money alone. Should one large company be willing to invest in development of a viable system, other members of the industry could buy the technology at a reasonable price.

• Develop industry-wide strategy.

Industry experts recommended a three-phase approach:

Phase I

Conduct a proof-of-concept to investigate the validity, feasibility and economic return of selected projects. Government funding could be justified by citing environmental constraints, energy efficiency, job availability, national security, and glass industry competitiveness. The current state of the glass industry will not support financial commitment to needed technology development.

Phase II

Build a demonstration facility with cooperative funding.

Phase III

Provide proven technologies to major glass companies to incorporate them into their capital plan (license).

Collaboration between suppliers and glass manufacturers would broaden the scope of possibilities. If the entire glass industry and its supply industry were to come together in a coherent and concerted effort to craft and execute a meaningful and practical strategy, the results could be powerful.

V.5. Conclusion

"The glass melting process is ripe for drastic change."

Ray Richards, Affiliated Technical Consultants

Based on recommendations from the industry experts who participated in the workshop on glass melting and processing and guided by the goals for 2020 in the "Glass Industry Road Map," economic and technical considerations and recommendations are compiled

here. To remain vigorous and competitive, the industry should conduct new research and technology development in these recommended areas:

l. Advanced melters and delivery system concepts to improve energy efficiency of natural gas-fired combustion;]

2. More rugged, accurate, and affordable sensors for process control;

3. Combustion controls for increasing energy efficiency and reducing environmental emissions;

4. User-friendly mathematical computer models/programs to stimulate glass manufacturing processes from batch to forming and make it accessible to the glass industry at modest cost.

Any solutions to economic problems of energy savings, environmental regulations, or capital investment must be cost effective and practical for glass manufacturers. All segments of the glass industry must collaborate to meet the present challenges if the industry is to succeed.

In the long term, the most promising directions to explore as summarized from the workshop participants are:

• Forced convection melters (via bubblers and/or mechanical stirrers);
• Melter designs for faster glass composition changes (lower residence time, less forward mixing);
• Sub-atmospheric pressure fining to eliminate chemical fining agents (other than water);
• Refractories to allow higher melting temperatures without excessive corrosion or blistering;
• Thermodynamic modeling of melting for which many measurements of thermodynamic properties of glassmaking materials need to be made and analyzed.

Workshop Participants

The perspective on the state of glass melting technology in the US was compiled from information provided during a workshop convened by the GMIC by the following recognized authorities on glass melting: Christopher Q. Jian, Owens Corning; Mike Nelson, Corhart Refractories, retired; M. John Plodinec, Diagnostic Instrumentation and Analysis Laboratory (DIAL); Ray Richards, Associated Technical Consultants; Dean Sanner, Techneglas, retired; Walt Scott, PPG Industries; Ray Viskanta, Purdue University, retired; Dan Wishnick, Eclipse Inc.; Warren Wolf, Owens Corning, retired; Frank E. Woolley, consultant, US-DOE.

CHRISTOPHER Q. JIAN is a senior engineer at Owens Corning. His responsibilities include mathematical and physical modeling of furnaces, glass delivery systems, and bushing design; innovative process development; manufacturing support; and providing technical support to non-glass-related manufacturing processes. Prior to joining Owens Corning in 1995, he was manager of R&D at Vortec Corp from 1991 to 1995, working primarily with solid waste and low-level radioactive waste vitrification. He holds a BS degree from Zhejiang University, China, MS degree from Nanjing Institute of Technology, China, and a PhD degree from the University of Maryland at College Park. He did post-doctoral work at Purdue University. He holds two patents with two patents pending and has received six Owens Corning invention records.

MIKE NELSON holds a BS degree in ceramic engineering from Iowa State University. He was employed by PPG Industries from 1965 through 1966 before moving to Corhart Refractories where he served for over 35 years in plant process engineering, R&D, technical services, product management, and sales and marketing. He retired July 31, 2002, as manager of applications engineering and is now a consultant for refractory materials, designs, and applications.

M.J. PLODINEC is director of the Diagnostic Instrumentation and Analysis Laboratory (DIAL) at Mississippi State University, Mississippi's energy laboratory. This multi-disciplinary organization brings to bear a unique combination of sophisticated instrumentation and experienced personnel on its customers' problems. Under Plodinec's guidance, DIAL has become a leader in characterizing operating glass furnaces. He is a fellow of the American Ceramic Society and an internationally recognized expert in nuclear waste vitrification. During his 22-year involvement with the Defense Waste Processing Facility (DWPF) program — the United States' first and the free world's largest radioactive waste vitrification facility — he impacted every aspect of the DWPF process, from characterization of the waste to proof testing of the canister closure to ensure leak tightness. He ran the first three pilot melters at the Savannah River Site and was responsible for operation of melters using radioactive waste at Savannah River for 20 years. He is a member of the American Chemical Society and is the State of Mississippi's representative on the University Advisory Board to the Energy Council. He is technical lead for the state of Mississippi's Alternative Energy Enterprise.

RAY RICHARDS holds a BS in chemistry and mechanical engineering and MS degree in metallurgy. He has 53 years of industrial R&D experience, including more than 40 years in the glass and vitrification industries. His glass experience includes 10 years of mold, electrode, and platinum metallurgy; 10 years of math, fluid modeling, and extensive field measurements of conventional melting furnaces; and over 10 years in developing rapid melting and refining systems and batch preheating. His interests remain in advanced glass melting systems, and he is affiliated with Associated Technical Consultants.

DEAN SANNER holds a BS degree in ceramic engineering from the University of Illinois and MBA from the University of Toledo. At Owens Illinois he has worked as glass technologist; environmental engineer; financial analyst, corporate planning; business planning manager, international division; administrative manager (Nippon Glass, Japan); manager, mergers and acquisitions. At Techneglas, he was chief financial officer.

WALT SCOTT graduated from Alfred University with a BS degree in ceramic engineering in 1963 and began employment with the Pittsburgh Plate Glass Company in Cumberland, Maryland. At PPG he held positions of increased responsibility in flat glass manufacturing, specializing in hot-end technology and operations. From 1982 to 1989 he was manager of technology for the PPG P-10 process when he managed a group of manufacturing engineers and coordinated the PPG technical community for the process scale-up to manufacturing. He became plant manager of the new Perry, Georgia, plant in 1989. He returned to Pittsburgh as manager of technology, trade, and automotive products, which covered the technical needs for all PPG float glass operations, a position from which he retired April 1, 2002.

RAY VISKANTA is the W.F.M. Goss Distinguished Professor of Engineering, emeritus, at Purdue University. He obtained his BSME, MSME, and PhD degrees from the University of Illinois at Urbana-Champaign and Purdue University. For the past 40 years, he has conducted theoretical research in heat transfer and radiation transfer as well as fundamental and applied problems related to glass melting, processing, and forming. Under the sponsorship of several US glass manufacturers he and his students were the first to develop three-dimensional glass melting furnace simulation models, including air bubbling, electric boosting, batch melting, and seed transport. He directed research of over 63 PhD and 45 MS students and over 40 post-doctoral researchers. His numerous professional recognitions include an honorary doctor of engineering degree and membership in the National Academy of Engineering (1987).

DAN WISHNICK holds a BS in ceramic engineering from Rutgers University and has more than 20 years of experience in the glass industry, including engineering and manufacturing positions with Owens-Illinois, Guardian Industries, and Ford Motor Co., Glass Division. Currently with Eclipse Inc., he is in charge of the Combustion Tec brand and is responsible for global glass activities. He is associate member representative on the board of directors for the Glass Manufacturing Industry Council.

WARREN WOLF is currently a glass industry consultant in technology and business issues as Warren W. Wolf Jr. Services. He retired in 2001 after 33 years with Owens Corning as vice president of science and technology and chief scientist for glass and other material issues, in both process and product aspects. He received his PhD from Ohio State University, his BS from Pennsylvania State University, and his MBA from Xavier University. He has 15 patents. He is president-elect of the American Ceramic Society and a member of the National Institute of Ceramic Engineering, and the International Commission on Glass. He serves on the advisory boards for the materials science and engineering departments at Ohio State University and Virginia Tech.

FRANK E. WOOLLEY is a technical consultant specializing in glass melting. He is retired from Corning Incorporated where he was manager of melting research in the Science and Technology Division. His group investigated the fundamental processes of glass melting and developed new industrial melting processes for Corning's domestic and international glass melting. He received BS and MS degrees in chemical and metallurgical engineering from the University of Michigan, and an ScD in chemical metallurgy from MIT (1966). He earned a MBA degree from Syracuse University (1980). He worked at Corning from 1966 to 1998, except for service as a powder metallurgist with the US Army from 1967 to 1969. He managed various groups in RD&E at Corning, NY, and Fountainbleau, France, where he was involved with testing and selection of refractories and raw materials, laboratory- and pilot-scale glass melting and forming, development of glass compositions, ceramic processing, and vapor deposition of glasses for optical fibers. He has taught glass technology at Alfred University and at the Center for Professional Advancement. He is a fellow of the American Ceramic Society (1997); past chair of Technical Committee 14 on Gases in Glass of the International Commission on Glass. He is a past member of ASTM Committee C-8 on Refractories, the Society of Glass Technology, and the American Institute of Chemical Engineers. He currently consults for the U.S. Department of Energy and its contractors on vitrification of radioactive wastes.

Chapter VI Vision for Glassmaking

VI.1. Future of Glassmaking

Given that the industry rate of growth has slowed, that fewer new glass plants have been built, and that competition from global imports and other materials has intensified, a vision that combines the economics with the technology is mandatory. For consideration of new melting technologies, this study has defined the major priorities as quality of the glass product; economic feasibility; and process compatibility.

Step-change efforts to improve melting technologies have been unsuccessful, or only partially successful, to fully meet their design criteria. For example, oxy-fuel conversions have been moderately successful, but still struggle with issues of refractory applications, control strategies, and higher operating costs due to scrimping on technology funding. Goals for the future of glass have already been established in the "Glass Industry Roadmap," which was developed under the auspices of the US Department of Energy—Office of Industrial Technologies. For the year 2020, the set goals for economic and technical advancements are aggressive and challenging. See Table VI.1.

Table VI.1. Objectives and Goals for 2020

Objective	**Goals for 2020**
Production costs	20% below 1995 levels
Recycle all glass products in the manufacturing process	Increase to 100%
Reduce process energy use	50% toward theoretical energy requirements
Reduce air/water emissions	20% below 1995 levels
Recover, recycle, and minimize available post-consumer glass products	Increase to 100% where use exceeds 5lb. per capita
Glass product quality	Achieve Six Sigma quality
Broaden glass products in marketplace	Create innovative glass products
Increase supplier/customer partnership	In areas of raw materials, equipment, and energy improvements

When envisioning a new approach to glassmaking, economic factors dominate technical considerations. Capital costs of glass manufacturing must be reduced, preferably through research and development of new melting technologies that substantially reduce required investments; address the consumption of fossil fuel and cost of energy, both fossil and electric; reduction of emissions; robotic and advanced automation that reduce labor costs; and improve technical and aesthetic product quality. Yet any cost effective, environmentally compliant technology developed must not create greater complexity in processing methods or require greater expense of operation.

Business and technical industry leaders must develop a common view of the forces that will drive the industry in the future and have a more visionary approach if the industry is to survive. Glass manufacturers of all products can identify critical common areas that could increase profit margins and market share to combat competition with alternative

materials. Perhaps partnering or other forms of technical collaboration might offer an alternative approach to solve common problems.

Future growth of the glass industry might be enhanced in designated attractive industrial parks where a mix of high energy consuming industries can combine to produce their own energy, operate on or near the high mass raw materials source or near deep water ports for ease of heavy shipping, or share low cost rail and water or pipe line transportation systems.

VI.2. Technology perspective

Advancement of glass melting technologies has been hampered by the limitation of research and development in glass melting due to small profit margins and low growth rates that must be shared with other corporate interests. Most R&D interests have had short-term goals and been narrowly focused, particularly on projects that would lead to new products with high profit margins. New industry-wide leadership is now fostering modern melting R&D.

Glass melting technology areas identified for long-range study of melting technology include: enhancement of batch and cullet preheating; acceleration of shear dissolution in the fusion process; and reduction of refining time.

Fewer solutions are available for reducing fine particle emissions and for lowering carbon dioxide levels as government environmental regulations become more stringent, particularly for heavy metals, corrosive halides, and dioxins. Alternative melting with electricity avoids some environmental emissions problems, but solutions might be sought to overcome the shortcomings of insufficient refining and refractory corrosion. Interest has intensified in vacuum refining, higher performance refractories, and new glass products as a way to lower capital costs. Methods to improve operational flexibility thereby supplying product quickly to market, are also needed. Under current economic conditions, glass manufacturers avoid the risks associated with trying technology that has not been proven or successfully demonstrated.

Potential areas of exploration for immediate consideration include recycling, fining agents, refractory life, furnace life, and new raw material development. Melting technology R&D areas were defined in this study for the immediate future.

- Computer models to integrate all physical and chemical processes in the glass melter. These models should be accurate enough to design melters from first principles and fast enough for use in model-reference process control. Because of the long time lags inherent in melting processes, models running in real time will be an essential part of future process controllers.
- Physical and chemical properties calculated from the melt composition that will be valid over broad composition ranges. This can be achieved by integrating extensive experimental results with sound models of melt structure and bonding.
- Significantly higher operating temperatures achieved by removing the present barriers, such as refractory failure and metals failure by creep, corrosion and blistering.

VI.3. Economic perspective

The major drawback to collaboration is fractionalization of the industry into four major segments. Each segment thinks only of what is relevant for its operation and is reluctant to become involved in industry-wide coalitions that would be more competitive and efficient. A number of organizations facilitate glass industry technical collaborations to meet common challenges: Glass Manufacturing Industry Council; US Office of Industrial Technologies—Department of Energy; the annual Glass Problems Conference; the Society of Glass Technology (Great Britain); the Industry-University Center for Glass Research; Industrial Technology Institute (Cleveland State University); and the International Commission on Glass.

A new business model has been conceptualized for a starting point from which the glass industry could benefit nationwide. Under the auspices of a neutral party, the glass industry could cooperatively develop a comprehensive business model to evaluate the economic viability of emerging technologies and assess their attractiveness for capital investments. A new hypothetical glass enterprise, "Glass Inc.," would own and manage furnaces for glass production and contract for delivery of molten glass in quantities needed for downstream glass fabrication. Through economies of scale, raw materials, energy and refractory materials could be purchased cooperatively, thus reducing costs throughout the industry. Engineering for rebuilds could be collectively obtained on terms more favorable than individual companies can obtain the same services. Glass melters could be standardized across the entire industry, varying only with glass composition and quality requirements.

Glass Inc. would have an incentive to manage capital expenditures and furnace rebuilds more efficiently across a broader production base and could develop new technologies to improve glass melting. The industry cooperative would operate on a similar model to the way oxygen suppliers generate oxygen on plant sites and contract for delivery of the quantity of oxygen needed by the glass producer at a price that incorporates the capital costs of set-up.

In an ideal business model, furnaces would be rebuilt as a commodity across the various segments of the industry to produce glasses in mass quantities for particular applications. Glass melting would be separated from the downstream product forming and fabrication. Industry-wide priorities would be set for evaluation and adopting of new technologies based on quality, economics, and the compatibility of the glass melting process required for the type of glasses produced.

To establish the Glass Inc. model, some basic challenges would have to be overcome. The US glass industry has no real history of collaboration. A number of operational issues, such as agreement on appropriate metrics for the quality of glass delivered and issues of accountability and liability, would need to be resolved. Yet to collaborate and thereby syndicate risks and costs associated with research and development is the best hope for the US glass industry to achieve the step-change process innovation it needs. Glass Inc. is clearly worth further consideration as indicated by the interest in the concept

expressed during interviews, discussions and workshops conducted over the course of this study.

New melting glass processes must also be explored. Development of an advanced glass melting process could be economically feasible as evaluated by improvements in glass quality, higher yields in downstream forming operations, reduced energy consumption, lower capital costs, enhanced flexibility, and adherence to environmental regulations. The total automation of glass melting systems with adaptations to the continued evolution of existing technology could also enhance the economic picture of glassmaking.

The submerged combustion melter effort has been encouraging because the consortium, brought together by their membership in the GMIC, consists of major glass companies: CertainTeed Corp.; Corning Incorporated; Johns Manville, Berkshire Hathaway Co.; PPG Industries Inc.; Owens-Corning Corporation; and Schott North America Inc. These companies account for a major share of glass sold in the US and are major employers within the industry. This is the first such effort concentrated on an industry "Grand Challenge." This is a technology area where every glass company is involved but each company uses the same process pioneered 60 years ago with relatively minor variations. Many individual efforts have been mounted to improve this technology but due to the complexity of the process and economics, not many innovations have been successful. This recent effort has the potential to radically alter the economics of glass melting by substantially reducing cost of operation. This combination of government funding and an industry consortium, with the Gas Technology Institute (GTI) and suppliers sets a good precedent.

VI.4. Conclusion

For the future of glass manufacturing in the United States, the need to develop new energy-efficient, capital efficient and environmentally compliant glass melting processes is crucial. This is a huge undertaking that will not be accomplished overnight. By confronting the challenges and establishing a strategy, the glass industry can move toward this goal. Without changes in the approach and drivers within the glass industry, the US glass industry could follow the US steel industry into decline within the twenty-first century. By its inherent nature as a conservative, risk-averting industry, glass manufacturers have already waited too long to solve the major problems that they face. Increased funding from government sources will be essential for resolving the challenges that confront the glass industry today.

The US glass industry could benefit from a new business model that would involve collaboration across all four segments of glass manufacturing. The new business model envisioned as Glass Inc. would involve a neutral party to play a comprehensive role in evaluating technologies and assessing them for capital investment. Common problems could be identified and technology could be developed to solve these problems for the benefit of the whole industry.

Technology could be standardized for all segments of the industry that would benefit from economies of scale in purchase of raw materials, energy sources, capital equipment,

and facility construction and plant rebuilds. The identification of critical areas of concern to all segments poses the most challenges to profit margins and market share will make glass products competitive.

To advance glass technology, research and development needs to be accelerated to overcome the challenges that face glass manufacturers. Particularly in the areas of enhancing batch and cullet preheating, accelerating shear dissolution in the fusion process, and reducing fining time, the total glass melting system requires new technology. The most promising recent technical developments are application of a shallow fining shelf, internal batch preheating, and conversion of the furnace for oxygen firing. The feasibility of tank segmentation and use of hybrid heating systems and sub-atmospheric pressure fining should be studied further or demonstrated within the industry.

A team to develop a Next Generation Melting System has moved forward, under the auspices of the Glass Manufacturing Industry Council, to develop an oxy-gas fired submerged combustion melting system (SCM). This segmented approach separates and optimizes stages for high intensity melting and rapid refining, reducing total residence time by 80 percent or more. The committee has determined that SCM is the only approach so far that will meet and exceed performance characteristics of refractory tanks and also provides large capital and energy savings to the glass industry.

Along with new, efficient and environmentally friendly melting and refining technologies, the glass industry must fully implement available and developing control and automation technologies to obtain optimized results. The continuing existence of the glass industry in the United States is a tribute to the inherent worth of the material stability of the glassmaking process. The major drawback to the glass industry today is the fragmentation that prevents manufacturers from cooperating even though the need for advanced technology in melting is a problem common to all segments. By combining the collective wisdom of glass scientists, engineers, managers and operators with government funding and the support of private glass enterprises, the nation's glass industry can not only survive but also thrive as it advances into the 21st century. The future of the glass industry in the United States hinges upon process and product advancements to reduce the basic costs for manufacturing glass and improve the economic returns to the manufacturing companies. The economic challenges faced by the glass industry are daunting but new technology is being identified to radically reduce costs to enhance profitability so new investments can be justified. The new spirit of collaboration within the industry bodes well for technical advancement and economic prosperity.

Section Two

Applied Glass Technology

Introduction

In the course of generating this report the team of Principal Investigators, reviewers and editors developed additional materials that were not a part of the original concept, but that were felt to add substantial value to the overall document. Section II contains these sections:

• A Primer on Glassmaking

Author Phil Ross, bringing extensive experience with and knowledge of the glassmaking process to the table, developed this very valuable chapter on the technology of melting glass. This "primer" will serve as an overview to any student of glass interested in a more complete understanding of the physics and chemistry of glass melting. As such, it is an invaluable tool that is offered to the glass industry of today and the future.

• Automation and Instrumentation for Glass Manufacturing

This Chapter evolved from discussions regarding the direction our industry is taking: towards higher technology approaches and greater fuel and resource efficiency. It was felt that an important part of this evolution must be the development of integral and comprehensive systems to permit control and management of a sensitive and complex process with less and less human intervention (which can be a source of inconsistencies or error). Automation and instrumentation is developing in this country, but has not received major attention across the industry. We called on a team of experts in the field to offer some ideas and suggestions with regards to the opportunities that exist or are being developed to remove more and more uncertainties from the process and to move towards lowering costs and increasing "fill rates" to approach statistical optimums.

• Developments in Glass Melting Technology

While the TEA report was being produced, time passed and the increasing communication and collaboration that came with the activation of the GMIC, combined with the DOE's recent emphasis on "Grand Challenges", led to the initiation of several research projects that, if successful, promise to lead to major change and progress in the industry. The three projects that have evolved from this change are included in this document to illustrate the direction the industry is taking. The fourth section is an excellent theoretical paper on the concept of segmenting the melting system written by Dr. Ruud Beerkens, a renowned glass industry professional based at the TNO in the Netherlands.

Chapter 1
Primer for Glassmaking
Compiled from technical glass literature
By C. Philip Ross

1.1. Glass Oxide Compositions by Segment/Product
The most widely used classification of glass type is by chemical composition, which gives rise to four main groupings: soda-lime glass, lead crystal and crystal glass, borosilicate glass, and special glasses. The first three of these categories account for over 95 percent of all glass produced. The thousands of special glass formulations produced mainly in small amounts account for the remaining 5 percent. With very few exceptions, most glasses are silicate-based, with their main component as silicon dioxide (SiO_2). Glass technologists characterize glass chemistry based upon each ceramic oxide component's weight percentage.

Soda-lime glasses
The vast majority of industrially produced glasses have very similar compositions and are collectively called soda-lime glasses. A typical soda-lime glass is composed of 71–75% silicon dioxide (SiO_2 derived mainly from sand), 12–16% sodium oxide (soda; Na_2O from soda ash [Na_2CO_3]), 10–15% calcium oxide (lime; CaO from limestone [$CaCO_3$]), and low levels of other components designed to impart specific properties to the glass. In some compositions a portion of the calcium oxide or sodium oxide is replaced with magnesium oxide (MgO) or potassium oxide (K_2O), respectively. Soda-lime glass is used for bottles, jars, everyday tableware and window glass. The widespread use of soda-lime glass is due to its chemical and physical properties.

One of the most important of these properties is the light transmission of soda-lime glass, hence its use in flat glass and transparent articles. Its smooth, nonporous surface is largely chemically inert, and so is easily cleaned and does not affect the taste of its contents. The tensile and thermal performances of the glass are sufficient for these applications, and the raw materials are comparatively cheap and economical to melt. The higher the alkali content of the glass, the higher the thermal expansion coefficient and the lower the resistance to thermal shock and chemical attack. Soda-lime glasses are not generally suited to applications that involve temperature extremes or rapid temperature changes.

Lead crystal and crystal glasses
Lead oxide can be used to replace much of the calcium oxide in the batch to make a glass known popularly as lead crystal. A typical composition is 54–65% SiO_2, 25–30% PbO (lead oxide), 13–15% Na_2O or K_2O, plus other various minor components. This type of formulation, with lead oxide content over 24%, results in glass with a high density and refractive index, thus excellent brilliance and sonority as well as excellent workability, allowing for a wide variety of shapes and decorations. Typical products are high-quality drinking glasses, decanters, bowls and decorative items. Lead oxide can be partially or

totally replaced by barium, zinc or potassium oxides in glasses known as crystal glass, but this can result in changing some aspects of traditional crystal furnaces.

Borosilicate glasses

Borosilicate glasses contain boron trioxide (B_2O_3) and a higher percentage of silicon dioxide. A typical composition is 70–80% SiO_2, 7–15% B_2O_3, 4–8% Na_2O or K_2O, and 2–7% Al_2O_3 (aluminum oxide). Glasses with this composition show a high resistance to chemical corrosion and temperature change (low thermal expansion coefficient). Applications include chemical process components, laboratory equipment, pharmaceutical containers, lighting, cookware, and oven doors and hobs. Many of the borosilicate formulations are for low-volume technical applications and are considered to fall into the special glass category. A further application of borosilicate glass is the production of glass fiber, both continuous filaments and glass wool insulation. In addition to the chemical resistance and low thermal expansion coefficient, boron trioxide is important in fiberization of the glass melt. Typical compositions for glass fiber differ from the composition above. For example, the composition of E-glass is 53–60% SiO_2, 20–24% earth alkali oxides, 5–10% B_2O_3, 12–16% Al_2O_3, plus other minor components. It should also be noted that for continuous filament glass fiber, new low-boron or boron-free formulations are becoming more important.

Specialty glasses

This is an extremely diverse grouping that covers specialized low-volume, high-value products, the compositions of which vary widely depending on the required properties of the products. Some of the applications include specialty borosilicate products, optical glass, CRTs and flat panel display glass, glass for electro-technology and electronics, fused silica items, and glass ceramics.

Raw materials and batch formulation

Most glass articles are manufactured by a process in which raw materials are converted at high temperatures to a homogeneous melt that is then formed into commercial products (Fig. A2.1). A stable and uniform raw material is the key to the manufacture of high-quality glass. Raw materials are selected according to purity, supply, pollution potential, ease of melting, and cost. Sand is the most common ingredient. Container glass manufacturers generally use sand between 40 and 140 mesh for the best compromise between the high cost of producing fine sand and melting efficiency. Fiberglass manufacturers, however, use a fine grain sand (–200 mesh). Shipping costs are often multiples of original cost of the sand, and therefore manufacturers seek acceptable local sources of raw materials.

Limestone is the source of calcium and magnesium. It is available as a high-calcium limestone and consists primarily of calcite (95% $CaCO_3$) or as a dolomitic limestone, a mixture of dolomite, $CaMg(CO_3)_2$, and calcite. High-quality limestones contain less than 0.1% Fe_2O_3 and approximately 1% silica and alumina. The mineral aragonite (98% $CaCO_3$) is another source of CaO. Large deposits of high-purity aragonite exist near the coast of the Bahamas.

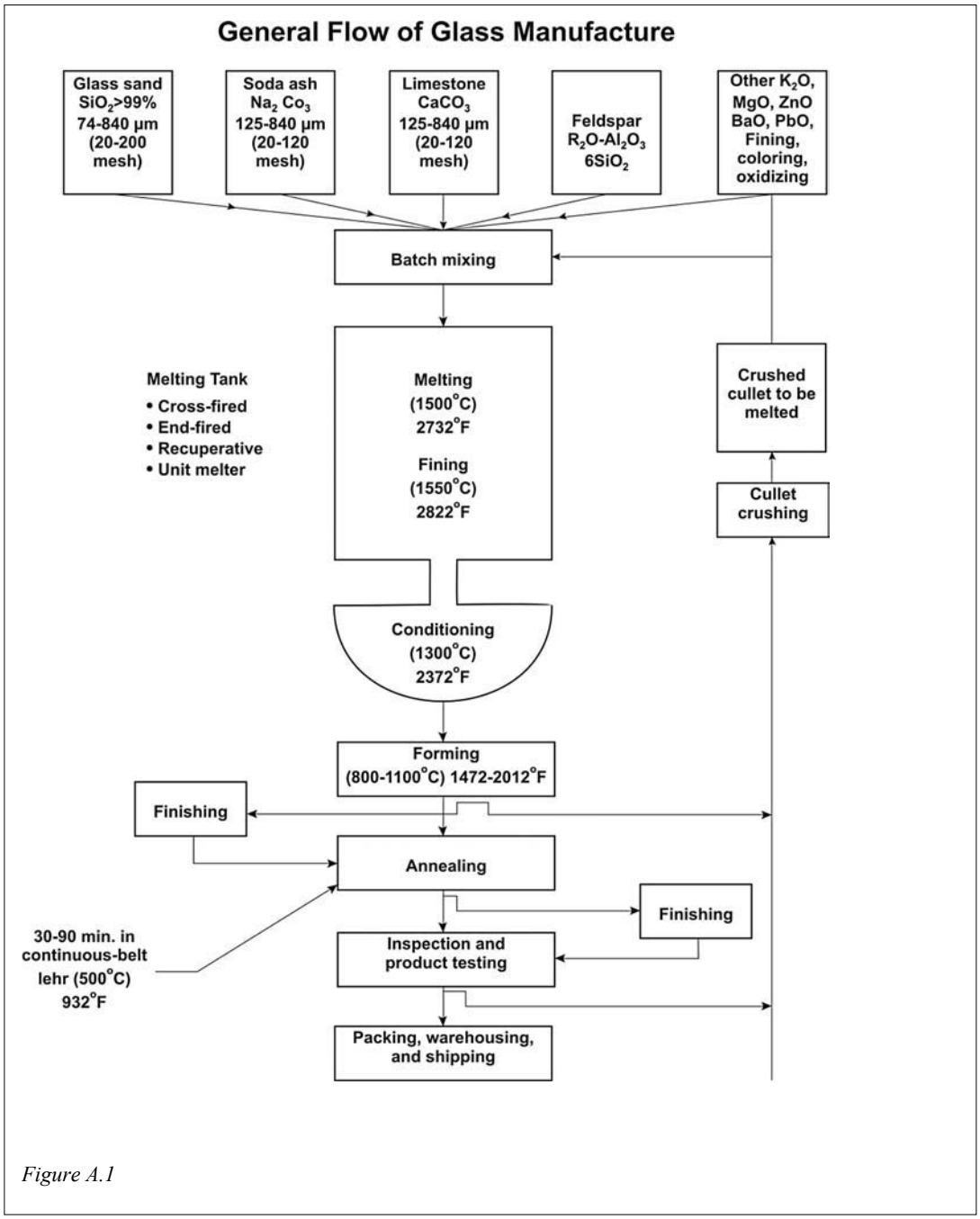

Figure 1.1. General Flow of Glass Manufacture

The amount of soda ash (Na_2CO_3) produced by the Solvay process has decreased, and most soda ash now comes from the Trona, WY, deposits (trona, Na_2CO_3 -$NaHCO_3$-$2H_2O$). Caustic soda (NaOH) solutions may be used in wet batching processes as a source

of soda. Other raw materials include boron, generally from deposits in California or Turkey. Either anhydrous borax or boric acid is used, but their consumption is decreasing because of the energy required to produce them. Mineral ores such as colemanite, rasorite or ulexite are now used in addition to boric acid or penta-aquo borax ($Na_2B_4O_75H_2O$) when possible. Feldspar and nepheline syenite are common mineral sources of alumina. Litharge is used as a source of lead oxide for the manufacture of lead glasses. Sulfates or nitrates oxidize other oxides in the glass and control fining reactions.

Powdered anthracite coal is a common reducing agent in glass manufacture. Fining agents remove the bubbles in the molten glass and include sulfates, halides, peroxides, chlorates, perchlorates, CeO_2, MnO_2, As_2O_3 and Sb_2O_3. They react by release of oxygen or sulfur trioxide, or by vaporization as in the case of halides. Controlled decomposition of sodium sulfate with powdered coal is used to fine many soda-lime compositions.

Common colorants for glass include iron, chromium, cerium, cobalt, nickel and selenium. Small amounts of iron are sometimes desirable for color and controlled radiant heat transfer during melting. Ferrous sulfide or iron pyrites produce amber-colored glass used in the container industry. Iron chromite is a source of chromium for green container glasses, whereas small amounts of cobalt and nickel oxides added to flint glass decolorize the yellow-green color that results from iron contamination. Selenium with iron and cobalt yields a bronze color. Ceria is used to increase ultraviolet absorption in optical or colorless soda-lime glass and to protect glasses from x-ray browning.

Cullet, or broken glass, is used as a batch material to enhance glass melting and to reduce the amount of dust and other particulate matter that often accompanies a batch made exclusively from raw materials. Some forming operations, for example, the ribbon machine, generate as much as 70% waste glass, which must be recycled as cullet. More efficient operations, such as those used in the container industry, may require the purchase of cullet from recycled glass distributors or other sources. Typically, 10–50% of a glass batch comprises cullet.

Melting and fining depend on the batch materials interacting with each other at the proper time and in the proper order. Therefore, care must be taken to obtain materials of optimum grain size, to weigh them carefully, and to mix them together intimately. The efficiency of the melting operation and the uniformity and quality of the glass product are often determined by the batch preparation. Batch handling systems vary widely throughout the industry, ranging from manual to fully automatic. Each batch material is stored in its own bin and the correct amount, determined and controlled by a computer, is weighed directly from the bin onto a conveyor belt that feeds directly into a mixer. Alternatively, sometimes only the gross weighing is made automatically and the final dribble feed is controlled manually. For small tanks and pot furnaces where the composition changes frequently, the batches are sometimes weighed into a bin or hopper. Often the weighing step is the most crucial in small tank operations, which are the most sensitive to fluctuations and often melt the types of glasses that must meet the most rigid specifications.

Wet mixing and batch agglomeration (pelletizing or briquetting) are coming into vogue for several reasons. A wet batch (3–4% water) prevents dusting, controls air pollution, and ensures homogeneity, therefore increasing melting efficiency and glass quality. Especially in batches with raw materials of varying grain size, a wet batch prevents particle segregation because of fine particles settling to the bottom of the bin. The homogeneous batch melts more efficiently because all of the batch materials are more

intimately in contact with each other and also in the correct proportion. Homogeneity can be assured by agglomeration into pellets or application of pressure to form briquettes.

1.2. Technical description of glass fusion/refining

Commercial glass is based upon a fusion reaction between a number of oxide components at high temperatures that yields a non-crystalline product when cooled to a rigid state. Glasses are characterized by their atomic structure, which lacks long-ranged periodic order. At the atomic level, then, glass resembles a liquid, but it retains the same molecular structure at room temperature. For this reason, glass is referred to as a "supercooled liquid." Unlike crystals, glasses do not have a sharp melting point.

In today's glass melting furnaces, a well-mixed batch of raw materials formulated to yield the required glass chemistry is continuously charged to the furnace. For soda-lime glasses (container and flat), these raw materials are silica sand, feldspar, soda ash, limestone, dolomite and salt cake (sodium sulfate). Borosilicate and lead glasses would also use borates and lead oxides. The batch floats on the glass melt and is heated by the radiation of the flames in the combustion chamber and the transfer of heat from the hot glass melt. Several chemical and physical changes occur during the heating of the raw materials. Solid-state reactions between particles of the raw materials result in the formation of eutectic melts. The batch particles dissolve in this melt, often accompanied by dissociation reactions, which result in the formation of gaseous components such as carbon dioxide and water vapor. The dissolution of all solid particles, homogenization, and the removal of gaseous products are the producer's main concern in melting commercial glass quality.

Evaluating alternative glass melting technologies must include a review of the industry's perspective on the basic nature of commercial glassmaking mechanisms. Two levels of detail, one simplified version and the second more detailed, are provided to explain the glass fusion process.

The maximum temperatures encountered in refractories or on the glass surface in glass furnaces are container glass, 2912°F (1600°C); flat glass, 2948°F (1620°C); special glass, 3002°F (1650°C); continuous filament, 3002°F (1650°C); and glass wool, 2552°F (1400°C). The mean residence time of the molten glass in industrial furnaces varies from 20 to 60 h. The quality of the glass product is highly dependent on the glass melter temperature, the residence time distribution, the mean residence time, and the batch composition. In general, three processes are distinguished in the melting tank: the melting process, the refining process, and the homogenization process (both chemical and thermal). These three essential glass melting processes may partly overlap with each other inside the furnace.

Traditional glass formation involves placing properly formulated and prepared raw materials onto the surface of previously formed molten glass. Additional thermal energy is applied to drive a series of basic mechanisms to produce more molten glass into the system. Most commercial glass produced on a large scale is melted in continuous furnaces, either in fossil fuel–fired tanks or in electric furnaces with a cold cap or "blanket."

Batch melting in combustion furnaces
In typical fossil fuel–fired furnaces, batch is fed into the furnace on the top of the pool of molten glass in piles that melt from both above and below. Overcoming the low heat conductivity of batches is the major obstacle to rapid heat transfer. The heat absorbed in a thin upper layer of the pile converts the batch into a liquid mixture of melt, undissolved silica grains and gas bubbles, all of which flow down along the inclined surface. The hot molten glass under the pile contributes some heat to the batch at its lower interface.

Cold top electric melting
In all-electric furnaces, a batch covers the entire melter's glass surface with a blanket that is heated from within the molten glass. A typical batch particle moves vertically, first entering the upper zone where it is heated by percolating reaction gases. Thus its temperature increases only slightly above that at which it was charged. It loses free water (batch is usually charged wet to prevent dusting) and absorbs volatile components rising from the lower reaction zone, which are only several centimeters thick. In this zone, most of the heat is absorbed and the temperature rises sharply to that of molten glass. The extent to which evolving gases can freely rise through the molten layer and not build up a foam layer will determine one important heat transfer efficiency for the system.

SiO_2 is the major glass-forming oxide for all container, flat, fiber and tableware glasses produced commercially. Crystalline silica melts above 3100°F (1704°C). By adding fluxing ingredients, such as alkali (Na_2O, K_2O) or borates (B_2O_3), the melting point drops significantly due to eutectic melting. Stabilizers (CaO, MgO, Al_2O_3) are added to improve chemical durability and forming properties. Raw materials economically available to provide these modifying oxides are formulated into a batch. The resultant material is converted from a crystalline structure to a vitreous state glass. The specific combination of all oxide species in the final glass defines its physical properties.

Thus, glass formation involves a number of key steps, starting with properly formulating specific raw materials to contribute required oxides. The properly prepared batch ingredients must be kept in close proximity as they are heated. A series of chemical reactions and physical processes initiate some components' melting and convert others into new, intermediate compounds. Melting can be divided into several stages: heating, primary melting, grain solution, fining and homogenization, and conditioning, all of which require very close control.

The process includes a variety of transfer modes: fluid flow, heat transfer, and mass transfer. Before the batch totally melts, it undergoes a number of processes, such as drying, removing chemically bonded water, hydrothermal reactions, crystalline inversions, and solid-state reactions. Preheating raises the batch as rapidly as possible to the melting temperature where significant reactions occur that generally result in a distinct change in the flow characteristics of the batch.

Some of the raw materials with lower melting temperatures or fluxes begin to melt first (1382–2192°F or 750–1200°C), then the sand dissolves into these melted fluxing agents. The silica from the sand combines with the sodium oxide from the soda ash and with other batch materials to form silicates. At the same time, large amounts of gases escape through the decomposition of the hydrates, carbonates, nitrates, and sulfates, giving off water, carbon dioxide, oxides of nitrogen, and oxides of sulfur. The glass melt finally becomes transparent and the melting phase is completed.

Dissolution of the more refractory (higher-melting) grains, such as sand, is accelerated by fluxes (lower-melting materials). The decomposition of alkali carbonates (Li_2CO_3, Na_2CO_3, K_2CO_3) or alkaline earth carbonates ($MgCO_3$, $CaCO_3$, $SrCO_3$, $BaCO_3$) results in a similar fluxing action on sand and other minerals, notably alumina-containing ones such as nepheline syenite and feldspars. Undissolved grains (stones) can be introduced either when the refractory grains fail to react completely or because the reactants are not intimately mixed. Increasing the melting temperature aids in dissolving stones and compensates for minor deviations from an ideally prepared and delivered batch. Eventually, the final glass chemistry is reached when all raw materials have reacted and intermediate compounds have combined into the end product.

Gas is evolved during the first stages of melting because of (1) the decomposition of the carbonates or sulfates, or both; (2) air trapped between the grains of the fine grained batch materials; (3) water evolved from the hydrated batch materials; and (4) the change in oxidation state of some of the batch materials. Hot gases evolving from batch melting and refining reactions percolate through the pile and bubble through the upper molten layer. As this mixture approaches the maximum temperature, fining agents, which are minor components deliberately added to the batch, begin to release large volumes of gas that diffuse into existing bubbles and nucleate new bubbles on undissolved grains. Bubbles rapidly increase in volume and quickly leave the melt, stirring and homogenizing it vigorously.

Some of the bubbles remain trapped in the final melt and have to be removed by refining agents or by using temperatures several hundred degrees higher than the temperature necessary for melting. The process of clarification of the molten glass is called refining. Refining mechanisms include both thermal and physical means. Increasing temperatures expand the volume of gases, making the glass more fluid, and bubbles rise to the surface more rapidly. Chemical fining agents are materials intentionally added to the batch that promote the evolution of gases generated during the fusion process at elevated temperatures. Some processes make the bubbles larger in size, which can rise more quickly out of the melt. Others promote more physical agitation of the less soluble types of gases.

Chemical compositions of the individual raw materials and their grain characteristics are variables that can influence intermediate chemical compositions leading to a final glass oxide analysis. Seed conditions can be related to batch redox formulation, batch preparation and handling, furnace temperature control, and even glass reactions to refractories. Each area of the operation needs to be standardized and optimized by measurements and control procedures.

Other quality aspects of the glass can deteriorate in this stage due to refractory corrosion, volatilization, segregation, and reboil. For the production of good-quality glass, it is important that the batch is well mixed and properly treated, that the maximum melting temperature is as high as possible, that refining agents that liberate gases at a maximum temperature are present, and that homogeneity-deteriorating processes are prevented.

When the homogenized melt cools down, the chemical solubility and partial pressures of the various gases present can cause very small remnant bubbles to be quickly adsorbed into the glass network, and thus disappear. This process is usually enhanced by the release of oxygen through redox control mechanisms, usually via the addition of sulfates into the batch.

1.3. Detailed description of the fusion process

The following detailed description of the glass-forming process is a composite of previous published work by Frank Woolley (Corning Glass), Pavel Hrma (Pacific Northwest National Laboratory), Lubomir Nemec (Prague Laboratory of Inorganic Materials of ICT and ASCR) and others. It is included in this report to allow for greater appreciation of how alternative melting technologies maintain conformity or conflict with traditional understandings of how glass forms, and which aspects of alternative melting systems are consistent with optimizing the process of commercial glass formation.

Solids heating/solid-state reactions

The initial stage comprises drying, removing chemically bonded water, hydrothermal reactions, crystalline inversions, and solid-state reactions. Glass batch is a multi-component mixture of granular materials in which the reaction kinetics depend on the contact surfaces between individual solid components. Shapes, sizes, and size distributions of particles, the quality of their surfaces (rough, smooth, crystalline, amorphous, cracked), degree of mixing (agglomeration, segregation), and compactness (pellets, briquettes, pressed compacts, loose batches) are all factors that can affect the reactions and are factors that change during the melting process.

Heating the batch from room temperature to around 1110°F (599°C) can be treated as the first stage in the melting process and can usually be considered only as a heat transfer problem. Due to the low thermal conductivity of the batch materials, the melting process is initially quite slow, allowing time for the numerous necessary chemical and physical processes to occur. As the materials heat up the moisture evaporates, some of the raw materials decompose, and the gases trapped in the raw materials escape. Release of free water from batch commences at 122°F (50°C) and reaches a maximum rate at 212°F (100°C). Chemically bonded water is liberated at still higher temperatures. Reactions of batch components with water or steam may convert a substantial amount of silica into silicates.

Granular materials possess a high surface energy that significantly contributes to the melting process at all stages. Initial reactions involve sintering, solid-state (sub-solidus) reactions at the contacts between grains of different batch chemicals, and decomposition reactions.

Solid-state reactions between batch constituents occur at temperatures lower than that at which the first liquid melt phase appears in the batch, and involve only solid and gaseous phases. The solid-state reactions can involve only one constituent (such as decomposition of limestone) or two or more constituents (such as formation of sodium metasilicate from quartz and soda ash). Endothermic and exothermic reactions also take place, the majority being endothermic. The heat consumed in completing the chemical reactions amounts to only 18–24% of the total needed to raise the melts to 2725°F (1496°C).

Examples of solid-state reactions are the decomposition of limestone, the formation of sodium metasilicate from quartz and soda ash, the formation of sodium-calcium (or potassium-calcium) double carbonate, and the formation of numerous silicates. Contact between soda ash and quartz determine a favoured initial reaction product: sodium metasilicate. This forms oriented crystals at the interface between sodium carbonate and

quartz. If limestone and sodium carbonate are in preferential contact, they form a double carbonate, $Na_2Ca(CO_3)_2$, at 752–932°F (400–500°C).

If the batch particles are fine and well mixed and if there is sufficient time for the processes to progress, solid-state reactions may consume large portions of silica and decompose most of the carbonates, and thus can be a significant factor in promoting higher melting rates. This emphasizes the importance of optimum mixing for all components to remain in close contact with complementary batch constituents. They are affected by pelletizing, briquetting, preheating, prereacting or presintering. They can be controlled by heat transfer, volume or surface diffusion, or the rate of gas removal. This is an avenue to accelerate melting rates. Some efforts to agglomerate the batch have confirmed this principle.

Liquid phase/interactions with solids

Liquid phases are formed from the melting of batch constituents and various eutectic mixtures. Typical eutectic mixtures for soda-lime-silica glasses are those between sodium and calcium carbonates, formed at 1427°F (775°C), and that between sodium disilicate and silica at about 1472°F (800°C), which reacts with additional soda to precipitate metasilicates at temperatures below 1544°F (840°C).

During the first permanent liquid stage, vigorous melting reactions occur. This stage of the fusion process is characterized by the presence of molten salts of low viscosity, glass-forming melts, and intermediate crystalline compounds such as double carbonate or silicates. Unreacted batch constituents, intermediate crystalline reaction products, and liquid melt phases are all involved in a complex mutual interaction.

Inorganic salts melt, forming low-temperature eutectic liquid phases. Generally, oxo-anionic salts are perfectly miscible in molten state. These melts have a low viscosity and wet the solid particles, but also tend to segregate by drainage. Their presence accelerates sintering and the reactions that take place between individual batch particles. The primary melt participates at the formation of intermediate crystalline forms, which often precipitate from it, to be later dissolved in the glass-forming melt. The primary melt reacts with solid components, releasing gases such as CO_x, NO_x, O_2, and SO_x. A fraction of inorganic salts remains dissolved in glass; thus glass can contain some CO_2 and up to 1 mass% SO_3. The gas phase may also survive in the form of intermediate solids**.**

Molten inorganic salts and intermediate glass forming melts, which are partly mutually soluble, assist reactions with solids by dissolving them and transferring constituents into the molten mixture more rapidly. If two salts are present together, they mutually dissolve. This has two effects: the melt forms at a lower temperature than the melting point of either salt or the salts mutually dilute each other.

These low-melting-temperature inorganic salts, such as Na_2CO_3, dissolve some batch components are wet refractory grains, thus enhancing reactions at temperatures at which otherwise only slow solid-state reactions would occur. For example, K_2CO_3 and Li_2CO_3

increase reactions in soda-lime-silica batches. Similar effects can be achieved by the addition of NaCl or NaF, CaF_2 , and combinations of these salts with each other or with Na_2SO_4 .

In a sodium carbonate–silica sand mixture, any of three possible crystalline compounds (sodium disilicate, sodium metasilicate, and sodium orthosilicate) can be formed when the first melt appears. The beginning of the reaction path is independent of the soda/silica ratio. The rate of reaction depends on the quartz surface area per unit mass of sodium carbonate, whether the change in this surface area is due to a change in silica grain size or in silica content.

In soda-lime-silica batches, sodium carbonate reacts with both limestone and dolomite to form double carbonate—$Na_2Ca(CO_3)_2$—at about 932°F (500°C). Unreacted sodium carbonate, double carbonate, and eutectic Na_2CO_3-$CaCO_3$ melt-react with silica, producing CO_2. Sodium metasilicate is formed when the heating rate is very slow or the quartz is very fine, whereas sodium disilicate and double carbonate precipitate when heating is fast or the silica particles are large. Consistent furnace temperature and atmosphere are helpful in maximizing the rate at which these reactions can precede.

If cullet is a batch component, glass-forming melt is present when the temperature exceeds the glass-transition temperature of the cullet. Aggressive molten salts attack cullet at temperatures as low as 572°F (300°C), enriching the surface with alkali oxides, thus making cullet sticky at a lower temperature.

When sodium carbonate melts at 1562°F (850°C), a second liquid phase is produced. This silicate melt readily dissolves in the carbonate melt. Liquid sodium carbonate vigorously reacts with silica grains, thus evolving carbon dioxide. When all sodium carbonate is decomposed, the evolution of carbon dioxide stops and further reactions in the mixture of silicate melt, silica, and crystalline sodium silicates are controlled by diffusion in the melt without the beneficial assistance of convection promoted by gas liberation.

The first liquid phase appears with increasing temperatures on the surface of the batch. Mass transfer is assisted by physical flow on the surface of the individual raw material particles. Wetting, connectivity of the liquid phase, and its viscosity affect interaction among solids, liquids (several immiscible liquids may be formed), and gas. Numerous new crystalline phases may precipitate (liquid to solid) during the process, and the melt's range of chemical composition is wide.

The glass-forming melt is initially distributed in the form of drops or thin layers coating solid particles. As its amount grows, the islands of melted components join into a connected body with open pores (or vent holes through which gases can easily escape), or closed pores (bubbles that either blow the mixture into a foam or, if viscosity is low, move upward due to buoyancy). The mixture becomes a fluid with suspended refractory grains and bubbles.

Primary-melt liquids usually wet and coat solid particle surfaces, which enhances precipitation of solid products. This precipitation keeps the fraction of glass-forming melt in the mixture at a low level, so the diffusion distances through liquid films separating solid particles are short. Motion of melt is hindered by a dense network of precipitated crystals and is promoted by the evolution of gaseous products and surface tension gradients. As the amount of liquid phase finally increases, drops and films of liquid become connected into larger and larger areas, resulting in the interconnecting of all liquid phases.

The degree of melt conducted affects batch permeability and heat conductivity. Gases generated by the reactions can initially escape freely through open pores. When the melt becomes interconnected, batch porosity becomes closed, and the mixture is blown into foam that can exceed the melt volume many times. Thermal conductivity of the melting batch strongly depends on both melt fraction and total gas content.

Gas evolution

There are two kinds of batch components, those essentially preserved in the glass as oxide forms and those lost due to their volatility. Decomposition of the raw materials results in the liberation of gases (CO_2, H_2O), refining gases (SO_2, O_2), and volatiles. These gases are inherent components of glass-forming raw materials and are introduced to contribute to the melting process, but only a small fraction remains in the final product.

Soda ash, acting as a flux, melts at 1560°F (849°C). This is a very significant stage in the melting process as it is followed by rapid and violent reaction in the melt due to the release of carbon dioxide. The agitation from gas evolution acts as a stirring mechanism and thus develops a homogenizing and refining effect.

Minor refining-agent ingredients are deliberately introduced into batches to produce bubbles at high temperatures. They over saturate the glass with gases and force the small carbon dioxide or bubbles from air trapped within the melt to grow and quickly leave the melt. Refining agents themselves produce bubbles, usually nucleated on solid surfaces that stir and effectively homogenize the melt.

If gas evolution is too vigorous or melt viscosity relatively high, foam occurs. In commercial glass batches containing carbonates and fining agents, the carbonate foam is produced at 1832–2102°F (1000–1150°C). This foam can be reduced or even suppressed by sulfate or other salts that do not mix with molten silicates. The sulfate foam is generally produced at 2597–2732°F (1425–1500°C). Carbon is a minor component of some sulfate-containing batches that functions to control the redox state of the melt. Solubility of sulfates in glass varies, with redox reactions controlling SO_2 and SO_3 .

Using fine grains is more effective than using melting agents because melting agents do not affect the end of decomposition of carbonates. The last CO_2 leaving the mixture causes carbonate foam and gaseous inclusions that must be subsequently refined. Decarbonation of batches and silica–sodium carbonate reaction products are also

promoted by the addition of fine-grained refractory raw materials other than silica, such as aluminum hydroxide or alkali-aluminosilicates.

The evolution of the glass-forming melt composition (an element of the reaction path) depends on the batch makeup. For example, fine silica dissolves early, producing a high-viscosity melt. Such a melt traps a large number of small bubbles that are difficult to remove, and is slow in dissolving refractory components (alumina, zirconia, etc.). Larger grains of silica sand, on the other hand, allow the glass-forming melt to retain low viscosity even at lower temperatures. This melt releases gas more rapidly, homogenizes more easily, and dissolves the remaining solids (from the batch or intermediately formed) more efficiently (because of higher diffusion coefficients and better stirring by escaping gases). Only silica grains survive to high temperatures, where they provide nuclei for fining bubbles.

Refractory component solution

By the time the temperature reaches 1832–1994°F (1000–1090°C), the melting reactions between all except the most refractory raw materials (i.e., silica, feldspar, chromites, etc.) have proceed very rapidly. Refractory particles are defined as those with a melting point higher than the maximum temperature used to produce glass. These are mainly silica and alumina source grains in the melt (about 85% of which will have already reacted and dissolved). The final stages of the melting process consist of the dissolution of these remaining refractory materials.

These reactions take place much more slowly, since by this time the newly formed glass has become much more viscous (rich in silica) and the agitation from gas-liberating reactions have completed. For this reason, compositions that are more difficult to melt will require much finer particle-size specifications. The stage at which all the crystalline materials have disappeared and been incorporated into the melt is known as the batch-free time.

Some refractory components dissolve at early stages of melting because their particle size is small (for example, MgO produced by decomposition of dolomite or CaO from decomposition of limestone). In most commercial furnaces, silica grains dissolve slowly in molten glass unless they can contact other fluxing components. Some batch components, such as sulfates, reduce the surface tension and allow more wetting to promote quicker reactions.

The time to dissolve depends on the original grain size, the dissolution rates of silica in carbonate and silicate melts, and the grain fraction dissolved in the carbonate melt. Most silica reacts during the stage of vigorous reactions with the molten carbonates. When a relatively unreacted silica grain exits the melting system, it is usually a result of segregation. The agglomeration of sand particles is another unfavorable condition for grain dissolution.

The thickness of concentration layers (boundary layers) around refractory grains depends on the melting history. If the history is such that the melt is homogeneous, the concentration layer will be thin and dissolution will proceed rapidly. If, on the other hand, a single grain of silica is surrounded by an almost-saturated melt and the silica content decreases over a long distance, dissolution will be slow. Either of these situations can occur in glass melting. A mechanism of imposing shear forces on these layers can significantly increase reaction rates.

Carbonates are the most common salts used, although other salts are added as melting agents. The combining of mutually soluble salts promotes reactions at lower temperatures, but they do not affect the temperature at which the last carbon dioxide molecule is driven off. This temperature can be reduced if finely ground materials are used or if the heating rate is slow. The atmosphere is important, mainly because of its effect on CO_2 removal. As carbonates disappear, silicate melt is formed. Silica is usually the last solid phase to dissolve. If its dissolution is slow, segregation may prevent completion of the conversion.

The quality of the resulting glass, based on the number of undissolved sand grains in the bulk, the surface of the melt, and the number of seeds, increases as the temperature at the end of CO_2 release decreases. At a slow heating rate, sodium carbonate reacts preferentially with silica and moves away from lime; at a high heating rate, sodium carbonate reacts preferentially with lime.

Different temperature histories lead to different conditions for the final dissolution of refractory grains, bubble removal, and homogenization. In the extreme case of a very slow temperature-increase rate, the batch will attain a relatively high degree of conversion as soon as the temperature is reached at which the reactions are rapid enough. This will lead to a high silica content in the initial melt and, hence, high liquid-phase viscosity at low temperatures.

At the other extreme of a very fast temperature increase rate, all solid reactions and early melting reactions will be skipped. The carbonate melt will be present at high temperatures, at which the reactions are vigorous. After full decomposition of carbonate, residual silica grains will be embedded in a melt of a relatively low silica content. This process is preferred for high production rates.

Buoyancy moves bubbles and solids through the melt, further enhancing diffusion and stirring the melt. Though convection, whether buoyancy- or surface forces–driven, greatly enhances diffusion, the diffusion-controlled dissolution is still relatively slow. Up to 90% of the sand-grain volume is consumed within the batch blanket, yet dissolving the remaining 10% in the viscous melt close to saturation takes most of the residence time to dissolve. Also, the motion of slowly dissolving solids can lead to partial segregation. Finally, small grains readily agglomerate. Agglomeration causes a local increase of the refractory component to a level above the solubility limit. Agglomerated and segregated grains tend to persist, and these limit the conversion rate in the final stages of melting.

The presence of some distinct solid particles at high temperatures is beneficial. Since the solubility of gases decreases as silica content increases, solid sand grains provide sites for nucleation of gas bubbles and set up localized convective flow. Also, for efficient diffusion and convection melting reactions and destabilization of foam conditions, it is desirable that the viscosity of the intermediate liquid material phases be as low as possible. This is achieved by delaying the complete dissolution of silica grains until all other processes except refining are finished.

Chemical homogenization

Glass-forming melt is either present from the beginning in the form of cullet added as a batch component or is generated when or as the early borate, borosilicate or silicate eutectic melts. This high-viscosity melt slows down melting reactions, which continue via diffusion. Melt homogenization proceeds mainly through the growth and motion of bubbles, whether in the batch blanket or during fining. The viscous glass-forming melt traps gases; large numbers of growing bubbles tend to expand the reacting mixture into foam (so-called primary foam). Bubbles stretch the membranes of the viscous melt until they burst and shrink back. This is an efficient homogenization mechanism.

Both homogenization and segregation occur within the batch blanket. Low-viscosity molten salts can drain through open pores between refractory particles, enriching the lower layers of batch with fluxes. However, in a steady state, local enrichments do not affect the homogeneity of the final product. An example of local enrichment is refluxing. For example, SO_x from deeper and hotter layers of the batch condenses in the colder upper layers, where SO_x turns into sodium salts that drain down to be partly absorbed in the glass and partly decomposed. This is particularly true for cold-top electric melters.

Batch segregation can lead to different glass compositions. Only minor levels of demixing can be overcome via homogenizing mechanisms in the glass fusion process. When recycled cullet has a different composition than the target glass composition, it is necessary to rely upon a variety of homogenization mechanisms to obtain a chemically consistent final glass.

Convection currents within the bulk melt generally operate on a larger scale than bubbles in batch piles. For these currents to be effective, high velocity gradients are necessary. These gradients stretch and thin melt inhomogeneities, thus helping their attenuation by diffusion. However, high-viscosity inclusions (such as alumina-rich inhomogeneities) should be avoided because high-viscosity inhomogeneities are difficult to stretch and the diffusion coefficients of their components are small. Some compositions rely upon bubblers in the melter to accentuate mixing and assimilation of inhomogeneities.

The batch pile, or the cold mixture of raw materials, is melted not only at the surface, but also from the underside by the molten glass bath. Relatively cold, bubbly glass forms below the bottom layer of batch material and sinks to the bottom of the tank. Appropriate convection currents must bring this material to the surface, since fining occurs in tank furnaces primarily at the surface of the melt, where bubbles need to rise only a short

distance to escape. If thermal currents flow too fast, they inhibit fining by bringing the glass to the conditioning zone too soon. Guiding walls or weirs can be built into the inner tank structure to create ideal glass flow paths.

Redox state

The oxidation-reduction (redox) state of glass is defined as its partial pressure of oxygen. It can be measured directly using electrochemical methods, or indirectly through the analysis of redox couples such as Fe^{2+}/Fe^{3+}. If transition metal oxides are glass components, redox influences glass color. Redox is also important for batch melting reactions and fining. Between the stage of vigorous reactions and the final stage, there is a temperature gap during which redox or other gas-liberating reactions can produce oxygen or other gases and generate foam. For example, the reaction of nitrates and sulfates with other glass components is accelerated (and proceeds at lower temperatures) when reducing agents such as carbon, are present. Arsenic, antimony and many transition-metal oxides can function as fining agents that release oxygen at elevated temperatures; their functioning depends on the presence of oxidizing agents, such as nitrates, in the batch.

Each of these reactions is intended to promote the evolution of refining gases at appropriate stages of the melting process. Varying the redox (oxidizing and reducing) components within the formulated batch will have a varying impact upon gaseous evolution within the melting process.

Excessive quantities of bubbles produce foam. Foaming can interfere with the melting process, usually by blocking heat transfer and upsetting the steady state. Also, foam covering the free surface of glass retards heat transfer to the melt. The amount of foam depends on the gas generation rate and the factors that influence foam stability. These factors are not well understood, although it is known that glass films easily rupture when subjected to mechanical, thermal, or chemical shocks.

With conversion to oxy-fuel from air-fuel and with no modification to the fining package, many glass manufacturers have noticed increased thickness of foam and difficulties in surface combustion penetrating through the foam. The change to oxy-fuel increases the water vapor above the glass from typically 14% with air fuel to greater than 60% with oxy-fuel. The quantity of water chemically absorbed as hydroxyls in the glass structure is nearly doubled as the relation follows a square root relationship. Quadrupling the water content doubles the chemically dissolved water. This doubling in water or hydroxyls is equivalent to the refining potential of 33% of the sodium sulfate introduced in a container glass batch. Reducing fining agents by 10–15% has been shown to reduce surface foam and to have no negative impact upon glass quality.

Refining

In the melting of glass, substantial quantities of gas are produced as a result of the decomposition of batch materials and to a much lesser extent from air trapped in the raw materials. Other gases are physically entrained by the batch materials or are introduced into the melting glass from combustion heat sources. Most of the gas escapes during the initial phase of melting, but some becomes entrapped in the melt and must rise to the

surface and escape from the melt. Some of the trapped gas dissolves in the glass, but other portions form discrete gaseous inclusions. These bubbles must be eliminated from the glass melt as they can cause defects in the finished product, affecting mechanical strength and appearance. Small bubbles remaining in the finished glass are called seeds. The concentration acceptable in the final product varies by glass segment. Processes to remove or reduce the level of seeds to commercial standards is known as refining or fining.

Most gases in the newly formed glass are remnants of raw material decomposition and entrained gas from air or combustion products. The upward movement of bubbles contributes to the physical mixing of the melt necessary to obtaining a homogenous material with optimal physical properties. The bubbles rise at speeds determined by their size and the viscosity of the glass. Large bubbles rise quickly and contribute to mixing, while small bubbles move slowly at speeds that may be slow with respect to the larger-scale convection currents in the furnace, and they are thus more difficult to eliminate.

The refining stage to remove objectionable gaseous inclusions relies upon a number of mechanisms. Bubbles rise to the surface roughly according to Stokes's law. Each bubble, during its trip through the glass melt, attracts new quantities of gas by diffusion from neighboring layers and by coalescence with other bubbles. Increasing the temperature of the glass will reduce its viscosity and expand the volume of the gas. This will allow the inclusion to rise by buoyancy to the surface and escape to the furnace atmosphere, which speeds up the fining process greatly. Another mechanism is absorption into the glass by solubility. Historically, these time and temperature mechanisms were relied upon for refining, and the furnaces were significantly rate limited.

High temperatures are conventionally provided in the refining zone to expedite the rise and escape of the gaseous inclusions by reducing the viscosity of the melt and by enlarging the bubble diameters. The energy required for the high temperatures employed in the refining stage and the large melting vessel required to provide sufficient residence time for the gaseous inclusions to escape from the melt are major expenses of a glassmaking operation. Therefore, it would be desirable to improve the refining process to reduce these costs.

The general principle of chemical fining is to add materials that, when in the melt will release gases with the appropriate solubility in the glass. Depending on the solubility of the gas in the glass melt (which is generally temperature dependent) the bubbles may increase in size and rise to the surface or be completely reabsorbed. Small bubbles have a high surface-to-volume ratio, which enables better exchange between the gas contained in the bubbles and the glass. Carbon dioxide and the components of air have limited solubility in the glass melt and it is usually necessary to use chemical fining agents to effectively eliminate the small bubbles generated by the melting process.

The release of gas at high temperatures, from fining agents or redox reactions of components, is beneficial for melt homogenization and fining, but can produce undesirable effects when gas bubbles accumulate under the floating batch. Excessively

bubbly or foamy layers under the batch blanket (particularly in all-electric melting) insulate the batch by blocking heat transfer. As a result, the melting rate is slowed down, or the melting process can be destabilized.

The most frequently used fining agent in the glass industry is sodium sulfate, sometimes called "salt cake," followed by sodium or potassium nitrates in combination with arsenic or antimony trioxides. These last two are more expensive, have associated environmental and health issues, and tend to be used mainly for the production of special glass. At approximately 2642°F (1450°C) (2192°F [1200°C] if reducing agents are present) sodium sulfate decomposes to produce sodium oxide (which is incorporated into the glass), gaseous oxides of sulfur, and oxygen. The oxygen bubbles combine with or absorb other gases, particularly carbon dioxide and air, thereby increasing in size and rising to the surface. The gaseous oxides of sulfur are absorbed into the glass, or join the furnace waste gas stream. In flat glass and container glass production, sodium sulfate is by far the most common fining agent. The predominance of sodium sulfate as the fining agent is due to its parallel action as an oxidizing agent for adjusting the redox state of the coloring elements in the glass. It is also the least expensive effective fining agent for mass-produced glass.

Nitrates are used to force trioxides to convert to pentoxides as low batch-charging temperatures. Arsenic trioxide is used for higher melting glasses, 2660–2732°F (1460–1500°C), and antimony for lower melting glasses, 2372–2552°F (1300–1400°C). Increasing glass temperatures revert the pentoxides back to trioxides with a release of oxygen, which provides very effective refining. As the glass cools, dissolution fining may occur; that is, oxygen bubbles are removed by reaction with the arsenic or antimony trioxide to form the pentoxide. Sodium nitrate can also be used as a fining/oxidizing agent, particularly if a high degree of oxidation is required. Calcium sulfate and various nitrates are sometimes used for colored glasses. Unfortunately, nearly all the NO_2 produced goes up the stack and is a significant contributor to the NO_x produced.

Gases relatively soluble in glass include water, SO_3 and O_2. Nitrogen (N_2) and SO_2 are relatively insoluble at glass-processing temperatures and do not dissolve easily. CO_2 and argon (from air entrapment) are somewhat soluble, depending upon the time and temperature of exposure. Each glass composition has a relative solubility constant for different gas species that is proportional to temperature. The extent to which thermodynamic equilibrium conditions occur will also influence solubility. This is because their solubility in glass is sufficiently high for resorption at lower temperatures where the glass is too viscous to allow bubble dissolution in a reasonable time.

Homogenizing/Conditioning

Batch segregation, melt segregation, volatilization, and temperature fluctuations, as well as refractory corrosion from tank lining material, cause compositional differences (cord, striae) within the melt. These inhomogeneities must be removed by diffusion and flow before the glass is cooled in the forehearth prior to delivery and forming. Vigorous fining action and convection current mixing help break up cord. Mechanical and static mixers continuously shear the glass to help active homogeneity.

Homogenization can also be aided by introducing bubbles of steam, oxygen, nitrogen, or more commonly air through equipment in the bottom of the tank. This encourages circulation and mixing of the glass and improves heat transfer. Some processes, for example, that for making optical glass, may use stirring mechanisms to obtain the high degree of homogeneity required. Another technique for use in small furnaces (particularly in refining special glasses) is known as "plaining"; it involves increasing the temperature of the glass so it becomes less viscous and the gas bubbles can rise more easily to the surface.

During a conditioning phase at lower temperatures, all remaining soluble bubbles are reabsorbed into the melt. At the same time, the melt cools slowly to a working temperature between 1652 and 2462°F (900 and 1350°C). In batch melting, these steps occur in sequence, but in continuous furnaces the melting phases occur simultaneously in different locations within the tank. The batch is fed at one end of the tank and flows through different zones in the tank and forehearth where primary melting, fining, and conditioning occur. The refining process in a continuous furnace is far more delicate. Glass does not flow through the tank in a straight line from the batch feeder to the throat where the glass reaches the working temperature for processing. It is diverted following thermal currents.

Volatilization/Chemical segregation mechanisms

The reactivity of batch, that is, the ease with which it can be converted into glass by an appropriate heat treatment, depends on the raw materials selected for use. Individual particle shapes and sizes, size distribution between particles, the quality of their surfaces, the degree of mixing, and compactness are all important factors affecting the reactions that are continuously changing during the glass formation process.

Treatment variables, such as batch humidity, packing density, and batch size, directly affect melting reactions in their initial stages, and affect it indirectly in their later stages, because later stages of melting are conditioned by the early history of the process. Addition of water reduces dusting and demixing and improves the contact between particles of raw materials. Pelletizing or briquetting changes the packing density and heat absorption, reduces demixing, and increases the internal contact surface area. Each of these factors helps minimize volatilization mechanisms of raw material components into the furnace atmosphere.

Cullet is a common constituent of most batches and can be viewed as a high-viscosity melt added to the batch. Cullet affects reactions with only one reactant differently than it does reactions with two reactants. Temperatures of gas-releasing reactions of a single reactant (such as the release of water from borax or decomposition of limestone) decreased as cullet concentration increases. This can be attributed to a decrease in the partial pressure of the evolved gas caused by its easier escape through the pores when unmelted cullet is present. Temperatures of gas-releasing reactions that require contact between two constituents (such as reaction between soda ash and silica sand) increase with increasing cullet content. This can be attributed to the diluting effect of cullet, making the specific contact surface between reactants smaller.

Melt evaporation is more appropriately characterized as volatilization. Attempts to model volatilization as a process controlled by simple diffusion within the melt or diffusion combined with interfacial reaction failed to account for observed concentration distributions, the time dependence of volatilization rate, and diffusivity data from independent experiments. Volatilization is often controlled by diffusion through the gaseous phase. Moreover, volatilization causes changes in surface tension and density of the melt, which leads to hydrodynamic instability that manifests itself as cellular convection. In extreme cases, volatilization leads to crystallization of silica inhomogeneities on the glass surface.

The vaporization mechanisms in industrial glass-melting furnaces depend primarily on glass batch composition, gas flow rate along the glass surface, composition of the gas phase, and temperature. Volatilization may be enhanced by reactions of glass components with components of the gas atmosphere. Constituents of the furnace atmosphere may enhance or reduce vaporization rates for certain glass components. Lime container glass contains a modest level of alkali (Na, K) vapors and sulfur compounds. Rotary wool glass contains both sodium and borate vapors. Textile fiberglass contains primarily borates. Lead oxides vaporize from TV funnel glass melters. Water vapor increases alkali vaporization from soda-lime and alkali lead glasses. The atmosphere of commercial glass furnaces never reaches saturation with components evaporated from the glass melt.

Furnaces

The conventional and most common way of providing heat to melt glass is by burning fossil fuels above a bath of continuously fed batch material, and continuously withdrawing molten, founded glass from the furnace. The temperature necessary for melting and refining the glass depends on the precise formulation, but is between 2372 and 2822°F (1300 and 1550°C). At these temperatures heat transfer is dominated by radiative transmission from the refractory superstructure structure, which is heated by the flames to up to 3002°F (1650°C), and from the flames themselves.

In each furnace design, heat input is arranged to induce recirculating convective currents within the melted batch materials to ensure consistent homogeneity of the finished glass fed to the forming process. The mass of molten glass contained in the furnace is held constant and the mean residence time is on the order of 24 h of production for container furnaces and can be as high as 72 h for some float-glass furnaces.

During melting, silica-based batches show certain common behavior features regardless of composition. Batch melting processes can be classified into three groups: particle melting, blanket melting, and pile melting. In particle melting, each batch particle undergoes the same temperature history. In blanket (cold top) melting, segregation and percolation may cause local de-mixing, but this does not necessarily affect homogeneity. Pile melting is a non-uniform process in which heat transfer, flow, melting reactions, and bubble removal are combined. Steep temperature gradients in the upper surface layer of the batch and cellular convection under the pile are typical.

Batch melting strongly depends on the overall geometry of the batch body or pile. The surface of the batch body determines how much heat is absorbed and how easily the melt will leave it. The shape and size of the batch also affect the rate at which the liberated gases are removed or reabsorbed.

About three-fourths of the pile is melted from its upper surface by heat radiated from flames and hot refractory materials of the furnace crown and walls; the rest is melted from the pile base by heat convection, conducted and radiated from the hot molten glass underneath. The heat coming from above is absorbed by a thin surface layer of batch that becomes liquid and flows down, thus exposing lower portions of the pile to heat, and by plunging a heavier drained melt product into molten glass. This is known as "ablative melting." A complex buoyancy flow pattern develops under the pile, driven by density differences due to concentration gradients and bubble swarms. These mechanisms make batch melting sensitive to geometrical configuration.

In gas-fired and in all-electric furnaces, the batch fusion is controlled by heat transfer, material flow and mass transport mechanisms. Flow controls the runoff from a pile and mass transfer operates in the final stages when all reactions are completed except for the dissolution of residual sand grains and bubble removal. Thermal conductivity sharply increases with the occurrence of a molten liquid phase. Bulk density is affected by gases that may evolve in large quantity and convert batch into a foamy mixture. Melt viscosity at a given temperature depends on the fraction of silica dissolved prior to reaching the final glass composition.

Denser primary melt liquid can sink from the pile's lower surface down into the already molten homogeneous glass, leaving behind batch enriched in silica. Homogeneity is restored by the stirring action of bubbles produced within the melt and some furnace convection mechanisms.

Pile melting is not advantageous for batches containing volatile materials because the large surface of batch exposed to the furnace atmosphere and the necessity of maintaining a relatively large free surface lead to considerable mass losses. In traditional gas-fired furnaces melting borosilicate compositions, batch piles are very flat to avoid aeration of these volatiles and the other fine batch particles.

Operating temperatures play roles in the melting, refining, and homogenizing mechanisms for obtaining desired glass quality. Inappropriate temperatures or atmospheric changes can trigger re-boil from the glass chemistry. A layer of foam from this type of reaction can act as a thermal insulating barrier retarding proper heat transfer. Difficulties can develop when establishing the most appropriate method (i.e., batch adjustments, operating temperature changes, or furnace atmosphere changes).

De-mixing may be caused by thermal diffusion or gravitational separation of melt stagnating in dead corners of furnace. Temperature history and the compactness of batches also affect segregation. Gradual heating and well-mixed and well-wetted batch

preparations are beneficial. These factors enhance the initial melting rate, which leaves smaller silica grains for later stages and thus reduces their buoyancy force.

When a part of sodium oxide is introduced by sulfate, the degree of segregation decreases as the fraction of sulfate increases. This behavior is attributed to better wetting of silica grains at early stages of melting if sulfate is added, which leads in turn to a more uniform spatial distribution of silica grains in the melt. The stirring action of bubbles produced by sulfate decomposition at high temperatures helps to overcome other mechanisms causing melt segregation. This helps remix the demixed melt and sweep other gas bubbles from the molten material, and decreases the time to dissolve refractory components.

Initial melting within a batch pile can be influenced by the furnace atmosphere. Levels of combustibles (CH_4, CO or C) above the melt on a continuing basis can be compensated for by adjusting batch redox components. Some ingredients, such as carbon or niter, are intentionally added for this purpose. Short-term variations can have some differing influences on the glass, as judged by the ferrous to ferric iron ratio or varying redox sensitive components such as SO_3. Cullet reuse can contribute significant redox influences from organic contaminants or non-standard glass compositions being present. The physical geometry of the batch piles can make these additions more or less effective. Well-wetted batch produces a batch pile with a high volume-to-surface ratio, and it also has a high saturation of water from initial vaporization.

The rate of volatile species from other materials can also be influenced by the furnace atmosphere. This is especially true for alkali and borates attempting to reach equilibrium with the atmosphere. Higher natural concentrations in the furnace atmosphere (due to longer dwell time in the melter) will result in lower volatile loss rates from the melt and greater retention in the glass. The higher concentration of water in the atmosphere of oxy-fuel-fired furnaces can significantly increase the rate of volatilization.

Raw material particle size ranges and properties can result in dusting properties being exhibited in the furnace environment. Some limestones have a “popcorn” decomposition effect called decrepitation, which requires extra batch-wetting efforts. Air and gas velocities will have an influence on the extent to which some of these reactions can influence glass chemistry and resultant quality. Regenerator plugging and superstructure refractory concerns must be addressed with the furnace’s influence on volatile condensate properties.

Similarly, charging practices can result in refractory concerns triggered by volatile dusting and condensate changes. These problems relate to the reactivity of certain chemical reactions that, over a period of time, can affect structural life issues and also jeopardize quality through reaction product contamination entering the glass.

Glass-forming constituents must be understood and controlled to minimize their influence on the dissolution of container walls, interactions with electrodes, evaporation, absorption of gases from the atmosphere, demixing and reboil. Refractory walls may be a source of stones, bubbles and inhomogeneities. Reboil reintroduces bubbles on reheating. In

downstream operations, these bubbles usually do not have enough time to resorb during cooling and defective glass quality results.

Melting furnaces represent a major capital investment for a glass manufacturing company, and they can have a significant effect on overall manufacturing costs. The choice is largely determined by a range of economic considerations. Production requirements including required quality, tonnage throughput for the required forming processing, environmental concerns, glass color and chemistry, fuel availability, operating costs, and site-specific constraints, all contribute to the type of furnace selected. Over 90% of the glass tonnage produced in the United States is melted in natural gas–fired regenerative furnaces, about half of which have the capability for supplemental electric boosting.

The main factor in choosing a melting furnace is the desired production rate and the associated capital and operating costs over the life of the furnace. An important aspect of the operating costs is the energy usage; in general, the operator will choose the most energy-efficient design possible.

Energy considerations

Glassmaking is a high-temperature operation and is very energy-intensive. Significant energy is inherently necessary to drive the process at modern production rates. This industry has striven to reduce energy consumption to the lowest levels practical. The choices of energy source, heating technique, and heat-recovery method are central to the design of the furnace. The same choices are also some of the most important factors affecting the environmental performance and energy efficiency of the melting operation.

Natural gas, oil and electricity are the primary sources of energy; light oil and propane are used as backups for curtailment periods. Natural gas is the preferred fossil fuel for glass melting in the United States, with heat content ranging from 900 to 1200 Btu/ft^3. Fuel oil has heat content between 135,000 and 155,000 Btu/U.S. gal. Heavy fuel oil (#4, #5, or #6) is viscous at low temperatures and must be heated before being fed to burners, where it is atomized with compressed air for combustion.

Comparing the actual energy consumption to the theoretical requirements, the efficiency of gas-fired regenerative furnaces is about 50%. Oxygen, when substituted for air, reduces the fuel required to melt a unit of glass. For a well-engineered soda-lime glass furnace, fuel reduction with conversion to oxy-fuel is typically 10–15%. Fuel savings can be greater when substituting oxygen for air in increasing temperatures for higher silicate glasses, furnaces having less effective heat recovery, or lower pull rate melters. Direct application of electrical energy to molten glass by electrodes melts glass more efficiently. The efficiency of electric melting is 2–3.5 times that of fossil fuels, but production of electricity from fossil fuel at the power plant is only about 30% efficient, and this is represented in its cost. Electric furnaces lose less heat from the stricture and there are no costly regenerators or recuperators to repair or replace. However, the most flexible furnaces are still electrically boosted fossil fuel tanks, where a combination of energy sources is used rather than a single fuel.

The other common energy source for glassmaking is electricity, which can be used either as the only energy source or in combination with fossil fuels. Resistive (Joulian) electrical heating is the only technique to have found widespread commercial application within the glass industry. Arc or plasma methods of melting glass have been evaluated, but have never reached commercial applications. Indirect electric heating has been used only for very small tanks and pot furnaces or for heating part of a tank (e.g., the working end or forehearth). Induction heating is an area of current interest.

In general, the energy necessary for melting glass accounts for over 75% of the total energy requirements of glass manufacture. Other significant areas of energy use are forehearths, the forming process, annealing, factory heating, and general services. The typical energy use for the container glass sector is typically furnace, 78%; working end/distributors, 4%; forehearth, 8%; lehr, 4%; and other, 6%. Although there are wide differences between sectors and individual plants, the example for container glass can be considered as broadly indicative for the industry.

In the United States, natural gas is the predominant energy source for melting, with a small percentage of oil firing and some all-electric melting. Forehearths and annealing lehrs are heated by gas or electricity, and electrical energy is used to drive air compressors and fans needed for the process. General services include water pumping, steam generation for fuel storage and trace heating, humidifying/heating of batch, and heating buildings. Some furnaces have been equipped with waste-heat boilers to produce part or all of the steam required. In order to provide a benchmark for process energy efficiency, it is useful to consider the theoretical energy requirements for melting glass. The theoretical energy requirements for melting has three components:

1. The heat of reaction to form the glass from the raw materials.
2. The heat required (enthalpy) to raise the glass temperature from 68 to 2732°F (20 to 1500°C).
3. The heat content of the gases (principally CO_2) released from the batch during melting.

The actual energy requirements experienced in the various sectors vary widely. They depend very heavily on furnace design, scale and method of operation. However, the majority of glass is produced in large furnaces and the energy requirement for melting is generally below 6 mmBtu/ton. Because glassmaking is such an energy-intensive, high-temperature process, there is clearly a high potential for heat loss. Substantial progress with energy efficiency has been made in recent years and some processes (e.g., large regenerative furnaces) are approaching the practical minimum energy consumption for melting, taking into account the inherent limitations of the processes.

A modern regenerative container furnace will have an overall thermal efficiency of 50–60%, with waste gas losses around 20% and structural losses making up the majority of the remainder. This efficiency compares quite well with other large-scale combustion activities, particularly electricity generation, which typically has an efficiency of around 30%. Structural losses are inversely proportional to the furnace size, the main reason being the change in surface area-to-volume ratio. Electrically heated and oxy-fuel-fired

furnaces generally have better specific energy efficiencies than fossil fuel furnaces, but the operating energy cost per ton of glass will typically be higher.

Some of the more general factors affecting the energy consumption of fossil fuel–fired furnaces are outlined below. For any particular installation it is important to take account of the site-specific issues that will affect the applicability of the general comments given below. These factors also affect the emissions per ton of glass of those substances that relate directly to the amount of fossil fuel burned, particularly NO_x and SO_2.

The capacity of the furnace significantly affects the energy consumption per ton of glass melted, because larger furnaces are inherently more energy-efficient due to the lower surface area-to-volume ratio.

The furnace throughput is also important, with all furnaces achieving their most energy-efficient production at the highest production rate. Variations in furnace load are largely market-dependent and can be quite wide, particularly for some container glass and domestic glass products.

As the age of a furnace increases, its thermal efficiency usually declines. Toward the end of a furnace campaign, the energy consumption per ton of glass melted may be up 15–20% higher than when the furnace was first commissioned.

The use of electric boosting improves the energy efficiency of the furnace. However, when the cost of electricity and the efficiency of electrical generation and distribution are taken into account, the overall improvement may be lower. Electric boost is generally used to increase the melting capability and life of the furnace, as well as to reduce emissions (per ton of glass melted), rather than to improve energy efficiency.

The use of cullet can significantly reduce energy consumption, partly because the chemical energy required to melt the raw materials has already been provided. As a general rule, each 10% increase in cullet usage results in an energy saving of 2–3% in the melting process.

Oxy-fuel firing can also reduce energy consumption, particularly in smaller furnaces. The elimination of the majority of the nitrogen from the combustion atmosphere reduces the volume of waste gases leaving the furnace by 60–80%. Therefore, energy savings are possible because it is not necessary to heat the atmospheric nitrogen to the temperature of the flames, and a significantly lower volume of hot combustion products exit the furnace.

Environmental considerations

Pollution from soda-lime glass production is minimal and mostly caused by sodium sulfate particulate. Similarly, borosilicate glasses have borate compound particulate. Other soda-lime contaminants include SOx, NOx, CO_2, and possibly hydrocarbons. Secondary controls include scrubbers, bag houses, electrostatic precipitators, and sometimes optimizing operating conditions. Volatilization of lead, fluorine, and other species for specialty glass manufacture must be carefully controlled. All-electric melting and new batching procedures have been helpful in reducing volatilization. Electrostatic

precipitator (EP) dust collected from a stack can be recycled and may, in some cases, partially offset the operating cost of the pollution control device. Powdered coal as a reducing agent controls the decomposition of sodium sulfate more efficiently than increased temperature. Therefore, less sulfate can be used, which results in lower emissions with equivalent glass fining. Higher cullet ratios are also known to reduce emissions. New operating procedures or furnace modifications, such as combustion techniques with higher radiant heat transfer and lower velocities, reduce volatilization.

Summary

The most important melting techniques used within the glass industry are summarized here. The choice of melting technique will depend on many factors, but particularly required capacity, glass formulation, fuel prices, existing infrastructure, and environmental performance. The choice is one of the most important economic and technical decisions made for a new plant or for a furnace rebuild. As a general guide (to which there are inevitably exceptions): for large capacity installations (> 500 tpd), cross-fired regenerative furnaces are almost always employed. For medium capacity installations (100–500 tpd), regenerative end-port furnaces are favored, though cross-fired regenerative, recuperative unit melters and in some cases oxy-fuel or electric melters may also be used according to circumstances. For small capacity installations (25–100 tpd), recuperative unit melters, regenerative end-port furnaces, electric melters, and oxy-fuel melters are generally employed.

The overriding factors are required capacity and glass type. The choice between a regenerative or a recuperative furnace is an economical and technical decision, but current environmental regulations have become significant factors in choosing melting technology. As an example, the choice between conventional air-fuel firing and electrical or oxy-fuel melting is an important decision. Similarly, other specific melting techniques are discussed separately in the substance-specific sectors.

Each of these techniques has inherent advantages, disadvantages, and limitations. For example, at this time, the best technical and most economical way of producing high-volume float glass is with a large cross-fired regenerative furnace. The alternatives are either still not fully accepted in the sector (i.e., oxy-fuel melting) or compromise the economics or technical aspects of the business (i.e., electric melting or recuperative furnaces).

The environmental performance of the furnace is a result of a combination of the choice of melting technique, the method of operation, and the provision of secondary (add-on) abatement measures. From an environmental perspective, melting techniques that are inherently less polluting or that can be controlled by primary means within the process are generally preferred to those that rely on secondary abatement. However, economic and technical practicalities have to be considered, and the final choice should be an optimized balance. The environmental performance of the various melting techniques will differ greatly depending on the glass type being produced, the method of operation, and the design. Electric melting differs from the other techniques described because it is a

fundamental change in heat transfer to the melting process and has very significant effects on emissions.

Chapter 2

Automation and Instrumentation for Glass Manufacturing

Glass manufacturers in the United States have adopted automation and instrumentation into their glassmaking process to a limited extent, but fall short of fully automating the operations for maximum profitability. Glass manufacturers have adopted instrumentation and automation in piecemeal fashion, but have failed to develop and prove comprehensive automations as European glassmakers have done. Application of total automation systems throughout the glass industry would address the strategic initiatives identified by the US Department of Energy-Office of Industrial Technologies in the "Glass Industry Technology Roadmap"— production efficiency, energy efficiency, environmental performance, and innovative uses.

Standard practice in the US glass industry has been to retrofit existing equipment as needed to improve production efficiency rather than revolutionizing the process with automation and instrumentation control systems. In certain segments, glass manufacturing processes have been automated by using one software package or adding one sensor after another, or updating technology as it becomes available. Robotics and statistical process control have been incorporated into the forming process more so than in the melting process, but sensors and advanced instrumentation have yet to be installed system wide. Analog control systems are a thing of the past, as digital systems continue to predominate.

This evolutionary approach to improving glassmaking methods is failing. Full-scale automation from batch to product could maximize profitability by increasing production efficiency and minimizing excessive waste due to miscalculation or human error. Total automation of existing glassmaking systems could help avoid the high risk of experimentation and increase profit margins. Producing glass in a smarter and faster manner with less human involvement has never been more critical to the glassmaking industry, according to automation specialists and experienced glass technologists. Human personnel are needed more in the overlooked area of analyzing data and determining the bogey, or set point, than in routine chores that can be automated.

Automation of a glassmaking facility should begin with the delivery of raw material and be applied to every step of the process through to product delivery. Information systems installed throughout the manufacturing plant would enable a plant operator to detect the onset of system problems so that equipment can be maintained before it delivers inferior products or completely fails, resulting in costly down time.

Controls for glassmaking operations

Instrumentation used throughout the US glass manufacturing process relies heavily on human judgment and experience using manual readings. Normal operations of a furnace are established and maintained by process control in which sensors play an important role, but the furnace operator's need for data to monitor and intervene in the process has become increasingly important as instrumentation has become more advanced. Overall, glassmaking processes in the United States continue to operate with partial instrumentation, partial automation systems, and partial human operator judgment.

Most furnace instrumentation begins with basic sensors to quantify operating parameters. The primary purpose of instrumentation is to establish and maintain process control. Advanced algorithms handle very rapid or very slow response control loops, which would be impossible for an operator to handle adequately. Key furnace operating parameters control basic functions. Controls must be adjusted to maintain relationships between tonnage and temperature schedules. A plant operator manually adjusts production rates, cullet percentages, equipment breakdowns and melting trends. He responds appropriately to short-term

or long-term trends and judges the rate of change for parameters, primarily refractory and glass temperatures. Through experience, a furnace operator knows why a condition changes and how the furnace responds. By comparing actual to expected energy input, the operator determines which compensations are required for the furnace to return to normal operation. See Table 2.1 for Key Performance Indicators (KPI).

Table 2.I. Key Performance Indicators (KPI)

KPI	PARAMETERS						
Energy	Gas Utilization Efficiency	Electric Utilization Efficiency	Compressed Air Utilization Efficiency	Furnace Energy Efficiency	Forming Energy Efficiency	Tons/Day	Energy/Ton
Emissions	NOx	SO_2	HCL	Particulate	CO2	Emissions Cost	Total Emissions
Plant Summary	Conversion Ratio	Reject Efficiency	Maintenance $/Ton	Operating Cost/Ton	$Orders/Ton Produced	Energy/Ton	Emissions/Ton
Plant Costs	Raw Materials	Labor	Energy	Emissions	Capital/Ton	Allocation	

Effective energy management in furnace control influences the economics of operating a glass furnace and the consistency of the glass-product quality. Each furnace and glass type has a quantifiable energy characterization curve that defines operating energy versus pull rates and cullet levels. Once defined in operation after a furnace rebuild, expected and actual fuel inputs, temperatures, and glass quality can be compared to determine how to adjust energy input.

The furnace locations where temperature measurements are of particular interest to operators include:
• Melter, refiner/distributor, regenerator crowns (Thermocouples (TCs) using optical sensors);
• Melter and refiner bottoms in or near glass using temperature controllers (glass bath pyrometers);
• Bridgewall with optical sensors and temperature controllers;
• Gradient profile with portable optical sensors, TCs (crown/bottom), hot spot optical;
• Regenerator with top checker optical sensors (wide-angle view, crown and rider arch TCs;
• Exhaust flues and stack with TCs.

As the level of sophistication increases, long-term data storage, trending analysis and other data become more important for monitoring of and intervention in the process. It has become common practice to rate furnace performance against established standards, such as energy consumption and costs. To control basic functions, which do not normally vary, key furnace operating parameters are followed; other control aspects are changed to maintain relationships between tonnage and temperature schedules. With instrumentation, changes can be addressed in production rates, cullet percentages, equipment breakdowns and melting trends. Comparison of actual to expected energy input could determine which compensations are required to return furnace operation to normal.

European experience

To relate the energy savings and cost savings of process control or automation for melting processes would be difficulty as no accurate values are available on the exact impact of automation for glass melting processes on energy consumption and cots since there are direct (lower energy consumption/ton glass melt) and indirect (lower glass container weights, production efficiency improvement) energy savings.

However, to predict energy savings that might be accrued by the US glass industry, the experience of the European glass industry in the Netherlands provides some indicators. For the whole glass process, five to six percent energy efficiency improvement has been realized for the period (1989-2000) from increased yield,

lower glass weight and combustion control together. The improved automation and control of glass forming machines for the same time period has led to 3 percent energy savings in the container glass industry due to weight reduction of bottles. The improved control of combustion has caused a reduction of 1.5 percent of the energy input of glass furnaces in the same period. The improved control of the production has led to 2 percent increased energy efficiency due to improved production yields. An educated guess on the improved furnace control (control of fuel input, boosting and batch composition) has a potential of 3 percent energy savings compared to currently controlled glass furnace processes. These figures are restricted to the situation in the Netherlands and depend greatly on the starting situation of the process. (Ruud Beerkens, the Netherlands)

Temperature sensors

Furnace temperature sensors provide accurate and reliable measurements from key locations to quantify operating parameters. They determine energy input rates and indicate any need to vary parameters. The thermocouple is the most common and least expensive temperature sensor. In corrosive environments, crown thermocouple blocks should be made of the same material as the crown, or replaced with breast wall thermocouples in extreme environments.

Optical sensors for non-contact temperature measurements, such as thermopiles and infrared detectors, rely on a focused lens and filtering system to measure emitting radiation of the molten glass material. A detecting element converts the radiation into a calibrated electrical signal. These expensive sensors rely for accuracy on a fixed line of sight between the sensor and the target material. The detectors may require protection by purging or air-cooling. They are sensitive to ambient temperature and must be cooled with air or water. Sensors with fiber optics convey the optical signal from the sighting lens to a remote detector. Portable optical pyrometers are used to compare accuracy of *in-situ* temperature measuring devices and measure intermittent targets throughout the furnace.

Furnace combustion process

Melter temperature is controlled primarily by the combustion process. With instrumentation, fuel flow and combustion air are measured to compensate for temperature and pressure (mass flow corrections). Profiles of specific temperatures are obtained by establishing fuel distribution between burner positions. These combustion-process flow measurements typically include:

- Natural gas flow with orifice, turbine meter or integrated Pitot tube, correcting for temperature and pressure mass flow;
- Propane/air with orifice, turbine meter, correction for specific gravity, temperature and pressure mass;
- Combustion air flow with orifice or venture meter, correcting for temperature and pressure mass flow;
- Oil flow with capacity-meter correction for temperature and differential pressure across filters;
- Oil atomization (air) with pressure at burner;
- Oil atomization (mechanical) with oil pressure at burner.

Parameter measurements

To determine energy input, a furnace operator can use a number of parameters. Hour to hour, the bridge wall optical and crown thermocouple readings may indicate temperature trends that require gas input changes. Shift to shift, changes in electric boost or superstructure temperature targets are determined by trends in the batch line, glass quality, or melter bottom temperatures. Day to day, actual energy parameters can be compared with expected values. Any deviations can require checks on actual pull rate calculations; incorrect combustion ratios; optical pyrometer or thermocouple calibrations; batch/cullet redox control; or operator performance. Furnace parameter set points are adjusted by the furnace operator.

Thermal momentum
Thermal momentum is one of the most difficult aspects of furnace operation. The total mass of molten glass and hot refractories contributes energy to the melting process. This energy must be replenished by heat from flame combustion and electric boosting sources. When tonnage changes, the equilibrium of the melt must be re-established. For even modest pull rate changes (5 to 10 percent), these phenomena can occur over a number of days. Actual versus expected energy input and stabilization of the glass bath temperature during transition is understood by viewing operating conditions over a previous period of days. Instrumentation using data storage and graphic presentation techniques helps the furnace operator better understand the condition of the melter.

Product measurement
Seed count usually triggers the first concern in melting of flat, container and textile fiberglass. Batch or refractory stone counts, which are reported as production loss percentage, or defects per 100 lb. of glass, require investigation of the melting operation. Taken on a shift basis, specific tests or observations provide feedback for controlling the melting parameters in the production area to measure quality of the final glass product.

Thermal heat transfer
To begin thermal heat transfer in the melt, the combustion process generates a flame from which radiation is directed to the melting batch and molten glass bath. Re-radiation from the refractory structure into the melting system is acceptable if refractory service limits are not exceeded. Convection heat transfer by physical contact with batch or molten glass can be effective, but higher gas product velocities lead to entrainment of fine batch ingredients to the exhaust gases, which can cause refractory deterioration and air pollution. To establish a low-velocity, high-luminosity flame away from the refractory structure but in proximity to the melting process, furnace design must be integrated with operation procedure. Location of the flame envelope controls heat transfer to the melting batch, provides the required thermal profile by locating along the tank side wall and provides the heat necessary to refine the freshly formed glass.

Most operations rely on temperature profiles obtained by sensors within the furnace at the crown, in the glass batch, through the bottom or sidewall flux or by surface readings with portable optical pyrometers of the melter superstructure. These reference readings help to establish control parameters for consistent melting and refining results, i.e., final glass quality.

Furnace hot spot
To establish and maintain a hot spot during furnace operation, most glass manufacturers universally accept the system of furnace temperature gradient (or profile). In this system, hotter glass expands and rises to a higher physical position in the melt and flows on the surface toward colder areas at lower elevations. The batch piles are contained behind the hot spot, preventing partially melted glass from leaving the melting zone by this surface flow. The furnace operator reads the temperatures along the length of the melter in the tuck stones or breast wall blocks immediately after the firing is interrupted for a reversal. During fire offs of a regenerative furnace, as temperature drops rapidly, the precise time and window of time allowed for thermal averaging must be replicated precisely on each side for each reversal.

Electric boosting
With electric boosting systems, the furnace can provide energy directly to the molten glass batch, and the evolution of gases, principally carbon dioxide from lime and soda ash, enhances heat transfer through the batch and accelerates melting. Use of electric boost or bubblers increase both thermal and compositional homogenization.

In practice, electric boosters, with or without bubblers, introduce heat to hard to reach locations in the furnace bath and essentially force more of the furnace to participate in the melting process by increasing the average dwell time and providing a more uniform temperature profile from top to bottom. Bubbling, by itself forces mixing and temperature averaging from top to bottom. To anticipate changing melting requirements, rate changes must be made. Electric boost can be considered the variable with greatest effect in paralleling fill rate changes. It is the most costly energy input so should be used to fill in where additional heat input is required as a result of increased fill, or the first energy source to be reduced when fill is reduced.

Furnace

The furnace, typically the greatest single energy-consuming device in the facility, is a major area in which to consider automation. Melting energy per ton is relevant to the size and pull rate of the furnace. Daily energy consumption involves converting fossil fuel and electric boost, if used, to equivalent energy units, typically mmBtu. To convert electric boost to equivalent fossil Btu, for less than 25 percent of the total energy input, a conversion factor is applied:

weighted mmBtu/day=fossil fuel X fossil unit + boost kwh X 0.007 mmBtu/kwh.

A plot of total equivalent energy versus furnace pull establishes an energy characterization curve, which represents both a distinctive furnace and its typical operational characteristics. The energy of most furnaces can be reduced to a linear relationship (Y=mx+b) by regression analysis. The intercept (b) is defined as the predicted total energy to maintain glass bath temperatures when the furnace is full of glass without pull, taps or fill, a function of the furnace design and condition. The slope (m), a function of percentage of cullet, batch composition, pull rate and furnace thermal profile, represents the incremental energy required for an incremental increase in pull, typically in mmBtu/ton. The scatter in the data can reflect the consistency of the furnace operation, or pull rate. The lower cost energy sources, i.e., natural gas or oil, should be fixed and higher cost electricity considered as the variable energy source.

Instrumentation for electric boosting helps control energy input, as well as indicating operating conditions relevant to system maintenance and safety. Measurements key to electric boosting function include:

- System electric boost/individual phases—volts, amps, kilowatts, conductivity;
- Electrodes—phase volts, amps, volts to ground, holder temperature;
- Safety-system ground fault and ground amps, direct current, transformer temperature.

Bubbler systems

Manually adjusted bubblers usually cannot be read by recording devices. Most bubbler systems use compressed air; a few use oxygen or sulfur dioxide. Back-up bottled gases connected with automatic switchover with check valves or solenoids protect against plugging during power failures. Monitoring systems include bubblers with supply and regulated air or oxygen pressure; SCFH fluid flow; and count/minute (manual). Oxygen is a reactive gas and can be chemically dissolved in the melt when temperature is lowered as the glass moves towards delivery. Therefore, for many melting processes, operators prefer oxygen bubbling to relatively inert air, which can leave behind residual nitrogen. The concern is that the tail of the bubble will break into tiny seeds that remain in the glass as defects.

Glass level

For production and melting stability, the glass level is typically measured in the refiner/distributor, or the rear zone of forehearths. This reading must be accurate and reliable. Elevation of the glass is referenced

relative to a defined zero with precision to the nearest one-hundredth inch, or the nearest one-thousandth of an inch on a new system of larger furnaces.
The measurement system used is determined by the type of glass being melted and atmospheric conditions above the melt.

- Probe type (physical contact with glass surface to measure elevation or noncontact using back pressure sensor with low-pressure air flow);
- Laser type (reflecting laser beam across span to calibrated detector);
- Bubble generator (immersed tube to determine the pressure required to cause bubble release);
- Nuclear (beta radiation measurement with glass varying absorption between source and detector).

Furnace pressure
Furnace pressure and differential pressure relative to atmosphere are measured by piping from taps in the glass melter's superstructure to pressure transmitters measure. Results are reported as positive or negative inches of water column, with precision to the nearest 0.0005 inch and a typical reading of about +0.070 inches of water column. Position of the pressure tap is important because the chimney effect of the hot furnace atmosphere is relative to the outside ambient atmosphere. Pressure increases 0.01 inch for every one-foot increase in tap elevation. For a large 1000 sq.ft. melt surface furnace, the pressure probe would be mounted about six feet above the melt surface, which would read from 0.065 to 0.070 inches of water column. Ideal melter pressure is the lowest pressure that prevents outside air (parasitic air) from entering the furnace at glass-melt surface.

Oxygen measurement
Oxygen, an important variable in monitoring the combustion and melting process, is measured by a probe mounted in the hot exhaust stream. Located under positive pressure leaving the melter, the probe determines percentage and temperature of excess oxygen. Fresh reference air supplied to the internal reference side of a zirconia oxygen sensor will prevent depletion of oxygen from the interior, reference side of the sensor. If reference is less than 21 percent oxygen, the sensor output will indicate higher excess oxygen than actual. The furnace is at a lower-oxygen, partial pressure as compared to the reference, so the oxygen molecules pick up electrons and transfer them through the electrolyte to the furnace to satisfy the oxygen imbalance. As oxygen is depleted inside the sensor, voltage drops and provides a higher oxygen reading in the furnace than is actual or accurate.

Oxygen depletion is common to values of 18 percent or lower. This oxygen depletion can cause errors of two-plus percent excess oxygen, compared to the expected reference of 20.95 percent used in calculating of excess oxygen. If furnace combustion air or oxygen is lowered, the readout will indicate the targeted value but will drive the furnace into reducing conditions. By supplying 250 cc/min., or 0.5 CFH reference air, more than enough oxygen will be present to overcome the flow of oxygen ions through the electrolyte and cause error.

Batch moisture
For proper furnace operation, batch moisture must be controlled accurately. Batch samples are routinely measured by an operator or technician. A 100-gram sample, excluding cullet, is dried at ~250°F and the weight reported as percentage moisture. To maintain the typical 3 to 4 percent moisture level, adjustments are made by flow control valves, scales, proportioning pumps or rotometers. Totalizing flow meters are often used to calculate gallons per batch or ton. Batch moisture is checked by its appearance at the charger and adjusted if necessary.

Data control
Data logging is required for a permanent record of operating parameters and trends. Some instrumentation provides analog or digital readouts, but no hard copy. To integrate the readings from furnace operation with other aspects of operation, data are recorded manually on a log sheet on an hourly basis. Portable optical temperatures, excess oxygen readings, routine inspections and process changes are manually recorded on another log. Measured data for most key functions of the furnace are recorded on circular or strip charts, which are easier to read daily and require less operator attention to change paper for strip charts, so the operator checks the measurements less frequently. If a system is computerized, shift and daily summary reports are printed out for periodic review of key parameters. Statistical trending calculations for process control functions are obtained from newer graphic systems.

Manual checklists and alarm systems indicate status of the furnace-supporting utility for various items: blowers and fans (combustion air stack draft, sidewall and throat cooling; compressed air pressure; cooling water temperature and pressure; cooling air temperature and pressure.

To control refiner-distributor temperature, a reliable reference temperature of the glass is needed. The glass temperature is lowered to a target temperature for exiting into forehearths or other processing devices by controlling heating and cooling equipment devices. Best results are usually obtained by monitoring the actual exit glass temperature with an immersion thermocouple and cascading back to the distributor's set point. This measurement can vary from tonnage changes or impact of melter variables on throat temperature.

Manual readings
Manual readings are obtained with portable analyzers that pump a collected sample through probes inserted into the atmosphere. These devices rely on measuring paramagnetic principles or oxygen cell references. Accuracy is checked by measuring known mixtures of calibration gases. Some devices can detect carbon monoxide to indicate combustibles.

Regenerative furnace operation is controlled by the reversal system, which mechanically closes and opens fuel valves and moves dampers to reverse flow of combustion air and exhaust gases. Purge timers delay valve movements. A manual furnace operator must be aware of reversal schedules when obtaining portable optical pyrometer readings while firing is off. Reversals should be analyzed and adjusted to arrive at minimum time of fire offs. Spent fuel should be purged from the exhaust chamber before fresh air becomes available for fuel ignition.

Stack and flue conditions
Stack and flue conditions that indicate combustion and firing changes can be monitored by the graphic pattern of the temperature cycles of thermocouples. Effects from reversal failures can be compensated for, and stack valve opening can be controlled for furnace pressure when these data are available.

Advanced Process Control technology
Advanced Process Control has proven to be an excellent methodology to assist plants in achieving goals as defined in the Glass Industry Vision Statement. To make these applications more cost effective, more availability and increased industry usage are needed.

Advanced Process Control (APC) is available for installation in a number of forms to reduce energy consumption, increase production, optimize furnace operation, reduce product change over time and maintenance costs, as well as other aspects of the glassmaking process. Total automated systems for

glassmaking have proven to be more cost effective, less energy consuming, and less emissions producing when applied by European glass manufacturers. With the integrated automation systems, the human furnace operator is more equipped to analyze data and make step changes in the furnace operation, rather than engage in mindless jobs that are time consuming and inefficient.

Automation systems for glassmaking

Why automation? Major concerns in glass melting today are saving energy, extending life of a furnace, lowering crown temperature, and reducing NOx emissions, total automated systems can be applied to enhance existing furnaces rather than redesign the traditional regenerative furnace. Technical automation specialists recommend this evolutionary approach to improving the glass melting process. With glass manufacturers pressured for higher production speeds, tighter integration of machinery, safer production environments, and capital investment pressures, the glass industry would be well served to explore the concept of totally automating the manufacturing process. Based on digital rather than analog software and hardware, automated systems could be acquired in a lease/rental equipment and instrument program to eliminate concerns over outdated or incompatible equipment and avoid the need for operator retraining as technology develops.

In automated glass manufacturing facilities, Manufacturing Execution System (MES) applications at the plant control level link the manufacturing floor to the enterprise or plant management staff so the big picture of trends and movements in the production can be seen on a real time basis. With up-to-date data, personnel can respond quickly to conditions that affect the production process, thereby leading to effective manufacturing and avoiding costly down time. Because the integrated automated system is applied to existing production systems rather than installed, the risks to capital investment are not an issue.

Maintenance of a glass facility can be simplified to save time and money. With systems management, an operator can determine where failure starts to occur and avoid actual failure with predictive maintenance. Sensor devices can pinpoint the onset of equipment failure before catastrophic failure occurs, causing costly downtime. With a totally integrated system, the same controllers are used throughout the operations, reducing training required for service personnel and reducing the size of spare parts inventory.

To install an automated system in a US glass manufacturing facility, some basic requirements must first be met. Improved sensors for glass melting are needed; digital power controllers must replace analog types; operators must be educated and trained in the automated technology. The foundation for a complete, tightly integrated automation system is threefold.

1. All software tools share the same integrated database, reducing time-consuming, redundant data entry tasks and eliminating errors caused by incorrect data entry. Symbolic references, created in one place, are defined by a configuration tool, a program editor or a screen designer. Several people can work simultaneously on one program with consistent data maintained.
2. Information flow is optimized by creating a highly transparent manufacturing facility. All hardware and software components speak the same language, making it easy to configure data flow across different physical networks. An operator can change from one physical network to another without modifying the user program and without additional engineering overhead. The communications system can be based on international recognized standards like AS-I, PROFIBUS, Ethernet, PROFlnet and TCP/IP from field level to corporate management level. Built-in Internet technologies can support global information flow with email and World Wide Web.
3. A common integrated engineering system can reduce programming overhead. Engineering tools from diagnostics to configuration can be integrated within a project manager. Software and hardware can be configured as modules, simplifying complex technologies.

If a glassmaking facility is engineered for an integrated development environment, the operator interfaces, controllers, I/Os, drives, and communications are configured and programmed as one comprehensive system. This allows for a more intuitive and clearer overview of the whole glassmaking process and standardizes the engineering and facility configuration. When a system is tightly integrated, it can be designed, configured, programmed and tested to allow faster delivery of products.

A push button plant operates automatically within limits established by knowledgeable process engineers, who constantly require better target set points of a multiple set point control process. Technology is available for model multiple set point changes that can be used until a strategy for process change is selected with statistically predicted performance. This new set of process set points adjust for an aging furnace, outside temperature or humidity changes. Changes in pull to accommodate job changes and cullet changes are well within today's control technology capability.

Batch delivery systems can be computerized to prevent deposit of raw materials in the wrong silos and to assure on-time delivery of materials as needed.

An integrated automated system for glass melting obtains a continuous flow of information across the entire operation of the plant from raw materials delivery to final glass product shipment. All business administration within a company is handled through these systems: finances, order processing, production, logistics.

Specific devices

• DeNOx technology is based on an increase of energy transfer from the flames to the batch and glass directly, which results in a 50°C drop in exhaust temperature and a corresponding lowering of crown and flame temperature. Developed by STG GmbH Cottbus, this technology has been designed to save energy required to heat glass tank furnaces and reduce NOx emissions by 50 to 70 percent, down to 350-800 NOx/m^3 of air, compared to 0°C and 8 percent excess oxygen. An energy savings of 5-plus percent is accompanied by increased melting capacity. Reduction of energy consumption and increased glass pull pays for NOx emission reduction and provides a return of investment of less than a year. This intensified direct energy transfer results from the design of oil and gas burners for improved heat exchange.

Any parasite air infiltration is minimized and compensated for, providing precisely controlled low-excess air at the flame, thus extending furnace life and lowering capital cost. This assumes that the flux blocks and tuck stones are protected against block cooling fan air that enters the furnace, as well as sealed sidewall burner blocks.

• Optical Melting Control (OMC) provides better control for real melting conditions, optimizing these effects and avoiding risk from increased heat transfer to glass and batch. OMC is based on computer processing of information related to open glass surfaces, batch cover and hot spot conditions, as well as standards for stable glass quality. Optical Melting Control, or imaging devices, optimizes glass melting within a furnace, reducing energy consumption. Capital cost is relatively low, and life of the furnace is extended.

• Machine Cooling Automation. The use of this technology on the IS machine optimizes operation for container glass. Production is increased, product quality is stable, and capital cost is relatively low.

• Viscosity Automation manages and sustains viscosity in container glass production. Production is increased, product quality is stable and capital cost is relatively low.

• Fuzzy Control Automation solutions could optimize forehearth zone temperature controls for better zone temperature-stability, which leads to increased productivity and quality as well as reduced production costs.

• Multivariable Predictive Control for melting and feeder profile increases throughput and reduces product changeover times for relatively low capital costs.

• Maintenance Management involves real time monitoring of process efficiency and product quality, and extends equipment life, reducing maintenance costs and spare parts inventories.

• Model Predictive Control is a model-based control replacement for multiple glass applications (forehearth, product quality, furnace melt, melt level) and is low cost, requires reduced energy, improves quality and reduces emissions.

Among the companies that provide Advanced Control Applications systems are Brainwave/University Dynamics Technologies, Glass Service, Siemens (STG, IPCOS) and TNO.

A Model System:
Advanced Control of Glass Melting and Conditional Processes

Today almost 80 percent of melting furnaces in the world are estimated to be operating either on manual control or by single PID temperature control. Due to response time of the production system and the complexity of simultaneous chemical and physical processes, it is very difficult for a human operator to optimally control such melting furnace systems.

The most important objectives for such control are furnace stability, consistency of control strategy, fuel firing profiles, temperature profile stability, fuel caloric value compensation, glass level stability, emissions, forehearth temperature, homogeneity and other important process parameters.

One advanced control system available uses expert rules control, model based predictive control and fuzzy control to harmonize and optimize the complex system of furnace operations, including the batch charger, melter, refiner and working end, and forehearths. [1]

Model Predictive Control
Model Predictive Control (MPC) is one of the advanced control techniques that has been proven very effective for glass melting furnace control. The optimal control solutions are computed inclusive of the entire operational strategies, which are complex by their very nature. These solutions consider all measurable relationships between process inputs like heating, cooling, fuel, flows, pressure values, etc., and process outputs represented by thermocouples and by other sensors, such as Multi Input Multi Output (MIMO). The MIMO, together with process prediction for future occurrences, makes the MPC technique a very precise and powerful computational tool. Based on the derived mathematical process model and the expected future process behavior, an optimization model is built and solved by several methods in accord with operator requests. [2]

Advanced Furnace Control
One example of MPC approach for a typical float furnace uses manipulated variables, such as gas, electric power, and dilution air control to better control the target melter temperature. The next important controlled parameter for a float furnace is the canal temperature, or the area where the melted glass flows into the tin bath. The prediction and feed forward information that comes from the refiner and working end can help to keep the forming process temperatures more precisely on the target values.

To ensure optimum combustion conditions, the Expert System can read online excess oxygen information in the regenerator chambers to set and keep the right gas/combustion air ratio and minimize the level of NOx.

Another basic level control area is a batch charging block. This system uses the common relation between the batch charger speed and the glass level.

An overview process control is focused on the process quality parameters. Based on a defined relationship and information (e.g. from batch pattern image analyzer or a redox sensor) the system modifies the target setting for the "Temperature—Heat Supply" block.

Advanced Forehearth Control

Forehearth control often focuses on the temperature stability and homogeneity of the glass before the spout. To reach a good thermal gradient in the forehearth, (from working end to the desired spout temperature), each zone has a thermocouple (sometimes triplex level) and could be heated or cooled separately. Usually standard Proportional-Integral Derivative (PID) controllers are capable of keeping the temperature stable but have difficulties with temperature changes. Zone Temperature changes (change of the temperature gradient profile) often require a long transition time to be stable again, which also causes viscosity changes in the glass at the spout. With these viscosity fluctuations, the gob weight is no longer stable and the productivity of the IS Machine goes down in the transition time. Advances Process control leveraging Fuzzy Logic Control (FLC) or MPC enhances the temperature stability and shortens temperature transition times (e.g. new temperature profile).

Fuzzy Logic Control

The MPC control system can be used in many cases, even if the process model is not accurate. However, in some glass production requirements where models between the inputs and outputs of the control system are not reliable, the MPC control technique cannot be applied. In most of these cases, manual operation patterns are available to control the process (operator know-how). A Fuzzy Logic Controller (FLC) tool allows transfer of operator know-how into the rule basis of the FLC.

Therefore, a Fuzzy Logic Controller works like a typical rules-based expert system. A fuzzy logic approach allows better definition of control actions more effectively and, therefore, corresponds to the human operator requirements. Moreover, the use of fuzzy sets of logic and other resources from fuzzy theory allow operators to quantify the qualitative criteria for optimal glass production control.

The collection of fuzzy rules covers all possible situations that can occur during the glass production process. At each moment of on-line control, all of the rules are evaluated, and the control action best fitting the rule is subsequently applied. By comparison to the MPC control system, the main FLC disadvantage is the absence of the process behavior prediction.

Neural Networks (NNs)

Neural networks are another technique that can be applied in advanced control systems. Neural networks use pattern recognition techniques to cluster the process conditions and the final product results together. This method helps to find and keep the optimum process settings according to the desired product quality.

Typical use of advanced control techniques for glass production

- Cross fired melter (MPC)
- End fired melter (MPC)

• Oxygen furnace (MPC)
• Refiner, Working End (MPC)
• Forehearth (FLC & MPC)
• Evaluation of glass product quality (NNs)

[1] Advanced control system for glass furnace control and optimzation ESII ™ of Glass Service Inc., www.gsl.cz.
[2] Muller, J., J. Chmelar, R. Bodi, E. Muysenberg, "Aspects of Glass Production Optimal Control," VII International Seminar on Mathematical Modeling and Advanced Numerical Methods in furnace Design and Operation (2003). (*Contributed by Josef Chmelar, Glass Service; Peter Krause, Siemens)*

Chapter 3

Developments in Glass Melting Technology

Research projects with potential to meet the need for a new glassmaking process
Have been launched due to the efforts of the US DOE-Office of Industrial Technologies and the Glass Manufacturing Industry Council. Initial developments on these projects are reported here for further study:

- Submerged Combustion Melting
  (Next Generation Melting System)
  Gas Technology Institute (David Rue)
  with A.C. Leadbetter and Son Inc., Fluent Inc., Praxair Inc
  NYSERDA
  DE-FC36-03G013092 USDOE

- High-Intensity Plasma Glass Melter
  Plasmelt Glass Technologies, LCC
  Ron Gonterman and Michael Weinstein with James K. Hayward, InnovaTech Services Inc., N.Sight Partners LLC, Laboratory of Glass Properties LCC, Tooley Design Services, Advanced Glassfiber Yarns, Johns Manville

- Oxy-Fuel Fired Front End
  Owens Corning (Steve Mighton)
  With Osram-Sylvania, Inc., BOC, Combustion Tec/Eclipse

- Segmented Melting System
  Ruud Beerkens, TNO, the Netherlands

3.A. Submerged Combustion Melting

Next Generation Melting System (NGMS)

The Project

Energy-Efficient Glass MeltingThe Next Generation Melter System
(Report for 4th quarter 2003)

Gas Technology Institute
with A.C. Leadbetter and Son Inc., Fluent Inc., Praxair Inc
and NYSERDA
USDOE award (DE-FC36-03GO13092)

Objective

The objective of this project is to demonstrate a high intensity glass melter, based on the submerged combustion melting technology. This melter will serve as the melting and homogenization section of a segmented, lower-capital cost, energy-efficient Next Generation Glass Melting System (NGMS). After this project, the melter will be ready to move toward commercial trials for some glasses needing little refining (fiberglass, etc.). For other glasses, a second project Phase or glass industry research is anticipated to develop the fining stage of the NGMS process. Overall goals of this project are:

- Design and fabrication of a 1 ton/h pilot-scale submerged combustion glass melter,
- Extensive melting of container, fiber, flat, and specialty glass formulations,
- Detailed analysis of the product glasses,
- Preparation of a Fluent-supported CFD model of the melter to be used in parallel with further development of the NGMS technology,
- Physical modeling of the NGMS process to determine energy savings, cost savings, environmental improvements, and use of waste heat for production of needed oxygen,
- Development of a commercialization plan and timeline for further, needed components and integration of the NGMS technology.

The project team recognizes that further work will be needed after this project to bring the critically-needed NGMS into industrial use. To expedite that development, the work in this project is focusing in three areas needed to demonstrate the melting and homogenization steps of the NGMS technology and to prepare for further work to commercialize NGMS. These work areas are:

- Design, fabrication, and operation of a pilot-scale melter with analysis of product glass,
- Supported Computational Fluid Dynamics (CFD) modeling on the melter that is available to all users,
- Physical modeling and energy balances for the full NGMS with specific planning for further steps leading to commercial implementation.

Work in each project year is divided into tasks with milestones at the end of many of the Tasks. The integrated Task Schedule enables project team members to assign labor appropriately and to follow a critical path to reach all milestones and objectives toward

the overall goal of design, modeling, demonstration, and analysis of this melting technology.

Task		Year 1				Year 2				Year 3			
		Q1	Q2	Q3	Q4	Q1	Q2	Q3	Q4	Q1	Q2	Q3	Q4
1	Modeling												
2	Melter Design												
3	Procurment												
4	Physical Modeling												
5	Fabrication												
6	Shakedown												
7	Test Planning												
8	Testing - Parametric												
9	Melter Modification												
10	Second Test Series												
11	Analysis												
12	Toward Commercialization												

Milestones are placed at the end of many project tasks to help sponsors and team members evaluate project technical progress on time and financial tracking. The milestones shown below will serve throughout the project as a gauge to successful completion of the work.

Year 1 Milestones	• Complete CFD model to be used by team members to design pilot scale melter • Design pilot scale melter • Procure all equipment and components for the melter in preparation for fabrication
Year 2 Milestones	• Fabricate and shake down of the pilot scale melter • Prepare test plan including compositions of glasses to be melted • Finish all pilot scale melting tests and collect samples for analysis • Complete detailed analyses of product glass properties and quality
Year 3 Milestones	• Modify melter, as needed, for second test series • Finish second test series, including at least one long term test, and all glass analysis • Finalize CFD model of the melter usable by all CFD operators • Finish physical material and energy balance model of next generation melting system (NGMS) process including utilizing waste heat for oxygen production • Complete plan for commercialization, including needed developments and stages

Go-no-go decision points are placed at the end of the first and second years of the project. At these times, the project team and sponsors have the opportunity to assess project progress and decide on continued work in the next phase (or year) of the project. The project team has every confidence that all project technical targets and milestones will be reached.

- The Year 1 go-no-go decision point criteria for continuing work will be design of the pilot scale melter and procurement of equipment and components on schedule and budget.
- The Year 2 decision point criteria for continuing work will be completion of pilot scale testing with glass formulations from all four industry segments and analyses of the product glasses.

Background

Any new melter must perform at least as well as refractory melt tanks by all technical, cost, operability, and environmental criteria while providing tangible benefits to the glass maker. A partial list of this daunting set of criteria, by category is shown below.

Criteria Category	Specific Criteria
Technical	High thermal efficiency, ability to make any glass formulation, can handle needed temperatures and oxidation conditions, meet glass quality requirements, integrates with batch handling and forming processes
Cost	Low melter cost, low maintenance cost, low energy cost, inexpensive environmental regulation compliance
Operability	Scalable from 25 to 700 ton/day, reliable, stable operation, easy to idle, ability to start and stop, ease of access and repair, fast change with glass formulation and color, no moving parts to be abraded by the glass
Environmental	Low air, water, and solid waste, recycle-friendly

The search for a lower-cost glass melter has led technologists to suggest a segmented melting approach in which several stages are used to optimize the melting, homogenization, and refining (bubble removal) instead of the current practice of using a single, large tank melter. In this segmented approach, separately optimized stages for high-intensity melting and rapid refining are expected to reduce total residence time by 80 percent or more. This approach to melting has come to be known as the Next Generation Melting System (NGMS).

The project team has identified submerged combustion melting (SCM) as the ideal melting and homogenization stage of NGMS. This is the only melting approach that meets and exceeds all the performance characteristics of refractory tanks and also provides large capital and energy savings to the glass industry. Submerged combustion melting is a process for producing mineral melts in which fuel and oxidant are fired directly into the bath of material being melted. The combustion gases bubble through the bath, creating a high heat transfer rate to the bath material and turbulent mixing. Melted material with a uniform product composition is drained from a tap near the bottom of the bath. Batch handling systems can be simple and inexpensive because the melter is tolerant of a wide range in batch and cullet size, can accept multiple feeds, and does not require perfect feed blending.

SCM was developed by the Gas Institute (GI) of the National Academy of Sciences of Ukraine and was commercialized a decade ago for mineral wool production in Ukraine and Belarus. Five 75 ton/day melters are in operation. These commercial melters use recuperators to preheat combustion air to 575°F. All melters operate with less than 10 percent excess air and produce NO_x emissions of less than 100 vppm (at 0 percent O_2) along with very low CO emissions.

In SCM (shown below), fuel and oxidant are fired directly into the molten bath from burners attached to the bottom of the melt chamber. High-temperature bubbling combustion inside the melt creates complex gas-liquid interaction and a large heat transfer surface. This significantly intensifies heat exchange between combustion products and processed material while lowering the average combustion temperature. Intense mixing increases the speed of melting, promotes reactant contact and chemical reaction rates, and improves the homogeneity of the glass melt product. The melter can handle a relatively non-homogeneous batch material. The size, physical structure, and especially homogeneity of the batch do not require strict control. Batch components can be charged premixed or separately, continuously or in portions.

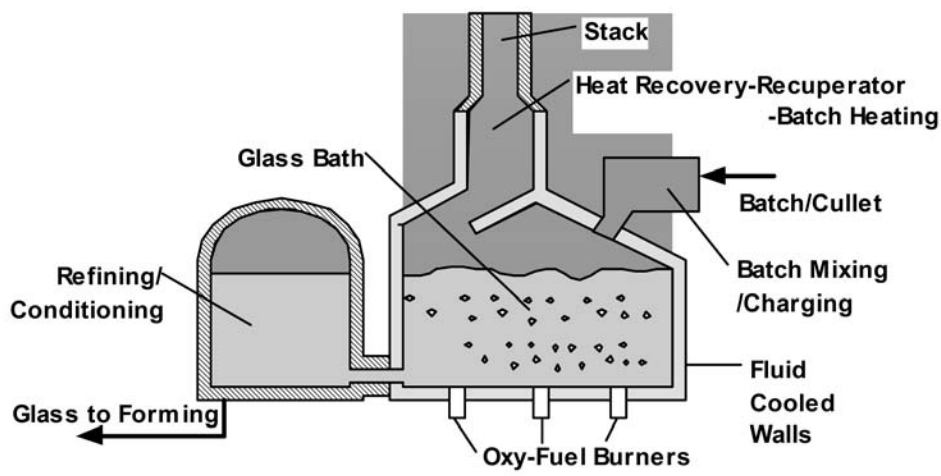

Figure 3.A.1. Submerged Combustion Melter schematic.

A critical condition for SCM operation is stable, controlled combustion of the fuel within the melt. Simply supplying a combustible fuel-oxidant mixture into the melt at a temperature significantly exceeding the fuel's ignition temperature is insufficient to create stable combustion. Numerous experiments conducted on different submerged combustion furnaces with different melts have confirmed this. Cold channels are formed that lead to unstable combustion and excessive melt fluidization. A physical model for the ignition of a combustible mixture within a melt as well as its mathematical description show that for the majority of melt conditions that may occur in practice, the ignition of a combustible mixture injected into the melt as a stream starts at a significant distance from the injection point. This, in turn, leads to the formation of cold channels of frozen melt, and unstable combustion. To avoid this type of combustion, the system must be designed to minimize the ignition distance. This can be achieved in three ways: 1) by flame stabilization at the point of injection using special stabilizing devices, 2) by

splitting the fuel-oxidant mixture into smaller jets, and/or 3) by preheating the fuel/oxidant mixture.

Several types of multiple-nozzle air-gas burners that meet these requirements have been designed and operated industrially by the GI Ukraine. The burner is attached to the bottom of the bath with the main body outside the furnace. Only the surface around the exhaust of the slotted combustion chamber is in contact with the melt. Based on the research data available on thermal and fluid dynamic stability of the combustion chamber, a model for calculating the design parameters of submerged burners has been developed. GTI has extended this work to oxy-gas burners and found them to be stable during lab-scale melting of several materials including mineral wool, sodium silicate, and cement kiln dust.

Material in the SCM melt chamber constantly moves against the walls. A typical refractory surface would rapidly be worn away by the action of the melt. To address this, the melting tank is constructed of fluid-cooled walls that are protected by a layer of frozen melt during operation. This frozen layer is constantly formed and worn away during operation. The industrial SCM units used water-cooled walls. The project team intends to use high temperature fluids for cooling to allow useful heat to be recovered from this coolant. The heat flux through the frozen melt layer is determined by the properties of the processed material and the temperature and turbulence of the melt. It is, therefore, undesirable to superheat the melt because this increases the heat flux through the walls. Also, heat flux is lower with oxy-gas firing because melt turbulence is greatly reduced. Under normal operating conditions for silica melts, the oxy-gas heat flux is 7700 Btu/ft^2·h, equal to 2 x 10^6 Btu/h heat loss for a 75 ton/day melter. These values are relatively independent of the temperature of the coolant as any increase or decrease in the coolant temperature is accompanied by a compensating change in the thickness of the lining. Heat flux for a refractory tank is lower at 1800 Btu/ft^2·h, but with much greater surface area, the refractory tank loses more heat (2.55 x 10^6 Btu/h).

Special care must be taken to minimize fluidization of the melt that creates a large amount of droplets. These droplets, especially small ones that are formed when bubbles split, can be thrown out of the melt to a significant height. Consequently, the exhaust ducting must be protected from being covered by the frozen melt. In our design, this issue is resolved by removing combustion products through a special separation zone. In the separation zone, exhaust gas is forced to change direction and drop all liquid carryover droplets. The roof of this zone is sloped so droplets can easily be returned to the melter. This approach also reduces the necessary fluid-cooled surface area around the melting zone.

GTI holds the exclusive, world-wide license to SCM outside the former Soviet Union. Recognizing SCM's potential, GTI has operated a laboratory-scale melter with oxy-gas burners and produced several melts. Evaluation of the process has shown its potential for glass production when combined with other technologies for heat recovery, batch handling, refining, and process control.

Waste heat recovery is critical to reach high-energy savings with NGMS. Adaptation of Praxair's Oxygen Transport Membrane (OTM) technology to the melter will be evaluated in this project. Praxair has been the world leader in the development of oxygen transport

membrane (OTM) technology. The OTM technology is based on a class of ceramic materials that, when operated at temperatures above 500ºC, can separate oxygen from air with infinite selectivity. Because of the high temperature of operation, opportunities exist for integrating OTM oxygen production with the glass melting process to utilize waste heat. This integration is expected to result in increased energy efficiencies, reduced oxygen costs and emissions, and potential carbon dioxide sequestration.

Praxair's efforts will focus on developing and simulating OTM processes that would be ideally suited for glass melting furnaces. A multitude of process configurations will be designed. Of these processes, the top two or three configurations will be selected based on process efficiency, emission levels, simplicity, and level of integration. A preliminary economic analysis then will be performed on the selected process cycles.

The Glass Industry Technology Roadmap cites the need for a less capital intensive, lower energy cost, and cleaner way to melt glass. Incremental changes to current melting practices will not stop the loss of furnaces, jobs, and companies to the competition from alternative materials and international glass makers. The Roadmap sets high strategic goals of 20 percent cost reduction, six sigma quality, 50 percent decrease in the gap between actual and theoretical energy use, and 20 percent decrease in air emissions. At the same time, the Energy Efficiency technical area calls for "New Glass melting technologies." This project addresses the following Needs expressed in the Roadmap:

- Accurate validated melter model (Energy Efficiency) – developed and supported by Fluent
- Improved thermal efficiency (Energy Efficiency) – the gap between actual and theoretical energy use is decreased by 50 percent
- Superior refractory materials (Energy Efficiency) – over 80 percent of refractory is eliminated because refractory walls are replaced with fluid-cooled walls with heat recovery
- Lower production cost (Production Efficiency) – melter cost at 55 percent lower, energy cost 23 percent lower, and glass production cost (capital, labor, and energy) 25 percent lower
- Decrease air emissions (Environmental Performance) – 20 to 25 percent decrease in air emissions from higher efficiency while NOx is reduced over 50 percent (to under 0.35 lb/ton)

This project will demonstrate that the submerged combustion melter is ideally suited for technical and cost reasons, and better suited than any other melting approach, to be the melting and homogenization stage of an NGMS process. Also, the quality of glass produced and the flexibility of the melter to integrate with other processes will expedite development and commercial application of the full NGMS process. After this project, the melter will be ready to move to commercial trial for fiberglass and other glasses needing little or no refining. For other glasses, glass industry research or a Phase II project is expected to demonstrate rapid glass refining and to integrate the NGMS melting and refining stages.

Development of a new glass melting technology is a challenging undertaking, and no attempt to replace refractory tank melters has succeeded in the last 100 years. SCM, however, has been operated as an industrial-scale mineral wool melter for the last decade

and has proved highly reliable. The industrial units are air-gas fired, but GTI has demonstrated smooth operation of oxy-glass burners on a 300 lb/h melter with several siliceous melts. This experience provides a solid basis for extending SCM to industrial-glass production.

A number of hurdles must be overcome to develop SCM into the NGMS melter and to develop the full NGMS process. The wide glass making, combustion, modeling, and engineering knowledge and experience of the project team assure the technical feasibility of this technology. No other project in recent memory has captured the commitment of such a large portion of the glass industry. This strong support makes clear that there is a great need for a revolutionary new melting technology and that these glass industry experts believe the melting technology to be demonstrated in this project is technically feasible and meets all the cost savings, energy reduction, emissions reduction, and operability needs of the glass industry.

Status of development

Project work was initiated in the fourth quarter of 2003. A subcontract was put in place with A.C. Leadbetter and Son, Inc. for design and fabrication of the pilot-scale melter. Several decisions were reached regarding the melter. First, the original plan for a capacity of 500 to 1000 lb/h was changed to 2000 lb/h. This decision was reached when analysis determined that this capacity is required to achieve desired mixing and stable melt removal. The second decision made was to continue with a rectangular melt tank shape.

Project managers put a sub-contract in place with Prof. Leonard Pioro, the developer of the SCM technology. In meeting with him in December 2003, engineers discussed melter operation, melter components, and melter shape. The melter can have a round cross section. This offers several potential advantages, including lower heat losses through the walls and better control of batch charging and exhaust gas removal. At this time, however, the round cross-sectioned melter is unproven. The decision was reached to build the pilot melter based on the proven rectangular shape. CFD modeling and physical modeling of the melter will both include rectangular and well as round cross sectioned SCM units.

A meeting was held at GTI with representatives of the six glass company partners. At that meeting, details regarding the course of project activities were outlined, discussed, modified, and agreed to.

In response to the need to learn information on SCM glass melting at early as possible, the project team agreed to plan for at least two melting tests with the existing SCM pilot unit. The batch material will be supplied by the glass company partners, and they will also define glass sampling conditions and conduct analyses. The needed components for these tests, including the batch hopper, the charging system, the baghouse, the melt sampling system, etc., will be designed and fabricated with the intent of using the same components for the larger 1 ton/h pilot unit to be built for extensive testing in 2005. Work began on the conceptual design for the needed components and for the larger pilot

melter. Detailed designs were to be completed the next quarter, and tests were planned for the second quarter of 2004.

The project team discussed the CFD modeling approach with the lead FLUENT glass modeler, and an agreement was reached on a multi-step modeling approach. As soon as the contract with Fluent is in place, the CFD work will begin, with GTI and the glass companies providing melter and glass property data, respectively. By the end of year one (September, 2004), an initial model was to be developed and evaluated by the project team.

Physical modeling was also deemed to be crucial to understanding the melting system and to increasing chances of success. A GTI engineer was assigned the task of designing a physical model of the SCM unit. He will be assisted by engineers from Owens Corning and Corning with extensive physical modeling experience. During the first quarter of 2004, the scaled, dimensionless-unit based, modeling approach was to be developed and reviewed. Work in quarter two of 2004 was to focus on design and fabrication of the test unit at GTI. By the end of year one, initial physical modeling results for the rectangular melter using polybutene as a surrogate fluid was to be completed. Polybutene, at near room temperature, has similar viscosity-temperature curves to those of molten glass compositions.

Work has been initiated in a number of related, and important, areas. First, literature searches continued. Part of this was contracted to Prof. Pioro so a full history of SCM development and theory of the technology would be available. Other literature reviews involved studying world literature, and translating from Russian and other languages, relevent papers. Second, plans were initiated to examine several phenomena that could impact on glass melting in the SCM unit. These include devitrification caused by the externally-cooled walls and metal contamination caused by contact of molten glass with the metal walls. Crucible tests will be designed and carried out by the glass company partners. Literature will also be reviewed.

Communications and education are important to the success of this project. A website will be established for faster communication between project team members, sponsors, and interested parties. This site will be maintained by GTI with links to all member organizations. The project team also agreed to visit Europe in the summer of 2004. They visited several advanced European glass melters, the evaporative cooling on melters in Latvia, and working SCM units for mineral wool production in Belarus. This trip was combined with a European glass meeting to learn even more about advanced glass melting activities.

Patents

GTI holds world-wide rights to the submerged combustion melting technology outside the former Soviet Union. GTI also holds a patent covering portions of the technology. A new patent covering the combustion system used for oxy-gas firing was in progress and was expected to be filed in the next quarter.

The project team has agreed to form a consortium to develop the NGMS technology. GTI has agreed to provide the glass company members of this consortium royalty-free rights to submerged combustion melting for glass production. In return, the glass company consortium has agreed to support the project with cash, man-hours, and technical support. Other companies will be able to license the technology from the developing consortium. This arrangement is considered the most reasonable means to rapidly develop, commercialize, and disseminate the NGMS and submerged combustion melting technology.

Publications/Presentations

A number of presentations and papers have been published regarding submerged combustion melting and the NGMS technology. A presentation was made at a GMIC workshop held after the 7th International Conference on Glass Fusion in Rochester, NY held in July, 2003. A paper was prepared for presentation at the second Natural Gas Technology Conference to be held in Phoenix, AZ in February, 2004. Additional papers will be published throughout 2004, with a project review presentation for the DOE sponsors in the summer.

Budget data

The DOE contract was dated September, 2003, and work began in Oct. of 2003. Final contract negations are in progress for NYSERDA co-funding. Gas industry co-funding through FERC funds was approved after the fourth quarter of 2003 for $700,000, and the SMP portion of gas industry co-funding will be put in place during years 2 and 3 of the project. The glass industry consortium is working to finalize the consortium agreement. This agreement was to take place in the next quarter. At that time, GTI will enter into identical contracts with each of the six glass company partners. The overall project budget, and spending to date, is shown below. Only cash funding is shown. In-kind cost-sharing by Praxair, Fluent, and the six glass company partners is not shown.

Sponsors

Gas industry through FERC funding – project sponsor
CertainTeed Corp.
Corning, Incorporated
Johns Manville
Owens Corning
Owens Illinois
PPG Industries, Inc.
Saint-Gobain
Schott Glass Technologies, Inc.

Contacts

David M. Rue
Manager, Industrial Combustion Processes
Gas Technology Institute
847-768-0508
david.rue@gastechnology.org

Project Team

Elliott Levine
Glass Team Leader
U.S. Dept. of Energy
OIT, EE-20
1000 Independence Ave., SW
Washington, DC 20585-0121
202-586-1476
elliott.levine@ee.doe.gov

Brad Ring
Project Monitor
U.S. Dept. of Energy
Golden Field Office
1617 Cole Blvd.
Golden, CO 80401
303-275-4930
brad.ring@go.doe.gov

Beth H. Dwyer
Reports Monitor, Golden Field Office
1617 Cole Blvd.
Golden, CO 80401
303-275-4719
Beth.dwyer@go.doe.gov

3.B. High-Intensity Plasma Glass Melter

Plasmelt Glass Technologies, LCC (Ron Gonterman and Michael Weinstein with James K. Hayward), InnovaTech Services Inc., N.Sight Partners LLC, Laboratory of Glass Properties LLC, Tooley Design Services, Advanced Glassfiber Yarns, Johns Manville

Plasmelt Glass Technologies, LLC (Plasmelt) proposed to design, build, install, and operate a full-scale modular high-intensity plasma melter capable of producing 500 to 1,500 lbs/hr of high quality glass. Although the melter design is generic and equally applicable to all sectors within the glass industry, this project targets fiber, specialty, or press ware products as the initial sectors where the most rapid research, demonstration, and commercialization can occur. The plasma melter will benefit the US glass industry by significantly reducing energy consumption and reducing emissions while maximizing return on capital. Operations data are presented in this document that show plasma melting yields a significantly lower cost per pound of glass than traditional technologies.

This project builds upon documented plasma melter work conducted by Johns Manville in the late 80's/early 90's, which demonstrated melt energies 40-50% below conventional technologies. The major benefit is improved energy efficiency. This documented work has shown energy consumption numbers as low as 4.1 MM btu/ton vs. an industry average of 7.03 MM—a 41% improvement. Specific furnaces from our case history file suggest savings of 70% are achievable for some currently operating direct fuel-fired melters. Preliminary cost estimates for a full-scale plasma melting system (melter portion only) are approximately $500K, making the capital productivity extremely high. As detailed in the proposal, significant environmental benefits are also realized from the lower levels of NOx, CO_2, and particulate emissions, which the plasma melter produces. In addition to the low capital cost, energy and emission benefits, the plasma melter has several other advantages, including: 30-minute startups, ability to process scrap products, small / modular size, and ability to melt a very wide range of glass formulations with the same capital investment.

The project addresses the research priorities of new glassmaking technologies—non-traditional & refining; pollution prevention—solid waste minimization; post market recycling—fiberglass and specialty glass recovery/recycling; emissions measurement and control.

Organizational plan

Plasmelt Glass Technologies, LLC, a Boulder, Colorado based company formed by Ron Gonterman and Michael Weinstein will serve as the prime contractor for the program, and as the point of contact for all DOE communications. As detailed in the proposal, we have assembled a team of glass manufactures and leading technologists in the areas of glass melting, mechanical and environmental engineering. Cost Share Partners Johns Manville (J-M) and Advanced Glassfiber Yarns (AGY) are contributing equipment, intellectual property, labor, and expertise to support the research and prepare for early commercial installations. Technologists from InnovaTech Services and other consultants are supporting this work.

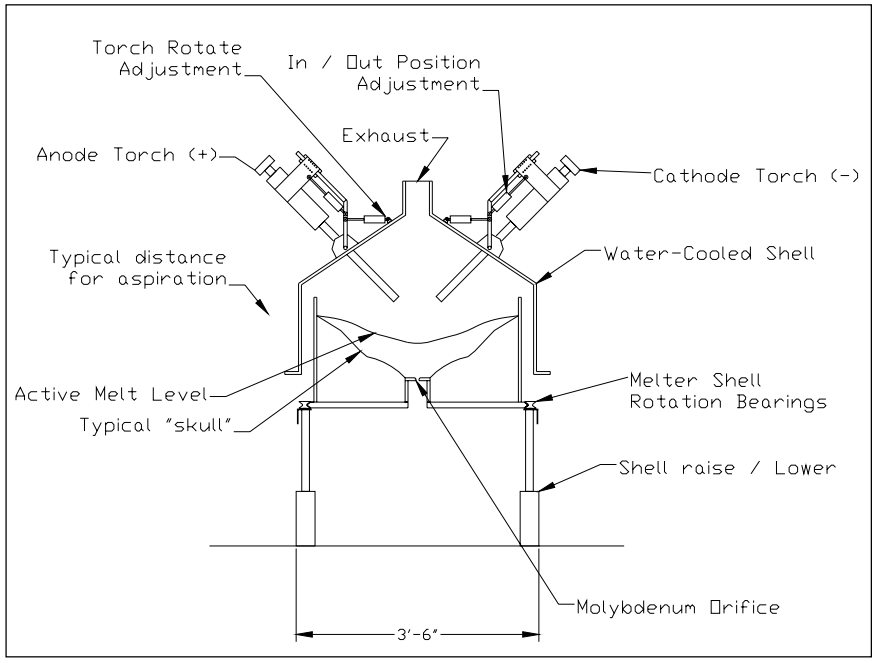

Figure 3.B.1. High-Intensity Plasma Glass Melter Schematic.

Application

Plasmelt Glass Technologies, LLC proposes to design, build, install, and operate a modular high-intensity plasma melter, generically suited to melt batch, cullet, scrap, refractory, and other feedstock materials. However, although the melter is generic, our system design is focused on the production of 500 lbs/hr of high quality glass suitable for fiber, specialty, or press ware products. From our analysis of the marketplace needs, these products represent the fastest pathway to validation and commercialization of the plasma melter technology.

The melter design selected for this program was one previously demonstrated in an R&D program at Johns Manville (J-M), and uses a dual torch transferred arc plasma to produce high quality glass with a high-energy efficiency. As demonstrated at J-M, the melter is more efficient than conventional designs and operates at 4.1 to 4.8 MM / BTU/ton (melting only) of glass at demonstrated glass pull rates up to 1200 pounds per hour. These melt rates and energy utilization data were demonstrated on a system that had not been optimized.

This proposal is focused on Phase I – conducting the advanced research necessary to produce high quality glass. Phase II, which is beyond the scope of this proposal, will involve either commercialization of the proven final plasma system design or will involve a system re-design in order to incorporate an integrated melter/rapid refiner if glass quality proves to be sub-standard.

Description of project

The project is designed to demonstrate the energy efficiency and reduced emissions that can be obtained through the use of a dual torch plasma arc melting system. The criteria for success is to produce a high-quality glass product using a full scale melting system, while attaining the predicted energy and environmental improvements.

Plasmelt will utilize a full-scale test melter system originally constructed by Johns Manville. The system is unique in that it utilizes a dual-torch plasma transferred arc heating system and rotating reactor. This configuration allows for very high temperature melting with improved heat distribution and control. This design has been demonstrated to achieve melt rates 5 -10 times faster than conventional gas or electric melters, with improved energy efficiency (approximately 50% improved), and reduced emissions.

Plasmelt has teamed with two cost share partners, J-M and AGY, to install and operate a 500 lb/hour melting system, which will be used to produce E-glass marbles that will subsequently be fed to a fiberizing process at AGY. During the melting tests, the process will be characterized to allow for energy and material balance analyses to be conducted. The melt trials will be used to determine relationships between melter operating methods/control parameters and energy use per ton of glass produced. This will allow for preliminary process optimization and determination of actual power consumption. The material balance will be used to confirm predicted improvements in process emissions. The improved emissions are due primarily to the elimination of combustion processes, though secondary benefits (reduced entrainment, volatilization, NOx, etc.) must be validated.

The melting system will be installed in lab facilities in Boulder, CO, which will be upgraded with the necessary material handling systems and marble forming equipment. Process trials will be conducted as discussed above. Once a satisfactory process is established (based on process stability and preliminary quality assessment of manufactured marbles), a production marble run will be carried out for fiber product and fiber forming process testing, including production scale fiberizing for the manufacturing of high quality textile fibers. AGY, a manufacturer of textile glassfiber products, will conduct these quality assessments. It is important to note that fibers have been selected as the product-form-of-choice for this project because they provide an excellent indicator of glass quality, in terms of both fiber product quality and fiber forming processability. Demonstrated product quality and process-ability, coupled with improved energy utilization and reduced emissions will prove that the process is a significant improvement over conventional melting. Successful performance testing at AGY will provide a positive indication that the glass quality is high and has a sufficiently low level of defects caused by seeds, stones, cord, or other in-homogeneities. These positive evaluations at AGY will provide very strong indications that the plasma melting process is a viable candidate for other sectors of the glass industry that utilize other glass compositions.

Innovative components

The proposed concept is to rapidly melt high volumes of glass in a melter with a very small volume, with improved energy efficiency (50% improved) and reduced emissions. Typical "square foot per ton per day" (SFTD) indices for commercial melters range from 4 to 15. Plasma melter systems have been demonstrated at throughput rates in excess of one ton/day with less than one square foot melt area (i.e. an index of < 1 SFTD). To achieve this high throughput and high quality, very tight control of the glass temperatures and mass flow of glass must be demonstrated.

Key innovative components of this project include:

- Dual torch transferred arc plasma technology applied to glass melting
- Rotating melt chamber to promote rapid melting, mixing and refining of the glass product
- Skull melting to eliminate the need for a refractory lining and to reduce contamination of the glass from refractory and electrode components
- Non-nitrogen torch gases (e.g. argon) to reduce or eliminate NOx emissions
- State-of-the-art controls technology to provide stable glass-melting conditions
- Ceramic materials applied as new and novel components in torch design
- New, high-intensity, small-volume melter design capable of melting 500 lbs/hr, < 1SFTD
- Generic design melter that will be applicable to several glass industry segments, including scrap re-melting—"one design fits all."

Technical feasibility of the concept

Plasma melting of glass has already been successfully demonstrated in the laboratory; therefore the project builds on an extensive, existing research base. During the late 80's and early 90's, several man-years of work was successfully conducted by J-M with the objective of using transferred arc plasma melting technology to melt E-glass batch, as well as E-glass and insulation scrap glass. Patents were granted in recognition of these efforts—US Patent No.'s 5,028,248 and 5,548,611. The work successfully demonstrated melting at rates up to 1200 lbs/hr, though glass quality and process ability were not addressed by J-M's project. In spite of J-M's success, their work was terminated for business and technical reasons in the mid-90's and the process was never commercialized. Materials / control technology has advanced and the financial benefits of plasma melting have increased in recent years. As a cost share partner, J-M has agreed to contribute their research technical files to the investigators on this project, allowing the team to rapidly re-start the process research by building upon the extensive existing database. This will eliminate the time required for costly background research and design for both the melter and the torches. Of equal or greater importance to the success of this project is the fact that Michael Weinstein, who was J-M's project manager of plasma melting, is a co-principal investigator on this proposed Plasmelt DOE program.

Plasma melting is being successfully applied in a number of commercial installations by companies such as Westinghouse, Tetronics, and Retech. These applications include silica fiber production (Japan), production of metals (aluminum, other specialty metals), refractory production, vitrification of waste (municipal, medical, hazardous, and nuclear waste streams), plasma cutting processes, and various other specialty melting processes. Plasma technology is highly developed for these applications, though it is typically of the non-transferred arc mode.

Transferred arc plasmas are the most energy efficient method of utilizing plasmas to melt glass. However, none of these applications above have applied transferred arc plasma melting to high-quality glass manufacturing. Although traditional plasma technologies can be used for melting most materials, the high resistivity of the selected glass compositions and the tight quality requirements necessitate unique configuration of the plasma torch, reactor, and control system. The standard configuration used by these other companies in their applications is not effective in highly efficient glass melting.

Plasmelt has assembled a world-class group of scientists, engineers, and experienced R&D managers to execute the High Intensity Plasma Melting Project. This team, along with the combined efforts and experience of the cost share partners, AGY and J-M, give the project a very high probability of success.

Development history

Plasma melting technology has not been extensively investigated for *high quality glass melting* since it involves a significant paradigm shift from the traditional glass melter design—even though such shifts represent potentially high reward. Commercial development of high intensity melters has generally relied on traditional technologies (gas, electric, enhanced mixing). The high-intensity melter system proposed here is small with a highly concentrated energy source that reportedly achieves arc temperatures in excess of 20,000^{o} K. Different melter designs and procedures must be developed to make the best use of this high-temperature energy source, a departure from the approaches currently used by most glass companies. The paradigms surrounding the design and operation of traditional glass melting must be challenged in order to realize real step function changes in efficiency and throughput.

The process presented here is a hybrid of typical plasma torch designs, and represents a departure from the better-known single torch transferred or non-transferred configuration. The dual torch design applies the anode and cathode through two separate torches, i.e., an anode torch and a cathode torch. This approach is commercially available, and has been applied in both typical metal torch and graphite torch configurations. The dual torch configuration allows for better heat distribution and better process control by permitting fine adjustment of the heat transfer between joule and plasma heating. Though it is offered commercially by several manufacturers, the dual torch design is more specialized and has not been applied as extensively as single torch systems. The work by J-M clearly demonstrates its processing potential, as well as the potential for success. This dual torch design uses no glass contact electrodes and avoids several adverse chemical reactions in the glass that might otherwise result from the use of submerged metallic or graphite electrodes.

The design and operation of a technology that is new to the glass industry requires significant investment in time and resources in order to conduct the required advanced research. The lack of expertise with plasma technology within glass companies further adversely impacts the acceptance of plasma technology by them. Today, most US glass companies are risk-averse, are more short-term oriented, and are capital-constrained. Therefore, it is highly unlikely that any one company will invest the resources required to perform the research to develop a technology that is a departure from their current technology base, and may be seen as high-risk due to unfamiliarity in the technology.

Project goal and scope of work

Develop an efficient 500 lb/hr transferred arc plasma melting process that can produce high quality—glass suitable for processing into a commercial article.

Design, construct, and operate a 500-lb/hr melter that is generically suited to many specialty glass segments across the glass industry. Initially, E-glass will be melted at the 500-lb/hr level, and glass marbles produced. These marbles will be subsequently re-melted and processed into

glass fibers at a location operated by a cost share partner. A cost share partner will assess the glass quality through testing of both the fiber product and the fiber processing characteristics. Testing with other compositions will follow if there is sufficiently high fiberglass quality to interest companies from other sectors.

Technology transfer plan

This proposal is unique. The technology being tested was initially tested by J-M, one of the industry partners. The participation of AGY further indicates the desire of industry to see this technology brought to market. The continued participation of each of these companies sends a clear message that the technology is of interest, and that a successful development program would benefit them commercially. AGY and J-M represent two short term, high-probability opportunities to rapidly transfer the technology to industry users.

Plasmelt has been formed to serve as the prime contract holder for this program. In addition, Plasmelt will also serve as the foundation for commercialization of the developed technology. To support commercialization, market analysis studies will be conducted during Year 1 of the project and be run concurrently with the R&D. This work will be completed before the end of Year 1 and will form the foundation for the Plasmelt business and marketing plan.

Plasmelt has entered into an agreement with JM that grants exclusive rights to Plasmelt to commercially exploit the JM technology that is covered in their two patents and that resides in the JM technical database. Through this agreement, Plasmelt now has the rights to license and distribute the technology to third parties. After acquiring these exclusive rights, Plasmelt plans to market the developed technology to other users in the marketplace, offering the process for sale (equipment and users license), as well as process development, pilot plant evaluations, and equipment process support.

Assuming that the Phase I testing indicates that the product is of satisfactory quality and process ability, commercialization efforts will immediately focus on placing the first integrated installation within the glass fiber sector. AGY has stated their serious interest in being considered as the first installation, with this activity possibly being carried out during Year 2.

The Boulder Lab will be maintained as a pilot facility in order to continue to do melting feasibility studies with any glass company that has an interest in specific glasses or specific products and/or scrap reclaim programs. Two other major US glass companies have already stated to Plasmelt an interest in testing the glass that will be produced in the Boulder Lab. Both of these companies have stated a serious interest in plasma melting for their own commercial operations, which includes lighting tubes, lab ware, TV tubes, LCD screens, optical fibers, and flat LCD screens. These test programs will be conducted by Plasmelt on behalf of the customer, permitting environmental, product, process, and energy use assessments.

The melter to be installed in Boulder will be designed with portability in mind such that the melter system may be transported to prospective client locations for their onsite evaluations using their own existing glass processing and forming systems. The capability of this plasma melter will be evaluated for use in as many sectors within the glass industry as possible. Active market development efforts will target these other sectors. The Boulder test site will be

maintained as a process development and demonstration facility, which can be accessed by clients either for Plasmelt funded demonstrations, or on a for-fee basis for process/product testing programs.

The development and demonstration of the concept will require a minimum of 1 to 1.5 years at the Boulder Lab. The initial target is the textile fiberglass segment, since we expect to demonstrate throughputs that can quickly be put into commercial use within this segment (i.e. 500 lb/hr). AGY is our first target location.

Energy and Environmental Benefits:
The plasma melter benefits to the glass industry include:

FEATURE	BENEFIT
Low melting energy- 4.1MM BTU/ton vs Fiber sector average of 8.42 MM	**50-70% improvement in energy use** vs. direct firing
Low cost melter	**Significant capital cost savings** (melter, APC, facility cost). Estimated system cost ~ $500to $700,000
Uses little or no refractory	**Environmental gains** / lower operating cost
	No glass contact with refractories
Low melt volume allows 10 minute Startups	**Rapid product changes** with minimal waste
	Ability to turn melter on/off; **energy efficiency**
Modular design allows additional units to be added	**Production efficiency**; match market demands
Ability to change products daily	Increase market share for niche products
Uses inert plasma gas/electric arc	**Reduce emissions**; eliminate combustion products
	Reduced exhaust abatement (APC) equipment
Very high melt temperatures achievable	Ability to melt **specialty glasses** / refractories
Plasma anode and cathode (non-submerged)	Eliminate glass contamination/electro-chemical glass reactions caused by submerged electrodes

In addition to the batch melter features and benefits listed, the plasma melter has already been proven in recycling scrap glass material. The same melter used for batch melting can accept a very wide variety of scrap glass materials and can process these at temperatures high enough to burn off all binders and yield a glass. The economic benefits can be further enhanced when the same capital investment can be used for multiple functions.

The relative value of the benefits listed will vary for different applications. In many cases, just one of the benefits can provide the financial return to justify the use of plasma technology. Two or more of the benefits listed can provide a significant competitive advantage.

The plasma melter technology will reduce the emissions while providing the opportunity to recycle scrap products that would have previously been buried in a landfill. In addition to providing the financial competitive advantage gained from the improved capital productivity, the environment will benefit from the advancement of this technology.

Environmental Impacts
The plasma arc melting process that is referenced in this proposal is intended to replace smaller unit melters and recuperative melters that rely on fossil fuel combustion heating processes. This technology will reduce and/or eliminate many of the environmental source terms associated with combustion processes and glass melting. Additional environmental gains will be realized through reduction in solid wastes such a flue slag, refractory [including high-chrome glass contact refractory, recuperator refractory and superstructure refractory], and air pollution control (APC) system filter and scrubber wastes. Secondary impacts include the downsizing and/or elimination of many of the large, capital and maintenance intensive features required by fuel fired melters, including recuperators and APC unit operations such as scrubbers, baghouses, and de-NOx units.

Design Features Impacting Improvements
An essential design feature of the plasma arc melting system is the elimination of fuel combustion, which produces high gas flows and requires large areas for batch melting. Gas flows associated exclusively with batch/glass heating are typically in the range of 650-1200 lb/ton glass, at exhaust temperatures of around 1000ºF after heat recovery. Inleakage and/or excess air requirements may increase the final flow rates 5-10 times. In the plasma arc system, argon torch gas is utilized as the ionization gas, at approximately 5-10% of the mass flow rate of combustion gases, or less than 1% of total emission rate of a gas fired melter (i.e. 99% reduction). CO_2 and H_2O formation from combustion is eliminated by elimination of hydrocarbon fuel requirements. NOx generation is also less, since the N_2 and O_2 concentrations are reduced, and the temperature regimes (space/time) are less conducive to the formation of thermal NOx that is formed in the flame zone of fuel fired melters.

Combustion products
CO_2 and water production from air-fuel firing accounts for 1500 lbs off gas/ton glass in pressed/blown product melters, and over 2000 lbs off gas/ton for textile fiber melters. Oxy-fuel firing reduces this by approximately 25-50% in direct proportion to the lower fuel requirements. This is still 10-20x the anticipated rate of argon flow into the melt chamber. The reductions represented by application of plasma heating have a direct impact on entrainment and sizing of the air pollution control devices, resulting in less loading and lower capital costs.
NOx: Fuel NOx is eliminated with the elimination of the nitrogen-containing hydrocarbon fuel sources. Some thermal NOx formation is anticipated, though the amount formed will be much lower than air-fuel or oxy-fuel firing, due to the limited amount of gas fed to the melter and the gaseous atmosphere present around the arc. Argon will serve as the torch gas, which will help purge the arc area of the NOx precursors (N_2 and O_2). The conditions for NOx formation will be limited, due both to the argon purging and the high temperature gradients that exist around the arc. The radiant heating will be localized around the arc, which in turn limits the volume and residence time for oxidation of the nitrogen to occur.

Entrainment: The argon torch gas provides a small volumetric flow relative to fuel combustion systems. The laboratory unit will require 300-600 cubic feet/ton glass (~5-10 cubic feet per minute. This eliminates the high volumes of combustion products (CO, CO_2, and H2O) and NOx, which account for almost all of the offgases generated in the melt area (less batch moisture and decomposition products). Replacement of combustion heating with plasma also minimizes

entrainment by reducing melter size (i.e. surface area reduced over 90%), gas flow, impingement and turbulence.

Volatiles: The melt rate of the plasma arc melter system is anticipated to be 10-20 times greater per unit surface area than conventional fuel fired melter systems. The reduction in surface area per ton, and the presence of unmelted batch on the melt surface, are expected to reduce the volatilization of boron and fluorine, as well as volatile alkaline species. The amount of improvement will be a function of the batch composition, melt rate (i.e. kinetics), and the localized melt surface temperatures. .

The following is a summary of data referenced in OIT's Energy and Environmental Profile (April 2002), and anticipated improvements that are expected from the demonstration. Where available, the technical basis or logic behind the improvement has been provided.

Furnace/ segment	**Particulate** (lb/ton)	**SOx** (lb/ton)	**NOx** (lb/ton)	**CO** (lb/ton)	**Fluoride** (lb/ton)	**H_2O, CO_2 (combustion)** (lb/ton)
Insulation Fiber Glass						
Regen/Recup	0.02-1.08	10	1.7-5	0.25	0.11-0.12	
Gas-Direct	9	0.6	0.3	0.25	0.12	
Textile Fiber Glass						
Regen/Recup	2-16	3-30	20	0.5-1.0	2	
Gas-Direct	6	ND	20	0.9	2	
Pressed/Blown Glass (Uncontrolled)						
All	17.4	5.6	16.8-27.2	0.2	ND	
Plasma Improvement Estimates						
Improvement	>50%	25-50%	>90%	100%	25-50%	100%
Reference	Textile	Textile	Textile	All	Textile	All
Basis Notes	1	2, 4	3	4	2	4

1) 90-95% reduction in gas flow relative to gas firing combustion product emissions
2) Surface area for equivalent melt rate is 75-90% less than conventional melters of similar throughput (Plasma at < 1 sf/ton/day, versus 4-15 sf/ton/day for conventional melters)
3) Argon torch gas, limited reaction volume, high temperature gradients
4) No partial combustion or other combustion products due to elimination of carbon based fuel sources; no sulfur contamination in fuels

Also, many experts agree that the ability to use gas-fired melters will be compromised in the 10- to 20-year time frame. Plasma technology is a natural alternative to gas-fired melters. Investment in plasma technology now will provide the technology required in the future.

Economic Benefits

High Priority Target Markets for this plasma melting system (size shown in tons per year*):

• Pressed/Blown Glass	Current Size	2010	2020
Regenerative –	645,887		
Direct Melters –	844,622		
Electric Melters –	124,209		
Oxy-fuel -	869,464		
	2,484,182	**2,930,000**	**3,570,000**
	($5.8 billion)	**($6.8 billion)**	**($8.3 billion)**

(High Priority Target Markets cont.)

• Fiber Glass			
Insulation Electric –	1,436,400		
Insulation Recuperative –	402,192		
Insulation Oxy-fuel –	76,608		
Textile Recuperative –	1,079,808		
Textile Oxy-fuel –	44,992		
Total tons	**5,524,182**	**6,700,000**	**8,170,000**

**All numbers are referenced from the Glass Technology Roadmap. Fiber $ NA from roadmap.*

Penetration of the proposed technology into this market(s).
The new plasma melting system will become very competitive in selected segments of the Press/Blown and Fiberglass Sectors.

Press/Blown	2005	2010	2015	2020
Million tons	2.65	2.93	3.23	3.57
Applicable MM T	.045	0.139	0.369	0.772
	(4.4%)	(12.2%)	(29.3%)	(55.5%)
Fibers				
Million tons	3.42	3.78	4.17	4.61
Applicable MM T	0.151	0.461	1.222	2.557
	4.4%	12.2%	29.3%	55.5%

Project Status (April 2004)
Most of the infrastructure and system fabrication are complete in the Plasmelt Boulder Lab. These include:

- Plasma Torches
- Power Supply and All Electrical Sub-systems
- Water Chilling and Cooling Systems
- Purge Gas Systems
- Melter Shell and Accessory Systems
- Vent Hood, Ductwork, and Blower System
- Electrode Positioning Systems
- Mezzanine Structure
- Glass Batch Handling Equipment
- Cullet Handling System

Glass melting began two weeks before the end of the March quarter. Thus far, we have conducted several preliminary runs aimed at de-bugging the process and testing different iterations of torch designs. Limited quantities of glass have been produced. The objective of this early melting work is to systematically search out and eliminate all process bugs as well as identify torch designs that will allow us to continuously operate the process for several hours. The pre-requisite must be met before we can earnestly conduct the process development work that is scheduled for April, May, and June. This process development work is our highest priority.

Results thus far are encouraging. The process is now operating under the approximate conditions that were in place when JM ceased their operations several years ago. We have been able to accomplish this re-construction work in less than six months of effort. During this time, a building was leased, equipment was acquired, evaluated, and refurbished. The building electrical system was upgraded to the required 1.5 Megawatts of power. A batch feeding system was acquired and installed that met the batch handling specifications that were identified. The melter was designed, fabricated, installed, and debugged. The venting system was designed and installed. Water cooling equipment was acquired, installed, and rendered operational. Purge gas (argon and nitrogen) capability now exists and has been interfaced with the torch operations. Several iterations beyond the JM torch designs have already been tested. These designs are toward the Plasmelt goal of improving the fundamental JM plasma torch design as a means to increase the torch life, reduce the maintenance costs, and improve torch reliability during glass melting operations. This design improvement work is expected to continue throughout the life of the 2-year program.

Work is still in progress to complete the designs of the glass delivery system that will transfer glass from the melter orifice to the marble machine. Preliminary designs have been completed by the Plasmelt design team consisting of Ron Gonterman, Mike Weinstein, AGY engineers, and our sub-contractor, Jim Hayward. The initial indications are that this new design will require a 6 to 12-foot long forehearth upstream of the marble machine. The marble machine has very specific requirements for the control of glass temperature and glass mass flow rates, which is the main reason for this marble production forehearth. The cost estimates for this preliminary design are significantly greater than the allowances that are now included in the approved overall plasma project budget. Therefore, we are in the process of investigating lower cost alternatives to marble forming as well as preparing a revised overall cost estimate for our Year 2 budget.

Unless additional funding is secured for Year 2, marbles will not be produced. The impact of this change will be to increase the risk that cullet from the melter will not be in a form that can be fiberized by our cost share partner—AGY. The fiberization of this glass was the most robust quality test that we could devise. Successful fiberization into 10 micron fibers would form a foundation for our work in other segments of the glass industry and provide data to these other segments that the quality was sufficiently high to be considered for their own quality assessment. Without convincing quality data, the probability is reduced that other segments will become interested in evaluating the technology.

The major goal of the plasma program, to produce a high quality glass, must not be compromised since this is a key requirement of the project. Our ability to acquire data to show the high quality nature of the glass is very straightforward with marble-making and fiber forming from these marbles. Any cullet form other than marbles will necessarily impart more risk to the program objective, so we are approaching this decision with a great deal of caution. A major decision must soon be made about eliminating the marble milestone from the program or securing additional funding.

A market study is being conducted. The scope of work includes the identification of glass industry segments and companies that will find economic advantage by using the assumed attributes of the plasma melting system. In addition to the market study, a technical and economic analysis (TEA) is being performed to compare the projected operating and maintenance costs using the plasma melting system to the costs of the current systems used by the cost share partners. This TEA is built upon several assumptions that will be validated by the next six months of work in the research program. This study will serve as the foundation for the development of a Plasmelt business plan in Year 2 in which our goal is broad implementation of plasma technology within the glass industry. The study will also identify any likely early adopters of this technology, on which we plan to focus our initial efforts.

3.C. Advanced Oxy-Fuel Fired Front-End

Owens Corning (Steve Mighton)
in collaboration with Osram-Sylvania, Inc., BOC, Combustion Tec/Eclipse

The U.S. glass industry, working with its supply industry, has proactively taken measures to improve its energy efficiency. The implementation of oxy-fuel fired furnaces and a host of new generation burners have resulted in much improved furnace energy efficiency and productivity. The improvement in furnace energy efficiency has resulted in a redistributed energy usage in the glass manufacturing process. With furnaces operating on oxygen firing, the front-end system, in many cases, has become the largest energy user in the entire glass production process.

The glass industry has been widely recognized as one of the most energy intensive manufacturing industries in the United States. According to the Glass Industry Technology Roadmap published by the Glass Manufacturing Industry Council (GMIC)[1], the U.S. glass industry consumed over 250 trillion Btu of process energy in 1994. Approximately 80% of this energy was in the form of natural gas. The total purchased cost of energy represented over $1.7 billion to the industry in 2000, making it one of the largest costs in the manufacturing of glass products. In addition, the fluctuation in energy prices, particularly natural gas, has a significant impact on the business end of glassmaking.

In the past decade, energy improvement efforts have been focused primarily on the melting end of the process. Although efforts have been made in improving the glass quality in the front-end, little has been done to significantly improve its energy efficiency. In some manufacturing processes, the energy usage in front-end systems represents close to 60% of the total process natural gas consumption, making it the biggest target for significant improvement in energy use and savings.

A conventional front-end system typically uses an air/gas firing system. The air and gas are mixed and then passed through a system of pipes to a large number of burners, typically 100 to 4000 burners. The burners are air-gas mixture burners. Due to safety concern, the gas/air mixture is not preheated resulting in poor energy efficiency. In addition, because of the large number of burners, a network of piping and control systems are required, representing a big capital investment to the industry.

Summary of Program

The focus of the program is to develop and demonstrate an advanced oxy-fuel fired front-end system that will significantly reduce natural gas consumption in the overall glass manufacturing process. The proposed technology is expected to reduce front-end energy usage by at least 70%. The development of the technology will ensure that it can be implemented on a current production system or be systematically integrated into the development of a new generation front-end systems. The proposed program will: (1) develop burner systems that can be integrated into an operating front-end system; (2) develop and test a firing system that will reliably meet the needs for front-end system

operations with minimum capital costs; (3) field test the firing system(s) to obtain data such as controllability, durability, etc.; (4) demonstrate the technology on a production front-end system with over twenty firing zones to prove the various benefits of the technology; and (5) work with participants from the glass industry for proliferation of the technology to other sectors of the glass industry.

Research Priority The proposed research project addresses the development of more energy-efficient processes for refining and delivery of glass to the forming machines as indicated in subtopic (c) Advanced Refining under Energy Efficiency of the solicitation. To improve energy efficiency is a key priority in the Energy Efficiency area in the Glass Industry Technology Roadmap. Moreover, the proposed technology is also expected to improve the glass fining process by significantly improving the thermal homogeneity of the glass that is critical in many downstream forming operations. The projected high product yield will help in achieving the Production Efficiency target of improving operating efficiency by 25% by 2020. For new construction, the proposed technology can also reduce the capital costs by replacing the massive piping and control systems for air firing with compact oxygen firing systems. This represents significant savings in capital costs that supports the Production Efficiency target of reducing capital costs by 25 to 50%. Finally, the proposed technology will significantly reduce CO_2 and NOx emissions of front-end systems. It is estimated that on an oxy-fuel fired furnace, the proposed front-end firing technology will result in at least 30% reduction of CO_2 emissions and 50% reduction of NOx, which strongly supports the Environmental Performance goal of reducing air emissions by at least 20% by 2020 as delineated in the Glass Industry Technology Roadmap.

Project Participants A consortium consisting of two major glass companies and two leading companies from the supporting industry has been established in April 2002. The consortium consists of Owens Corning, Osram-Sylvania, BOC, and Combustion Tec/Eclipse. It represents a crosscut in the glass industry supported by expertise from companies with profound knowledge in oxygen production and development and manufacturing of combustion equipment and controls.

Roles/Responsibilities The program is structured to take advantage of the unique but complementary expertise of the participants. Owens Corning will take the lead in the technology development and provide a host site for the technology demonstration. Osram-Sylvania will provide expertise in guiding the development of the technology to ensure that it is sufficiently flexible for implementation in front-end systems in, among others, the lighting and TV glass sectors. BOC will provide expertise in areas of oxygen production, delivery, and combustion in oxy-fuel environment. Combustion Tec/Eclipse will provide expertise in engineering of combustion control systems specifically for front-end systems as well as oxy-fuel burner manufacturing and combustion performance characterization.

3.D. Segmented Melting System

Ruud Beerkens, *TNO, the Netherlands*

Presented at the International Congress on Glass 2001

One of the most important technological challenges in developing a segmented tank furnace for the glass melting process is regulating the rate of heating the batch from room temperature to fusion temperatures. Without backflow or with only modest re-circulation from the hot spot area to the batch blanket, the batch must be heated from above by the flames or underneath the blanket by electrodes. To limit consumption of electric energy, a method must be developed to effectively heat a thin batch blanket by the flames or flue gases. Using waste gases of oxygen-fired furnaces to preheat batch may be the way to improve energy efficiency.

In the segmented melting concept presented in 2001 at the International Congress on Glass, the batch-preheating zone becomes an extended part of the glass furnace. The combustion gases flow from the combustion space to the recuperator or regenerator, passing first over the batch blanket in the extended batch-preheating zone. Heat transfer is most effective in a counter flow direction of the waste gas relative to the batch blanket moving into the melting end. The heat transfer is mainly from the topside, with hardly any heat being provided underneath the batch unless boosting electrodes are used in the premelting zone.

In the batch heating section, the total net heat demand of 80 to 90 percent has to be transferred to the material. The flow is mainly plug flow, and the final temperature must be 212-302˚F (100-150 ˚C) below the fining onset temperature to avoid early decomposition of the fining agent. The batch must be charged as a very thin batch layer to increase the heat penetration into the batch blanket. By decreasing the batch thickness by 50 percent, the heating rate for the center of the batch will increase by a factor of four. Batch boosting may help heat the batch blanket from underneath.

The most critical aspects of the segmented melter design are the heat transfer to the melt in the first section and the time available for fining in the shelf sections. Although it is expensive to do so, electrodes can be used to aid the melting process. Thin batch layers, bubbling, and counter flow heat exchange between the flames or exhaust gases and the batch or melt will improve the process. Fining can be supported by a very shallow shelf, a longer shelf size, or evacuating the space above the fining zone or other techniques such as sonic waves, preconditioning of the melt by a fast diffusing gas, or extra heating to reduce fining time by about 50 percent.

In this furnace design, the different segments are directly connected to each other by either narrow canals, which limit backward moving glass flows, or by overflow weirs that prevent all back flows when the melt from a previous section is gently poured into the next basin. The glass melt film poured into the basin can be rather thin and the heating of the film by flames can be performed. This method increases the temperature of the melt within a short time when the melt passes the connection between the melting zone and the fining shelf.

However, the fundamental question remains. How can the batch effectively be heated to melting temperatures without requiring a very long batch blanket zone and without an intense glass melt backflow from the hot spot zone of the glass melting aggregate?

• Batch preheating

Charging a thin batch layer or charging a thin compressed batch sheet in an internal batch preheating zone requires a new design for this part of the furnace. A counter flow heat exchange between the flue gases and the thin batch can heat up a blanket of a few centimeters thickness (3-4cm) within about 10 to 15 minutes to 2282 ˚F (1250 ˚C). This requires a shallow internal preheating area of about 20 to 25m^2 for 250 tpd. Energy savings of more than 10 percent can be achieved by this internal batch preheating system.

• Sand dissolution

To speed up the heat transfer from the surface to the deeper glass melt layers, strong convection by stirring, bubbling, or large temperature differences is important in the sand grain dissolution section of the segmented melter. Sand grain dissolution is enhanced by this convection and the resulting velocity gradients. The temperature should not exceed the fining onset temperature. Extra heat input in this section is only 5 to 10 percent of the total net heat input required to melt the glass. Efficient insulation should limit energy losses through the furnace walls.

To avoid excessive evaporation, the glass surface temperature should be controlled at a level just below 2552 ˚F (1400 ˚C) for soda-lime glass melting. Homogenization of the melt takes place in this section. The velocity gradients must be minimized at the refractory walls to limit the dissolution of refractory components in the melt. The sand grain dissolution, or melting section, is connected to the fining section by a narrow or shallow canal. According to the calculations, re-circulation can be practically limited to a level of 20 to 30 percent of the forward flow current. Just upstream from the primary fining zone, the melt should be heated at least to the fining onset temperature and, depending on the volume and pressure in this compartment, a certain excess temperature above the fining onset temperature value.

The total net amount of enthalpy required to heat the melt to these temperatures is only 5 to 10 percent of the total net heat input. Relatively cheap fossil fuel combustion can provide this heat. However, this will lead to high glass melt surface temperatures from exposure to the flames, as in conventional furnaces, and to poor heat transfer.

Another option is to use electric energy to heat the hottest part of the furnace (fining section). The extra electric energy added in the fining compartments is more expensive then fossil energy, but it comprises only about 7 to 10 percent of the total energy consumption for melting. This small amount of electric energy is more effectively used, and most of the energy for the melting process can be supplied by fossil fuels. Therefore, all the molten glass in a small section of the furnace is raised to a very high temperature by using a small amount of electric energy, enhancing the fining for the total melt without large increases in energy costs. In common electric boosting, the electric energy provides

supplemental energy input in a form more effective than would be possible by increasing the primary fuel. Traditionally, electric boosting is applied to avoid low bottom temperatures in a tank in which colored glass is melted.

• Fining zone

In the fining zone, the glass melt should not be exposed to strong mixing effects; a plug flow regime is preferred. Residence time required in the fining zone depends on the depth of the melt in this area. A deep melt requires a long residence time and a high surface temperature, if heated from above, to obtain a sufficiently high temperature level in the bottom layers of the melt. The temperature gradients from the surface to the bottom and both ends of the furnace to the hot spot cause glass convective flows to well upward, resulting in the formation of a spring zone, or spring line, for refining where a line of bubbles or foam exists near the forward fuel firing port. This defines the end of refining and the beginning of thermal conditioning, also the highest temperature glass in the furnace.

Low-pressure will enhance bubble growth and bubble removal, as well as gas stripping. A plug flow shallow fining zone, using electric energy and low pressure (<0.3 bar), will require a very low residence time for complete fining (one to two hours). Low pressure fining requires a high, well-sealed fining shaft. The refractory must be lined on the inside with a nonporous material such as molybdenum or a noble metal shield. A lining at the outside can also be used to seal the low pressure-fining shaft, but the gases in the inner material layers will limit the rate of evacuation. The sub atmospheric fining shaft has to be a rather tall design, 2 to 4m above the level of the melting section, to compensate for the pressure difference between the melting section, atmospheric, and the finings section. Sub atmospheric refining (SAR) is considered one of the key technologies advance the glass melting process. SAR has the potential to obtain higher quality glass while reducing cost and environmental emissions.

After an effective primary fining process, a melt with low concentrations of dissolved gases and only small bubbles from the fining gas remains. Gases in the bubbles can re-dissolve in the melt during controlled cooling from the primary fining temperature (2552-2912 ˚F [1400-1600 ˚C]) down to the temperatures of 2192-2372 ˚F (1200-1300 ˚C). The volume of the refiner zone depends on the quality of the primary fining process and the cooling rate achievable in the refiner or working end. A deep refiner helps in the separation of a melt without seeds and a melt containing retained seeds. The required residence time in the working end or refiner depends on the completeness of the primary fining stage and on the required cooling rate.

• Refining and conditioning

The glass melt must be cooled down slowly in the refining and conditioning section to avoid freezing in residual seeds. To obtain a melt with uniform viscosity needed for forming, the cooling process should be uniform. For soda-lime silica melts, slow cooling between 2642 and 2282 ˚F (1450 and 1250 ˚C) is essential because gases dissolve in the melt with a relatively high gas diffusion rate. Cooling of the melt in the working end is best performed in a series of small mixers to ensure uniform cooling. The temperature

control per mixer will optimize the cooling rate and contribute to homogeneity, especially if cords or knots have been formed by the interaction of molten glass with the refractory lining.

• Deep refiner
The well de-gassed melt flows on top and then downstream along the bridge wall and sidewalls into the throat in this deep refiner segment. The melt in the center re-circulates, allowing small bubbles to be removed in the refiner part. Homogenization occurs because of the strong re-circulation. The difference between minimum and average residence time (volume/pull) is still a factor of five but this concept allows a reduction of the tank volume of about 25 percent compared to conventional furnaces.

Only about 8 percent of the total heat demand must be added in the fining shelf. Instead of heating the melt by combustion processes, the melt might be heated from 2462 to 2750 ˚F (1350 to 1510˚C) by boosting or magnetrons, allowing further reduction in surface temperatures and good temperature control during fining. Bubbling, weirs, or boosting electrodes can be used to control the flow regime, to increase mixing, or to limit backflow. The minimum residence time from chargers to the throat of the segmented tank is typically low—three to four hours—but all the glass melt volume has been exposed to temperatures of at least 2678 ˚F (1470 ˚C). Minimum residence time can be increased by weir walls over the tank width.

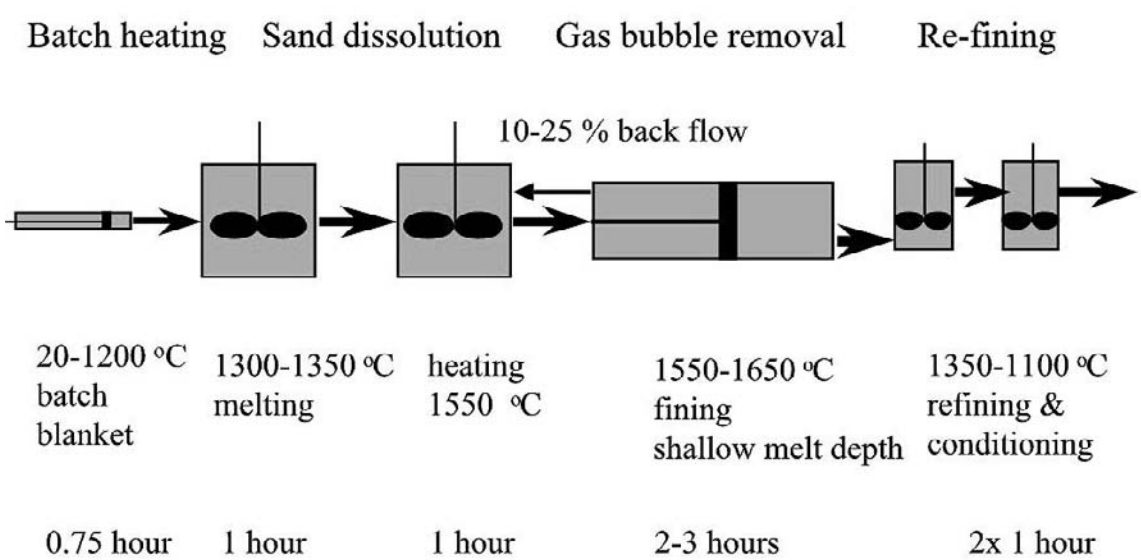

Figure 3.D.1. Schematic arrangement of sections of a segmented melter, with typical temperature levels, residence times, and heating options.

Appendix

A. Literature Review Glass Technology
    1. Categorization of Literature
    2. Categorization of Patents
B. Glossary
C. Contributors and Sponsors
D. Technology Resource Directory

A. Literature and Patent Review—Glass Technology

In developing the body of this report, the principal investigators began the process by accumulating and reviewing a volume of background literature, primarily registered patents and technical articles and papers found in a broad variety of publications from around the world. With this advantage, they then began to interview the many industry professionals who provided the bulk of the input to this document. Recognizing that this effort was probably unprecedented and would likely disappear if not preserved as a permanent record, the principal investigators pulled the data together into an extensive table that provides not only the title and source, but also, where appropriate, a chart indicating the relevance of each article, paper or patent to one or more of the 22 focus areas in glass melting process.

Note: Many of the publications are available on a CD obtainable at cost from the GMIC. Contact to obtain a copy.

Relevant literature on glass melting technology has been reviewed extensively for relevant concepts, ideas, experiments, production methods and patents as a basis for this technical and economic assessment of glass melting. More than 500 articles or abstracts and 325 patents were evaluated with regard to technical and financial/economic concerns; and applications for relevance to innovations in glass melting procedures.

The lead institution for the literature and patent search was the Scholes Library at Alfred University, Pat LaCourse, technical librarian. Other participates in the search included Owens Corning Knowledge Resource Center, Ohio; Thermex International, St. Petersburg, Russia; and Masamichi Wada Consulting, Japan.

The literature and patents are classified into 22 categories that comprise the main concepts of importance to the glass manufacturing process. Each of the major classifications of glass-melting technology in today's US glass industry is detailed below.

A.1. Glass quality improvement

Glass quality can be affected by impurities in raw materials or by inadequate batch preparation (weighting, mixing, etc.). Furnace design and/or operation directly impact the glass quality, which is defined by quantified values of physical properties, including color, seed/blister counts, and homogeneity. Measurements taken by spectrophotometers can quantify the amount of light transmission throughout the visible spectrum, and in turn give numeric representations of color. Gaseous inclusions are categorized by size and location in production and are most typically quantified by the number of seeds and blisters per unit of weight, or area. Chemical homogeneity can be measured by properties such as index of refraction, temperature versus viscosity, coefficient of thermal expansion (contraction), or presence of foreign matter (non-glass).

Glass melting has traditionally relied on a single melting chamber where the fusion process occurs through heating of solids, dissolution of sand grain, and refining of gaseous inclusions. The quality of the glass is determined by variables and compromises such as melting production rates, energy and temperature reduction. Changes in a furnace configuration can favorably impact glass quality. Evolutions in glass melting technology have greatly improved glass quality in recent decades by increasing glass depth; upgrading refractories; improving combustion and heat transfer conditions; implementing supplemental boosting, bubbling and stirring devices; and improving sensors, instrumentation and process control.

A.2. Manufacturing flexibility

Placed within a manufacturing facility, a glass melting system is connected to downstream product forming, finishing, selecting, and packaging equipment. A costly capital investment, the furnace refractory lining can operate continuously for five to 14 years while other structural components may serve for decades. Within the operating lifetime of a furnace, a variety of business changes can challenge the flexibility of a melting unit. A number of operating variables must be met within the lifetime of a furnace.

• *Color changes*

The color of glass being produced might be changed for containers, float glass or tableware. Whether using either a drain and fill or on-the-fly procedure, non-productive periods result. Size and configurations of the furnace can influence productivity during color changes.

• *Glass Chemistry*

Glass properties are dictated by the glass chemistry, and the raw material sources of oxides can impact furnace performance. Selection of refractories to optimize melting economics occurs at the time of original construction, but changes in glass chemistry can affect furnace life or glass quality variables.

•*Recycled cullet*

Container and fiberglass insulation industries have increasingly used recycled glass cullet. Handling and melting of cullet require changes in equipment and operating techniques. Large inventories of cullet are maintained on-site so small changes in recycling content in existing melter configurations do not disrupt glass quality or melting stability efficiencies.

• *Changes in pull rate*

Product size, forming techniques, and business (sales) conditions often require that a furnace expand the range of glass outputs. Many furnaces have multiple forming lines that accept the glass. They may be varied or idled for a variety of reasons. Furnace wear is dependent on time. When a furnace is in soak (zero pull) for any period of time, the wear on the refractory lining is noticeably nearly equal to high pull conditions. The glass moves and circulates both ways through the throat and wear is continuous, even when the production machine is pulled. No pull other than bottom taps, and maybe a small stream at the orifice occurs.

With regard to energy consumption, glass furnaces use an enormous amount of energy just to stay hot. A color TV furnace squanders half the total energy in keeping the crown, flux and regenerators hot. A massive amount of the refractories are at elevated temperatures. The heat required to reach those temperatures can be calculated as mass times heat capacity and temperature difference. In addition, the heat loss of, at best, 200 Btu/sq.ft. to over 1000 Btu per sq. ft. for crowns, up to 3000 sq.ft. crowns for large TV and float furnaces, and higher for bottom and flux and all the breast walls, port walls and regenerator walls, results in substantial heat loss. The water cooled throats or air cooling on walls and throats and heat loss through electrodes (at least 10 times the walls with water cooling possibly 100 times the walls, must also be factored in.

Furthermore, if product demand is elastic, rather than all you make can be sold, there is no optimum pull rate. As pull rate increases, the life of the furnace decreases and down time for repair must be considered, as well as cost of repair.

• *Product quality*

A variety of products with different quality levels can be produced from a single furnace. Flat glass for picture frame production has a lower standard than mirror glass. Cosmetic, tabletop condiment jars and candleholders can all be produced on the same furnace to different standards. Bushing-drawn fiberglass has different glass quality requirements for chopped strand compared to woven product.

• *Changes in product lines or forming technology*
Within the refractory lifetime of a glass-melting furnace, forming technology is often implemented on downstream production lines, often requiring different pull rates or delivery temperatures.

• *Melting fuel curtailment or substitution*
Seasonal supply of fuel can vary, resulting in curtailment of natural gas and the use of standby fuels (propane, distillate or residual oils, etc.) and the need to accommodate the melter configuration.

Flexibility of a furnace can be affected by size, but larger melters are usually more energy efficient. Furnaces that can be easily idled during business cycles may experience shorter refractory life due to damage from continuous heating and cooling. The Pouchet type, all-electric furnace has significant flexibility, but is an example of a smaller melter that requires lower capital investment with higher operating costs. Devices that separate the melting of cullet from raw material batch, such as the Seg-Melt concept, allow other compromises not possible in conventional furnaces.

A.3. Raw material oxide source selection
To meet service and fabrication specifications, glass products require a number of physical properties. The oxide chemistry of the glass being produced determines all of these properties. In turn, the raw material source of the glass oxide determines the glass chemistry. Raw material sources can be manipulated to produce the same, or similar, glass chemistry. For example, Al_2O_3 can be obtained from felspathic minerals, recycled blast furnace slag (calumite), aluminum hydroxide or clay. Alternatively, melting configuration can accommodate the physical nature and interaction in the glass fusion process of different raw materials.

The same glass product can be produced by altering the glass chemistry, requiring the use of new raw materials or eliminating existing ones. The substitution of lithium (LiO_2) for other alkalis (Na_2O, K_2O) can be justified on the basis of furnace melting performance. One fiber E-Glass producer removed B_2O_3 from the glass formulation, which impacted the furnace's melting and refractory requirements.

A.4. Raw material beneficiation
The oxides required to produce a desired glass chemistry most typically come from natural industrial minerals. The material can be mined and sized in a few steps. Producers must take a number of steps to improve the quality of the minerals and simultaneously influence melting performance. Refractory mineral contaminants are removed with froth flotation methods rather than dissolved by excessive melter temperatures. Grinding sand into a fine particle size has been used successfully to melt difficult glass (low-alkali) compositions.

Prereaction (or calcination) of limestone has been used for many years to drive off CO_2 prior to use in glass furnaces. This allows the glass furnace to obtain higher pull rates and better glass seed quality. Recently, synthetic alkaline earth silicates (diopsite, wollastonite) have been produced by prereactions with silica and lime. Used in existing furnaces, they can increase throughput by approximately 15 percent with no additional energy consumption. However, this material is often unavailable or costly.

A.5. Recycled cullet use

Increased use of post-consumer recycled glass has been a priority of the glass industry. Because of differences in melting properties of the cullet, alternate furnace configurations or cullet processing may benefit the performance of glass melting systems. The recycled glass is pulverized to granular size of the other raw materials being used. Non-glass contamination can be separated during the processing, or reduced to a size more easily melted. For glass cullet of varying bulk chemistry, a more homogeneous batch is obtained by matching the size of the cullet to the other raw materials.

Furnace configuration changes may allow more flexibility and optimization of the glass melting process when using high levels of recycled cullet. A Seg-Melt concept has been proposed to melt cullet in a separate chamber, then the molten glass is combined alternately with glass melted from raw materials. Cullet inherently can be more easily preheated than batch. The Edmeston cullet preheater also captures exhaust dust for recycling.

A.6. Batch preparation/agglomeration

Batch wetting and handling systems have protected the homogeneity initially obtained in the batch mixer. Water wetting has improved pull-rate capabilities, reduced particulate emissions, and increased refractory life. Agglomeration by pelletizing or briquetting of batch will result in more dense grain-to-grain contact of batch ingredients, more rapid heat transfer, optimisation of the solid-state reaction phase of the glass fusion process of batch, and creation of a form more adaptable to preheating configurations.

Pelletizing the batch before charging the batch to the furnace will lead to increased melting rates and less carryover. However, pelletizing (making green pellets with 8–10 percent water in 8-15 mm size in a rotating pan and then drying the pellets) requires additional energy. Net energy savings can be obtained only when using the flue gases for drying and preheating the pellets. An increase of 10-percent pull rate in a special glass furnace has been reported when using cold pellets instead of normal batch.

A.7. Batch/cullet preheating (or pre-reacting)

Prior to charging into a glass-melting furnace, the raw material batch plus cullet can be preheated up to 932°F (500°C), which means that less energy has to be transferred in the furnace. Preheating of humid batch or cullet allows additional energy savings because the water evaporates outside of the furnace. When using preheated batch and cullet, the pull of the furnaces can be increased or the electric boosting can be decreased. This means extra cost savings because electricity is expensive, and when more glass can be pulled out of a furnace, cost per ton of molten glass will decrease.

The greatest energy savings can be obtained by increasing the pull at the same thermal load of the furnace. Then the wall-heat losses per ton of molten glass will also decrease because more glass will be melted in the same tank volume. Without increasing the pull or lowering the boosting capacity, lower furnace temperatures can be realized, thus increasing the furnace lifetime. However, temperatures cannot be reduced if the quality of the glass product is affected.

Since the mid-1980s, preheaters for batch, cullet or mixed batch plus cullet have been introduced for use in the glass industry. Temperatures of 482–932˚F (250–500˚C) and energy savings of 12-18 percent for batch/cullet preheating have been realized.

Of the 13 batch/cullet preheaters installed worldwide to date, nine operate in Germany. An indirect cullet plus batch preheater system has been applied in some container glass furnaces by Zippe in Germany, Switzerland and the Netherlands. In these installations, flue gases and the batch mixture are separated by

steel walls, minimizing pressure losses of the exhausting gases but not capturing particulate or acid gases of the batch.

In some preheater installations, cullet is in direct contact with flue gases that flow from the recuperator into the preheater or between the flue gas and the cullet-batch mixture. In a counter-flow configuration of the batch preheater, 20 percent energy savings are possible depending on the heat content of the flue gases after the recuperator or regenerator.

A raining bed counter flow falling batch, bounces off 45-degree plates, through the exhaust stream. A cyclone at the top captures fines that are reintroduced with the preheated cullet and batch. A direct batch/cullet preheating system (E-Batch) incorporates direct heat transfer from the exhausting gases and electrostatic capture of fine particulate. The particulate then falls into the batch and is directly recycled with the preheated batch. Some configurations could also have acid gases be captured by batch ingredients (such as SO_2 by sodium carbonate).

Adoption of batch/cullet preheating systems has been limited. Some units have experienced operating difficulties that have imposed additional labor and maintenance costs. Other concerns include the following:

• *Batch dust carryover*. The direct contact between hot exhaust gases and the batch more effectively increases heat transfer, but fine particles can be entrained by the gases exiting the device.
• *Material pluggage.* Batch moisture, cullet size variability, and other factors have required levels of intervention labor, which is unacceptable for operations attempting to reduce manning.
• *Size of mechanism.* For the most effective systems, storage capacities of up to 24 h of batch requirements have been designed, but usually cannot be fit into the space available for retrofits.
• *Structural heat losses*. Some systems have been installed as retrofits with less than optimal configurations. The conveying of hot batch/cullet from some devices to the batch chargers has resulted in high heat losses.
• *Dry batch melting.* Soda-lime producers have enjoyed significant benefits from wetted batch for many years. These include longer refractory life, lower particulate emissions and improved glass homogeneity. Reverting back to a dry-batch charge may require new furnace configurations, alternative charging equipment, and different firing practices.

A.8. Enhanced heat transfer

The glass fusion process is driven by elevating the temperature of the raw material batch ingredients. The temperature of the molten glass must be managed to drive convection currents. Both of these factors are satisfied by transferring energy from a fossil fuel or electrical heating source. In combustion systems, the hydrocarbon fuel oxidizes into chemical energy that produces high-temperature gas and radiating intermediate combustion reaction products. Transfer of that heat from the flame to the melting process can be enhanced by convective or radiative means. To optimize spatial configurations of the combustion process, changes to the flame characteristic, such as luminosity, and configuring the heating sources relative to the melt are important.

Modifications to combustion equipment for generating soot in combustion flames are needed for both air and oxygen combustion. This could be a very significant issue in the future for hydrogen combustion. A convective glass melter recently developed by BOC directly impacts the melt with roof-mounted burners to increase heat transfer and obtain higher production rates. This technology retrofit replaces a portion of more conventional firing configurations that rely on radiant heat transfer.

Technology for direct heating within the molten glass can be achieved when an electrical current is driven through the resistant molten glass to release Joulian heat. Alternatively, microwave, inductive or plasma heating systems might be used to heat molten glass directly. However, these techniques require research and testing to become viable systems.

A.9. Waste heat recovery

Hot products of combustion gases leave the melters of fossil fuel furnaces. Efficiency of combustion-based furnaces can be measured by how cold the exhaust gases are in the exhaust stack. Some enthalpy energy from those gases can be recovered by recuperator or regenerator systems, and this energy returned to the melter by preheating the combustion air. This method allows higher operating temperatures with increased melting rates and improved glass quality.

With no heat recovery, exhaust temperatures of a furnace exceed 2400˚F (1315˚vC). With recuperators, exhaust temperatures exceed 1800°F (982°C). With regenerators, exhaust temperatures exceed 600–1000°F (316–538°C). Exhaust gases have always been considered for waste heat recovery. Steam boilers to generate electricity are an alternative method used in Germany by Heye Glas. Use of gas reformers, or thermochemical recuperation, by other industries is a concept that might be adaptable to glass furnaces.

The most advantageous use of furnace exhaust heat seems to be for preheating the batch and/or cullet charged into the furnace. Configurations to capture the exhaust heat for reuse that are cost effective and operator use friendly need to be developed.

A.10. Fusion (sand solution) process

Final dissolution of more refractory raw material components (sand, feldspathic, chromite colorants, etc., is one of the rate-limiting components of the glass fusion process. Historically, this process has been accomplished by either extended time in the furnace or higher operating temperatures. As modern refractories reach practical limits for their operating temperatures and demands for throughput increase, alternate processes are needed.

Researchers have identified the need to develop a driven system to accelerate the rate of solution of batch components as well as remove evolving gases from the melt. Shear forces may be increased mechanically by physical stirrers or by changing the heating process via such electrically based means as microwave or plasma. High-speed stirrers, bubblers, or submerged combustion all have technical merit to mechanically agitate a glass melt.

A.11. Zonal separation

Glass manufacturers recognize the need to optimize the steps to convert raw materials to final molten glass ready for forming. Within a single chamber, traditional melters must heat solids, create fusion, refine the melt, and condition the molten glass. By separating each step into distinct chambers or zones within multiple-duty devices, each process can be intensified and optimized. Residence time for each step can be reduced, and less interference will occur between adjacent steps.

A.12. Refining (seed removal)

Removal of gaseous inclusions (seeds) from the glass is another rate-limiting step. Current technology uses chemical, thermal and physical means to refine a glass melt. Each has drawbacks. Chemical refining increases particulate emissions or causes other environmental problems. Thermal refining uses more energy and exposes other components of the melter exposed to temperatures that reduce useful life. Reducing glass depth, as by using a shelf refiner, shortens refractory life and causes refractory defects to enter the melt.

Innovative refining concepts include using centrifugal forces, bubbling with alternate gases, and exposing the unrefined glass to sub-atmospheric pressures. The last concept has promise for shortening refining time, lowering energy consumption, and using smaller devices.

A.13. Chemical and thermal conditioning

A product-forming operation produces a saleable glass product downstream of all glass melting devices. Each forming method requires that the glass meet requirements for thermal and chemical homogeneity. Existing devices usually involve large chambers with methods for combining controlled heating and cooling, optimized for a relatively narrow range of pull rates or entrance temperatures.

Smaller, more flexible processes, including mechanical stirring and most recently microwave heating, have been tried. Any new melting system must satisfy present as well as future requirements of forming technologies and higher standards for glass quality.

A.14. Process controls (sensors, analytical/predictive, process analysis and control)

A limited number of sensors are available to provide meaningful measurements to control the melting process. Currently, sensors are available for melting systems to control temperatures (glass, refractory and atmospheric); pressures (furnace atmosphere pressure at the crown and at the glass level, fuel-oil and gas pressure, fan air and oxygen pressure; flow rates [of combustion reactants or combustion components in preferably mass units and glass flow]); flow rates (glass, combustion components); inventories (storage bins and molten glass in process chambers); selective chemical concentrations (glass redox, combustion atmosphere); and air emissions (NO_x, SO_x, CO and particulate).

Input data from sensors are essential to controlling the overall process. Advances in information presentation and control logic have improved energy efficiency, glass quality, furnace life, and productivity. New melting systems that incorporate faster, more dynamic processes will require more advanced sensors and more intelligent process controls.

Technology is emerging for new sensors that measure viscosity real time (S.K. Sundaram); vision systems that monitor and alarm if batch coverage changes or indicates a short circuiting situation; correct combustion; or act as smart thermocouples

A.15. Environmental compliance

Traditional glass melting furnaces must comply with environmental regulations. Air emission pollutants from fossil fuel furnaces include NO_x, SO_x, particulate, CO, halides and heavy metals. Some add-on technologies can curtail emission rates but increase cost and add no product value. Process revisions show compliance but are preferred even though they add cost because the capital investment is typically lower and may improve product quality. For example, combustion modifications to reduce NO_x are preferred over a chemical scrubber. All-electric melting eliminates most environmental pollutants. During furnace rebuilds, some refuse refractory materials must meet solid waste disposal requirements. Changes in refractory practices, such as elimination of chrome magnesite, have reduced disposal costs for regenerative furnaces.

New innovative melting systems should incorporate a means to reduce emissions. For example, the application of sub-atmospheric refining can reduce or eliminate the use of sulphates, which contribute to SO_x and particulate emissions.

A.16. Lower capital cost

Systems that can meet expectations for glass quality, energy efficiency of operations, environmental emission rates, and production yields will be evaluated in light of capital investment cost. Current melting technology requires a significant capital investment per unit of glass production, limiting industry growth

and diverting funds from R&D and other manufacturing improvements. Some technologies accept higher operating costs to minimize the capital investment capital in the furnace, for example the small Pouchet electric melters. Waste heat recovery technology currently involves capital investment that is often greater than the potential energy savings.

A.17. Lower operating cost
Costs for glass melting include operating labor, primary melting energy, secondary melting energy for air and water cooling pumps and blowers, and maintenance labor and material, as well as the cost of lost production during rebuilds to replace worn refractory linings. Melting energy and batch raw material costs represent over 75 percent of the operating costs for melting glass. Energy efficiency and use of less-expensive raw materials can have the greatest impact.

A.18. Lower environmental compliance costs
Compliance with new environmental regulations continues to burden glass manufacturers financially, requiring purchase of add-on devices, process modifications to the existing unit, or total unit replacement. To comply, manufacturers encounter costs for capital investment, operating cost penalties (energy, production or inefficiencies), monitoring equipment, labor and maintenance costs. Cost analysis of any alternative melting system must include the cost of environmental compliance along with capital and operating costs.

A.19. All-electric melter
Technology applicable to all-electric melting, but not to fossil fuel furnaces.

A.20. Total oxygen- and fuel-fired furnace
Technology applicable to fossil fuel furnaces using 100% oxygen to combust the fuel without air. It does not apply to all-electric melting.

A.21. Combination fuel and electric furnace
Technologies applicable to mixed-energy melting systems.

A.22. Can apply to the general glass industry
Technology not limited to a single segment of the glass industry, but potentially applicable to any glass melting system.

Appendix A1 Categorization of Literature

Literature Reviewed and Categorized, July–September 2002

Categories developed to characterize the literature and patents for glass science and engineering for reference purposes.
Include technical data (1-15), financial/economic data (16-18), applications (19-22).

Item	Category
	TECHNICAL
1	Glass Quality Improvement
2	Manufacturing Flexibility
3	Raw Material Oxide Source Selection
4	Raw Material Beneficiation
5	Recycled Cullet Use
6	Batch preparation/Agglomeration
7	Batch/Cullet Preheating (or Pre-reacting)
8	Enhanced Heat Transfer
9	Waste Heat Recovery
10	Fusion (Sand Solution) Process
11	Zonal Separation
12	Refining (Seed Removal)
13	Chemical and Thermal Conditioning
14	Process Controls (Sensors, Analytical/Predictive, Process Analysis and Control)
15	Environmental Compliance
	FINANCIAL/ECONOMIC
16	Lower Capital Cost
17	Lower Operating Cost
18	Lower Environmental Compliance Cost
	APPLICATIONS
19	All-Electric Melter
20	Total Oxygen and Fuel-Fired Furnace
21	Combination Fuel and Electric Furnace
22	Can Apply to the General Glass Industry

Author/title/year	1	2	3	4	5	6	7	8	9	10	11	12	13	14	15	16	17	18	19	20	21	22	Company Affiliate	Recommend second look?	Comments by Walt Scott
Ahmed, A.A. and Abbas, A.F. Does Blast-Furnace Slag Improve Glassmaking? *Glass Ind.*, **65**[12] 15-8 (1984) 1984			X	X				X									X								Well-known info
Alexander, J.C. Electrostatic Batch Preheating Technology: E-Batch Ceram.Eng.Sci.proc., 22[1] 37-53 (2001)							X	X	X								X	X				X		Yes	Combined benefits of preheat and environmental
Alexander, J.M. and Lazet, F.J. Directed-Flow, Thin-Layer Glass Fusion Process *Ceram.Eng.Sci.Proc.,* **6**[3-4] 133-141(1985)			X	X		X	X			X	X						X						P. Q.	Yes	Briquetting; low-temperature melt
Alexandrov High-frequency Melting of Glasses R_2O_3 - Al_2O_3 - SiO_2 (R - Sc, Y, La, Er) 1977		X																							
Alexandrov Obtaining (High-temperature) Materials by Method of Direct High-frequency Melting in Low-temperature Container) 1978		X						X																	
Ambartsumyan, A.G., Akopyan,G.G. and Kostanyan, K.A. Glass Melting in an Electric Direct-Heated Skull Furnace *Glass Ceram.* **54**[5/6] 139-140 (1997)										X														Yes	Ideas — for S88-5 glass
Anon The Direct Heating Furnace “Higher-Melter” Is a New Conception of Melting Glass Effectively. 1999		X						X							X										
Anon SORG: Technology Experience Gained through Melting Glass in Efficient Furnaces 2000												X	X												
Anon Turning Up the Heat in All-Electric Glass Melting *Glass (London),* **78**[9] 276 (2001)										X							X		X				ElectroGls	No	Conventional electrode applications
Aphanahsyeva Hydrothermal Technique of Batch Preparation 1977			X			X	X																		

Author/title/year	1	2	3	4	5	6	7	8	9	10	11	12	13	14	15	16	17	18	19	20	21	22	Company Affiliate	Recommend second look?	Comments by Walt Scott
Aphanahsyeva Infra-red Investigation of Processes of Preparing Granulated Hydrothermal and Conventional Batches 1987							X																		
Argent, R.D. Segmented Furnaces Slash Glass Melting Costs Ceram.Ind., 132[4] 45 (1989)																									
Argent, R.D. Furnace Designed for High Cullet Use *Glass Ind.,* **71**[4] 35 (1990)																									
Argent, R.D. Return of the Segmented Melting System *Glass*, **71**[10] 393 (1994)								X		X	X						X					X	Fraz.Smp	Yes	Separate cullet and batch melting
Artamohnov Systems of Controlling the Thermal Canal Regime and Working Chamber of a Glass Furnace 1999														X											
Ashfield, A.W.F., Glass Furnace Design in 1978 *J.Can.Ceram.Soc.,* **47**[1] 31-4 (1978)																									
Bahm, W. Promotion of Innovative Energy Technologies in the Glass Industry by the European Commission *Glastech.Ber.Glass Sci.Technol.,* **68**[9] 293-6 (1995)																								Yes	Thermic programs in Europe
Balta, P., Radu, D., and Spurcaciu. C. Influence of the Retention Time on the Energy Expense by Glass Melting *XIV Int.Congr.Glass-Coll.Pap.,* **3** 16-22 (1986)																							Bucharest	Yes	Study of energy and retention times
Barton, J.L. Innovation in Glass Melting *Glass Technol.,* **34**[5] 170-7 (1993)										X	X	X	X	X	X	X	X						St. Gobain	Yes	Treatise on progress in glass melting — must read
Beerkens, R.G.C., and Muysenberg, H.P.H. Comparative Study on Energy-Saving Technologies for Glass Furnaces *Glastech. Ber.,* **65**[8] 216-24 (1992)																									
Beerkens, R.G.C., Faber, A.J., Muysenberg, H.P.H., and Simonis, F. Simulation Optimises Glass Melting Process *Schott Inf.,* **82** 10-1 (1997)															X		X	X					TNO	Yes	Comprehensive model and applications

Author/title/year	1	2	3	4	5	6	7	8	9	10	11	12	13	14	15	16	17	18	19	20	21	22	Company Affiliate	Recommend second look?	Comments by Walt Scott
Belov, D.N., Maksakova, L.M., and Orlov, V.G. Automated Intermittent Gas-Fired Furnace [for Glassmelting] *Glass Ceram. (Eng. Trans.),* **37**[12] 624-5 (1980)																									
Bender, D.J., Hnat, J.G., and Litka, A.F. Advanced Glass Melter Research Continues to Make Progress *Glass Ind.*, **72**[4] 10 (1991)																									
Beutin and Leimkuihler Long-Term Experience with Nienburger Glas Batch Preheating Systems *Glass Ind.,* **72**[4] 10 (2000)							X	X							X		X	X				X	German	Yes	Nienberger batch preheater data and experience
Boen, M., Ladirat, M., Bonnal, M., and Delage, M.D. Induction Glass Melting in Cold Crucible *Ind. Ceram.*, **935** 176-7 (1998)										X													Ferro	Yes	Industrial scale
Boelens, S., Bolder, A., van Herten, R., and Rikken, A. Dutch Glassmaker's Survey of Energy Saving Technology *Glass (London),* **69**[10] 415-20 (1992)							X	X	X								X						Phillips	Yes	Several energy-saving technologies explored
Boldyhrev, R.A. Efficiency of Preheating Glass Batch 1987							X				X														
Bondariev Experiments in High-temperature Glass Manufacture for Producing Sheet Glasses 1980										X		X	X												
Bondariev The Present State and Prospects of Cyclone Glass Melting 1974								X																	
Bondariev Technical Progress in Technology of Preparing Glass Batch 1980	X					X								X											
Boussant-Roux, Y., Zanoli, A., and Naturel, C. Enhancement of Heat Transfer in Regenerators *Glass Prod. Technol. Int.,* 63-5 (1994)								X	X								X						SEPR	No	Cruciform checker applications
Brown, T. Electric Melting — Batch Blanket Technology *Glass Prod. Technol. Int.,* 65-7 (1993)						X	X			X									X				Eurofusion	No	Conventional cold top melter

Author/title/year	1	2	3	4	5	6	7	8	9	10	11	12	13	14	15	16	17	18	19	20	21	22	Company affiliate	Recommend second look?	Comments by Walt Scott
Browning, R., and Nabors, J. Regenerative Oxygen Heat Recovery for Improved Oxy-Fuel Glass Melter Efficiency *Ceram. Eng. Sci. Proc.,* **18**[1] 251-65 (1997)									X								X						MG Ind	Yes	Oxygen preheat systems and advantages
Buhdov Intensification of Manufacturing Methods is the Principal Way to Make Production More Effective 1975								X																	
Byburt Obtaining Glass from Gels by Low-temperature Synthesis 1982							X																		
Cable, M.J. Possibilities of Progress in Glassmelting J. Non-Cryst. Solids, 73[1-3] 451-61 (1985)																							UnivShef	Yes	Revolutionary improvements in melting unlikely'
Cable, M.J. Challenge to Improve Large-Scale Glassmelting *Silikaty (Prague),* **30**[2] 155-68 (1986)																							UnivShef	Yes	Wide-ranging article; possible ideas
Cable, M.J. Century of Developments in Glassmelting Research *J. Am. Ceram. Soc.,* **81**[5] 1083-94 (1998)																							UnivShef	Yes	Wide-ranging article; possible ideas
Cable, M., and Siddiqui, M. Replacement of Soda Ash by Caustic Soda in Laboratory Glass Melting Trials *Glass Technol.*, **2**1[4] 193-8 (1980)																									
Carroll, H.R., and Angelo, J.J. Adding Lithium Can Improve Melting-Forming Performance *Glass Ind.,* **64**[11] 14-16 (1983)																									
Carvalho, M.G. and Nogueira, M. Improvement of Energy Efficiency in Glass-Melting Furnaces, Cement Kilns and Baking Ovens *Appl. Therm. Eng.*, **17**[8/10] 921 (1997)																									
Cerchez, M., Elena, T., and Spurcaciu, C. Kinetic Assessment of the Raw Materials Glass Batch Reactivity When Using Melting Acids or Pellets Sprechsaal, 118[9] 755-6, 8 (1985)			X	X		X		X									X						Rumania	Yes	Future batching possibilities

Author/title/year	1	2	3	4	5	6	7	8	9	10	11	12	13	14	15	16	17	18	19	20	21	22	Company affiliate	Recommend second look?	Comments by Walt Scott
Chapman, C. State-of-the-Art of Waste Glass Melters pp. 485-93 in Ceramic Transactions **29**, *Advances in Fusion and Processing of Glass*, ed., Varshneya, A.K., Bickford, D.F., Bihuniak, P. American Ceramic Society, Westerville, OH 1993										X					X						X	X	Battelle	Yes	Several melting technologies for waste vitrification
Choubinidze Granulating of Sodium Silicate Batch 1987						X																			
Choubinidze Main Directions in Creating of Novel Glass Manufacture Equipment 1980						X		X																	
Choubinidze Melt Motion in Reception Bay of Cyclone Furnace 1980														X											
Clark, T.P. Glass Furnace Direct Coal Firing *Can. Clay Ceram. Q.*, **49**[2] 8, 11 (1976)								X									X						Inex	Yes	Ideas for use of coal to fire glass
Conradt, R. Some Fundamental Aspects of the Relation between Pull Rate and Energy Consumption of Glass Furnaces *Int. Glass J.,* **20**[108] 22-6 (2000)	X													X			X					X	GR - Univ	Yes	Practical look at furnace Operations vs quality/yields
Cozzi, C., Blanchet, P. and Segond, J. Design of a Glass Furnace Throat by Means of a Single Mathematical Model *Glass Technol.,* **24**[2] 62-6 (1983)																									
Di Bello, P.M. Time to Rethink Batch Prereactions Glass (London), 69[3] 113-4 (1992)						X	X	X														X	Ansac	Yes	Prereaction occuring in preheated batch
Ducharme, R., Scarfe, F., Kapadia, P., and Dowden, J. The Induction Melting of Glass *J. Phys. D: Appl. Phys.*, **24**[5] 658-63(6) (1991)										X									X				England	Yes	Technical look at induction heating
Ehrig, R., Wiegand, J., and Neubauer, E. Five Years of Operational Experience with the Sorg LoNOx Melter *Glastech. Ber. Glass Sci. and Technol.,* **68**[2] 73-8 (1995)								X									X	X					Sorg	Yes	LoNOx Melter results and rebuild plans

Author/title/year	1	2	3	4	5	6	7	8	9	10	11	12	13	14	15	16	17	18	19	20	21	22	Company affiliate	Recommend second look?	Comments by Walt Scott
Enneking, C.Q.M., Beerkens, R., and Faber, A.J. Glass Melting from Cullet-Rich Batches *Glass Ind.,* **73**[8] 18-21 (1992)					X			X									X	X							Advantages of 100% cullet; cullet preheat — emissions
Enninga, G/. Dytrych, K., and Barklage-Hilgefort, H. Practical Experience with Raw-Material Preheating on Glass Melting Furnaces *Glastech. Ber.,* **65**[7] 186-91 (1992)							X	X	X								X	X				X		Yes	Batch and cullet preheating after air preheat — temperature for EP
Faber, A.J., Beerkens, R.G.C., and de Waal, H. Thermal Behaviour of Glass Batch on Batch Heating Glastech. Ber., 65[7] 177-85 (1992)								X	X														Netherlds	Yes	Modeling shows effects of glass vs gas temps on melting
Fedorov, A.G., and Viskanta, R., Radiative Transfer in a Semitransparent Glass Foan Blanket *Phys. Chem. Glasses*, **41**[3]								X			X											X	Purdue	Yes	Model used to predict heat transfer through foam layers
Feduhlov Mechanism of Granulating Batch of Alkaline Alumoborosilicate Glasses Intended for Medicine 1978						X																			
Fletcher, J.V., and Gillman, D.C. Electric Melting System Update Ceram. Eng. Sci. Proc., 5[1-2] 96-100 (1984)										X							X		X				CRI, Eng	Yes	Experience with electrodes through the batch
Fokin, V.V., Kondrashov, V.I., Khovanskaya, N.A., and Zverev, Y.V. Operation of a Glass-Melting Furnace with a Heat-Insulated Melting Tank *Glass Ceram. (Eng. Trans.),* **57**[1/2] 43-4 (2000)	X							X				X			X		X					X	Saratov,In	Yes	Complete furnace insulation improves energy, quality, life
Gell, P.A.M. Furnace for Tomorrow in Operation Today *Glass Technol.,* **25**[3] 148-51 (1984)																									
Ghouloyan Technological Progress in Manufacturing Glass Containers 1980		X	X																						
Gridley, M. Philosophy, Design and Performance of Oxy-Fuel Furnaces *Am. Ceram. Soc. Bull.*, **76**[5] 53-7 (1997)								X									X	X		X			BallFoster	Yes	Treatise on benefits of converting to oxy-fuel firing

Author/title/year	1	2	3	4	5	6	7	8	9	10	11	12	13	14	15	16	17	18	19	20	21	22	Company affiliate	Recommend second look?	Comments by Walt Scott
Gushchin, S.N., Lisienko, V.G., Kutin, V.B., and Bodnar, P.N. Improvement of Operation of Open-Flame Glass-Melting Furnaces: A Review *Glass Ceram. (Eng. Trans.),* **58**[1/2] 39-42(4) (2001)																									
Hakes, S.C., New Approach to Melting Ultrahigh Quality Glasses Demanded by New Communications Technology *Int. Glass J.*, **21**[111] 26-8 (2001)	X						X		X							X							FIC	Yes	Melting of high quality, low-expansion glasses
Harper, T., Jones, D., Knighton, H., and Shea, J. Economics and Practicality of a Change to Coal as an Energy Source for Glassmaking Glass Technol., 23[1] 44-51 (1982)																									
Hayes, J.C. Laboratory Methods to Simulate Glass-Melting Processes pp.14.1-.8 in *Advances in the Fusion of Glass*, ed., D.F. Bickford, American Ceramic Society, Westerville, OH, (1988)																							Corning	Yes	Several ideas for use of coal
Herzog, J., and Settimo, R.J. Energy-Saving Cullet Preheater *Glass Ind.*, **73**[10] 36-9 (1992)					X		X	X									X						HFTeichmn	Yes	Counterflow layer filter cullet preheater
Howie, F.H., and Sayce, I.G. Plasma Heating of Refractory Melts *Rev. Int. Hautes Temp. Refract.*, **11**[3] 169-76 (1974)								X		X													English'	Yes	Centrifugal plasma furnace technology
Hrma, P. Glassmelting in 2004 *J. Non-Cryst. Solids,* **73**[1-3] 501-15 (1984)																									
Hull, J.D. Alternative Regenerator Systems for the 90s *Glass Ind.,* **74**[4] 18-20 (1993)																									
Il'inskii, V.A., Murav'ev, Y., and Pavlovskii, G.V. High-Productivity Glassmelting Tank Furnace with Drawing Channel *Glass Ceram. (Eng.Trans.),* **40**[1] 26-30 (1983)																									

Author/title/year	1	2	3	4	5	6	7	8	9	10	11	12	13	14	15	16	17	18	19	20	21	22	Company affiliate	Recommend second look?	Comments by Walt Scott
Kalyhgin Analysis and Peculiarities of Preparation and Processing of Compacted Batch in Industrial Conditions 1987						X																			
Kawachi, S., Kato, M., and Kawase, Y. Evaluation of Reaction Rate of Refining Agents *Glastech. Ber. Glass Sci. Techn.,* **72**[6] 182-7 (1999)	X											X											NipponEl		TV glass — simulate O_2 refining with gas analysis and model
Ketko New method of melting silicate enamels in rotary furnaces 1975								X					X												
Kharahzov Workflow Automation of Heating of Quartz-melting Induction Furnaces 1975								X						X											
Kiselev, V.I. and Pankova, N.A. Fining Glass in a Direct-Current Glass-Melting Furnace *Glass Ceram. (Eng. Trans.),* **41**[11-12] 527-31 (1984)	X											X					X						Steklo Cer	Yes	Thin layer refining
Kiselev, V.N., Strueva, T.M., and Denisova, S.S. Single-Flow Glassmelting Furnace *Glass Ceram. (Eng. Trans.),* **37**[9] 453-5 (1980)	X							X		X													Steklo Cer	Yes	Melt on inclined trough
Kislitsyn, B., Dovbnya, V., Chaus, L., Zhur'yari, N., and Zhivenkova, G. Methods of Preventing Incomplete Melting in Flat Glass *Glass Ceram. (Eng. Trans.),* **40**[5-6] 269-70 (1983)																									
Kitamura, N., Makihara, M., and Motokawa, M. Containerless Melting of Glass by Magnetic Levitation Method *Jpn. J. Appl. Phys.,* **39**[4A] L324-6 (2000)																									
Kiyan, V.I., Krivoruchko, P.A., and Atkarskaya, A.B. Internal Reserves for Enhancing the Efficiency of Glass-Melting Furnaces *Glass Ceram. (Eng. Trans.),* **56**[7/8] 241-4 (1999)	X							X				X					X					X	Steklo, Cer	Yes	Improve efficiency — model glass melt redox potentiel

Author/title/year	1	2	3	4	5	6	7	8	9	10	11	12	13	14	15	16	17	18	19	20	21	22	Company affiliate	Recommend second look?	Comments by Walt Scott
Klouzek, J., Lubomir, Nemec, and Ullrich, Jiri Modelling of the Refining Space Working under Reduced Pressure *Glastech. Ber. Glass Sci. Technol.,* **73**[11] 329-36 (2000)											X	X												Yes	Lead glass refining — model and experimental results
Knos, M.P. and Copley, G.J. Use of Microwave Radiation for the Processing of Glass *Glass Technol.,* **38**[3] 91-6 (1997)								X		X														Yes	Feasibility experiments
Kondrashov Prospects and Possiblities of Enhancing Manufacturing Method Efficacy and Engineering Factors of Glassceramics. (Prognoses) 2000														X											
Kostanyan Electric Melting of Lead Crystal 1976								X																	
Kostanyan, K.A. Electric Skull Furnaces for Making Glass [book] 1979		X						X						X											
Koster, J., and Schwarz, G. Direct Firing of Liquefied Petroleum Gas *Glass Prod. Technol. Int.* 59-61 (19										X							X						Hotw-Kos	Yes	Alternate fuel technology
Koucheryavyi Experience Gained through Running the Through Channel and Feeders at the Glass Works “Krasnoye Ekho” 2000											X			X											
Kouleva Factors Responsible for Foaming of Iron-containing Melts 1999	X							X																	
Koupfer Elastic Vibrations is a Factor of Intensifying the Processes of Forming Glasswork and Enhancing their Quality 1974	X																								
Koz'min, M.I., Babich, V.I., and Pankova, N.A. Experimental Furnace with Gas Combustion in the Melt and Thin-Layer Fining *Glass Ceram. (Eng. Trans.),* **31**[9-10] 623-5 (1974)	X									X	X						X						StekloCer	Yes	Submerged combustion with thin layer refiner

Author/title/year	1	2	3	4	5	6	7	8	9	10	11	12	13	14	15	16	17	18	19	20	21	22	Company affiliate	Recommend second look?	Comments by Walt Scott
Kozlov, A.S., Lisenenkova, S.B., Gusev, I.A., Mosolov, E.T., Miroshnikov, Y.M., and Tolstov, V.A.ydrodynamics of the Glass in a Regenerative Furnace *lass Ceram. (Eng. Trans.)* **41**[1-2] 51-6 (1984)																									
Kozlov, A.S., Shutnikova, L.P., Kotselko, R.S., and Dunduchenko, V.E. Energy Balance of Glass-Melting Furnaces *Glass Ceram. (Eng. Trans.),* **42**[12] 535-9 (1985)																									
Krause, W. Glass-Melting Strategies at Oberland Glass [Germany] *Glass Int.,* 49-51 June 1990	X									X	X						X						Germany	Yes	Use of waste heat boilers, EPs, electrodes
Kurkjian, C.R., and Prindle, W.R. Perspectives on the History of Glass Composition *J. Am. Ceram. Soc.*, **81**[4] 795-813 (1998)																								Yes	Many ideas — required reading
Kuzminov Fianites. Principles of Technology, Properties, Applications [book] 2001	X		X					X																	
Leimkuhler, J. Preheating of Raw Material for Glass Furnaces *Glass prod. Technol. Int.*, 31-2 (1991)							X	X	X						X		X	X					Germany	Yes	Preheating payback plus emissions reduction
Leimkuhler, J. Raw Material Preheating and Integrated Waste Heat Utilisation in the Glass Industry *Sprechsaal*, **125**[5] 292-8 (1992)							X	X	X						X		X	X					Germany	Yes	Batch preheat and waste heat bolier
Lingscheit, J.N. Laboratory Study of Calumite as a [Glass-] Melting and Fining Accelerant *J. Can. Ceram. Soc.*, **57**[2] 44-8 (1988)			X	X				X		X		X										X	Ford	Yes	Calumite tests and benefits conclusion
Lisovskaya , g.P., and Senatova, V.A. Model for Melting in a Glass Furnace *Glass Cream. (Eng. Trans.),* **47**[5-6] 205-9 (1991)																									
Lubitz, G. Oxy-Fuel Melter with Batch and Cullet Preheater *Glastech. Ber. Glass Sci. Technol.,* **72**[1] 21-4 (1999)	X				X		X	X	X						X		X	X				X	Germany	Yes	Results of batch and cullet preheat on oxy-fuel furnace
Mahlysheva Melting Selenium Ruby under Batch Layer 1978								X																	

Author/title/year	1	2	3	4	5	6	7	8	9	10	11	12	13	14	15	16	17	18	19	20	21	22	Company affiliate	Recommend second look?	Comments by Walt Scott
Mahmina Comparative Analysis between Ways of Manufacturing Conventional and Hydrothermal Batches Respectively in Furnace with Homogenizing Chambers 1982			X			X	X																		
Mahmina Preparation of Granulated Chemically-activated Batch 1986						X							X												
Manring, W.H. Oxidation-Reduction Influences on Glass Furnace Operations *J. Can. Ceram. Soc.*, **43**[2] 59-63 (1974)	X									X		X										X	FMC	Yes	Redox photo tests of melting, refining, and conclusions
Manring, W., and Davis, R. Controlling Redox Conditions in Glass Melting *Glass Ind.,* **59**[5] 13-6, 23, 4, 30 (1978)	X									X		X										X	FMC	Yes	Development of "chemical oxygen demand"
Margaryan Glass Formation in Systems SiO_2 - Nd_2O_3 and SiO_2 - La_2O_3 - K_2O 1971								X		X															
Markov Investigating Dependence of Granule Strength of Chemically-activated (Hydrothermal) Batch on Its Humidity 1987						X	X																		
Markov Investigating Peculiarities of Fining Fusion in Preparing Hydrothermal Batch 1987							X						X												
Markov Investigation of Behavior of Chemically-activated Hydrothermal Glass Milk Batch Being Heated 1987							X																		
Matej, J., and Stanek, J. Electric Glass Melting with Low-Frequency Current *Glastech. Ber.,* **61**[1] 1-4 (1988)																									
Mattocks, G.R. Use of Synthetic Air for Combustion in Regenerative Furnaces *Glass Technol.,* **39**[5] 148-56 (1998)								X	X	X														Yes	Unique system for NO_x reduction

Author/title/year	1	2	3	4	5	6	7	8	9	10	11	12	13	14	15	16	17	18	19	20	21	22	Company affiliate	Recommend second look?	Comments by Walt Scott
Matveyev Energotechnological Utilization of Glass Furnace Fuel 1991									X																
Maurach, H. Glass Furnaces in the Olden Time *Glass Ind.*, **16** 19-21 (1935)																								Yes	Ideas — Interesting history
McGrath, J.M. Preheating Cullet While Using the Cullet Bed as a Filter For Waste Gases in the Edmeston Heat Transfer/Emission Control System *Glass Technol.,* **37**[5] 146-50 (1996)					X		X	X							X		X	X						Yes	Cullet preheat and flue gas cleaner
McMahon, A., and Ding, M. Can Partial Conversion to Oxy-Fuel Combustion Be a Solution to Furnace Problems? *Glass Ind.,* **75**[13] 23-4 (1994)								X									X							No	Oxy-fuel use to resolve plugged checkers
McMeen Revising the Concepts on the Forehearth Dimensions 2000													X												
Meerman, W., van Rooy, T., and Voss, M. Continuous Skull-Melting of Glass *Philips Tech. Rev.*, **42**[3] 93-6 (1985)										X													Phillips	Yes	Unique skull melter with RF coil
Melkonyan Chemical Hydrothermal Synthesis of Active Combined Raw from Products of Processing Rocks. 1984			X	X			X																		
Melkonyan Enhancing Effectiveness of Manufacturing Methods of Melting Glass from Kanasite Raw 1973			X				X																		
Melkonyan Granulating of Crystal Compound Kanasit and Physical-chemical Properties of Granules 1976			X			X																			
Melkonyan Hydrothermal Method of Preparation of Complex Raw “Kanasit” from Rocks and Products of Processing Them [book] 1977			X			X	X																		

Author/title/year	1	2	3	4	5	6	7	8	9	10	11	12	13	14	15	16	17	18	19	20	21	22	Company affiliate	Recommend second look?	Comments by Walt Scott
Melkonyan Hydrothermal Technique of Preparing Composite Raw Material (Kanasit) for Manufacturing Glass 1979			X	X			X																		
Melkonyan A New Intensificator for Melting Silicate Glasses 1973			X				X																		
Melkonyan New Method of Applying Pearlite Rocks in Glass Manufacture 1971			X	X				X																	
Melkonyan Studying Certain Aspects of Kinetics of Interaction between Aluminosilicates and Alkalis in Aquatic Solutions and Investigation of Obtaining Certain Silicate Products by Treating Pearlite Rocks in Hydro-thermal Way 1965			X	X			X																		
Mikhaylova-Boghdanovskaya Forced Homogenization of Glass Mass in Melting Tanks of Ceaseless Working 1982													X												
Min'ko, N., Zaitsev Yu, S., Zaitseva, N., Bilinskii, R., and Shershnev Yu, M. Evaporation Cooling of Glass-Melting Furnaces (A Review) *Glass Ceram.,* **57**[5/6] 187-9 (2000)																	X					X	Steklo Cer	Yes	Benefits of evaporative cooling
Mirkin Granulating of Bacor Batch 1975						X																			
Moser, H. Economics of Batch and Cullet Preheating *Ceram. Eng. Sci. proc.,* **16**[2] 105-8 (1995)							X		X								X	X				X	Zippe	Yes	Indirect preheating
Motokawa, M. New Technology I: Melting Floating Glass (Magnetic Levitation) *Look Japan*, **46**[532] 30-1 (2000)										X									X				TohokuUn	Yes	Mag. lev. experiments generate glass spheres
Movsesyan Granulating and Briquetting Glass Batch from Yerevanit 1979						X																			

Author/title/year	1	2	3	4	5	6	7	8	9	10	11	12	13	14	15	16	17	18	19	20	21	22	Company affiliate	Recommend second look?	Comments by Walt Scott
Movsesyan Using Mathematical Statistics in Technology of Granulating Glass Batch 1980						X																			
Murray, R. The Melting of Glass by Electricity, A Bibliography NYS College of Ceramics, Alfred University, Alfred, NY (1962)																							Alfred	Yes	Complete listing of electric furnace patents up to 1962
Nebel, R. Application of the Fining Shelf to Furnace Melting Technology *Ceram. Eng. Sci. Proc.*, **22**[1] 21-6 (2001)	X										X	X	X				X						Sorg	Yes	Benefits of seperating melting and refining; refining shelf
Nebel, R. Refining Bank *Glass Ind.*, **82**[1] 17-20 (2001)	X										X	X					X					X	Sorg	Yes	Thin layer refining shelf
Nemec, L. Refining and Sand Dissolution in the Glassmelting Process *Ceram. –Silik.*, **36**[4] 221-31 (1992)																						X	Czech	Yes	Excellent treatise on glass making
Nemec, L. Energy Consumption in the Glass Melting Process Part 1. Theoretical Relations *Glastech. Ber. Glass Sci. Technol.*, **68**[1] 1-10 (1995)																									
Nemec, L. Energy Consumption in the Glass Melting Process Part 2. Results of Calculations *Glastech. Ber.*, **68**[2] 39-50 (1995)			X	X		X				X	X	X										X	Czech	Yes	Ideas
Nemec, L. and Lubas, J. Simple Model of Refining in Glass Melting Furnace with Vertical Flow and Covered Level *Ceram. –Silik.*, **37**[1] 35-42 (1993)												X							X				Czech		Accumulation of fining agents under batch; mass balance
Nemec, L. and Matej, J. Some New Aspects of Glass Melting *Sci. Prog.*, **79**[4] 261 (1996)										X	X	X					X						Czech	Yes	Process intensification; low-pressure refining
Nezhentsev Application of Induction Furnaces Equipped with (Low-temperature) Crucible for Manufactoring High-melting Glasses 1986								X																	

Author/title/year	1	2	3	4	5	6	7	8	9	10	11	12	13	14	15	16	17	18	19	20	21	22	Company affiliate	Recommend second look?	Comments by Walt Scott
Nezhentsev Manufacture of Optical Glasses in High-frequency Furnaces 1988	X							X																	
Nezhentsev, V.V., Khar'yuzov, V.A., and Zhilin, A.A. Melting Optical Glasses in High-Frequency Furnaces *Glass Ceram. (Eng. Trans.),* **45**[5] 182-5 (1988)																							Czech	Yes	Induction heating — advantages of high-frequency direct heating
Nisman Method of Preparing Glass Batch to Manufacture Container Glass 1975						X																			
Nordyke, J.S. Advances in Melting of Lead Glass pp. 53.1-.4 in *Advances in the Fusion of Glass*, ed., D.F. Bickford, American Ceramic Society, Westerville, OH, (1988)				X		X																	Consult'nt	Yes	Prereactions in glass batch
Panckohva Investigation of Melting Characteristics of Chemically-activated Batch 1987						X	X																		
Panckohva Main Scientific Directions in Study of Glass Mass Degassing 1980													X												
Panckohva Ways of Intensifying the Processes of Glass Melting and Enhancing Glass Mass Quality. 1974								X					X												
Pastor, A.A., and Dobrosavljevic, V. Melting of the Electron Glass *Phys. Rev. Lett*, **83**[22] 4642 (1999)																									
Pavloushkin Intensification of Melting Slag Glasses owing to Using Potassium Chloride 1973													X												
Pchelyakov, K.A. Thermohydrodynamic Methods for Accelerating the Glassmelting Processes *Glass Ceram. (Eng. Trans.),* **37[**5] 228-31 (1980)	X							X				X					X						Steklo, Cer	No	Conventional flat furnaces with electrodes

Author/title/year	1	2	3	4	5	6	7	8	9	10	11	12	13	14	15	16	17	18	19	20	21	22	Company affiliate	Recommend second look?	Comments by Walt Scott
Penberthy, L. Electric Furnace for Nuclear Waste Glass *Ceram. Eng. Sci. Proc.,* **5**[1-2] 87-91 (1984)										X								X					PenElectro	No	Glassification of nuclear waste
Peterson, S. 2001 Glass Industry Forecast *Glass Ind.*, **82**[1] 11-3 (2001)																							BOC	No	BOC's contributions
Petrovskii First Steps of Space Glass Manufacture 1983								X																	
Petrovskii Optical Technology in Space [book] 1984	X	X												X											
Phinkelshtain Some Properties of the Kanasite of Electron-tube Glass Composition and of Certain Glasses Made from It 1971			X	X				X																	
Pieper, H. Furnace Costs Compared for Nine Different Melters *Glass (London)*, **70**[1] 20-2 (1993)	X							X									X	X					Sorg	Yes - ideas	Comparisons — LoNox furnace and end fired furnaces
Pieper, H. Large End-Fired Furnaces with a Melting Area of 100 m^2 and More *Glastech. Ber., Glass Sci. Technol.*, **67**[3] 65-70 (1994)								X									X	X				X	Sorg	Yes - ideas	Barrier walls; optimized ports; cascade heat sys. for emisn.
Pike, W.G., Shea, J.J., and McCoy, L.R. Evolution of Float Glass Furnaces *Glass (London)*, **69**[2] 65-9 (1992)																							TECO	Yes - ideas	Treatise on float glass furnace evolutions
Pilkington, A. History of the Flat Glass Industry Is the Story of Manufacturing Processes *Glass Ind.*, **76**[8] 16-21 (1995)																							P. B.	No	Treatise on flat glass to present (1995)
Pollyak Intensfication of Glass Manufacture and New Methods of Melting Glass 1973								X					X												
Pollyak Study and Development of Furnaces of Novel Constructions 1980								X																	

Author/title/year	1	2	3	4	5	6	7	8	9	10	11	12	13	14	15	16	17	18	19	20	21	22	Company affiliate	Recommend second look?	Comments by Walt Scott
Popohva Utilization of Broken Glass as Raw Materials for Manufacturing Bottles and Food-preserving Glass Containers 1973					X																				
Portugal, J.V. and Pye, L.D. Plasma Melting of Selected Compositions in the Al_2O_3-ZrO_2-SiO_2 System p. 213 in Materials Science Research, Vol. 17, Emergent Process Methods for High Technology Ceramics. Ed., R.F. Davis, H. Palmour, and R. L. Porter. Plenum, New York, (1984)										X									X				Alfred	Yes - ideas	Plasma torch to melt unusual compositions
Pouz, Briquetting of Glass Batch 1978						X																			
Puccioni, F. and Zucconi, A. Improved Design of Continuous Glass Melting Furnaces *Glass Mach. Plants Accessories*, **13**[5] 73-8 (2000)	X	X								X	X	X					X				X	X	Glass Ser	Yes - ideas	Control of convection currents with electric boost system
Rabukhin Application of Alkaline Aluminosilicates Obtained by Treating Pearlite Rocks as Raw Materials for Ceramic and Glass Industry 1968			X	X			X																		
Rawson, H. Comments on "Use of Microwave Radiation in the Processing of Glass" by M. P. Knox and G. J. Copley *Glass Technol.* **38**[6] 219-20 (1997)								X		X														Yes	Reservations on advantages of microwave heating
Reynolds, M.C. Electric Furnace Design *Glass Technol.*, **23**[1] 38-43 (1982)																									
Reynolds, M.C. Electric Melting Evolution or Revolution *Int. Glass J.,* **21**[111] 23-5 (2001)	X	X								X							X						Penelectro	Yes	Treatise on the evolution of electric melting
Richards, R.S. Rapid Glass Melting and Refining System *Am. Ceram. Soc. Bull.*, **67**[11] 1802-5 (1988)																							Consultants	Yes	Treatise on mix melter and centrifugal refining

Author/title/year	1	2	3	4	5	6	7	8	9	10	11	12	13	14	15	16	17	18	19	20	21	22	Company affiliate	Recommend second look?	Comments by Walt Scott
Richards, R.S., and Jain, V. Rapid Stirred Melting of Simulated West Valley High Level Waste pp. 229-38 in Ceramic Transactions, Vol. 39, *Environmental and Waste Management Issues in the Ceramic Industry*, ed., G.B. Mellinger, American Ceramic Society, Westerville, OH (1994)										X													Stir-Melter	Yes	Glassification of radioactive wastes
Roberts, D. Vitrifix Process *Conf. Rec. – IAS Annu. Mtg.,* **22** 1032-50 (1987)											X				X				X				Vitrix Ltd	Yes	Asbestos destruction with "portable furnace"
Rokhlin Up-to-date Methods of Manufacturing Glass Containers 1974							X	X					X												
Ross Energy Benchmarking for the Glass Industry 1997																							Consultant	Yes	Detailed study of glass industry energy consumption
Ruiz, R., Wayman, S., Jurcik, B., Philippe, L., and Latrides, J.-Y. Oxy-Fuel Furnace Design Considerations Ceram. Eng. Sci. proc., 16[2] 179-89 (1995)																									
Ruslov, V.N. Improving the Fuel Efficiency of Glassmaking Furnaces *Glass Ceram. (Eng. Trans.),* **50**[5-6] 239-41 (1993)								X									X							Yes - ideas	Comparative analysis of several furnaces
Sahvina Study of Manufacture Characteristics of Granulated Hydrothermal Batch Prepared from Either Burned or Natural Dolomite 1984						X	X																		
Samokhvalov, V.S., Torlopov, A.A., Zub, M.P., Kravets, S.M., and Novoselov, V.E. Operating a Steam Superheater on a Glass-Melting Furnace *Glass Ceram. (Eng. Trans.),* **48**[9-10 479 (1991)									X								X							Yes - ideas	Results from steam superheater in flue

Author/title/year	1	2	3	4	5	6	7	8	9	10	11	12	13	14	15	16	17	18	19	20	21	22	Company affiliate	Recommend second look?	Comments by Walt Scott
Savina, I.M., Bespalov, V.P., Ya, Levitin L., and Popov, O.N. Effect of the Design of the Separating Unit on the Heat and Mass Transfer of the Glass Mass G*lass Ceram. (Eng. Trans.),* **46**[1-2] 16-9 (1989)																								No	Model of flat glass furnace waist design
Scarfe, F. Electric Melting — A Review *Glass Technol.*, **2**1[1] 37-50 (1980)																									
Schaeffer, H.A. Scientific and Technological Challenges of Industrial Glass Melting Solid State Ionics, 105 [1-4] 265-70 (1998)	X	X			X		X										X						German	Yes - ideas	Treatise on German glass industry; recycling
Schmalhorst, E. PLM's Success with Indirect Batch and Cullet Preheating *Glass (London),* **71**[1] 21-2 (1994)	X				X		X		X								X	X					German	Yes - ideas	Indirect cullet preheating; Batch and cullet - effects humidity
Scholz, U. Batch preheating with Simultaneous Nitric Oxide Reduction in a Container Glassworks *Ind. Ceram.,* **969** 208-14 (2001)							X	X							X			X					Netherlands	Yes - ideas	Preheat with low NO_x and particulates; power generation
Schroeder, R.W., Kwamya, J.D., Leone, P., and Barrickman, L. Batch and Cullet Preheating and Emissions Control on Oxy-Fuel Furnaces *Ceram. Eng. Sci. Proc.*, **21**[1] 207-19 (2000)															X		X	X		X					Batch and cullet preheat — results of test in New Jersey
Schulz, R.L., Fathi, Z., Clark, D.E., and Wicks, G.G. Microwave Processing of Simulated Nuclear Waste Glass pp. 451-8 in Ceramic Transactions, Vol. 21, *Microwaves: Theory & Applications in Materials Processing.* ed. D.E. Clark, F.D. Gac, and W.H. Sutton, American Ceramic Society, Westerville, OH (1991)										X									X				Univ.FLA	Yes - ideas	Microwave melting of radioactive frit
Schwalbe, F.G. Twenty Years of Progress in Glass Melting *Glass Ind.,* **21** 169-70, 202 (1940)																							TECO	No	Treatise on glass from 1920 to 1940
Senior, D. From Deep Refiner Technology to Mathematical Modelling *Glass (London),* **78**[3] 86-7 (2001)												X	X			X	X						Zedlec Eng	No	Forehearth design development via model and software

Author/title/year	1	2	3	4	5	6	7	8	9	10	11	12	13	14	15	16	17	18	19	20	21	22	Company affiliate	Recommend second look?	Comments by Walt Scott
Senkevich, N.A., and Khait, O.D. Glass Tank Furnaces with Two Production Basins for Melting Crystal Glass *Glass Ceram. (Eng. Trans.),* **31**[10] 730-3 (1974)										X													Lenigrade	No	Conventional
Seward, T.P. Some Aspects of Oxy-Fuel Glass Melting *Glass Technol.,* **38**[5] 150-1 (1997)																X	X	X		X				Yes	Oxy-fuel conversions — side effects and disadvantages
Shapovalova Technology of Manufacturing High-melting Glass Wares 1980								X																	
Shershnev, Y.M. New Equipment in the Glass-Melting Industry *Refract. Ind. Ceram.,* **40**[9/10] 414 (1999)																									
Shvorneva Behavior of Chemically-activated Glass Batch under Heating 1984			X				X																		
Sims, R. Small Revolution in Furnace Design *Glass (London),* **68**[10] 423-5 (1991)							X			X	X	X			X			X					German	Yes - ideas	Seperation of preheat, melting and refining
Sismey, C.J. Recuperators in the Glass Industry *Glass (London),* **64**[4] 149-50 (1987)									X															No	Conventional small furnaces
Smirnov Enhancing the Quality of Glass Raw and Batch 1974													X												
Smirnov Wetting of Glass Batch 1973			X				X																		
Smith, D.P. Secondary Regenerators Used in Glass Melting Furnaces *Glass Prod. Technol.*, 69-71 (1990)									X								X	X					Morgan En	No	Use of preformed checker shapes in secondary regen.
Snyder, W.J., Chamberland, , R.P., Steigman, F.N., and Hoyle, C.J. Economic Aspects of Preheating Batch and Cullet for Oxy-Fuel-Fired Furnaces *Ceram. Eng. Sci. Proc.*, **22**[1] 55-70 (2001)							X								X		X	X					Praxair	Yes - ideas	Benefits of preheating; raining bed — Praxair Pyrolyzer

Author/title/year	1	2	3	4	5	6	7	8	9	10	11	12	13	14	15	16	17	18	19	20	21	22	Company affiliate	Recommend second look?	Comments by Walt Scott
Sohbolev High-temperature Immobilization of Harmful Industrial Waste Products in Glass 1991															X										
Sohkolov Decreasing the Intensity of Polluting the Environment with Acid Waste Waters in Producing Lead Crystal 1998															X										
Sparidaens, A.J.C.M. Batch Pelletisation — The Key to Glass Quality Improvement *Glass Technol.,* **32**[5] 149-52 (1991)						X		X									X						Phillips	Yes	Advantages of pelletized batch
Spinosa and Ensminger Sonic Energy Reduces Energy Consumption during Melting 1987								X									X							Yes - ideas	
Stanek Problems in Electric Melting of Glass 1990																			X		X		Czech	Yes - ideas	Cold top conclusions — treatise
Stepenkohva Investigation of Preparation of Activated Sheet Glass Batch 1987			X				X																		
Streckahlov Main Approaches to Intensifying Gassmelting 1982								X																	
Streicher, Marin, Charon, and Borders Oscillating Combustion Technology Boosts Furnace Efficiency 2001								X		X							X	X					Air Liquide	Yes - ideas	Treatise on oxy combustion and applications
Sufre Study of Glass Manufacture in Furnace with Cyclone Melting Chamber 1984						X		X																	
Teisen Changing Criteria of Furnace Designs for the Container Industry and the Role of the Side Fired Recuperative Glass Melting Tank 1991								X									X						England	No	Treatise — includes coal gassification (1917)

Author/title/year	1	2	3	4	5	6	7	8	9	10	11	12	13	14	15	16	17	18	19	20	21	22	Company affiliate	Recommend second look?	Comments by Walt Scott
Tertyshnikov Determination of Optimal Pattern of Heat Consumption by Cyclone Glass Manufacture Set 1981								X																	
Tertyshnikov Study of Drying Granulated Batch 1982						X																			
Tertyshnikov Thermal and Technological Effectiveness 1986								X																	
Timopheyeva Sanitary Estimation of Applying Granulated Batch in Conditions of Anzhero-Sudzhensk Glass Works 1986															X										
Troyankin, Timofeeva, and Smirnov Cyclone Melting in Production of Heat-Resistant Stone Castings 1978										X													Steklo, Cer	Yes	Possible glass industry applications
Turton and Argent Are Cross-Fired, Multipass Regenerative Furnaces Cost Effective? 1989																									
Usohvich Intensifying the Engineering Procedures of Manufacturing Enamle Compositions 1975	X																								
Vander Molen, R.H., and Uhrmann, C.J. Staged Combustion Coal-Fired Glass Furnace *Glass Ind.,* **58**[1] 14-24 (1977)								X		X					X		X						AnchorHoc	Yes - ideas	Use of many different types of coal and coal firing0
Vargin (ed.) Enameling of Fabricated Metal Products [book] 1962		X						X						X											
Varuhzhanyan Refining the Technology of Processing Silicon Dioxide to Obtain Certain Materials for Fiber Optics 1998							X																		
Vepreva Controlling and Stabilizing the Oxidant-reduction Potential of Glass Mass (on the System of Vertical Glass Drawing) 1999														X											

Author/title/year	1	2	3	4	5	6	7	8	9	10	11	12	13	14	15	16	17	18	19	20	21	22	Company affiliate	Recommend second look?	Comments by Walt Scott
Vershihnina Study of Extrusion Method of Preparing Caustized Batch 1984						X																			
Viskanta and Wu Effect of Gas Percolation on Melting of Glass Batch 1984																									
Vityugin Thermo-granulating of Soda-containing Glass Batches without Cohesive Admixtures 1977						X																			
Warren, V.A. On Electric Melting *Glastek. Tidskr.,* **38**[1] 9-16 (1983)								X											X		X		Elemelt	Yes - ideas	Treatise with economic comparisons
Weissart, W.H. Preheating of Raw Material for Glass Furnaces *Glass Technol.,* **30**[6] 201-2 (1989)							X	X									X	X					Germany	Yes - ideas	Batch preheat via direct contact with flue gas
Wishnick, D. The Future of Glass Melting *Glass Int.,* **24**[3] 23-4 (2001)																									
Wu, Y., and Cooper, A.R. Thermodynamics and Kinetics of Batch and Cullet Preheat for Energy Savings and Removal of Air Pollutants *Trans. Indian Ceram. Soc.,* **50**[6] 145-50 (1991)							X	X	X								X	X					Case Inst	Yes - ideas	Preheat benefits and emissions reduction
Wu, Y., and Cooper, A.R. Batch and Cullet Preheating for Energy Savings and Removal of Air Pollutants *Ceram. Eng. Sci. Proc.,* **13**[3-4] 91-103 (1992)							X	X	X						X		X	X					Case	Yes	Various preheat techs; Benefits packed bed vs. fluidized
Yi, J.J.L., and Strutt, P.R. Glass Formation by Laser Melting pp. 49.1-.9 in *Advances in the Fusion of Glass.* Ed. D.F. Bickford. American Ceramic Society, Westerville, OH. (1988)								X		X	X												Univ. CT	Yes - ideas	Laser melting of refractory glasses
Yoshikawa, H., and Kawase, Y. Significance or Redox Reactions in Glass Refining Processes *Glastech. Ber. Glass Sci. Technol.,* **70**[2] 31-40 (1997)	X											X					X							Yes - ideas	Model to approximate bubble shrinkage — redox effects

Author/title/year	1	2	3	4	5	6	7	8	9	10	11	12	13	14	15	16	17	18	19	20	21	22	Company affiliate	Recommend second look?	Comments by Walt Scott
Zhilin, A.A., Zamyatin, A.N., and Shiff, V.K. Mathematical Modelling of Glass Melt Heat Exchange in a Cylindrical Induction Furnace, *Glass Ceram. (Eng. Trans.),* **51**[3] 122-7 (1994)										X	X													Yes - ideas	Cold crucible, high-frequency induction heating
Zhiqiang, Y., and Zhihao, Z. Basic Flow Pattern and Its Variation in Different Types of Glass Tank Furnaces *Glastech. Ber. Glass Sci. Technol.,* **70**[6] 165-72 (1997)																									
Zhivillo Influence of the Forces Operating in Ultrasonic Field on Accelerating the Process of Glass Degassing 1978													X												
Zippe, B.-H. Economics of Cullet Preheating *Glass Int.,* 8-9 (June 1992)					X		X										X					X	Germany	Yes - ideas	Benefits of cullet preheating determined
Zippe, B.-H., Reliable Batch and Cullet Preheater for Glass Furnaces *Glass Technol.,* **35**[2] 58-60 (1994)					X		X																Germany		Indirect preheating

Appendix A2 Categorization of Patents

Patents Reviewed and Categorized, July–September 2002

Categories developed to characterize the literature and patents for glass science and engineering for reference purposes
Include technical data (1-15), financial/economic data (16-18), applications (19-22).

Item	Category
	TECHNICAL
1	Glass Quality Improvement
2	Manufacturing Flexibility
3	Raw Material Oxide Source Selection
4	Raw Material Beneficiation
5	Recycled Cullet Use
6	Batch preparation/Agglomeration
7	Batch/Cullet Preheating (or Pre-reacting)
8	Enhanced Heat Transfer
9	Waste Heat Recovery
10	Fusion (Sand Solution) Process
11	Zonal Separation
12	Refining (Seed Removal)
13	Chemical and Thermal Conditioning
14	Process Controls (Sensors, Analytical/Predictive, Process Analysis and Control)
15	Environmental Compliance
	FINANCIAL/ECONOMIC
16	Lower Capital Cost
17	Lower Operating Cost
18	Lower Environmental Compliance Cost
	APPLICATIONS
19	All-Electric Melter
20	Total Oxygen and Fuel-Fired Furnace
21	Combination Fuel and Electric Furnace
22	Can Apply to the General Glass Industry

Patent no.	Title/inventor/date	1	2	3	4	5	6	7	8	9	10	11	12	13	14	15	16	17	18	19	20	21	22	Company affiliate	Recommend second look?	Comments by Walter Scott
1,863,708	Melting glass in a rotary furnace G. Zotos June 21, 1929		X							X	X							X						German		Inclined drum melter
1,885,722	Melting glass by passing an electric current through the material H. F. Hitner November 1, 1933										X	X												PPG	Yes	Electric
1,906,594	Melting glass by electric heating (with a high-frequency induction coil) H. F. Hitner May 2, 1933										X													PPG	Yes	Electric reduced wall wear
1,980,373	Rotary furnace for melting glass and associated apparatus suitable for tilting the furnace, etc. S. B. Bowman and F. C. Flint November 13, 1935										X							X						Hazel Atl.		Rotary kiln melter
2,127,087	Weir for use under molten glass in glass-making tanks V. Mulholland August 16, 1938										X							X						Hart. Emp		Furnace weir with gas cooling
2,330,343	Apparatus for fining molten glass by a "bubbling operation" J. G. Frantz September 28, 1943												X	X										PPG		Stirrer /bubbler
3,048,640	Melting and feeding heat-softenable mineral material, such as glass H. I. Glaser August 7, 1962										X	X	X	X										OCF		Marble melter
3,321,289	Rotatable current baffle in glass flow furnace R. Touvay May 23, 1967								X				X	X				X						St. Gobain		Graphite return flow baffle
3,811,859	Apparatus and method for electrolyically generating stirring bubbles in a glass melt F. M. Ernsberger May 21, 1974												X					X						PPG		Oxygen bubble generator — cathode/anode
3,938,976	Processes and apparatus for feeding material to a glass melting tank N. I. W. Walker February 17, 1976	X	X			X										X								PB-Float		
3,942,968	Method and apparatus for melting and subsequently refining glass H. Pieper March 9, 1976	X	X						X		X	X	X	X			X			X				Sorg	Yes	

Patent no.	Title/inventor/date	1	2	3	4	5	6	7	8	9	10	11	12	13	14	15	16	17	18	19	20	21	22	Company affiliate	Recommend second look?	Comments by Walter Scott
3,951,635	Method for rapidly melting and refining glass S. Rough, Robert R. April 20, 1976	X	X						X		X	X	X	X				X	X					O. I.		Centrifugal
3,967,943	Method of improving glass batch melting by use of water glass C. E. Seeley July 6, 1976	X		X	X		X									X		X						Anchor H.		Water glass
3,969,100	Method of pelletizing glass batch materials K. J. Kuna and J. P. Sowman July 13, 1976			X	X		X		X									X						Ford		Caustic soda for making pellets
3,979,197	Method of operating glass melting furnace M. L. Froberg September 7, 1976				X		X											X		X				OCF		Electric tank configuration
3,988,138	Method and apparatus for melting glass-making materials R. R. Rough October 26, 1976	X	X						X		X	X	X	X			X	X						O. I.		Electric stirrer; continuation of patent 3,951,635
3,989,497	Glass melting G. A. Dickinson and W. J. Rhodes November 2, 1976	X	X											X										P. B.		Flat glass waist cooler and stirrers
3,990,878	Glass melting apparatus T. J. Vasilievich, V. M. Smirnov, B. A. Sokolov, K. T. Bondarev, V. V. Pollyak, V. A. Chubinidze, N. P. Kabanov, E. P. Kurashvill and V. A. Ilinsky November 9, 1976	X	X						X		X	X	X				X	X						Russian	Yes	Vertical cylinder melter
3,997,315	Glass melting W. J. Rhodes and D. Marshall December 14, 1976	X	X											X				X						P. B.		Details on waist stirrers
4,000,360	Methods of and furnaces for melting glass P. A. M. Gell and D. G. Hann December 28, 1976	X	X											X										Elemelt		Outlet control electrodes
4,002,449	Method of melting laser glass compositions L. Spanoudis January 11, 1977										X	X						X						O. I.		Oxy/reduced melting for laser glass
4,006,003	Process for melting glass V. R. Daiga February 1, 1977		X								X							X						O. I.		Oil and coal fuel
4,012,218	Method and apparatus for melting glass H. Sorg and H. Pieper March 15, 1977	X	X						X		X	X	X	X				X						Sorg		Step/ arrier for refining

Patent no.	Title/inventor/date	1	2	3	4	5	6	7	8	9	10	11	12	13	14	15	16	17	18	19	20	21	22	Company affiliate	Recommend second look?	Comments by Walter Scott
4,019,888	Method of melting a raw batch and a glass furnace for performing the method P. J. M. Verhappen, A. Van Tienen, J. Maria, J. Feenstra and P. T. C. Bastings April 26, 1977	X						X		X		X						X						Phillips		Batch pellets through roof and rotor to distrib.
4,023,950	Method and apparatus for melting and processing glass H. I. Glaser May 17, 1977	X										X	X	X	X		X	X						Private		Distribution channel for fiberglass
4,025,713	Electric glass-melting furnaces V. Suesser, J. Vach, I. Ladr and J. Auerbeck May 24, 1977	X	X						X			X	X		X						X			Czec.		Cold bottom — electrode coupling
4,029,489	Method of and apparatus for melting of glass M. L. Froberg and C. M. Hohman June 14, 1977	X	X						X		X	X	X	X		X		X						OCF	Yes	Cold top melting with gas refining
4,036,625	Method of and furnace for batch charging into a glass melting furnace C. C. Holmes, W. Skinner and G. R. Mattocks July 19, 1977		X						X		X				X			X						Elemelt		Roof opening for charging
4,037,043	Extended arc furnace and process for melting particulate charge therein R. S. Segsworth July 19, 1977								X		X													Tibur - CA	Yes	Extended arc furnace for iron and other materials
4,045,197	Glassmaking furnace employing heat pipes for preheating glass batch Y.-W. Tsai, J. E. Sensi and V. I. Henry August 30, 1977							X	X	X		X						X						PPG		Methods for employing heat pipes to preheat batch
4,046,546	Method and apparatus for refining glass in a melting tank W. C. Hynd September 6, 1977	X												X			X	X						P. B.		Waist stirrers with no return flow system
4,046,547	Glass melting furnace and process for improving the quality of glass H. Pieper September 6, 1977	X	X								X	X	X	X	X		X	X						Sorg		Separate tanks with agitator and electric recirculation
4,062,667	Method of melting raw materials for glass K. Hatanaka, H. Inoue, H. Hisatomi, K. Okuda, T. Suzuki, M. Murao and S. Utiyama December 13, 1977	X			X	X		X	X	X	X	X						X						Cen. Glas	Yes - Unique	Inject batch materials into flames for quick melting

Patent no.	Title/inventor/date	1	2	3	4	5	6	7	8	9	10	11	12	13	14	15	16	17	18	19	20	21	22	Company affiliate	Recommend second look?	Comments by Walter Scott
4,082,528	Glass melting tank with temperature control and method of melting L. Stanley and D. Gelder April 4, 1978	X										X	X	X				X						P. B.		Use of tin on bottom of refining zone
4,099,951	Glass melting furnace and process with recirculation of molten glass H. Pieper July 11, 1978	X	X														X	X		X				Sorg		Electric furnace process control
4,099,953	Installation for heating starting materials for glass melting L. Rondeaux, J. Legrand and C. Baelde July 11, 1978				X		X																	Polysius	Yes	Fluid bed preheat
4,101,304	Method and apparatus for feeding glass out of a melting tank to a flat glass forming means J. Marchand July 18, 1978	X													X									BFG - Fr		Flat glass sloped canal with cooling
4,107,447	Electrical glass melting furnace H. Pieper August 15, 1978	X	X															X						Sorg		Electrode configuration
4,119,395	Method of recovering heat of combustion waste gas arising from glass tank furnace H. Kyohei, I. Hajime, H. Haruya, O. Koya, S. Takeshi, M. Mikio and U. Susumu October 10, 1978							X	X	X		X					X	X								Preheat with exhaust
4,135,904	Premelting method for raw materials for glass and apparatus relevant thereto S. Takeshi, M. Mikio, U. Susumu, H. Kyohei and I. Hajime January 23, 1979		X					X	X	X	X							X	X					Cen. Glas		Vertical premelter
4,183,725	Method and apparatus for melting glass in burner-heated tanks H. Garr and U. Hoffman January 15, 1980	X	X					X									X	X						Battelle	Yes	Method of preheating pellets and injecting
4,184,861	Energy efficient apparatus and process for manufacture of glass T. D. Erickson and C. M. Hohman January 22, 1980						X	X	X									X	X					OCF	Yes	Pellet preheat and indirect heating
4,184,863	Glass melting furnace and method H. Pieper January 22, 1980	X	X									X	X				X	X				X		Sorg		Gas to electric conversion; electrodes and refr.
4,219,326	Glass melting furnace structure R. O. Walton August 26, 1980											X					X							LOF		Flat glass waist and suspended walls

Patent no.	Title/inventor/date	1	2	3	4	5	6	7	8	9	10	11	12	13	14	15	16	17	18	19	20	21	22	Company affiliate	Recommend second look?	Comments by Walter Scott
4,226,564	Apparatus for feeding glass batch materials into a glassmelting furnace; T. Shiro and T. Yoshihiro October 7, 1980				X	X																		Asahi		Batch reciprocating feeder sealed to furnace
4,238,216	Heating glass batch material L. A. Nevard December 9, 1980					X	X	X	X	X								X						P. B.		Pellet preheating
4,290,797	Apparatus for dispensing and submersing batch materials in a molten glass furnace A. T. Rossi September 22, 1981								X									X						Tropicana		Batch feed below glass line
4,298,370	Method of improving glass melting by ablation enhancement J. J. Hammel November 3, 1981								X		X							X						PPG		Batch raft indentation for ablation melting
4,303,434	Method and apparatus for preheating pulverous materials prior to their introduction into a melting furnace S. Rough, Robert R. and D. C. Nugent December 1, 1981							X										X						O. I.	Yes	Counterflow vertical batch heater under pressure
4,306,899	Method for preheating pulverous materials prior to their introduction into a melting furnace R. S. Richards December 22, 1981							X										X						O. I.	Yes	Same as 4,303,434
4,310,342	Method and apparatus for preheating pulverous materials at reduced pressure prior to their introduction into a melting furnace R. S. Richards January 12, 1982							X										X						O. I.	Yes	Use of calcined lime; dessicant; subatmosphere
4,317,669	Glass melting furnace having a submerged weir G. R. Boss and A. G. Bueno March 2, 1982	X	X									X	X	X				X						LOF		Submerged weir at waist to impede return flow
4,323,384	Preheater for compacted vitrifiable material G. Meunier April 6, 1982							X	X	X								X						St. Gobain		Preheat pellets
4,325,693	Device for heating open melting baths W. Ackermann and F. Vollhardt April 20, 1982																							SAG		Not viable

Patent no.	Title/inventor/date	1	2	3	4	5	6	7	8	9	10	11	12	13	14	15	16	17	18	19	20	21	22	Company affiliate	Recommend second look?	Comments by Walter Scott
4,329,165	Method for enhanced melting of glass batch and apparatus therefor F. C. Rau May 11, 1982						X		X									X						PPG		Means to punch holes in batch blanket
4,330,314	Apparatus and process for predrying and preheating glass batch agglomerates before melting M. A. Propster, S. Seng and C. M. Hohman May 18, 1982						X	X	X															OCF		Use of exhaust gas to heat pellets
4,330,315	Method and apparatus for preheating pulverous materials prior to their introduction into a melting furnace F. J. Nelson, R. S. Richards and S. Rough, Robert R. May 18, 1982						X	X	X									X						O. I.		Recirculate 1/3 of exhaust gases; see 4,303,434
4,330,316	Method of preheating glass pellets C. M. Hohman, M. A. Propster and S. Seng May 18, 1982				X		X	X	X	X								X						OCF		Drying and preheating pellets without aglomeration
4,350,512	Glass melting method using cullet as heat recovery and particulate collection medium J. F. Krumwiede September 21, 1982					X		X	x	X						X		X	X					PPG	Yes	Possible means to utilize cullet to clean exhaust stream
4,353,726	Method and apparatus for preheating pulverous materials prior to their introduction into a melting furnace R. R. Rough Sr. October 12, 1982					X		X										X						O. I.		Means to preheat pellets without pluggage
4,358,304	Method for preparing molten glass M. L. Froberg November 9, 1982									X						X		X	X					OCF		Pellets to clean boron and flourine from stack gases
4,374,660	Fluidized bed glass batch preheater R. K. Sakhuja, W. E. Cole and D. Pavlakis February 22, 1983					X		X	X	X								X	X					ThermoEl		Preheating with cullet seperated from batch
4,380,463	Method of melting glass making ingredients J. M. Matesa April 19, 1983			X	X	X	X	X			X	X	X											PPG		Impractical
4,385,918	Method and apparatus for feeding raw material to an arc furnace C. S. Dunn and S. Seng May 31, 1983						X											X						OCF		Chute and deflector to feed arc furnace

Patent no.	Title/inventor/date	1	2	3	4	5	6	7	8	9	10	11	12	13	14	15	16	17	18	19	20	21	22	Company affiliate	Recommend second look?	Comments by Walter Scott
4,405,352	Method of melting glass on molten metal alloys K. H. Bloss and R. L. Stewart September 20, 1983	X																						PPG		Melting on copper or other alloys
4,406,683	Method of and apparatus for removing gas inclusions from a molten glass pool J. Demarest, Henry M. September 27, 1983												X					X						PPG		Use of a screen to degas glass — impractical
4,410,997	Furnaces for the melting of glass P. A. M. Gell and D. G. Hann October 18, 1983	X	X										X	X				X						TECO/Ele		Improve quality on all electric furnaces with aux. electrodes
4,413,346	Glass-melting furnace with batch electrodes R. W. Palmquist November 1, 1983	X	X						X		X	X	X					X						Corning	Yes	Electrodes thru the batch.
4,425,147	Preheating glass batch C. M. Hohman, M. A. Propster and S. Seng January 10, 1984							X	X	X								X						OCF		Preheating batch via heated balls for indirect heat
4,429,402	Devices for use in a glassmelting furnace H. J. Carley January 31, 1984										X							X		X				Corning		Coating electrodes with glass
4,441,906	Method of preheating glass batch M. A. Propster, S. Seng and C. M. Hohman April 10, 1984							X		X								X						OCF		Means to clean condensate from media exchange
4,468,164	Method and apparatus for feeding raw material to a furnace C. S. Dunn and S. Seng August 28, 1984										X	X												OCF		System for batch feeding an arc furnace
4,471,488	Direct induction melting device for dielectric substances of the glass or enamel type J. Reboux September 11, 1984								X		X													French		Induction melting with graphite cone
4,473,388	Process [furnace] for melting glass E. J. Lauwers September 25, 1984								X		X	X	X					X	X					UnionCar		Oxy-fuel cross-fire furnace with low momentum firing
4,483,008	Arc gap controller for glass-melting furnace E. C. Varrasso November 13, 1984										X				X				X					OCF		Position of electrodes to surface on electric arc furnace.
4,514,851	Arc circuit electrodes for arc glass-melting furnace C. S. Dunn April 30, 1985								X		X								X					OCF	Yes	Arc furnace configuration with multi-electrodes

Patent no.	Title/inventor/date	1	2	3	4	5	6	7	8	9	10	11	12	13	14	15	16	17	18	19	20	21	22	Company affiliate	Recommend second look?	Comments by Walter Scott
4,517,000	Apparatus for producing molten glass P. Burget and M. Zortea May 14, 1985													X				X						St. Gobain		Stirrer system in waist of furnace
4,528,012	Cogeneration from glass furnace waste heat recovery D. T. Sturgill July 9, 1985									X								X						O. I.	Yes	Heat recovery to electricity; brayton cycle heat exchanger
4,539,034	Melting of glass with staged submerged combustion H. P. Hanneken September 3, 1985	X										X	X	X				X						PPG		Submerged combustion in second stage of melter
4,543,117	Method for producing molten glass P. Burget and M. Zortea September 24, 1985														X			X						St. Gobain		Similar to 4,517,000 — waist stirrer
4,544,394	Vortex process for melting glass J. G. Hnat October 1, 1985								X	X	X	X					X	X						Private	Yes	Suspension heating of batch in axial swirl cyclone system
4,545,717	Machine for charging a glassmelting tank furnace F. Wittler and M. Fraikin October 8, 1985																	X						ZimmJan		Reduction of rear seal wear on recip batch charger
4,545,798	Ablating liquefaction employing plasma J. M. Matesa October 8, 1985										X	X						X						PPG	Yes	Application of plasma to rotary furnace
4,545,800	Submerged oxygen-hydrogen combustion melting of glass K. J. Won and G. A. Pecoraro October 8, 1985	X							X			X	X					X						PPG		O_2/H_2 submerged combustion in second stage of melter
4,549,895	Method and apparatus for melting glass T. Izumitani, T. Takajoh and I. Kinjo October 29, 1985	X	X									X	X					X						Hoya-Japn		Pipe melter to refine optical glass
4,553,997	Process for melting glass in a toroidal vortex reactor J. G. Hnat November 19, 1985				X				X	X	X	X					X	X						Private		Batch separation and separate feeds to vortex reactor
4,559,071	Ablating liquefaction method G. E. Kunkle and J. M. Matesa December 17, 1985								X	X	X	X						X	X					PPG	Yes	Rotary ablative melter for liquifing glass batch
4,559,072	Process and apparatus for producing glass S. Harcuba December 17, 1985								X	X	X	X						X						Private	Yes	Unique melting apparatus — ideas
4,564,379	Method for ablating liquefaction of materials G. E. Kunkle and J. M. Matesa January 14, 1986								X	X	X	X						X						PPG		Similar to 4,559,071

Patent no.	Title/inventor/date	1	2	3	4	5	6	7	8	9	10	11	12	13	14	15	16	17	18	19	20	21	22	Company affiliate	Recommend second look?	Comments by Walter Scott
4,582,521	Melting furnace and method of use M. L. Froberg April 15, 1986							X	X	X						X			X					OCF	Yes	Drum batch preheater with electrostatic exhaust
4,584,007	Apparatus for manufacturing glass M. Kurata April 22, 1986							X			X	X	X	X				X	X					Asahi	Yes	Separate melter and refiner with sill — shadow wall — unique
4,588,429	Method of heating particulate material with a particulate heating media C. M. Hohman, M. A. Propster and S. Seng May 13, 1986							X	X	X								X						OCF		Various preheat media materials
4,594,089	Method of manufacturing glass M. Kurata June 10, 1986											X	X					X						Asahi		Separate rffiner - see 4,584,007
4,610,711	Method and apparatus for inductively heating molten glass or the like J. M. Matesa, K. J. Won and J. Demarest, Henry M. September 9, 1986										X	X	X											PPG	Yes	Second stage melting with induction heating
4,611,331	Glass melting furnace R. W. Palmquist and R. R. Thomas September 9, 1986										X							X						Corning		Moly lined furnace with means to seal above glass line
4,617,042	Method for the heat processing of glass and glass forming material D. B. Stickler October 14, 1986										X	X	X				X	X	X					GRI	Yes	Suspension melt, impact surface separate gas and batch
4,632,687	Method of melting raw materials for glass or the like using solid fuels or fuel-batch mixtures G. E. Kunkle, H. M. Demarest and L. J. Shelestak December 30, 1986		X						X		X	X	X					X						PPG		Liquifaction using coal/oil in batch and reoxidizing
4,633,481	Induction heating vessel R. L. Schwenninger December 30, 1986											X	X					X						PPG		Induction heating — single turn coil and refractory/insulation
4,634,461	Method of melting raw materials for glass or the like with staged combustion and preheating J. Demarest, Henry M. , G. E. Kunkle and C. C. Moxie January 6, 1987		X						X	X	X	X						X	X					PPG	Yes	Co-current preheat with coal and oil in batch
4,642,047	Method and apparatus for flame generation and utilization of the combustion products for heating, melting and refining G. M. Gitman February 10, 1987										X				X									AmerCom		Oxy-fuel burner using oil

Patent no.	Title/inventor/date	1	2	3	4	5	6	7	8	9	10	11	12	13	14	15	16	17	18	19	20	21	22	Company affiliate	Recommend second look?	Comments by Walter Scott
4,654,068	Apparatus and method for ablating liquefaction of materials G. E. Kunkle and J. M. Matesa March 31, 1987										X	X						X						PPG	Yes	Liquifaction on lining of batch and maintenance of lining
4,668,271	Ablation melting with thermal protection H. C. Goode, G. N. Hughes and D. P. Michelotti May 26, 1987										X	X						X						PPG		Means to cool rotary melting vessle with water
4,676,819	Ablation melting with composite lining F. A. Radecki, G. N. Hughes and H. C. Goode June 30, 1987										X	X						X						PPG		Means to line vessel with refractory
4,687,504	Glass melting furnace with bottom electrodes H. Pieper, A. Knauer and H. Sorg August 18, 1987	X	X						x			X	X	X				X						Sorg		Bottom dam with electrodes along dam face
4,693,740	Process and device for melting, fining and homogenizing glass R. Noiret and M. Zortea September 15, 1987	X	X									X	X	X										St. Gobain	Yes	Chute refining system for volatile glasses
4,696,690	Method and device for preheating raw materials for glass production, particularly a cullet H. Roloff September 29, 1987					X		X								X		X	X				X	Private	Yes	Preheat cullet — gases to wet scrubber
4,718,931	Method of controlling melting in a cold crown glass melter G. B. Boettner January 12, 1988	X													X			X						Corning		Level control in cold top melter
4,725,299	Glass melting furnace and process M. J. Khinkis and H. A. Abbasi February 16, 1988	X	X						X		X													GRI		Port configuration — over-port and under-port firing
4,726,830	Glass batch transfer arrangements between preheating stage and liquefying stage G. N. Hughes and D. P. Michelotti February 23, 1988							X	X															PPG		Feeder arrangement between preheat and fusion process
4,738,702	Glass melting in a rotary melter J. S. Yigdall and Y.-W. Tsai April 19, 1988								X		X													PPG		Burner for rotary melter; gas circulation and control
4,738,938	Melting and vacuum refining of glass or the like and composition of sheet G. E. Kunkle, W. M. Welton and R. L. Schwenninger April 19, 1988								X	X	X	X	X					X					X	PPG	Yes	Two-step melt; vacuum refining apparatus; low sulfate; methods

Patent no.	Title/inventor/date	1	2	3	4	5	6	7	8	9	10	11	12	13	14	15	16	17	18	19	20	21	22	Company affiliate	Recommend second look?	Comments by Walter Scott
4,752,314	Method and apparatus for melting glass batch A. G. Fassbender, P. C. Walkup and L. K. Mudge June 21, 1988							X	X	X								X					X	Battelle	Yes	Separate sand and fluxes; preheat sand, melt fluxes
4,752,938	Baffled glass melting furnaces R. W. Palmquist June 21, 1988	X						X				X	X	X			X	X					X	Corning	Yes	Glass system baffles for improved performance
4,769,059	Glass melting furnace T. Hidai and T. Kondo September 6, 1988																									
4,778,503	Method and apparatus for preheating glass batch M. A. Propster, C. M. Hohman and S. Seng October 18, 1988							X	X	X						X		X	X				X	OCF	Yes	Preheat with cyclone seperator on exhaust
4,780,121	Method for rapid induction heating of molten glass or the like J. M. Matesa October 25, 1988										X	X	X					X						PPG		Induction heating as thermal boost to refining temp.
4,780,122	Vacuum refining of glass or the like with enhanced foaming R. L. Schwenninger, W. M. Welton, B. S. Dawson, J. M. Matesa and L. J. Shelestak October 25, 1988												X					X						PPG		Vacuum refining foam expander
4,789,390	Batch melting vessel lid cooling construction G. E. Kunkle, G. A. Pecoraro and J. Demarest, Henry M. December 6, 1988										X						X	X			X			PPG		Rotary melter lid with refractory layer and cooling
4,789,990	Glass melting furnace of improved efficiency H. Pieper December 6, 1988	X	X					X	X	X							X	X	X			X		Sorg	Yes	Combination electric and fuel — low energy and emissions
4,798,616	Multi-stage process and apparatus for refining glass or the like L. A. Knavish and D. R. Haskins January 17, 1989										X	X	X					X		X				PPG		Intermediate heater melter to refiner
4,809,294	Electrical melting technique for glass P. Daudin, P.-E. Levy, J.-Y. Aube, B. Duplessis and M. Boivent February 28, 1989	X	X								X							X		X				St. Gobain	Yes - Fiber Gl	Vertical electrodes through surface applying joule heating
4,816,056	Heating and agitating method for multi-stage melting and refining of glass Y.-W. Tsai and J. E. Sensi March 28, 1989	X										X	X					X						PPG		Second stage melter impinging burner

Patent no.	Title/inventor/date	1	2	3	4	5	6	7	8	9	10	11	12	13	14	15	16	17	18	19	20	21	22	Company affiliate	Recommend second look?	Comments by Walter Scott
4,818,265	Barrier apparatus and method of use for melting and refining glass or the like J. F. Krumwiede and H. C. Goode April 4, 1989	X										X	X					X						PPG		Surface barrier to hold foam back
4,828,595	[Vacuum melt] process for the production of glass H. Morishita, T. Imayoshi, H. Kikuchi and A. Nakamura May 9, 1989	X									X	X						X						Japan Oxy	Yes	Vacuum melt of silica-sintered product
4,831,633	Glass melting furnace R. D. Argent May 16, 1989	X							X			X					X	X	X			X		Holding Co	Yes	Separate melting of cullet and batch
4,852,118	Energy saving method of melting glass H. Pieper July 25, 1989	X							X	X	X	X	X	X			X	X				X		Sorg	Yes	Electric melting and fuel refining
4,875,919	Direct contact raining bed counterflow cullet preheater and method for using R. DeSaro, E. F. Doyle, C. I. Metcalfe and K. D. Patch October 24, 1989					X		X	X	X								X					X	GRI	Yes	Separate cullet preheater; raining bed melter
4,877,449	Vertical shaft melting furnace and method of melting M. J. Khinkis October 31, 1989	X	X			X		X	X	X	X	X				X		X	X				X	IGT	Yes	Vertical melter with submerged combustion; low energy
4,906,272	Furnace for fining molten glass G. B. Boettner March 6, 1990	X	X									X	X	X				X					X	Corning	Yes	Fining via vertical drop
4,911,744	Methods and apparatus for enhancing combustion and operational efficiency in a glass melting furnace M. E. Petersson, R. L. Strosnider and H. N. Hubert March 27, 1990								X		X							X			X			AGA		Oxy lancing on glass surface through tuckline
4,927,446	Glass melting furnace S. Manabe and Y. Nagashima May 22, 1990	X									X		X					X		X				NSG		Vertical electric, horizontal electric — flat platinum electrds
4,932,035	Discontinuous glass melting furnace H. Pieper June 5, 1990	X								X	X	X												Sorg	Yes	Similar to 4,852,119
4,957,527	Method and apparatus for heat processing glass batch materials J. G. Hnat September 18, 1990							X	X	X	X	X					X	X					X	Private	Yes	Cyclone melt/reactor to vitrify wastes — offers ideas
4,961,772	Method and apparatus for continuously melting glass and intermittently withdrawing melted glass R. K. Duly and J. A. Flavell October 9, 1990	X									X						X	X						TECO		Weir seperator for hand blown glass

Patent no.	Title/inventor/date	1	2	3	4	5	6	7	8	9	10	11	12	13	14	15	16	17	18	19	20	21	22	Company affiliate	Recommend second look?	Comments by Walter Scott
4,983,198	Glass melting method and apparatus K. Ogino January 8, 1991																				X			Hoya		Platinum lined furnace O_2 protected, for phosphate glass
5,006,144	Melting glass with oxidation control and lowered emissions L. A. Knavish and W. C. Harrell April 9, 1991	X		X									X			X		X	X					PPG		Lower emissions, less fining agent, colored glass
5,007,950	Compressed, wedged float glass bottom structure B. K. Krushinski, R. A. Lawhon, F. A. Radecki and R. L. Schwenninger April 16, 1991	X												X				X						PPG		Refractory bottom for metal filled conditioning chamber
5,028,248	Method of melting materials and apparatus therefor J. K. Williams, C. P. Heanley and L. E. Olds July 2, 1991										X	X						X		X				Tetronics	Yes	Rotating plasma arc furnace
5,057,133	Thermally efficient melting and fuel reforming for glass making M. S. Chen, C. F. Painter, S. P. Pastore, G. S. Roth and D. C. Winchester October 15, 1991							X		X						X		X	X		X		X	Air Prod.	Yes	Preheating usning gas systhesis and reforming
5,057,140	Apparatus for melting glass batch material J. S. Nixon October 15, 1991		X					X	X	X	X	X						X	X				X	P. B.	Yes	Batch digesters
5,078,777	Glass-melting furnace D. Cozac and J.-F. Simon January 7, 1992								X			X	X	X				X					X	Glaverbel		Dual refining cells; transfer weir
5,112,378	Bottom outlet device for a glass melting furnace S. Weisenburger, W. Grunewald and H. Seiffert May 12, 1992																			X	X			GmbH		Inductively heated metallic outlet
5,114,456	Discharging device for a glass melting furnace S. Weisenburger, W. Grunewald and H. Seiffert May 19, 1992																			X	X			GmbH		Outlet device with flange
5,120,342	High shear mixer and glass melting apparatus R. S. Richards June 9, 1992							X			X	X	X			X		X		X	X			GlasTec	Yes	Waste vertical melter w/ impeller, vacuum, plasma
5,139,558	Roof-mounted auxiliary oxygen-fired burner in glass melting furnace E. J. Lauwers August 18, 1992	X	X						X		X					X	X	X	X		X		X	UnCarbide		Furnace roof oxy burner at batch melt out — angled

Patent no.	Title/inventor/date	1	2	3	4	5	6	7	8	9	10	11	12	13	14	15	16	17	18	19	20	21	22	Company affiliate	Recommend second look?	Comments by Walter Scott
5,158,590	Process for melting and refining a charge D. Jouvaud, L. Pascarel and B. Genies October 27, 1992	X	X						X				X			X	X	X			X		X	AirLiquide	Yes	Oxy burners with cyclic and pulsating combustion
5,194,081	Glass melting process R. E. Trevelyan and P. J. Whitfield March 16, 1993	X	X									X	X	X				X				X	X	P. B.	Yes	Unique furnace configuration with riser
5,236,484	Method of firing glass-melting furnace K. R. McNeill August 17, 1993	X	X					X	X	X	X	X	X				X	X	X				X	Priv. Eng.	Yes	Vertical fusion with infrasound
5,241,558	Vertical glass melting furnace Y. Nagashima, K. Sakaguchi, S. Nakagaki, S. Manabe, Y. Inaka, T. Sunada and H. Tanaka August 31, 1993	X	X						X		X	X	X					X		X				NSG	Yes	Verticle tabular electric melter with stirrers
5,243,621	Method of feeding glass batch to a glass-melting furnace K. R. McNeill September 7, 1993	X	X					X	X	X	X	X	X				X	X	X				X	Priv. Eng.	Yes	Embodiments to 5,236,484 — batch feed
5,273,567	High shear mixer and glass melting apparatus and method R. S. Richards December 28, 1993								X		X	X								X				GlasTec		Radioactive waste vitrification melter with impeller
5,304,701	Melting furnace for treating wastes and a heating method of the same H. Igarashi April 19, 1994								X		X	X								X				Japan		Waste vitrification
5,364,426	High shear mixer and glass melting method R. S. Richards November 15, 1994							X		X	X											X		Stir-Melter	Yes	Fiber waste vertical stir melter
5,370,723	Glass melting furnace with control of the glass flow in the riser R. E. Trevelyan and P. J. Whitfield December 6, 1994														X					X				P.B.		Similar to 5,194,081; temperature control
5,399,181	Method and apparatus for preheating charging material having organic contaminants for glass melting furnaces H. Sorg March 21, 1995							X		X						X			X		X			Sorg		Preheating glass with organic contamination
5,445,661	Melting end for glass melting furnaces with soldier blocks and operating process therefor A. Knauer August 29, 1995																X	X					X	Sorg KG		Basinwall management — soldier course; patch blocks

Patent no.	Title/inventor/date	1	2	3	4	5	6	7	8	9	10	11	12	13	14	15	16	17	18	19	20	21	22	Company affiliate	Recommend second look?	Comments by Walter Scott
5,536,291	Method for melting glass in and a glass melting furnace for the practice of the method H. Sorg and H. Pieper July 16, 1996	X						X	X		X	X	X	X			X	X	X				X	Sorg	Yes	Furnace with dividing walls; bubblers; shallow refiner
5,548,611	Method for the melting, combustion or incineration of materials and apparatus therefor M. J. Cusick, M. A. Weinstein and L. E. Olds August 20, 1996								X	X	X	X				X	X	X	X					Schuller	Yes	Waste vitrification with plasma torches
5,556,443	Method for cullet preheating and pollution emission reduction in the glass manufacturing process J. C. Alexander September 17, 1996					X		X	X	X						X		X	X				X	Edmistn	Yes	Cullet cleaning of exhaust with electrostatic bed
5,564,102	Glass melting treatment method H. Igarashi, H. Kobayashi and K. Noguchi October 8, 1996										X									X				Japan		Atomic waste vit; cold crucible — induction
5,573,564	Glass melting method R. S. Richards November 12, 1996								X		X	X								X				Stir-Melter		Electrode arrangements to minimize current on stirrer
5,613,994	Electric furnace for melting glass J. A. C. Muniz, L. G. Goicoechea and M. Lemaille March 25, 1997										X							X		X				St. Gobain		Furnace with movable alloy barriers
5,628,809	Glass melting method with reduced volatilization of alkali species H. Kobayashi										X	X	X											Praxair		Method for shield of O_2 between glass and fires
5,655,464	Apparatus for melting glass R. Moreau, R. Gobert and P. Jeanvoine August 12, 1997							X	X	X	X					X	X	X	X		X		X	St. Gobain		Oxy furnace and means to seal melter/refiner from condnr
5,665,137	Method for controlling secondary foam during glass melting J. Huang September 9, 1997											X	X											OCF		Foam control with oxidation means
5,672,190	Pool separation melt furnace and process A. F. Litka, J. A. Woodroffe, V. Goldfarb, A. W. McClaine and K. J. Keane September 30, 1997	X						X	X		X	X	X			X		X	X					GRI	Yes	Vertical combuster with batch and cullet
5,728,190	Melting furnace and process for the inertization of hazardous substances by vitrification H. Pieper, L. Rott and M. Bucar March 17, 1998											X	X			X								Sorg		Waste vit with sidewall oxidizing nozzles

Patent no.	Title/inventor/date	1	2	3	4	5	6	7	8	9	10	11	12	13	14	15	16	17	18	19	20	21	22	Company affiliate	Recommend second look?	Comments by Walter Scott
5,766,296	Furnace for melting glass and method for using glass produced therein R. Moreau June 16, 1998	X	X								X	X	X	X				X		X			X	St. Gobain	Yes	Furnace — transverse sills with electrodes and bubblers
5,779,754	Process and horseshoe flame furnance for the melting of glass P. Bodelin and P. Recourt July 14, 1998	X							X			X	X							X	X		X	Air Liquide		Air-fuel melter with air/oxy refining flame
5,795,285	Conversion of contaminated sediments into useful products by plasma melting D. F. McLaughlin and N. H. Ulerich August 18, 1998															X			X	X				Private		Plasma melt of sluge for use on roads
5,807,418	Energy recovery in oxygen-fired glass melting furnaces R. P. Chamberland and H. Kobayashi September 15, 1998							X		X		X						X	X					Praxair		Preheat oxygen and batch with waste heat
5,822,879	Method and oven for homogeneously melting by microwaves with oscillation of stationary waves for vitrifying materials and gas outlet flow J.-J. Vincent, J.-M. Silve, R. Cartier and H. Frejaville October 20, 1998										X													FR-Atomic	Yes	Microwave vitrification of atomic waste
5,849,058	Refining method for molten glass and an apparatus for refining molten glass S. Takeshita, C. Tanaka and K. Ishimura December 15, 1998	X										X	X	X				X						Asahi	Yes	Vacuum refining process
5,906,119	Process and device for melting glass J. Boillet May 25, 1999		X								X					X			X					St. Gobain		Oxy firing with separate oxygen lances
5,922,097	Water enhanced fining process a method to reduce toxic emissions from glass melting furnaces H. Kobayashi and R. G. C. Beerkens July 13, 1999	X											X							X				Praxair		Refining enhancement with dissolved water
5,979,191	Method and apparatus for melting of glass batch materials C. Q. Jian November 9, 1999	X									X	X	X					X	X				X	OCF	Yes	Vortex oxy-fuel batch melt chamber
6,014,402	Electric resistance melting furnace L. Lefevere January 11, 2000		X					X	X		X							X		X				Bayer		Cold top; rotatable; frequent product changes

Patent no.	Title/inventor/date	1	2	3	4	5	6	7	8	9	10	11	12	13	14	15	16	17	18	19	20	21	22	Company affiliate	Recommend second look?	Comments by Walter Scott
6,044,667	Glass melting apparatus and method V. C. Chenoweth April 4, 2000										X							X		X				Guar. Fibr		Electrode configuration to reduce refractory wear
6,085,551	Method and apparatus for manufacturing high melting point glasses with volatile components H. Pieper and J. Matthes July 11, 2000	X							X		X	X				X	X	X	X		X		X	Sorg	Yes	Bottom step to refining bank with bubblers and electrodes
6,154,481	Method of operation of a glass melting furnace and a glass melting furnace for the practice of the method H. Sorg and H. Pieper November 28, 2000	X								X		X						X						Sorg		Radiation screen wall between melter and refiner
6,237,369	Roof-mounted oxygen-fuel burner for a glass melting furnace and process of using the oxygen-fuel J. R. LeBlanc, R. M. Khalil Alchalabi, D. J. Baker, H. P. Adams and J. K. Hayward May 29, 2001	X	X						X		X	X				X	X	X	X		X		X	OCF/BOC	Yes	Conventional furnace with oxy-fuel burners through crown
6,308,534	Vacuum degassing apparatus for molten glass Y. Takei, S. Inoue, M. Sasaki, Y. Hirabara, A. Tanigaki and M. Sugimoto October 30, 2001	X										X	X	X				X						Asahi	Yes	Vacuum degassing apparatus
6,314,760	Glass melting apparatus and method V. C. Chenoweth November 13, 2001										X	X						X						Guar.Fibr		Similar to 6,044,667 with dual exhausts
6,318,127	Method of glass manufacture involving separate preheating of components F. S. Illy November 20, 2001	X			X			X	X	X	X	X						X	X					Air Liquide	Yes	Optimization of preheat by seperating batch materials
2142920 (Russia)	Glass Furnace Klegg 1999								X																	
2136617 (Russia)	A Method of Producing Fibers from Rocks and a Set Designed for the Manufacture Gromkov 1998	X		X																						
357162 (USSR)	A Method of Combusting Fuel in a Glass Furnace Bondariev 1987								X						X											
1470672 (USSR)	A Heat-insulated Glass Furnace Wall Dzyuzer 1987								X																	

Patent no.	Title/inventor/date	1	2	3	4	5	6	7	8	9	10	11	12	13	14	15	16	17	18	19	20	21	22	Company affiliate	Recommend second look?	Comments by Walter Scott
1252308 (USSR)	A Method to Manufacture Light-transparent Stained-glass Window. Chughunov 1985	X																								
1252306 (USSR)	A Method to Manufacture Certain Optical Details Fohkin 1985	X																								
1470671 (USSR)	A Method of Heating a Tank Glass Furnace Levihtin 1985								X																	
1252302 (USSR)	A Set Feeding the Electric Glass Furnace with Batch Vehdeneyev 1985																									
1252304 (USSR)	A Set Intended for Controlling the Temperature Condition of a Glass Mass Feeder Laptev 1984														X											
1252303 (USSR)	A Tank Glass Furnace Levihtin 1984								X			X		X												
1121242 (USSR)	A Tank Glass Furnace Levihtin 1984								X			X														
1188113 (USSR)	A Graphite Crucible Intended for Fusing Quartz Glass Blocks Shain 1984	X																								
1121243 (USSR)	A Method of Heating the Glass Furnace Tank Ghoussev 1983								X						X											
1188112 (USSR)	A Method Intended for Heating a Tank Glass Furnace Levihtin 1983								X	X																
1121241 (USSR)	A Glass Furnace Matveyenko 1983	X							X			X														
1121244 (USSR)	A Method Intended for Initial Heating of a Tank Glass Furnace Rihder 1983								X			X														

Patent no.	Title/inventor/date	1	2	3	4	5	6	7	8	9	10	11	12	13	14	15	16	17	18	19	20	21	22	Company affiliate	Recommend second look?	Comments by Walter Scott
1188115 (USSR)	A Method of Combusting Fuel in a Glass Furnace Kirilenko 1982								X					X												
1188114 (USSR)	A Method Intended for Melting Enamel in the Rotary Barrel Furnace Koudryavaya 1982																									
600096 (USSR)	An Electric Glass Furnace Andrusenko 1981	X										X		X												
975596 (USSR)	A Method Intended for Melting Glass Levihtin 1981								X	X																
872475 (USSR)	Method of Manufacturing High-melting Glasses and Induction Furnace for Producing Them Nezhentsev 1979								X			X														
771027 (USSR)	A Method Intended for Melting Glass in a Tank Furnace Seskoutov 1978								X						X											
591415 (USSR)	A Method Intended For Heating a Glass Furnace Shchoukin 1978								X						X											
771028 (USSR)	A Method Intended for Keeping a Glass Furnace Heated Shchoukin 1978								X						X											
2154035 (Russia)	Glass Furnace Tohkarev 1978	X							X			X														
617387 (USSR)	A Current-Carrying Unit for an Electric Furnace Boghatyrev 1976								X																	
591414 (USSR)	The Method of Combusting Fuel in a Glass Furnace Bondariev 1976								X						X											
617388 (USSR)	A Set Intended for Mixing Glass Mass Dolghoshev 1976													X												

Patent no.	Title/inventor/date	1	2	3	4	5	6	7	8	9	10	11	12	13	14	15	16	17	18	19	20	21	22	Company affiliate	Recommend second look?	Comments by Walter Scott
668887 (USSR)	A Method Intended for Heating a Glass Furnace Shchoukin 1976								X			X			X											
617386 (USSR)	A Method of Combusting Fuel in a Glass Furnace Iliashenko 1975								X						X											
668886 (USSR)	A method of Heating a Tank Glass Furnace Shchoukin 1975								X					X	X											
305140 (USSR)	Glass Furnace Koupfer 1974								X																	
357159 (USSR)	A Cyclone Glass Melter Avrus 1971	X							X																	
357158 (USSR)	A Method of Cyclone Glass Melting Avrus 1971								X		X															
357162 (USSR)	A Method of Combusting Fuel in a Glass Melter Bondariev 1971								X																	
357161 (USSR)	A Glass Melter Boudov 1971								X			X														
265399 (USSR)	Tank Glass Furnace Koupfer 1971											X		X												
983082 (USSR)	The Method of Preparing Glass Batch Kirakosyan 1968			X				X																		
1146282 (USSR)	The Method of Preparing Granulated Glass Batch Manusohvich 1968			X				X																		
357160 (USSR)	A Method of Melting Glass Andrusenko 1959								X		X			X												
6,334,336	Vacuum degassing apparatus for molten glass and method for building it Y. Takei, M. Sasaki, M. Matsuwaki, S. Inoue, A. Tanigaki and M. Sugimoto January 1, 2002											X	X					X						Asahi	Yes	Method of building vacuum degassing vessle

Patent no.	Title/inventor/date	1	2	3	4	5	6	7	8	9	10	11	12	13	14	15	16	17	18	19	20	21	22	Company affiliate	Recommend second look?	Comments by Walter Scott
6,339,610 B1	Glass melting tank and process for melting glass P. Hoyer, A. Drechsler, P. Elzner and F.-T. Lentes January 15, 2002	X									X	X	X				X	X						Schott	Yes	Heating of glass in a narrow channel
6,357,264	Apparatus for melting molten material R. S. Richards March 19, 2002	X							X		X	X						X	X					Private	Yes	Submerged oxy-fuel conditioning - rotatable
00041635/EP A1	Method of improving glass melting by ablation enhancement J. J. Hammel, E. P. Savolskis, W. W. Scott and F. C. Rau December 16, 1981	X							X		X						X	X	X				X	PPG	Yes	Device and method for improving ablative melting
00171637/EP A1	Submerged oxygen-hydrogen combustion melting of glass K. J. Won and G. A. Pecoraro February 19, 1986	X									X	X	X				X	X						PPG		H2/o2 submerged comb. Inm second stage melting
00171638/EP A1	Melting of glass with staged submerged combustion H. P. Hanneken February 19, 1986	X									X	X	X				X	X						PPG		See 4539034
00298589/EP A2	Method and apparatus for melting glass batch A. G. Fassbender, L. K. Mudge and P. C. Walkup January 11, 1989	X									X	X						X						Battelle		See 4752314 - separate sand and flux preheat - inject
00345004/EP A1	Glass melting furnace R. D. Argent December 6, 1989	X							X			X					X	X	X			X	X	Holding Co	Yes	See 4831633
00360535/EP A2	Glass melting furnace, and method of operating a furnace R. K. Duly and J. A. Flavell March 28, 1990	X									X						X	X						TECO		See 4961772
00403184/EP B1	Glass melting R. E. Trevelyan and P. J. Whitfield April 5, 1995	X	X									X	X	X				X						P. B.		See 5194081 and 5370723
00504774/EP B1	Vertical glass melting furnace Y. Nagashima, K. Sakaguchi, S. Nakagaki, S. Manabe, Y. Inaka, T. Sunada and H. Tanaka October 16, 1996	X	X						X		X	X	X					X		X				NSG		See 5241558
00508139/EP B1	Glass melting furnace with high-momentum, oxygen-fired auxiliary burner mounted in the front wall E. J. Lauwers September 13, 1995	X											X					X						Praxair		Frontwall oxy fire to hold batch back from throat

Patent no.	Title/inventor/date	1	2	3	4	5	6	7	8	9	10	11	12	13	14	15	16	17	18	19	20	21	22	Company affiliate	Recommend second look?	Comments by Walter Scott
00574537/EP B1	High shear mixer and glass melting apparatus and method R. S. Richards October 20, 1999								X		X	X								X				GlasTec		See 5273576
00808806/EP A1	Method for recovering energy in oxygen-fired glass melting furnaces R. P. Chamberland and H. Kobayashi November 26, 1997							X		X		X						X	X					Praxair		See 5807418
00812809/EP A2	Method to reduce toxic emissions from glass melting furnaces by water enhanced fining process H. Koyabashi and R. G. C. Beerkens November 25, 1998	X											X			X			X					Praxair		See 5922097
00884287/EP A1	Water enhanced fining process a method to reduce toxic emissions from glass melting furnaces H. Kobayashi and R. Beerkens December 16, 1998	X											X			X			X					Praxair		See 5922097 - steam bubbling
01046618/EP A1	Method for melting glass Y. Takei and K. Oda October 25, 2000											X				X								Asahi	Yes	Methods to dissolve foam - organic metal inject with gas
01077201/EP A2	Method of boosting the heating in a glass melting furnace using a roof-mounted oxygen-fuel burner N. G. Simpson, G. F. Prusia, S. M. Carney, T. G. Clayton, A. P. Richardson and J. R. Leblanc February 21, 2001	X							X		X							X	X				X	BOC	Yes	Roof mounted oxy-fuel burners over batch in conv. Tank
01078892/EP A2	Process and furnace for melting glass using oxy-fuel burners R. Alchalabi, D. Satchell and S. V. Krishnan February 28, 2001								X		X						X	X	X				X	BOC	Yes	Roof burners with alternate lean and rich firing
01136451/EP A2	Glass melting process and furnace therefor with oxy-fuel combustion over melting zone and air-fuel combustion over fining zone B. C. Hoke, K. A. Lievre, A. G. Slavejkov, J. L. Inskip, R. D. Marchiando and R. M. Eng September 26, 2001	X							X	X	X		X					X			X			Air Prod		Furnace config. For oxy-fuel melting, air-fuel refining
00128702 WO	Processing of contaminated river sediment in a glass melting furnace T. J. Baudhuin April 26, 2001															X			X					Min-Ergy		Conversion of contaminated river slug to glass

Patent no.	Title/inventor/date	1	2	3	4	5	6	7	8	9	10	11	12	13	14	15	16	17	18	19	20	21	22	Company affiliate	Recommend second look?	Comments by Walter Scott
09736134 WO	Glass melting furnace M. L. Joshi and P. J. Mohr October 2, 1997								X							X			X				X	CombTec		NO_x control with in-line burners in firing ports
09855411 WO	Glass induction melting furnace using a cold crucible C. Q. Jian December 10, 1998	X									X	X	X					X	X				X	OCF	Yes	See 5979191
09923050 WO	Method and apparatus for melting of glass batch materials D. R. Coupland, M. L. Doyle, R. Herts and P. M. Williams May 14, 1999	X																						JohnMathy		Platinum coating to refractories
RE29,622	Apparatus and process for pellet preheating and volatile recycling in a glass making furnace K. H. Lange May 2, 1978							X	X	X						X		X						Pullman		Batch and cullet pellet preheating
RE32,317	Glass batch liquefaction G. E. Kunkle and J. M. Matesa December 30, 1986								X	X	X	X					X	X						PPG	Yes	Rotary ablative melter to do first stage melting

Appendix B Glossary

amortization: Accounting procedure that gradually reduces the cost value of a limited life or intangible asset through periodic charges to income. For fixed assets the term used is "depreciation."

AZS: Refractory materials composed from a combination of alumina, zirconia, and silica produced using the fusion casting process, these high-density, low-porosity refractories are used in glass furnaces because of their excellent resistance to the corrosion of molten glass.

bag house: A chamber containing an arrangement of bag filters for the removal of particles from a process exhaust stream.

batch: A mixture of the individual raw materials combined in specified amounts to produce the desired glass type that is ready to be delivered into a glass furnace, or the individual raw materials weighed but unmixed.

batch carryover: The movement of solid particles of batch material on the surface of the melt within the glass furnace due to the velocity and momentum of combustion products. Batch carryover results in decreased heat transfer and an increase in the amount of solid batch particles in stack exhaust. *See also* **batch**.

batch preheating: The process of heating the batch before it is delivered into the glass furnace. *See also* **batch**.

batch wetting: The process of wetting the batch with water to minimize airborne dust before it is delivered into the glass furnace. *See also* **batch**.

beneficiation: Any process that is used to improve the physical or chemical properties of the batch. Examples include crushing, screening, cullet sorting, etc. *See also* **batch.**

best available control technology (BACT): In environmental policy, refers to the use of state-of-the-art control and treatment technology to achieve the lowest possible emissions rate.

blister: A relatively large bubble remaining in finished glass. *See also* **bubble.**

bottle blowing machine: An automated machine that forms glass bottles by blowing air into a molten glass gob that sits inside a metal mold, causing the gob to take the shape of the mold. The most common of these machines is the independent section (IS) machine. *See also* **gob**.

briquetting: The process of compacting the glass batch material into cubes or other shapes to reduce dust emissions. *See also* **pelletizing**.

bubble: A gaseous inclusion in a finished glass product. This visible defect is most often caused by insufficient refining during the melting process. Large bubbles are referred to as blisters and small bubbles as seeds.

bubblers: Water-cooled nozzles located on the bottom of a glass furnace that are used to introduce large air bubbles into the glass melt to improve homogeneity of the melt and eliminate fine seed bubbles by drawing cold glass closer to the surface of the melt.

capital productivity: The measure of how well physical capital (machinery and buildings) is used in providing goods and services.

checker: An open structure of firebrick that serves as a heat exchanger for regenerative glass furnaces. *See also* **regenerator**.

conditioning: A phase during the glass melting process where soluble bubbles are reabsorbed into the melt. The conditioning phase is preceded by primary melting and refining stages.

cost of capital: Rate of return that a business could earn if it chose another investment with equivalent risk, in other words, the opportunity cost of the funds employed as a result of an investment. Cost of capital is also calculated using a weighted average of the firm's costs of debt and classes of equity.

cracker/gas reformer equipment: Equipment used to reduce NOx emissions in the process of natural gas firing in a glass furnace. In this method, about a quarter of the furnace gas consumption is taken through a separate "cracker" that produces soot particles. These soot particles are then reblended with the balance of gas, producing a soot-rich gas mixture. The combustion of this soot-rich gas produces a flame with increased luminosity and lower peak flame temperatures. *See also* **NOx**.

cross-fired regenerative furnace: A regenerative glass furnace with burners and regenerators located on each side. Typically, a group of burners from one side fires across the width of the furnace while the burners on the opposite side remain idle. After a predetermined amount of time the sequence alternates. *See also* **regenerator**.

crystalline silica: The scientific name for a group of minerals composed of silicon and oxygen (SiO2). The term "crystalline" refers to the fact that the oxygen and silicon atoms are arranged in a three-dimensional repeating pattern. Prolonged exposure to dust containing crystalline silica is a health hazard and could lead to silicosis, a noncancerous lung disease.

cullet: Waste or broken glass suitable as an addition to the glass batch. It can be from the same glass plant (factory, in-house, or domestic cullet) or from an outside source (foreign cullet).

depreciation (finance): Amortization of fixed assets, such as plant and equipment, so as to allocate the cost over their depreciable life. Depreciation reduces taxable income, but does not reduce cash.

distributor: A channel or series of channels that guides molten glass from the melter via a submerged throat to the forehearth(s). Distributor channels are designed much like forehearths in that they are divided into temperature control zones with independent firing systems. *See also* **throat** and **forehearth**.

E-glass: Abbreviation for electrical-grade glass. This glass is an alumina-borosilicate glass and is commonly used to make fibers that require low alkali content.

electric boosting: A supplementary method of adding heat to a glass melt in a gas- or oil-fired furnace by passing an electrical current through the molten glass.

electrostatic precipitator: Emission control device used to remove solid particles from combustion gases generated from a glass furnace by giving the particles an electric charge and attracting them to charged plates. Electrostatic precipitators are typically part of an overall emission control system.

end port furnace: A glass melting furnace in which the ports for the introduction of fuel and air are located in the end or back wall. Also called an end-fired furnace.

energy balance: The arithmetic balancing of energy inputs versus outputs for an object or processing system such as glass melting.

enthalpy: The sum of the internal energy of a body and the product of its volume multiplied by the pressure exerted on the body by its surroundings. Also known as sensible heat, total heat, and heat content. Enthalpy values are helpful in understanding energy efficiencies of glass furnaces.

environmental credits: A system of tradable emissions credits, developed by EPA in the 1970s, to implement federal air quality standards in a more flexible and less costly manner. This system is designed to limit emissions using market-based incentives to promote cost-effectiveness. Under this system, companies facing high pollution-

reduction costs could purchase excess reductions (credits) from other companies whose emissions were lower than federal regulations require.

environmental stewardship: When businesses take the responsibility to eliminate, reduce, and monitor pollutants that harm the health of the environment.

EVA (economic value added): The residual income that remains after subtracting the cost of all capital (debt and equity) from after-tax profits. EVA = $(r - c)$ □ capital where r = rate of return on capital, c = weighted average cost of capital, and capital = capital employed at the beginning of the year.

fictive temperature: a synonym for glass transition temperature.

float glass: Flat glass that is produced by a continuous process in which molten glass is floated on a bath of molten metal, commonly tin.

forehearth: A refractory-lined channel whose function is to receive glass from the melter, refiner, or distributor; reduce the glass temperature to a desired level; and discharge it to a feeder mechanism for forming.

forming method: In glass manufacturing, the processing methods used to produce the finished product.

fusion (sand solution) process: The process of melting glass batch to form a more or less homogeneous mass. *See also* **batch**.

gob: A drop of molten glass formed by the cutting of a stream of glass as it flows from the forehearth through a feeder and into an orifice of variable diameter. The greater the diameter, the larger the gob. Gobs are fed into forming machines to be molded into bottles or other glass objects.

heavy metals: A group of metals whose specific gravity is approximately 5.0 or higher. These metals (e.g., lead, cadmium, beryllium) and their compounds are considered to be toxic and become health hazards at elevated levels.

hurdle rate: The required rate of return in a discounted cash flow analysis, above which an investment makes sense and below which it does not. Also known as required rate of return.

KK BTU/ton: equals million BTU per short ton.

NPV (net present value): An analytical method used in evaluating investments whereby the net present value of all cash outflows (such as the cost of the investment) and cash inflows (returns) is calculated using a given discount rate, usually a **required rate of return.** An investment is acceptable if the NPV is positive. In capital budgeting, the discount rate is called the **hurdle rate** and is usually equal to the incremental **cost of capital.**

NOx: Nitrogen oxides. During the glass production process, air emissions such as nitrogen oxides are generated. The U.S. Federal Clean Air Act limits the level of NOx and other pollutants that glass plants can generate.

oxy-fuel fired: Replacing combustion air with oxygen (>90% purity) in the firing process to reduce both energy consumption and pollution.

pelletizing: The process of forming the glass batch into pellets to reduce dust emissions. *See also* **briquetting**.

preheater: Any device used to heat the batch and/or cullet material before it is charged into the furnace. *See also* **preheating** and **batch**.

preheating: To subject the batch and or cullet material to a heat treatment prior to charging into the furnace. *See also* **preheater**.

Proportional-Integral-Derivative (PID): a type of feedback controller whose output, a control variable (CV), is generally based on the error (e) between some user-defined set point (SP) and some measured process variable (PV). Each element on the PID controller refers to a particular action taken on the error.

pull rate: The quantity of glass delivered by a glass furnace during a designated period of time (usually 24 h).

recuperative furnace: A melting furnace having a recuperator. *See also* **recuperator**.

recuperator: A continuous heat exchanger in which heat from exhaust gases from the glass furnace is conducted through flue walls or a system of ducts to incoming air.

redox: A term for oxidation-reduction reactions observed in chemical systems. The term "redox equilibria" is used to refer to the balance between reduction and oxidation in the glass furnace, which is important for controlling the fining process and the final glass color.

refining: The process in which bubbles and undissolved gases and solids are removed from the molten glass. *See also* **bubble**.

refractories: Ceramic materials that have high melting points and withstand high temperatures. They typically are hard and are resistant to abrasion, corrosion, and rapid thermal fluctuations. In glass manufacturing, they are used to line and insulate the glass furnace tank and other high-temperature areas such as the checker system.

regenerator: A cyclic heat interchanger that alternately receives heat from gaseous combustion products from the glass furnace and transfers that heat to air or gas before combustion. A glass furnace that incorporates regenerators is called a regenerative furnace.

required rate of return: Return required by investors before they will commit money to an investment at a given level of risk. Unless the expected return exceeds the required return, an investment is economically unattractive. *See also* **hurdle rate.**

residual income: A divisional profitability indicator that represents the "profit" remaining after the suppliers of all resources required to generate revenues have been fairly compensated, including the supplier of the capital, the parent corporation. It is determined by assessing a capital charge, which is subtracted from division income, to arrive at division residual income.

residual value: The amount a company expects to be able to sell a fixed asset for at the end of its useful life.

return on sales: Net pre-tax profits as a percentage of net sales, a useful measure of overall operational efficiency when compared with prior periods or with other companies in the same line of business.

return on invested capital: Amount, expressed as a percentage, earned on a company's total capital of its common and preferred stock equity plus long-term funded debt. Calculated by dividing total capital into earnings before interest, taxes, and dividends.

roadmap: A detailed plan that seeks to provide guidance and clarity on specific issues to an organization or industry group and ensures that these issues are executed in an efficient and effective manner.

scrubber: Emission control device that assists in the removal of solid particles from combustion gases generated from a glass furnace. Scrubbers (wet or dry) are typically part of an overall emission control system.

skull melting: a containerless method for melting and crystallizing materials at very high temperatures (>3000˚C)

seed: A small (fraction of a millimeter diameter) gaseous inclusion (bubble) in glass. *See also* **bubble.**

Seg-Melt: Glass melting furnace that separates the batch material from the cullet in the melting process. *See also* **batch** and **cullet**.

segmentation: Dividing the melting and refining stages into individual sections or processes (as opposed to occurring in the same glass tank) in order to achieve increased flexibility, improved process control, and reduced energy costs.

shear dissolution: The act or process of separating and dissolving batch materials within a glass melt by shear currents. Shear currents can be increased by the use of bubblers. *See also* **bubblers**.

SOx: Sulfur oxides (i.e., SO_2). During the glass production process, air emissions such as sulfur oxides are generated. The U.S. Federal Clean Air Act limits the level of SOx and other pollutants that glass plants can generate.

SVA (shareholder value analysis or shareholder value added): The process of analyzing how decisions affect the net present value of cash to shareholders. The analysis measures a company's ability to earn more than its total cost of capital. This tool is used at two levels within a company: the operating business unit and the corporation as a whole.

T_g: Denotes the transformation temperature of a glass, where the second order change from supercooled liquid to glassy state occurs on cooling.

thermochemical recuperation: Waste heat recovery system where heat is produced via a chemical reaction. *See also* **recuperative furnace**.

throat: A submerged passage connecting the melting end to the working or refining end of a glass-tank furnace.

torr: A unit of pressure equal to 1/760 of an atmosphere (about 133.3 Pa).

TV glass: Refers to the components that make up a television tube including panel, funnel (cone), and neck, or the batch composition used to produce such components.

VOC (volatile organic compounds): Environmental emissions of chemicals, usually hydrocarbons, in a process.

Waist: A narrow opening, primarily found in float furnaces, between the melting chamber and the thermal conditioning section of a glass melting furnace. Devices such as blenders or cooling coils are inserted to control glass flow between the two chambers.

wet chop fiber: Fiberglass strand that has been chopped to specified lengths directly after the application of a sizing (organic coating) material.

wool insulation: A mass of glass staple fibers of random arrangement bonded in a three-dimensional network. Used as low-density materials for thermal insulation.

Sources of economic glossary definitions:
Dictionary of Finance and Investment Terms. 6th Edition. Barron's Educational Series, 2003.
John Colley Jr., Jacqueline L. Doyle, and Robert D. Hardie. *Corporate Strategy.* The McGraw Hill Executive MBA Series, 2002. I.J. McColm, Dictionary for Ceramic Science and Engineering, 2nd ed., Plenum Press, New York (1993).

Appendix C Contributors and Sponsors

The assessment of glass manufacturing in the United States has been made possible through the generous financial support of private corporations and government agencies. The value of this document has been greatly enhanced by the voluntary contribution of expertise, energy and time of scientists, engineers, managers and manufacturers in all segments of the glass community throughout the US and abroad.

C.1. Principal Investigators

C. Philip Ross began his 34-year career in the glass industry in 1965 after he received a BSc degree in ceramic engineering from the University of Illinois, where he studied under Prof. Fay Tooley, editor of "The Handbook of Glass Manufacture." Ross brought over 27 years of first-hand experience in glass manufacturing to the project from employment at Kerr Glass Manufacturing Corporation (1977-1992) as divisional vice president for batch and furnace engineering; Glass Container Corporation (1968-1972) as area furnace engineer; Anchor Hocking Glass Co. (1965-1968). For over 12 years, he has consulted with glass manufacturers in the US and abroad on glass technology and furnace design through his company Glass Industry Consulting International.

Gabe L. Tincher, economic assessments consultant on the project, worked for 30 years at Owens Corning as a group leader in strategic planning, technical planning, venture development, and business-technical analysis. As Leader of Strategic Planning, he conducted a broad assessment of Owens-Corning's technology base, "Technology 2000." That resulted in re-allocation of technology resources, new hires in critical technology areas, and creation of a corporate competitive technology intelligence capability. Tincher earned a BS degree in chemistry and mathematics from Western Kentucky University, a MS in chemistry from University of Kentucky, and a MSIA from Purdue University's Krannert Graduate School of Management.

C.2. GMIC Members 2001 to 2003

CertainTeed Corporation
Corning Incorporated
Fire and Light Originals L.P.
Johns Manville
Leone Industries
Libbey Inc.
Longhorn Glass Corp.
Owens Corning
Osram Sylvania
PPG Industries–Fiberglass
Saint-Gobain Containers
Saint-Gobain Vetrotex America
Schott Glass Technologies Inc.
Society for Glass Science and Practices
Techneglas
Visteon–An Enterprise of Ford Motor Company

(GMIC Members 2001 to 2003 continued)

Associate Members:
Advanced Manufacturing Center
Air Liquide America
B.O.C.
Center for Glass Research
Eclipse Inc./Combustion Tec
Gas Technology Institute
Glass Service, Inc.
Mississippi State University (Diagnostic Instrumentation & Analysis Laboratory)
Pacific Northwest National Laboratory
Praxair, Inc.
Siemens Energy and Automation
U.S. Borax

C.3. GMIC Next Generation Melting System Task Force Members:

Hamid Abbasi, GTI
John Chumley, Techneglas
Frank Dumoulin, Praxair
Marv Gridley, Saint-Gobain Containers
Eric Helin, Saint-Gobain Containers
Aaron Huber, Johns Manville
Moe Khaleel, PNNL
Peter Krause, Siemens
Christopher Jian, OC
Robert Moore, UM-R
Rand Murnane, Corning Incorporated
Bob Newell, Siemens
John Plodinec, DIAL
Gene Ramsey, DIAL
Cheryl Richards, PPG Fiberglass
David Rue, GTI;
Tom Seward, CGR
Neil Simpson, BOC Gases
Bill Snyder, Praxair
Mike Soboroff, DOE
Mariano Velez, UM(R)
John Wells, Saint Gobain Vetrotex
Carsten Weinhold, Schott
Jim Williams, Techneglas
Dan Wishnick, Eclipse/Combustion Tec
Warren Wolf, Warren W. Wolf Jr. Services

C.4. Special Contributors

Elliott Levine, Department of Energy
Keith Jamison, Energetics
Josef Chmelar, Glass Service
L. David Pye, Dean and Professor of Glass Science Emeritus, Alfred University
Frederic Quan, Corning Incorporated
Ronald Gonterman, Plasmelt
William Prindle, glass industry consultant
David Rue, Gas Technology Institute
Phillip Sanger, Cleveland State University
Saint-Gobain SEFPRO (formerly Corhart) for furnace cut-away drawings

C.5. Automation Specialists

Dan Base, Encompass Automation & Engineering Technologies LLC
Josef Chmelar, Glass Services
Peter W. Krause, Siemens Energy and Automation Inc.
William K. Pollock, Optimation Technology Inc.
Michael V. Triassi, Optimation Technology Inc.
Mark Weihs, Encompass Automation & Engineering Technologies LLC

C.6. Resource Contacts

Many academic centers, R&D organizations, engineering firms, consultants, and manufacturers listed below assisted in the development of this report.

AEI
Air Liquide
Air Products
Alfred University
Arc International
Asahi Glass
ATC
BOC Gases
British Glass
BSN
CGR (NSF Industry-University Center for Glass Research)
Corning
Czech Institute of Inorganic Chemistry
Eclipse/Combustion Tec
Frazier Simplex
Gas Technical Institute
GE Lighting
German Glass Society, HVG
Glass Service, Inc.
Glass Technology Services Ltd.
GMIC
Gas Technical Institute Library
Guardian
H. F. Teichman

(C.6. Resource Contacts - Continued)

ICG TC-13 (Environmental Committee)
ISORCA
Kumgand Korea Chemical
Kyoto Institute of Technology
Leone Industries
Libbey Glass
Maxon
Nienburger Glas
Nippon Electric Glass Co., Ltd.
Owens Corning
Owens-Illinois
Perrier
Philips Display
Pilkington
PPG
PQ Corp.
Saint Gobain (France)
Saint Gobain Containers
Scholes Library
Science Production Enterprise (Armenia)
Sorg
Stazione Sperimentale del Vetro (Italy)
St. George Crystal
Techneglas
TECO
Thomson Multimedia
Ultramax
Vitro
Vortec, Inc.
Zippe

C.7. Editorial and Reference Assistance

Pat LaCourse, Scholes Library, New York State College of Ceramics at Alfred University
Lori Kozey, Editing Services
Nancy Lemon, Librarian, Owens Corning

Appendix D Technology Resource Directory

• JOHN T. BROWN
Technical Director
Glass Manufacturing Industry Council
455 W. Third St.
Corning, NY 14830
607 962-2011 cell 607 368 3724 FAX 607 974-2083
email: brownjt@stny.rr.com

• MICHAEL GREENMAN
Executive Director
Glass Manufacturing Industry Council
c/o ACerS, P.O. Box 6136
Westerville, OH 43086-6136
Tel: +1-614-818-9423 Cell: +1-614-439-4768 Fax: +1-630-982-5342
E-Mail: mgreenman@gmic.org <mailto:mgreenman@gmic.org>

• ELLIOTT LEVINE
US Dept. of Energy
1000 Independence Ave SW
Code EE-22
Washington, DC 20585
(202) 586-1476 FAX (202) 585-3237
email: Elliott.Levine@EE.DOE.GOV

• C. PHILIP ROSS
Glass Industry Consulting
PO Box 6730
Laguna Niguel, CA 92607-6730
(949) 493-7293 Cell (949) 510-7293 FAX (949) 493-8887
gici@cox.net

• GABE L. TINCHER
N. Sight Partners
165 Drifting Circle
Lebanon, TN 37087
(615) 443-4774
email: peasandcarrots37087@yahoo.com

• WARREN WOLF
8056 Eliot Dr.
Reynoldsburg, OH 43068
(614) 866-7050 cell (614) 404-0915
email: wwolf@insight.rr.com

BIBLIOGRAPHY

Abbott, E., "Comparison of Glass Furnace Operation with Oil and Natural Gas," *Glass Technol*., **18** [5] 143–147 (1977).
Ahmed, A. A., and A. F. Abbas, "Does Blast-Furnace Slag Improve Glassmaking?" *Glass Ind*., **65** [12] 15–18 (1984).
Akshay, M., and K. Sanjay, "Heat Recovery in a Typical Glass Tank Furnace," Glass Udyog, **12** [3] 25–35 (1984).
Albayrak, G., A. Yaraman, and E. R. Plumat, "Analysis of the Effect of Partly Reduced Silica and Sulfide on Melting Rate Improvement," *Glastech. Ber*. (Int. Glaskongr., 13th, Band 1), 56 7–12 (1983).
Alexander, J. C., "Electrostatic Batch Preheating Technology: E-Batch," *Ceram. Eng. Sci. Proc*., **22** [1] 37–53 (2001).
Alexander, J. M., and F. J. Lazet, "Directed-flow, Thin-layer Glass Fusion Process," *Ceram. Eng. Sci. Proc*., **6** [3-4] 133–141 (1985).
Ambartsumyan, A. G., G. G. Akopyan, and K. A. Kostanyan, "Glass Melting in an Electric Direct-Heated Skull Furnace," *Glass Ceram*. (Engl. Transl.), **54** [5/6] 139–140 (1997).
Angelo, J. J., "Lithium in Glass and Glass Melting," *Glass* (London), **63** [12] 447 (1986).
Anon., "Containerless Melting of Glass," Seramikkusu, **22** [4] 286–290 (1987).
Anon., "Foam Development During the Glassmelting Process," *Glastek. Tidskr*., 38 [1] 3–8 (1983).
Anon., "The Glass Furnace (A Consideration of Fuel Company)," *Sprechsaal*, **53** [7] 66 (1920).
Anon., "The Glass Melting Furnace," *Glasind*., 3I 97–98, 105–106 (1920).
Anon., "Improved Construction of Glass Melting Furnace Throats," *Glass* (London), **52** [6] 194, 6–7, 9 (1975).
Anon., "Improvement of Refining Agents for Glassmelting," *Guisuanyan Xuebao,* **7** [4] 370–379 (1979).
Anon., "Improving the Efficiency of the Regenerative Furnace," *Glass Int.,* 1990 [June] 55–59 (1990).
Anon., "Molten Glass Exchange Control–A Way to Increase the Melting Capacity of the Glass Tank," *Sklar Keram*., **30** [3] 68–71 (1980).
Anon., "New Glass Melting Technologies for Lower Costs," *Am. Ceram. Soc. Bull*., **71** [7] 1071 (1992).
Anon., "Preheating of Natural Glass in Two Glass Melting Furnaces of the Perrier Company," *Ind. Ceram*., 871 298–300 (1992).
Anon., "Radio Frequency Melting of Laser Glasses," Guisuanyan Xuebao, **7** [3] 255–261 (1979).
Anon., "Sensors Development for Glass Melting and Recycling," Ind. Heat., **61** [4] 31 (1994).
Anon., "Tank Furnaces for the Simultaneous Production of More Than One Kind of Glass," *Sprechsaal,* **49** [23] 176 (1916).
Anon., "Time-Dependent Energy Consumption by Continuous Glass Melting," *Mater. Constr.* (Bucharest), **17** [3] 182–187 (1987).
Anon., "Trends in Oxy-Fuel Furnace Design," *Glass Ind*., **79** [5] 18 (1998).
Anon., "Turning up the Heat in All Electric Glass Melting," *Glass* (London), **78** [9] 276 (2001).
Argent, D., "Bubbler Systems Can Abet Melting Operations," *Glass Ind*., **73** [4] 27–28 (1992).
Argent, R. D., "Colour Cell for High Volume Production of Green, Amber, and Clear Containers," *Glass Technol.,* **30** [1] 9–10 (1989).
Argent, R. D., "Furnace Designed for High Cullet Use," *Glass Ind.,* **71** [4] 35 (1990).
Argent, R. D., "High Cullet Glass Melting Systems," *Glass Technol.,* **31** [3] 88–92 (1990).
Argent, R. D., "Return of the Segmented Melting System," *Glass*, **71** [10] 393 (1994).
Argent, R. D., "Segmented Furnaces Slash Glass Melting Costs," *Ceram. Ind.,* **132** [4] 45 (1989).
Argent, R. D., G. W. Mattocks, and R. J. Ryder, "Examination of "Synthetic Air"—The Retrofit Alternative to Complete Redesign for Oxy/Fuel Firing," Proc. Int. Congr. Glass, 18th, 240–249 (1998).
Arrandale, R. S., "Furnaces, Furnace Design, and Related Topics [in Glass Manufacture]," *Handb. Glass Manuf*., 1974 [1] 249–386 (1974).
Ashfield, A.W.F., "Glass Furnace Design in 1978," *J. Can. Ceram. Soc*., **47** [1] 31–34 (1978).
Atkinson, C.J.S., "Furnace Review of Six Decades 1916-1976," *Glass Technol*., **17** [5] 205–220 (1976).
Bahm, W., "Promotion of Innovative Energy Technologies in the Glass Industry by the European Commission," *Glastech. Ber. Glass Sci. Technol*., **68** [9] 293–296 (1995).
Balta, P., D. Radu, and C. Spurcaciu, "Influence of the Retention Time on the Energy Expense by Glass Melting," XIV Int. Congr. Glass - Coll. Pap., 3 16–22 (1986).

Bamford, C. R., *Colour Generation and Control in Glass*, Vol. 2. Elsevier Scientific, Amsterdam, 1977. Pp. 141–164.
Bansal, B., K. F. Jones, P. M. Stephan, and J. R. Schorr, "Batch Pelletizing and Preheating," Glass (London), **56** [12] 479–487 (1979).
Bansal, N. P., and R. H. Doremus, *Handbook of Glass Properties*. Academic Press, Orlando, Fl., 1986.
Barton, J. L., "Innovation in Glass Melting," *Glass Technol*. **34** [5] 170–177 (1993).
Barton, J. L., et al., "Procede et dispositif de fusion de matieres minerales, notamment vitrifiables," French Patent 2,530,611 (26 July 1982).
Barbosa, L. C., and C.R.L. Farias, "Glass Preparation in RF [radio frequency] Furnace and Extrusion," *Ceramica* (Sao Paulo), **31** [189] 197–200 (1985).
Barbosa, L. C., and C.R.L. Farias, "Radio Frequency Melting of Glass and Extrusion of Optical Fiber Preforms," Proc. Latin Am. Tech. Symp. Glass Manuf., 3rd, 1609 (1985).
Barklage-Hilgefort, H., "Batch Preheating on Glass-melting Furnaces," *Glastech. Ber.,* **62** [4] 113–121 (1989).
Barklage-Hilgefort, H., "Situation of the Waste-Heat Utilisation in the Green Glass Industry," *Glastech. Ber.,* **63** [4] 101–110 (1990).
Barth, H., "The Fuel Consumption in Different Glass Furnaces," *Keram. Rundsch.,* **33**, 191 (1925).
Barton, J. L., et al., "Procede et dispositif pour l'elaboration de verre fondu et applications de ce dispositif," European Patent 0,135,446 (13 September 1984).
Bauer, J., Hofmann O.-R., and S. Giese, "Measurement of Convective Heat Transfer for Various Checker Systems," *Glastech. Ber., Glass Sci. Technol.,* **67** [10] 272–279 (1994).
Bauer, R. A., A. M. Lankhorst, and O. S. Verheijen, "Advanced Furnace Design Using New Oxy-Fuel Burners," Ceram. Eng. Sci. Proc., 21 [1] 1–8 (2000).
Bauer, W. C., and J. E. Bailey, "Raw Materials Batching"; pp. 378–385 in *Ceramics and Glasses, Engineered Materials Handbook*, Vol. 4. Edited by S. J. Schneider. ASM International, Materials Park, Ohio, 1991.
Bazarian, E. R., "Design Considerations for Conversion of Glass Tanks to Oxy-Fuel Combustion," *Ind. Heat.,* **61** [2] 32–34 (1994).
Becker, K., "Contribution to Heat Recovery in Glass Melting Furnaces," *Glass* (London), **52** [6] 188–190, 92–93, 99 (1975).
Becker, K., "Melting Costs of Cross-Fired Regenerative and Recuperative Tank Furnaces," *Glass Technol***. 13** [5] 145–147 (1972).
Beerkens, R., "Application of Energy Saving Technologies for Glass Furnaces. A Comparative Study," pp. 323–339 in 1992 Proceedings of the European Seminar on Improved Technologies for the Rational Use of Energy in the Glass Industry. Fachinformationszentrum Karlsruhe, Karlsruhe, Germany, 1993.
Beerkens, R., "Future Industrial Glass Melting Concepts," Int. Congr. Glass, 19th, 564–576 (2001).
Beerkins, R., "Future Industrial Glass Melting Concepts," in Proc. XIX Int. Congr. Glass, Invited Papers, CD-ROM. 2001.
Beerkens, R.G.C., A. J. Faber, H.P.H. Muysenberg, and F. Simonis, "Simulation Optimises Glass Melting Process," *Schott Inf*., **82** 10–11 (1997).
Beerkens, R.G.C., and H.P.H. Muysenberg, "Comparative Study on Energy-Saving Technologies for Glass Furnaces," *Glastech. Ber*., **65** [8] 216–224 (1992).
Beerkens, R.G.C., and J. van Limpt, "Energy Efficiency Benchmarking of Glass Furnaces," *Ceram. Eng. Sci. Proc*., **23** [1] 93–105 (2002).
Begley, E. R., "How Glass Furnace Bottom Construction Has Evolved," *Glass Ind*., **69** [10] 14–19 (1988).
Begley, E. R., and G. DuVierre, "Throat Construction: A Review of Design, Refractory, and Cooling Alternatives," *Ceram. Eng. Sci. Proc.,* **12** [3] 482–495 (1991).
Bel'yaninov, Y. N., "On Non-Linearity Accounting in Thermal Tasks of Electric Glass Melting," *Fiz. Chim. Stekla*, **17** [1] 169–173 (1991).
Belov, D. N., L. M. Maksakova, and V. G. Orlov, "Automated Intermittent Gas-fired Furnace [for Glassmelting]," *Glass Ceram.* (Engl. Transl.), **37** [12] 624–625 (1980).
Bender, D. J., J. G. Hnat, and A. F. Litka, "Pilot-Scale Testing and Preliminary Commercial System Design of a Gas-Fired Advanced Glass Melting Furnace," *Ceram. Eng. Sci. Proc*., **11** [1-2] 102 (1990).
Bender, D. J., J. G. Hnat, A. F. Litka, L. W. Donaldson Jr., D. J. Tessari, and J. R. Sacks, "Advanced Glass Melter Research Continues to Make Progress," *Glass Ind*., **72** [4] 10 (1991).
Beutin, E. F., and J. H. Leimkuehler, "Long-term Experience with Nienburger Glas Batch Preheating Systems," Ceram. Eng. Sci. Proc., 21 [1] 109–121 (2000).

Bezborodov, M. A., "The Effect of Some Minor Additives on the Fusion Temperatures of Glasses," *Glass Ceram.,* **16** [10] (1959).
Boelens, S., A. Bolder, R. van Herten, and A. Rikken, "Dutch Glassmaker's Survey of Energy Saving Technology," *Glass* (London), *69* [10] 415–420 (1992).
Boen, M., M. Ladirat, M. Bonnal, and M. D. Delage, "Induction Glass Melting in Cold Crucible," *Ind. Ceram.,* **935** 176–177 (1998).
Boettner, G. B., "Method for Fining Molten Glass," U.S. Patent 4,994,099 (17 April 1989).
Boldyrev, R. A., E. R. Ushmaikin, and V. G. Zheltov, "Glass Batch Preheating Performance: A Review," *Glass Ceram*. (Engl. Transl.), **44** [11-12] 483–489 (1987).
Bondarev, K. T., and V. V. Pollyak, "High-Temperature Melting of Glass," *Steklo Keram*., 1971 [1] 8–12 (1971).
Booth, E., "The Development and Future of Electric Melting," *Glastek. Tidskr*., **42** [2] 31–35 (1987).
Booth, E., and T. J. Harper, "Applications of Electric Boost," *Glass* (London), **71** [6] 209–210 (1994).
Bost, J., and R. Carroll, "The Use of Waste Heat Gases from a Glass Furnace to Operate a Turbine," C*eram. Eng. Sci. Proc*., **1** [1-2] 37–42 (1980).
Botvinkin, O. K., "Glass Melting in a Vacuum," *Keram. Steklo*, **11** [1] 32–33 (1935).
Boussant-Roux, Y., A. Zanoli, and C. Naturel, "Enhancement of Heat Transfer in Regenerators," *Glass Prod. Technol. Int.,* 1994 63–65 (1994).
Boussant-Roux, Y., A. Zanoli, and C. Naturel, "Improving the Heat Transfer in Regenerators," *Ind. Ceram*., 888 808–811 (1993).
Boyd, D. C., and D. A. Thompson, "Glass"; pp. 807–880 in *Encyclopedia of Chemical Technology*. Eds., R. E. Kirk, D. F. Othmer, M. Grayson, and D. Eckroth. Wiley, New York, 1978–1984.
Brown, J. R., "Batch Briqueting — A Production Trial," *Ceram. Eng. Sci. Proc*., **4** [3-4] 236–246 (1983).
Brown, T., "Electric Melting — Batch Blanket Technology," *Glass Prod. Technol. Int*., 1993 65–67 (1993).
Browning, R., and J. Nabors, "Regenerative Oxygen Heat Recovery for Improved Oxy-Fuel Glass Melter Efficiency," *Ceram. Eng. Sci. Proc*., **18** [1] 251–265 (1997).
Bunting, J. A., and B. H. Bieler, "Batch-Free Time versus Crucible Volume in Glass Melting," *Am. Ceram. Soc. Bull*. **48** [8] 781–785 (1969).
Cable, M., "Century of Developments in Glassmelting Research," *J. Am. Ceram. Soc*., **81** [5] 1083–1094 (1998).
Cable, M., "Development in Glass Melting. Scientific Background," *Glastek. Tidskr*, **29** [1] 11–20 (1974).
Cable, M., "The Development of Glass-melting Furnaces, 1850-1950," Trans.–Newcomen Soc., **71** 205–228 (2000).
Cable, M., "The Effect of Sand-grain Size and Refining Agents on Melting and Refining of Glass," Symp. Fusion Verre, C. R., 1958 253–268 (1958).
Cable, M., "Glassmaking. The Melting Process," *Glastek. Tidskr*, **24** [6] 147–152 (1969).
Cable, M., and M. Siddiqui, "Replacement of Soda Ash by Caustic Soda in Laboratory Glass Melting Trials," *Glass Technol*., **21** [4] 193–198 (1980).
Cable, M. J., "Challenge to Improve Large-scale Glassmelting," *Silikaty* (Prague), **30** [2] 155–168 (1986).
Cable, M. J., "The Possibilities of Progress in Glassmelting," *J. Non-Cryst. Solids*, **73** [1-3] 451–461 (1985).
Carroll, H. R., and J. J. Angelo, "Adding Lithium Can Improve Melting-forming Performance," *Glass Ind*., **64** [11] 14–16 (1983).
Carvalho, M. G., and F. C. Lockwood, "Thermal Comparison of Glass Furnace Operation with Oil and Natural Gas," *Glastech. Ber*., **63** [9] 233–243 (1990).
Carvalho, M. G., and M. Nogueira, "Improvement of Energy Efficiency in Glass-melting Furnaces, Cement Kilns and Baking Ovens," *Appl. Therm. Eng*., **17** [8/10] 921 (1997).
Cenacchi, G., "Method for transforming surplus mud from purification processes for civil and/or industrial recycled water into inert substances and plant for the realization of this method," European Patent 0,398,298 (17 May 1989).
Cerchez, M., T. Elena, and C. Spurcaciu, "Kinetic Assessment of the Raw Materials Glass Batch Reactivity When Using Melting Acids or Pellets," *Sprechsaal*, **118** [9] 755–756, 8 (1985).
Chamberland, R. P., D. Pörtner, T. C. Saver, and R. W. Schroeder, "Energy Recovery in 100% Oxy-Fuel Melting," *Glass* (London), **74** [8] 312, 5, 6 (1997).
Chapman, C., "State-of-the-Art of Waste Glass Melters," pp. 485–493 in *Ceramic Transactions*, Vol. 29 Advances in Fusion and Processing of Glass. ed., A. K. Varshneya, D. F. Bickford, and P. Bihuniak. American Ceramic Society, Westerville, Ohio, 1993.
Chapman, C. C., J. M. Pope, and S. M. Barnes, "Electric Melting of Nuclear Waste Glasses--State of the Art," *J. Non-Cryst. Solids*, **84** [1-3] 226–240 (1986).

Charles River Associates Incorporated, “Advanced Glass Melter Technology Assessment,” Report Prepared for the Gas Research Institute, October 1988
Chistyakov, V. A., and N. M. Pervushin, “Periodic Bubbling of Glass in Small Continuous-action Furnaces,” *Steklo Keram*., 1976 [8] 32–33 (1976).
Choudhary, M. K., “Mathematical Modeling of Transport Phenomena In Glass Furnaces: An Overview of Status and Needs,” *Verre* (Versailles), **6** [6] 14–19 (2000).
Clark, T. P., “Glass Furnace Direct Coal Firing,” *Can. Clay Ceram. Q*., **49** [2] 8, 11 (1976).
Clark-Monks, C., “Quality and Melting,” *Int. Glass Rev*., 1996 [Autumn/Winter] 73–76 (1996).
Clark-Monks, C., “Rasorite in Glass Melting Reactions,” *Glass Technol*., **13** [5] 138–140 (1972).
Cobb, J. W., “Gas Firing and Glass Industry,” *J. Soc. Glass Tech*., 1 223–238 (1917).
Cole, W. E., and R. K. Sakhuja, “A Fluidized Bed Heat Exchanger to Preheat Glass Batch,” Joint ASME/AIChE National Heat Transfer Conference, 83-HT-95 (1983).
Collignon, J., “Method of Evaluation for the Dwell-Time Analysis on Glass Melting Tanks,” *Glastech Ber,* **61** [11] 307–311 (1988).
Conradt, R., “Local Temperature Distribution and Primary Melt Formation in a Melting Batch Heap,” *Glastech. Ber*. **67** [5] 103–113 (1994).
Conradt, R., “Some Fundamental Aspects of the Relation Between Pull Rate and Energy Consumption of Glass Furnaces,” *Int. Glass J.,* **20** [108] 22–26 (2000).
Cooper, A. R., “Analysis of Glass Batch Preheating,” Riv. Stn. Sper. Vetro, 9 [5] 219–228 (1979).
Cooper, A. R., “Theory of Continuous Glassmaking. 1. Some Initial Considerations,” XIV Int. Congr. Glass — Coll. Pap., 3 1–8 (1986).
Corneck, R. H., “Heat Reclaimers Provide Energy Savings,” *Glass Ind.,* **69** [4] 31–32+ (1988).
Costa, P., “Melting Behavior of Pelletized Glass Batch,” *Glastech. Ber*., **50** [1] 10–18 (1977).
Cozac, D., et al., “Glass melting furnace,” U.S. Patent 5,078,777 (29 April 1988).
Cozzi, C., P. Blanchet, and J. Segond, “Design of a Glass Furnace Throat by Means of a Single Mathematical Model,” *Glass Technol.,* **24** [2] 63–66 (1983).
Cozzi, C., P. Blanchet, and J. Segond, “Furnace Throat and Its Functions,” *Glass Int*., **57** [3] 25-6 (1980).
Credit Lyonnois Securities, Inc., “Saint Gobain,” Security Analysts’ Report, May 1, 2002.
Ctyroky, V., “Briquetting of Glass Mixes,” *Sklarske Rozhl*., **17**, 3–10 (1940).
Daniels, M., “Melting Behavior of Glass Batches,” *Glastech. Ber.* **50** [1] 10–18 (1977).
De Saro, R., L. W. Donaldson, and C. W. Hibscher, “Fluidized Bed Glass Batch Preheater: II,” *Ceram. Eng. Sci. Proc*., **8** [3-4] 171–180 (1987).
De Saro, R., G. Ridderbusch, J. Pagliarini, L. Donaldson, and S. Panahe, “Results of Scaled Testing and Analytical Investigations of a Cullet Preheater,” *Ceram. Eng. Sci. Proc.,* **9** [3-4] 264–272 (1988).
Deutsche Bank Securities Inc., “PPG Industries, Inc.,” Security Analysts’ Report.
Di Bello, P. M., “Time to Rethink Batch Prereactions,” *Glass* (London), **69** [3] 113–114 (1992).
DMG World Media, “World Glass File,” 3rd Edition, 2002.
Doremus, R. H., *Glass Science*. John Wiley & Sons, New York, 1973.
Ducharme, R., Scarfe F, Kapadia P, and Dowden J, “The Induction Melting of Glass,” *J. Phys. D: Appl. Phys*., **24** [5] 658–663(6) (1991).
Dusdorf, W., D. Höhne, and G. Nölle, “Influencing the Melting Behavior of Glass Batches,” *Silikattechnik*, **34** [2] 35–38 (1983).
Dzieciol, C., “Granulation of Glass Batch and Process of Its Melting,” *Szklo Ceram*.**,** **29** [8] 205–209 (1978).
Dzyuzer, V., V. B. Kut'in, and N. I. Kokarev, “Increasing the Luminosity of Flame in the Glassmelting Furnace,” *Glass Ceram*. (Engl. Transl.), **36** [10] 580–582 (1979).
Ehrig, R., J. Wiegand, and E. Neubauer, "Five Years of Operational Expertience with the SORG LoNOx Melter,” *Glastech. Ber. Glass Sci. and Technol*. **68** [2] 73–78 (1995).
Elich, J. J., G. A. A. Koppers, and J. A. Wieringa, “Energy-Saving Effects of Surface-Structured Walls in a Glass Melting Furnace*,” J. Inst. Energy*, **66** 71–78 (1993).
Energetics, Inc., and Department of Energy, Office of Industrial Technologies, “Energy and Environmental Profile of the U.S. Glass Industry,” April 2002.
Engelleitner, W., “Agglomeration in the Glass Industry, an Energy and Environmental Tool,” pp. 229–242 in Vol. 32 Advances in Instrumentation. Instrument Society of America, Pittsburgh, 1977.
Enneking, C.Q.M., R. Beerkens, and A. J. Faber, “Glass Melting from Cullet-Rich Batches,” *Glass Ind*., 7**3** [8] 18–21 (1992).

Enninga, G., K. Dytrych, and H. Barklage-Hilgefort, "Practical Experience with Raw-Material Preheating on Glass Melting Furnaces," *Glastech. Ber*., **65** [7] 186–191 (1992).
Ericsson, H., "Method and device for melting meltable material," International Application WO 90/01466 (12 August 1988).
Essenhigh, R. H., "Furnace Analysis Applied to Glass Tanks," *Ceram. Eng. Sci. Proc.,* **6** [3-4] 121–132 (1985).
Faber, A. J., R. G. C. Beerkens, and H. de Waal, "Thermal Behaviour of Glass Batch on Batch Heating," *Glastech. Ber.,* **65** [7] 177–185 (1992).
Fassbender, Alex G., "Reduced Capital and Operating Cost Forecast from Innovative Melting Process," *Glass Int.,* June 1991, 39–41.
Fedorov, A. G., and R. Viskanta, "Radiative Transfer in a Semitransparent Glass Foam Blanket," *Phys. Chem. Glasses*, **41** [3] 127–135 (2000).
Ferguson, A., "A New Method of Glass Melting," *J. Soc. Glass Technol*., **7**, 334–340 (1923).
Figurovskii, I. A., V. A. Abramov, and B. I. Figurovskii, "Perfecting Electric-arc Melting of Lead Crystal Glass," *Glass Ceram.* (Engl. Transl.), **38** [11] 586–588 (1981).
Fleischmann, B., "All-Electric Glass Melting Furnaces in Germany," *Glastech. Ber*., **67** [12] N157-N61 (1994).
Fletcher, J. V., and D. C. Gillman, "Electric Melting System Update," *Ceram. Eng. Sci. Proc*., **5** [1-2] 96–100 (1984).
Fokin, V. V., V. I. Kondrashov, N. A. Khovanskaya, and Y. V. Zverev, "Operation of a Glass-melting Furnace with a Heat-Insulated Melting Tank," *Glass Ceram*. (Engl. Transl.), **57** [1/2] 43–44 (2000).
Frearson, J. P., and J. Uren, "Investigations of a Ground Granulated Blast Furnace Slag Containing Merwinitic Crystallization," pp. 1401–1421 in Vol. 2 Fly Ash, Silica Fume, Slag, and Natural Pozzolans in Concrete, Proceedings — 2nd. Edited by V. M. Malhotra. American Concrete Institute, Detroit, 1986.
The Freedonia Group, "Beverage Containers to 2005," Market Research Study, 2001.
The Freedonia Group, "Flat Glass to 2005," Market Research Study, June 2001.
The Freedonia Group, "Food Containers to 2005," Market Research Study, June 2001.
The Freedonia Group, "World Insulation to 2004," Market Research Study, January 2001.
The Freedonia Group, "Insulation to 2004," Market Research Study, April 2000.
The Freedonia Group, "Glass Fibers to 2005," Market Research Study, 2001.
Freidberg, J. P., A. J. Shajii, K. W. Wenzel, and J. R. Lierzer, "An Electrodeless Melter for Vitrification of Nuclear Waste," Mater. Res. Soc. Symp. Proc., 465 33–38 (1997).
Friedmann, W., "Some Technical Proposals and Data for an Examination of the Thermal Performance of Glass-Melting Tanks," *J. Soc. Glass Technol*., **20** 596–639 (1936).
Frolow, P., and F. G. Heinz, "Influence of Different Al_2O_3-containing Batch Materials on Melting, Fining and Properties of Soda-lime-silica Glass," *Glastech. Ber.,* **66** [6/7] 143–150 (1993).
Galewicz, M., and W. Hejnar, "Benefits of Nepheline Syenite in Technical Glass Melting," *Glass* (London), **69** [2] 71 (1992).
Gardon, R., "Some Heat Transfer Problems in Glass Technology," Int Congr. Glass, 8th, 1, 85–95 (1970).
Gavryutin, P. G., and L. V. Lipinskaya, "Small-scale 3-sectional Direct-heating Glassmelting Furnace," *Glass Ceram*. (Engl. Transl.), **37** [7] 359–360 (1980).
Gell, P.A.M., "Furnace for Tomorrow in Operation Today," *Glass Technol*., **25** [3] 148–151 (1984).
Gettings, M., "New Developments in Energy Management, Heat Recovery and Recuperation," pp. F1–F23 in Improving Efficiency in Thermal Processing, 4th Furnaces, Refractories Heat Treatment Fuel Economy Exhibition. Fuel & Metallurgical Journals, England, 1982.
Gillman, D. C., "Different Approach to Electric Melting," *Glass Ind*., **64** [3] 17–20 (1983).
Glass Manufacturing Industry Council and Department of Energy, Office of Industrial Technologies, Glass: Industry of the Future — Resources & Tools for Energy Efficiency & Cost Reduction Now. CD-ROM, 2000.
Gorina, I. N., A. N. Oleinikova, and V. I. Romanov, "Intensification of Glassmelting Process during the Production of Sheet Glass," *Glass Ceram.* (Engl. Transl.), **36** [7] 356–357 (1979).
Gotz, J., "Effect of Fluorides on Melting and Properties of Glass Melts," Int Congr on Glass, 10th, Proc, 2.132–2.140 (1974).
Gridley, M., "Philosophy, Design and Performance of Oxy-Fuel Furnaces," *Am. Ceram. Soc. Bull.,* **76** [5] 53–57 (1997).
Grisham, S., "GRI picks Alfred for glass melting research," *Am. Glass Rev*. **111**, pp. 4, 9 (1991).
Groom, C., "Electric Boost Design for Float Glass Furnaces," *Glass Ind*., **80** [6] 10 (1999).
Gunther, R., "Melting of Glass with Gas from Coal," *Glastech. Ber.,* **56** [10] 261–268 (1983).

Gushchin, S. N., V. B. Kutin, and P. N. Bodnar, "Improvement of Thermal Operations of Glass-melting Furnaces," *Glass Ceram*. (Engl. Transl.), **57** [5/6] 190–192 (2000).
Gushchin, S. N., V. G. Lisienko, V. B. Kutin, and P. N. Bodnar, "Improvement of Operation of Open-Flame Glass-melting Furnaces, A Review," *Glass Ceram*. (Engl. Transl.), **58** [1/2] 39–42(4) (2001).
Hakes, S. C., "New Approach to Melting Ultrahigh Quality Glasses Demanded by New Communications Technology," *Int. Glass J*., **21** [111] 26–28 (2001).
Hamilton, J. C., "Applied Research in Glass Melting," *Ind. Eng. Chem.,* **62** [2] 16–21 (1970).
Hammel, J. J., "Some Aspects of Tank Melting"; pp. 177–185 in Commercial Glasses, Advances in Ceramics, vol. 18. Edited by David C. Boyd and John F. MacDowell. American Ceramic Society, Westerville, Ohio, 1986.
Hampton, W. M., "Development of Siemens Furnaces for Glass Melting," *Chem. Ind.* (London), 1960 598–609 (1960).
Harper, T., D. Jones, H. Knighton, and J. Shea, "The Economics and Practicality of a Change to Coal as an Energy Source for Glassmaking," *Glass Technol.,* **23** [1] 44–51 (1982).
Hayes, J. C., "Laboratory Methods to Simulate Glass-Melting Processes," pp. 141–148 in *Advances in the Fusion of Glass*. Edited by D. F. Bickford. American Ceramic Society, Westervillle, Ohio, 1988.
Heide, K., R. Franke, H. Schmidt, and R. Straussberger, "Investigation of the Energy Expended in Heating Glass Raw Materials to the Melting Temperature," *J. Therm. Anal.,* **33** [3] 615–618 (1988).
Hench, L. L., and H. F. Schaske, *Introduction to Glass Science*. Plenum Press, New York, 1972.
Herzog, J., "Recovering Waste Heat for Cullet Preheating," *Glass* (London), **67** [5] 195 (1990).
Herzog, J., and R. J. Settimo, "Energy-Saving Cullet Preheater," *Glass Ind.,* **73** [10] 36–39 (1992).
Hess, M., "How Increased Cullet Levels Affect Energy Usage," *Glass Ind*., **74** [1] 24 (1993).
Hibscher, C. W., L. W. Donaldson, Jr., and R. DeSaro, "The Fluidized Bed Glass Batch Preheater," *Ceram. Eng. Sci. Proc*., **7** [3-4] 482–494 (1986).
Hnat, James G., William F. Talley, and Leonard M. Barlone, "Coal-Fired Cyclone Melting System [for glass manufacture]," *Glass*, **10**, 407–413 (1990).
Hohman, C. M., et al., "Method and apparatus for heating glass batch," U.S. Patent 4,319,903 (27 August 1980).
"How the Advanced Glass Melter Compares with Conventional Furnaces," *Glass Ind.* **69**, pp. 6, 19–23 (1988).
Howie, F. H., and I. G. Sayce, "Plasma Heating of Refractory Melts," *Rev Int Hautes Temp Refract*, **11** [3] 169–176 (1974).
Hoyle, C. J., "Regenerators - Is It Worth a Second Pass?" *Glass* (London), **64** [4] 145–146 (1987).
Hrma, P., "Glassmelting in 2004," *J. Non-Cryst. Solids*, **73** [1-3] 501–515 (1984).
Hrma, P., "Melting of Foaming Batches: Nuclear Waste Glass," *Glastech. Ber*. **63K**, 360–369 (1990).
Hrma, P., "Thermodynamics of Batch Melting," *Glastech. Ber*. **55** [7] 138–150 (1982).
Hrma, P., M. J. Schweiger, G. F. Piepel, P. E. Redgate, J. D. Vienna, and D. E. Smith, "Prediction of Nuclear Waste Glass Dissolution as a Function of Composition"; pp. 497–504 in Environmental Issues and Waste Management Technologies in the Ceramic and Nuclear Industries, *Ceramic Transactions*, Vol. 61. Edited by V. Jain and R. Palmer. American Ceramic Society, Westerville, Ohio, 1995.
Hrma, P., M. J. Schweiger, G. F. Piepel, D. E. Smith, P. E. Redgate, J. D. Vienna, and D.-S. Kim, "Prediction of Processing Properties for Nuclear Waste Glasses," pp. 505–513 in Environmental Issues and Waste Management Technologies in the Ceramic and Nuclear Industries, Ceramic Transactions, Vol. 61. Ed., V. Jain and R. Palmer. American Ceramic Society, Westerville, Ohio, 1995.
Hull, J. D., "Alternative Regenerator Systems for the 90'S," *Glass Ind*., **74** [4] 18–20 (1993).
Hutchins, J. R., III, and R. V. Harrington, "Glass"; in *Encyclopedia of Chemical Technology*. Ed., R. E. Kirk, D. F. Othmer, H. F. Mark, and A. Standen. Wiley-Interscience, New York, 1963–1970.
Il'inskii, V. A., I. V. Kozlovskaya, and A. D. Al'ter, "Planning Electric Gas Melting Furnaces," *Glass Ceram*. (Engl. Transl.), **42** [11] 474–477 (1985).
Il'inskii, V. A., Y. Murav'ev, and G. V. Pavlovskii, "High-productivity Glassmelting Tank Furnace with Drawing Channel," *Glass Ceram.* (Engl. Transl.), **40** [1] 26–30 (1983).
Illig, H.-J., "Fifteen Years of Research and Development in Electric Glassmelting," Silikattechnik, 32 [1] 8–10 (1981).
Itoh, H., R. Kitamura, T. Kawaguchi, and Y. Takei, "Refining under Sub-Atmospheric Pressure and Its Effect on Reducing Energy Consumption," presented at the Annual Meeting of the American Ceramic Society, April 2002.
Itten, S.J.S., "Super Efficiency in Glass Melting," *Glass Udyog*, **11** [3] 17-22 (1982).
Jack, H.R.S., and J.A.T. Jaquet, "Heat Transfer in Glass Batch Materials," Symp. Fusion Verre, C. R., 339–360 (1958).

Kawachi, S., M. Kato, and Y. Kawase, "Evaluation of Reaction Rate of Refining Agents," *Glastech. Ber. Glass Sci. Technol.,* **72** [6] 182–187 (1999).
Kazanskii, M. S., and I. G. Klochkov, "Briquetting of Glass Batches," *Stekol'naya,* 1939 [7] 15–17 (1939).
Keijts, G., and K. Van der Werff, "Heat Transfer in Glass Container Production During the Final Blow," *Glass Technol*., **42** [3] 104–108 (2001).
Kiefer, W., and H.-G. Krolla, "Cold-Wall Melting Experiments with High-Frequency Induction Melting," Proc. SPIE, 2287 40–46 (1994).
Kircher, U., "Advantages of the Emission Reduction of Glass Melting Furnaces in the Last 25 Years — A Survey," Int. *Glass J.,* **20** [110] 21–26 (2000).
Kirsch, R., S. Holy, and J. Michalec, "Melting Glass in the Inductive Crucible Furnace: I," *Sklar Kera*m., **29** [7] 197–199 (1979).
Kirsch, R., S. Holy, and J. Michalec, "Melting Glass in the Inductive Crucible Furnace: II," *Sklar Keram*., **29** [8] 238–240 (1979).
Kirsch, R., S. Holy, and J. Michalec, "Melting Glass in the Inductive Crucible Furnace: III," *Sklar Keram*., **30** [11] 311–315 (1980).
Kirsch, R., and J. Michalec, "Thermal Processes in Open and Closed Platinum Furnaces with Induction Heating," *Am Ceram Soc Bull*, **66** [8] 1254–1256 (1987).
Kiselev, V. I., and N. A. Pankova, "Fining Glass in a Direct-Current Glass-melting Furnace," *Glass Ceram*. (Engl. Transl.), **41** [11-12] 527–531 (1984).
Kiselev, V. N., T. M. Strueva, and S. S. Denisova, "Single-flow Glassmelting Furnace," *Glass Ceram. (*Engl. Transl.), **37** [9] 453–455 (1980).
Kislitsyn, B., V. Dovbnya, L. Chaus, N. Zhur'yari, and G. Zhivenkova, "Methods of Preventing Incomplete Melting in Flat Glass," *Glass Ceram.* (Engl. Transl.), **40** [5-6] 269–270 (1983).
Kitaigorodskii, I. I., "Acceleration of the Melting of Glass," *Keram. Steklo***, 5**, 362–363 (1929).
Kitamura, N., M. Makihara, and M. Motokawa, "Containerless Melting of Glass by Magnetic Levitation Method," J*pn. J. Appl. Phys***., 39** [4A] L324–L326 (2000).
Kiyan, V. I., P. A. Krivoruchko, and A. B. Atkarskaya, "Internal Reserves for Enhancing the Efficiency of Glass-melting Furnaces," G*lass Ceram*. (Engl. Transl.), **56** [7/8] 241–244 (1999).
Klein, V., "The Fining of Glass Melts by Sound Waves," *Glastech. Ber.,* 16 [7] 232–233 (1938).
Klouzek, J., N. Lubomir, and U. Jiri, "Modelling of the Refining Space Working under Reduced Pressure," *Glastech. Ber. Glass Sci. Technol*., **73** [11] 329–336 (2000).
Knap, Z., A. Lis, K. Szczepanski, and M. Zabicki, "Possibility of Fluid Bed Drying of Sand Using Heat from the Combustion of Flue Gases," *Szklo Ceram.,* [1] 9–10 (1992).
Knapp, O., "Briquetting and Granulation of Glass Mixtures," *Glas-Email-Keramo-Tech*., **25** [5] 166–169 (1969).
Knox, M. P., and G. J. Copley, "Use of Microwave Radiation for the Processing of Glass," *Glass Technol*., **38** [3] 91–96 (1997).
Kocho, V. S., A. I. Kukarkin, P. I. Brin'ko, V. A. Myagkov, I. Z. G. Fedorov, S. L., N. L. Shevchenko, and N. N. Kovshar, "Determination of the Efficiency of Glass Furnace Regenerators," *Steklo Keram*., 1975 [10] 5–6 (1975).
Kopser, G. J., "Summary of Twenty-Five Years of Glass Furnace Preheating," Ceram. Eng. Sci. Proc., 12 [3-4] 460–472 (1991).
Kosa, L., K. Kazda, M. Kriz, and I. Proks, "Theoretical Specific Heat Consumption in the Melting of Some Commercial Glasses: I," *Silikaty* (Prague), **26** [4] 327–333 (1982).
Kosa, L., K. Kazda, M. Kriz, and I. Proks, "Theoretical Specific Heat Consumption in the Melting of Some Commercial Glasses: II," *Silikaty* (Prague), **27** [1] 31–38 (1983).
Kostanyan, K. A., A. F. Melik-Akhnazarov, A. R. Akopyan, V. S. Dzhamalyan, and A. A. Khalatyan, "Electromelting of Pyrex Glass in a Furnace of Improved Construction," *Glass Ceram*. (Engl. Transl.), **34** [8] 492–495 (1977).
Koster, J., and G. Schwarz, "Direct Firing of Liquefied Petroleum Gas," *Glass Prod. Technol. Int.*, 1992 59–61 (1992).
Koz'min, M. I., V. I. Babich, and N. A. Pankova, "Experimental Furnace with Gas Combustion in the Melt and Thin-Layer Fining," *Glass Ceram*. (Engl. Transl.), **31** [9-10] 623–625 (1974).
Kozlov, A. S., S. B. Lisenenkova, I. A. Gusev, E. T. Mosolov, Y. M. Miroshnikov, and V. A. Tolstov, "Hydrodynamics of the Glass in a Regenerative Furnace," *Glass Ceram.* (Engl. Transl.), **41** [1-2] 51–56 (1984).
Kozlov, A. S., L. P. Shutnikova, R. S. Kotselko, and V. E. Dunduchenko, "Energy Balance of Glass-melting Furnaces," *Glass Ceram*. (Engl. Transl.), **42** [12] 535–539 (1985).

Krause, W., “Glass-melting Strategies at Oberland Glass [Germany],” *Glass Int.,* 1990 [June] 49–51 (1990).
Kucheryavyi, M. N., O. N. Popov, and V. A. Polevov, “Efficient Construction and Conditions of Use of a Glassmaking Furnace Throat,” *Glass Ceram.* (Engl. Transl.), **42** [5] 221–224 (1985).
Kuczmarski & Associates, Inc., “Glass Melting Industry Overview and Assessment of AGM Market Potential: Final Report.” Prepared for the Gas Research Institute, May 17, 1995
Kurkjian, C. R., and W. R. Prindle, “Perspectives on the History of Glass Composition,” *J. Am. Ceram. Soc.*, **81** [4] 795–813 (1998).
Kut’in, V. B., S. N. Gushchin, and V. G. Lisienko, “Heat Exchange in the Cross-Fired Glass Furnace,” *Glass Ceram.* (Engl. Transl**.), 54** [5/6] 172–174 (1997).
Lauritzen, O., and S. Urnes, “Window Glass Melting Studies,” *Glastek. Tidskr*., **29** [2] 31–38 (1974).
Lebedev, V. I., and Y. V. Shklyar, “Calculation of Complex Heat Transfer in Glass-Melting Furnaces.,” *Izv. Vyssh. Uchebn. Zaved., Energ*., **9** [12] 67–70 (1966).
LeBlanc, J., R. Marshall, G. Prusia, T. Clayton, A. Richardson, and N. Simpson, “The BOC Convective Glass Melting System,” *Ceram. Eng. Sci. Proc.,* **23** [1] 107–118 (2002).
Leimkuhler, J., “Preheating of Raw Material for Glass Furnaces,” *Glass Prod. Technol. Int*., 1991 31–32 (1991).
Leimkuhler, J., “Raw Material Preheating and Integrated Waste Heat Utilisation in the Glass Industry,” *Sprechsaal*, **125** [5] 292–298 (1992).
Levitin, L. Y., B. Y. Ten, and L. M. Protsenko, “Reserves of Glass-Melting Intensification,” *Glass Ceram*., **46** [6] 211–215 (1989).
Levy, P.-E., et al., “Technique de fusion electrique du verre,” French Patent 2,599,734 (6 June 1986).
Lewins, J., “Basic Concepts of Glass Furnace Design,” *Glass* (London), **72** [10] 395–398 (1995).
Lewins, J., “Pollution Control Options for Glass Furnaces,” *Glass Prod. Technol. Int*., 1992 47–50 (1992).
Lievre, K., R. Hewerson, B. Hoke, and J. Inskip, “Recent Developments in Oxy-Fuel Firing for Glass Melters,” *Glass Ind., 82* [3] 25–31 (2001).
Lifanov, F. A., S. V. Stefanovskii, A. P. Kobelev, and O. N. Tsveshko, “Crucible Induction Furnace for Glass Melting,” *Glass Ceram*., 1991 [7] 288–290 (1991).
Lingscheit, J. N., “Laboratory Study of Calumite as a [Glass-]Melting and Fining Accelerant,” *J. Can. Ceram. Soc*., **57** [2] 44–48 (1988).
Lisienko, V. G., V. B. Kut'in, S. N. Gushchin, and V. Kryuchenkov Yu, “Provisions for Intensification of Heat Transfer in Regenerative Tank Furnaces for Container Glass Melting,” *Glass Ceram*. (Engl. Transl.), **55** [7/8] 236–240 (1998).
Lisovskaya, G. P. and V. A. Senatova, “Model for Melting in a Glass Furnace,” *Glass Ceram.* (Engl. Transl.), *47* [5-6] 205–209 (1991).
Litvaskovskii, A. A., “Briquetting the Glass Batch,” *Prom-st. Stroit. Mater.,* 1940 60-5 (1940).
Lubitz, G., “Oxy-Fuel Melter with Batch and Cullet Preheater,” *Glastech. Ber. Glass Sci. Technol.,* **72** [1] 21–24 (1999).
Madivate, C., F. Mueller, and W. Wilsmann, “Thermochemistry of the Glass Melting Process - Energy Requirement in Melting Soda-Lime-Silica Glasses from Cullet-containing Batches,” *Glass Sci. Technol.*, **69** [6] 167–178 (1996).
Maletzki, K.-H., “Intensification of the Glassmelting Process by Batch Pretreatment,” *Silikattechnik*, **33** [5] 149–153 (1982).
Manring, W., and R. Davis, “Controlling Redox Conditions in Glass Melting,” *Glass Ind***., 59** [5] 13–16, 23, 24, 30 (1978).
Manring, W. H., “Oxidation-reduction Influences on Glass Furnace Operations,” *J. Can. Ceram. Soc*., **43** [2] 59–63 (1974).
Manvelyan, M. G., A. F. Melik-Ankhazaryan, K. A. Kostanyan, and S. O. Halchadzhyan, “The Use of Graphite Electrodes in Electric Glass-Melting Furnaces,” *Steklo Keram*., **13** [7] 1–7 (1956).
Martlew, D., “Glass melting,” European Patent 0,403,183 (13 June 1989).
Matej, J., and J. Stanek, “Electric Glass Melting with Low-frequency Current,” *Glastech. Ber*., **61** [1] 1–4 (1988).
Mattmuller, R., et al., “Perfectionnement a la fabrication du verre,” French Patent 2,281,902 (14 August 1974).
Mattocks, G. R., “Use of Synthetic Air for Combustion in Regenerative Furnaces,” *Glass Technol*., **39** [5] 148–156 (1998).
Matveev, V. A., I. S. Il'yashenko, A. B. Zhimalov, V. V. Maksimov, and I. B. Smulyanskii, “Rational Fuel Use in Glass Furnaces,” *Glass Ceram.* (Engl. Transl.), [5] 185–188 (1991).
Maurach, H., “Glass Furnaces in the Olden Time,” *Glass Ind.,* **16** 19–21 (1935).
Mazurin, O. V., *Properties of Glass and Glassy Melts*, Vols. 1–4. Science, Leningrad, 1979–1980.

McCauley, R. A., "Evolution of Flat Glass Furnace Regenerators," *Glass Ind*., **59** [10] 26–28 (1978).
McGrath, J. M., "Preheating Cullet While Using the Cullet Bed as a Filter for Waste Gases in the Edmeston Heat Transfer/Emission Control System," *Glass Technol*., **37** [5] 146–150 (1996).
McMahon, A., and M. Ding, "Can Partial Conversion to Oxy-Fuel Combustion Be a Solution to Furnace Problems," *Glass Ind*., **75** [13] 23–24 (1994).
McNeill, K. R., "Feeding glass to melting furnace," U.K. Patent 2,243,674 (26 April 1990).
Meerman, W., T. van Rooy, and M. Voss, "Continuous Skull-Melting of Glass," *Philips Tech. Rev*., **42** [3] 93–96 (1985).
Mel'nichenko, L. G., "Experimental Study of Sintering and Silicate Formation in a Glass Charge," *Steklo, Inform. Byul. Vses. Nauchn. -Issled. Inst. Stekla*, **2**, 56–61 (1961).
Michalowski, A., R. Wozniacki, and J. Myslinski, "Melting of Glass in Gas-fired Tank Furnaces: I, Modeling of the Melting Process," *Szklo Ceram.,* **30** [12] 304–307 (1979).
Michalowski, A., R. Wozniacki, and J. Myslinski, "Melting of Glass in Gas-Fired Tank Furnaces: II, Modeling of Melting, Including the Less-Used Thermodynamic Parameters," *Szklo Ceram*., **31** [1] 3–6 (1980).
Michalowski, A., R. Wozniacki, and J. Myslinski, "Melting of Glass in Gas-fired Tank Furnaces: III, Calculation of the Process," *Szklo Ceram.,* **31** [2] 39–42 (1980).
Michalowski, A., R. Wozniacki, and J. Myslinski, "Melting of Glass in Gas-fired Tank Furnaces: IV, Influence of Thermal Parameters on the Efficiency of Melting," *Szklo Ceram*., **31** [3] 66–69 (1980).
Miller, H. R., and K. Royds, "The Use of Oxygen in Glassmaking Furnaces," *Glass Technol*, **14** [6] 171–181 (1973).
Mills, H. N., "What You Should Know about Fining," *Glass Ind.,* **68** [13] 10, 13–14 (1987).
Min'ko, N., S. Zaitsev Yu, N. Zaitseva, R. Bilinskii, and M. Shershnev Yu, "Evaporation Cooling of Glass-Melting Furnaces (A Review)," *Glass Ceram*., **57** [5/6] 187–189 (2000).
Moreau, J. C., C. Cozzi, and P. Bony, "Behaviour of Cruciform Shapes in an End-port Furnace--Results after One Campaign," *Glass Udyog*, **14** [2] 25–28 (1985).
Moreau, R., and P. Bony, "Developments in the Performance and Profitability of Hollow Glass Furnaces in the Last 25 Years," *Glass Int*., 1986 39, 40, 43 (1986).
Moreau, R., and P. Jeanvoine, "Developments in Electric Furnaces and High-Performance Construction Techniques," *Glass Int.,* 1987 47–48, 51, 53 (1987).
Morellisen, H. W., A. H. M. Rikken, and A. J. M. Van Tienen, "Pelletized Batch--Its Manufacture and Melting Behavior," *Glass Ind*., **61** [3] 16–20 (1980).
Morey, G. W., *The Properties of Glass*, 2nd ed. Reinhold Publishing, New York, 1954.
J. P. Morgan, "Glass Industry Analysis," Security Analysts' Report, February 26, 1999.
J. P. Morgan, "Saint Gobain," Security Analysts' Report, November 27, 2001.
Morgan Stanley, "Owens Illinois," Security Analysts' Report, April 24, 2002.
Moser, H., "Economics of Batch and Cullet Preheating," *Ceram. Eng. Sci. Proc*., **16** [2] 105–108 (1995).
Motokawa, M., "New Technology I: Melting Floating Glass (Magnetic Levitation)," *Look Japan*, **46** [532] 30–31 (2000).
Murray, R., *The Melting of Glass by Electricity, A Bibliography*. NYS College of Ceramics, Alfred University, Alfred, N.Y., 1962.
Nagulevich, K. V., Y. I. Kolesov, and M. S. Aslanova, "Regulation of Gas Content and Temperature of Glass Foaming in the Production of Glass Fiber," *Steklo Keram*., **27** [11] 23–26 (1970).
Nalpenko, V. E., "The Automatic Wetting of (Glass) Mixtures," Steklo Keram., **15** [10] 43–44 (1958).
National Association of Home Builders.
Naumann, R. J., and E. C. Ethridge, "Acoustic Levitation Furnace Proposed for Containerless Processing," *Am. Ceram. Soc. Bull*., **64** [10] 1349–1350 (1985).
Navarro, J.M.F., "Characteristics of the Raw Materials for Melting Different Types of Glass," *Bol. Soc. Esp. Ceram. Vidrio*, 1989 [6] 449–460 (1989).
Naveaux, R. J., and J. J. Shea, "Method for Improving Regenerative Furnace Efficiency," *Glass Ind.*, **63** [1-2] 14–19 (1982).
Nebel, R., "Application of the Fining Shelf to Furnace Melting Technology," *Ceram. Eng. Sci. Proc*., **22** [1] 21–26 (2001).
Nebel, R., "Reduction of Energy Input and Environmentally Relevant Emissions in Glass Melting Furnaces," *Gaswaerme Int.,* **48** [12] 722–727 (1999).
Nebel, R., "Refining Bank," *Glass Ind*., **82** [1] 17–20 (2001).

Nemec, L., "Energy Consumption in the Glass Melting Process Part 1. Theoretical Relations," *Glastech. Ber. Glass Sci. Technol.,* **68** [1] 1–10 (1995).
Nemec, L., "Energy Consumption in the Glass Melting Process Part 2. Results of Calculations," *Glastech. Ber.,* **68** [2] 39–50 (1995).
Nemec, L., "Intensification of Glassmelting by Bubbling: I*," Sklar Keram.,* **29** [3] 67–70 (1979).
Nemec, L., "Intensification of Glassmelting by Bubbling: II, Influence of molten Glass stirring on the Rate of SiO2 Particle Solution," *Sklar Keram*., **29** [4] 103–105 (1979).
Nemec, L., "Intensification of Glassmelting by Bubbling: III, Utilization of Molten Glass Stirring in the Technologic Scale," *Sklar Keram.,* **29** [5] 144–148 (1979).
Nemec, L., "Intensification of Glassmelting by Bubbling: IV, Increase of the Refining Zone Capacity," *Sklar Keram*., **29** [6] 176–178 (1979).
Nemec, L., "Refining and Sand Dissolution in the Glassmelting Process," *Ceram.*–**Silik., 36** [4] 221–231 (1992).
Nemec, L., "Energy Consumption in the Glass Melting Process, Part 2, Results and Calculations," *Glastech. Ber. Glasss Sci. Technol*. **68** [2] 39–50 (1995).
Nemec, L., and J. Lubas, "Simple Model of Refining in Glass Melting Furnace with Vertical Flow and Covered Level," *Ceram.–Silik*., **37** [1] 35–42 (1993).
Nemec, L., and J. Matej, "Some New Aspects of Glass Melting," *Sci. Prog***., 79** [4] 261 (1996).
Nemec, L., and M. Muhlbauer, "Mathematical Model of Bubble Behavior during Refining of Glass Melts," *J. Non-Cryst. Solids* **38&39**, 593–598 (1980).
Nemec, L., P. Schill, and J. Chmelar, "Glass Refining at Reduced Pressures," *Glastech. Ber*. **65** [5] 135–141 (1992).
Nezhentsev, V. V., V. A. Khar'yuzov, and A. A. Zhilin, "Melting Optical Glasses in High-frequency Furnaces," *Glass Ceram.* (Engl. Transl.), **45** [5] 182–185 (1988).
Nezhentsev, V. V., Y. B. Petrov, A. A. Zhilin, and O. S. Dymshits, "Use of Induction Furnaces with a Cold Crucible for Melting Hard Glasses (Review)," *Glass Ceram.* (Engl. Transl.), **43** [9-10] 391–396 (1986).
Nixon, J. S., "Apparatus for melting glass batch material," U.S. Patent 5,057,140 (13 June 1988).
Noiret, R., et al., "Procede et dispositif de fusion, d'affinage et d'homogeneisation de verre, et leurs applications," French Patent 2,550,523 (9 August 1983).
Nordyke, J. S., "Advances in Melting of Lead Glass," pp. 53.1-.4 in *Advances in the Fusion of Glass.,* ed., D. F. Bickford. American Ceramic Society, Westervillle, Ohio, 1988.
Nycz, J. A., and D. T. Sturgill, "Waste Heat Recovery Boiler on a Glassmelting Furnace," *Glass Ind.,* **61** [6] 12–14 (1980).
Olabin, V. M., L. S. Pioro, A. B. Maximuk, M. J. Khinkis, and H. A. Abbasi, "Submerged Combustion Furnace for Glass Melts," *Ceram. Eng. Sci. Proc***. 17** [2] 84–92 (1995).
Olabin, V. M., and R. P. Polevoi, "Melting Granules in a Furnace with Crown Jet Burners," *Glass Ceram*. (Engl. Transl.), **39** [2] 63–68 (1982).
Orudzhev, F. M., A. M. Imanov, B. G. Varshal, N. E. Ismailov, and A. M. Muradov, "New Form of Alkali-Containing Raw Material," *Glass Ceram.* (Engl. Transl.), **44** [1] 10–12 (1987).
Pabst, R., "Experience with Cullet Preheating at Vetropack Plant in Saint-Prex (Switzerland)," *Ind. Ceram. Verriere*, **891** [3] 179–180 (1994).
Pacovsky, V., "Glassmelting Recuperative Tank Furnace without Internal Crown," *Sklar Keram.,* **34** [10] 295–297 (1984).
Pastor, A. A., and V. Dobrosavljevic, "Melting of the Electron Glass," *Phys. Rev. Lett*., **83** [22] 4642 (1999).
Pchelyakov, K. A., "Thermohydrodynamic Methods for Accelerating the Glassmelting Processes," *Glass Ceram*. (Engl. Transl.), **37** [5] 228-31 (1980).
Pecoraro, G. A., et al., "Transparent infrared absorbing glass and method of making," U.S. Patent 4,792,536 (29 June 1987).
Pellet, F. G., et al., "Precede et appareil pour fondre et affiner rapidement le verre," French Patent 2,201,261 (27 September 1973).
Penberthy, L., "Electric Furnace for Nuclear Waste Glass," *Ceram. Eng. Sci. Proc*., **5** [1-2] 87–91 (1984).
Peterson, S., "2001 Glass Industry Forecast," Glass Ind., 82 [1] 11–13 (2001).
Piepel, G. F., P. Hrma, and J. D. Vienna, "Glass Chemistry Development Strategy for Hanford High-Level Waste"; in *Science and Technology for Disposal of Radioactive Tank Wastes*. Ed., W. W. Schulz and N. J. Lombardo. Plenum, New York, 1998.
Pieper, H., "Building Glass Melting Furnaces Today—The Challenges of Energy Conservation and Environmental Protection," *Glastech. Ber. Glass Sci. Technol***., 70** [8] N117–N124 (1997).

Pieper, H., “Flexible Melting Furnace Concept,” *Glass* (London), **66** [10] 380, 383 (1989).
Pieper, H., “Furnace Costs Compared for Nine Different Melters,” *Glass* (London), **70** [1] 20–22 (1993).
Pieper, H., “Large End-fired Furnaces with a Melting Area of 100 m2 and More,” *Glastech. Ber., Glass Sci. Technol*., **67** [3] 65–70 (1994).
Pieper, H., “The Flex Melter: A New Melting Furnace for the Glass Industry, 2. An Alternative to Pot Furnaces,” Glastech. Ber. Sonderband LXIIIK, Int. Conf. Fusion Process. *Glass*, pp. 144–156 (1990).
Pieper, H., “Initial experience with the ecologically beneficial recuperative furnace LoNOx melter,” pp. 190–193 in XV International Congress on Glass, Vol. 3b. Leningrad, 1989.
Pieper, H., “Verfahren zum Verglasen von Kohlenstoff oder andere brennbare Bestandteile enthaltenden Abfallstoffen wie Schlamme und Aschen, insbesondere Klarschlamm, und Glasschmelzofen,” German Patent 40 00 147 (4 January 1990).
Pieper, H., T. Platzer, and J. Beucher, “Comparison of Ecological and Economic Aspects of a Modern Regenerative End-Fired Furnace and the Second Generation SORG LoNOx Melter,” *Glastech. Ber. Glass Sci. Technol.,* **68** [7] 241–245 (1995).
Pike, W. G., J. J. Shea, and L. R. McCoy, “The Evolution of Float Glass Furnaces,” *Glass* (London) **69** [2] 65–69 (1992).
Pilkington, A., “History of the Flat Glass Industry Is the Story of Manufacturing Processes,” *Glass Ind.,* **76** [8] 16–21 (1995).
Pimkhaokham, P., and R. Conradt, “Study on the Processes Controlling the Rate of Glass Batch Melting,” Rep. Res. Asahi Glass Foundation, 1993, 281–284 (1993).
Pincus, A. G., and G. M. Diken, *Electric Melting in the Glass Industry*. Books for Industry, New York, 1976.
Pioro, L. S., V. I. Babich, V. V. Pollyak, N. A. Pankova, and M. I. Koz’min, “Heat Exchange in Molten Glass during Bubbling and Contact Combustion,” *Glass Ceram*., **24** [1] 16–20 (1967).
Plumat, E., “Glass Progress in Belgium,” Glass Ind., 54, pp. 12, 22–28 (1973).
Plumat, E. M., “Development and Prospectives of Furnaces for Glass Melting,” *J. Non-Cryst. Solids*, **26** [1-3] 179–261 (1977).
Podushko, V.V.V.a.E.V., “The Melting of Glass in an Electric Field of High Frequency,” *Steklo Keram*., **15** [6] 16–19 (1958).
Popoff, A., “The Necessity for Pre-Heating Air in Furnace Work,” *Sprechsaal*, **54**, 496 (1921).
Porter, Michael, Competitive Strategy. The Free Press, 1980
Portner, D., “An Efficient Concept for Future Glass-melting Technology,” *Glass Prod. Technol. Int.*, 1990, 59–62 (1990).
Portugal, J. V., and L. D. Pye, “Plasma Melting of Selected Compositions in the Al_2O_3-ZrO_2-SiO_2 System,” p. 213 in *Materials Science Research*, Vol. 17 Emergent Process Methods for High Technology Ceramics. Ed., R. F. Davis, H. Palmour, and R. L. Porter. Plenum, New York, 1984.
Preston, F. W., “The Behavior and Misbehavior of Glass in Tanks,” *Bull. Am. Ceram. Soc*., **15** [12] 409–433 (1936).
Prihoda, M., and L. Kroupa, Klika, Rene, “Technical Feasibility and Design of Radiation Recuperators for Glass Furnaces,” *Sklar Keram*., **26** [2] 38–44 (1976).
Prudenza, M., “Determining the Performance Index of a Glassmelting Furnace,” *Riv. Stn. Sper. Vetro,* **9** [5] 370–375 (1979).
Puccioni, F., and A. Zucconi, “Improved Design of Continuous Glass Melting Furnaces,” *Glass Mach. Plants Accessories*, **13** [5] 73–78 (2000).
Pye, L. D., V. D. Fréchette, and N. J. Kreidl, eds. Borate Glasses: Structure, Properties, Applications. Plenum Press, New York, 1978.SRI International, “Glass—United States,” *Chemical Economics Handbook*, 1996.
Raghavan, R., R. R. Thomas, R. E. Miller, and W. L. Wallding, “Glass Batch Pelletizing and Pollution Capture Studies in Pellet Beds,” *Ceram. Eng. Sci. Proc.,* **2** [1-2] 57–78 (1981).
Raplee, J., “Expanding Economic Factors Drive Current Push to Oxy-Fuel,” *Glass Ind*., **76** [4] 17–19 (1995).
Rastogi, A. K., “High Frequency Induction Melting of Optical Glasses: Numerical Modeling,” Proc. Int. Congr. Glass, 18th, 729–734 (1998).
Rawson, H., “Comments on “Use of Microwave Radiation in the Processing of Glass” by M P Knox and G J Copley,” *Glass Technol.,* **38** [6] 219–220 (1997).
Ray, C. S., and D. E. Day, “Glass Formation in Microgravity,” Mater. Res. Soc. Symp. Proc., 87 239–251 (1987).
Reynolds, M. C., “Electric Furnace Design,” *Glass Technol.*, **23** [1] 38–43 (1982).
Reynolds, M. C., “Electric Melting Evolution or Revolution,” *Int. Glass J.,* **21** [111] 23–25 (2001).

Richards, R. S., “Method and Apparatus for Waste Vitrification,” International Application WO 91/16715 (18 April 1990).
Richards, R. S., “Rapid Glass Melting and Refining System,” *Am. Ceram. Soc. Bull*., **67** [11] 1806–1809 (1988).
Richards, R. S., “Rapid Glass Melting and Refining System. Advances in the Fusion and Processing of Glass”; pp. 50.1–50.11 in *Advances in the Fusion of Glass*., ed., D. F. Bickford. American Ceramic Society, Westerville, Ohio, 1988.
Richards, R. S., and V. Jain, “Rapid Stirred Melting of Simulated West Valley High Level Waste,” pp. 229-38 in *Ceramic Transactions,* Vol. 39 Environmental and Waste Management Issues in the Ceramic Industry, Ed., G. B. Mellinger. American Ceramic Society, Westerville, Ohio, 1994.
Richards, R. S., and F. J. Nelson, “A Batch Preheater for Energy Efficiency,” *Am. Ceram. Soc. Bull.*, **67** [11] 1802–1805 (1988).
Ridderbusch, G. L., “Advances in Glassmelting Furnace Technology,” *Ceram. Ind***.**, **136** [3] 48–52 (1991).
Roberts, D., “Vitrifix Process,” Conf. Rec. - IAS Annu. Meet., 22 1042–1050 (1987).
Rohr, M. V., “The Chronological Development of the Art of Melting Glass,” Naturwissenschaften, **12** 781–797 (1924).
Romanov, B. E., I. N. Gorina, G. I. Postnikov, and V. M. Budov, “Melting Properties of Glasses Produced by a Rolling Process,” *Glass Ceram*. (Engl. Transl.), **29** [5-6] 312–314 (1972).
Romanovskii, M., A. Afanas’ev, and S. Tyurenko, “High-Temperature Tank Furnace for Melting Hard Glass,” *Glass Ceram*. (Engl. Transl.), **32** [9-10] 656–657 (1975).
Ross, C.P., “Operational Evaluation of the Dual-Glass-Depth Melting Concept,” *Ceram. Eng. Sci. Proc*., **4** [3-4] 340–345 (1983).
Ross, C. P., “Energy Benchmarking for the Glass Industry,” *Am. Ceram. Soc. Bull*., **76** [10] 85–89 (1997).
Ross, C.P, “Dual-depth Melting of Glass,” *Glass Ind*., **65** [3] 14–16 (1984).
Routt, K. R., and K. R. Crow, “Theoretical Predictions for Glass Flow into an Evacuated Canister,” pp. 567–579 in Advances in Ceramics, Vol. 8 Nuclear Waste Management. Edited by G. G. Wicks and W. A. Ross. American Ceramic Society, Westerville, Ohio, 1984.
Ruiz, R., S. Wayman, B. Jurcik, L. Philippe, and J.-Y. Iatrides, “Oxy-Fuel Furnace Design Considerations,” *Ceram. Eng. Sci. Proc*., **16** [2] 179–189 (1995).
Ruslov, V. N., “Improving the Fuel Efficiency of Glassmaking Furnaces,” *Glass Ceram*. (Engl. Transl.), **50** [5-6] 239–241 (1993).
Sakhuja, R., and W. E. Cole, “Fluidized Beds for Glass Batch Preheating,” *Can. Clay Ceram. Q*., **54** [4] 5–7 (1981).
Saltin, L., “The destruction and re-use of mineral wool scrap,” International Application WO 91/03435 (6 September 1989).
Samokhvalov, V. S., A. A. Torlopov, M. P. Zub, S. M. Kravets, and V. E. Novoselov, “Operating a Steam Superheater on a Glass-melting Furnace,” *Glass Ceram*. (Engl. Transl.), **48** [9-10] 479 (1991).
Sasek, L., “Mechanism of Influencing the Melting Process of Sodium-calcium Glasses by Chlorides,” *Sb. Vys. Sk. Chem–Technol. Praze, Anorg. Technol.,* **B9**, 183–200 (1966).
Savina, I. M., V. P. Bespalov, Levitin L Ya, and O. N. Popov, “Effect of the Design of the Separating Unit on the Heat and Mass Transfer of the Glass Mass,” *Glass Ceram*. (Engl. Transl.), **46** [1-2] 16–19 (1989).
Scarfe, F., “Electric Melting--a Review,” *Glass Technol*., **21** [1] 37–50 (1980).
Schaeffer, H. A., “Scientific and Technological Challenges of Industrial Glass Melting,” *Solid State Ionics,* **105** [1-4] 265–270 (1998).
Schaeffer, H. A., “Status of the Glass Industry in Germany - Technological Challenges to Glass Melting and Processing,” pp. 95-105 in *Ceramic Transactions*, Vol. 82 Advances in Fusion and Processing of Glass II. Edited by A. G. Clare and L. E. Jones. American Ceramic Society, Westerville, OH, 1998.
Schmalhorst, E., “PLM's Success with Indirect Batch and Cullet Preheating,” *Glass* (London), **71** [1] 21–22 (1994).
Schnurpfeil, H., “Electric Glass Melting Furnaces,” *Zentr. Baukeram. Glasind*., **25** 4064–4065 (1910).
Scholz, U., “Batch Preheating with Simultaneous Nitric Oxide Reduction in a Container Glassworks,” *Ind. Ceram*., **969** 208–214 (2001).
Scholze, H., *Glass: Nature, Structure, and Properties*. Translated by M. J. Lakin. SpringerVerlag, New York, 1991.
Schroeder, R. W., J. D. Kwamya, P. Leone, and B. Larry, “Batch and Cullet Preheating and Emissions Control on Oxy-Fuel Furnaces,” *Ceram. Eng. Sci. Proc*., **21** [1] 207–219 (2000).
Schultze, R., “Bibliography of the Literature on Electrical Glass Melting,” *Glastech. Ber*., **12** [11] 389 (1934).

Schulz, R. L., Z. Fathi, D. E. Clark, and G. G. Wicks, "Microwave Processing of Simulated Nuclear Waste Glass," pp. 451-8 in *Ceramic Transactions*, Vol. 21 Microwaves: Theory & Applications in Materials Processing. Edited by D. E. Clark, F. D. Gac, and W. H. Sutton. American Ceramic Society, Westerville, Ohio, 1991.
Schwalbe, F. G., "Briquetting of Glass Batch," *Ceram. Ind*., **30** [6] 34, 37 (1938).
Schwalbe, F. G., "Improvement in Tank-Furnace Design," *Glass Ind*., **25** [12] 550–553, 562 (1944).
Schwalbe, F. G., "Twenty Years of Progress in Glass Melting," *Glass Ind*., **21** 169–170, 202 (1940).
Seddon, E., "The Assessment of the Thermal Performance of Tank Furnace for Melting Glass. A Report by the Furnace Committee," *J. Soc. Glass Technol.,* **28** 33–52 (1944).
Senior, D., "From Deep Refiner Technology to Mathematical Modelling," *Glass* (London), **78** [3] 86–87 (2001).
Senkevich, N. A., and O. D. Khait, "Glass Tank Furnaces with Two Production Basins for Melting Crystal Glass," *Glass Ceram*. (Engl. Transl.), **3**1 [10] 730–733 (1974).
Sethi, G., "Energy Efficiency in Glass Melting," *Glass Int.,* **25** [1] 44–45 (2002).
Sevast'yanov, R. I., "Use of Electric Power in Glass Melting," *Glass Ceram.* (Engl. Transl.), **51** [3] 105–108 (1994).
Seward, T. P., "Some Aspects of Oxy-Fuel Glass Melting," *Glass Technol.,* **38** [5] 150–151 (1997).
Shapiro, M. D., A. I. Tyurin, and Y. Lashenkov, "Using Heat from Glassmelting Furnace Waste Gases," *Glass Ceram*. (Engl. Transl.), **37** [11] 568–569 (1980).
Shershnev, Y. M., "New Equipment in the Glass-melting Industry," *Refract. Ind. Ceram*., **40** [9/10] 414 (1999).
Shin, J. S., "Pelletizing Glass Batches," *Yo-up Hoeji*, **9** [2] 44–46 (1972).
Shur, M. F., and L. M. Silberfarb, "The Problem of Glass Melting from Briquetted Batch," *J. Soc. Glass Technol*., **14** 247–248A (1930).
Shute, R. L., and A. E. Badger, "Portland Cement in Glass Batch Briquets," *Glass Ind.,* **21**, 28 (1940).
Sibiryakov, V., V. Yageman, and K. Pchelyakov, "Effect of Free Convection of Molten Glass on Heat Transfer in Tank Furnaces," *Glass Ceram*. (Engl. Transl.), **35** [9-10] 577–579 (1978).
Sibiryakov, V. A., "Fining and Cooling of Glassmelt during the Melting of Glass in a Glass Furnace," *Proizvod. Issled. Stekla Silik. Mater*., **5**, 32–38 (1976).
Simpson, W., "Calumite Blast-Furnace Slag is a Glass Batch Material," *Glastech. Ber*., **57** [3] 45–51 (1984).
Simpson, W., "Calumite Slag as a Glassmaking Raw Material for the Increase of Furnace Productivity," *Glass Technol.,* **17** [1] 35–40 (1976).
Sims, R., "The Five Principles of Glass Conditioning," *Glass* (London), **79** [1] 30–32 (2002).
Sims, R., "Small Revolution in Furnace Design," *Glass* (London), **68** [10] 423–425 (1991).
Sinevich, A. K., "Use of Synthetic Amorphous Silica for Melting of Silicate Glasses," *Glass Ceram.,* 1987 [2] 78–79 (1987).
Sismey, C. J., "Limitations Affecting the Performances of Glass Melting Furnaces," *Glass Technol*., **25** [2] 83–90 (1984).
Sismey, C. J., "Recuperators in the Glass Industry," *Glass* (London), **64** [4] 149–150 (1987).
Smith, D. P., "Secondary Regenerators Used in Glass Melting Furnaces," *Glass Prod. Technol*., 1990 69–71 (1990).
Smith, M. A., and R. R. Thomas, "Corning's Moly Delivery Systems Perform Well," *Glass Ind*., **72** [13] 22–28 (1991).
Smrcek, A., and J. Smrcek, "Regularities in Heat Consumption during the Melting of Glass in the Tank Furnace: III, Principles of Tank Furnace," *Sklar Keram.,* **35** [4] 97–101 (1985).
Smrcek, J., and J. Simunek, "Maximum Melting Rate in a Glass Tank," *Sprechsaal*, **113** [5] 330–336 (1980).
Snyder, W. J., R. P. Chamberland, F. N. Steigman, and C. J. Hoyle, "Economic Aspects of Preheating Batch and Cullet for Oxy-Fuel-Fired Furnaces," *Ceram. Eng. Sci. Proc*., **22** [1] 55–70 (2001).
Sparidaens, A.J.C.M., "Batch Pelletisation - The Key to Glass Quality Improvement," *Glass Technol*, **32** [5] 149–152 (1991).
Spinosa, E. D., and D. E. Ensminger, "Sonic Energy as a Means to Reduce Energy Consumption during Glassmelting," *Ceram. Eng. Sci. Proc.,* **7** [3-4] 410–425 (1986).
Spinosa, E. D., and D. E. Ensminger, "Sonic Energy Reduces Energy Consumption during Melting," *Glass Ind*., **68** [4] 10, 3–6 (1987).
Spirin, Y. L., "Trends in Improving Furnaces for Melting Low-Alkali Batches," *Glass Ceram.* (Engl. Transl.), **29** [9-10] 571–573 (1972).
SRI International, "Textile Glass Fibers — United States," Chemical Economics Handbook, 1995.
Srivastava, R. C., "Glass Currents in Tank Furnace," *Glass Udyog*, **14** [4] 31–32 (1985).

"Standard Terminology of Glass and Glass Products," ASTM Standard C162-99. 2000 Annual Book of Standards, Vol. 15.02. American Society for Testing and Materials, West Conshohocken, Penn., 2000. U.S. Department of Commerce, Bureau of the Census, Current Industrial Reports.
Stanek, J., "Glassmelting Intensification by Bubbling and Heat Boosting," *Sklar Keram*., **29** [8] 225–227 (1979).
Stanek, J., "New Aspects in Melting of Glass," *J. Non-Cryst. Solids*, **26** [1-3] 160–78 (1977).
Stanek, J., "Problems in Electric Melting of Glass," *J. Non-Cryst. Solids*, **123** [1-3] 400–414 (1990).
Stepanenko, M. G., L. K. Kovalev, and B. M. Polik, "A Combination Furnace for Glass Manufacture," *Keram. Steklo*, 1938 [3] 31–39 (1939).
Stewart, D. R., "Concepts of Glass-Ceramics"; pp. 237–271 in *Introduction to Glass Science*. Eds., L. D. Pye, H. J. Stevens, and W. C. LaCourse. Plenum Press, New York, 1972.
Stoch, Z., and W. Pater, "Influence of Selected Glass Batch Factors on the Melting Process," *Silikattechnik*, **31** [12] 364–366 (1980).
Streicher, E., O. Marin, O. Charon, and H. Borders, "Oscillating Combustion Technology Boosts Furnace Efficiency," *Ind. Heat.,* **68** [2] 35–39 (2001).
Suesser, V., "Effect of Charge Sintering on Glass Smelting," *Veda Vyzk. Prum. Sklarskem.,* **8** 33–46 (1963).
Sun, C., and J. Le, "Energy Saving Effect with Honeycomb Crown," *Glass Technol***., 41** [4] 140–142 (2000).
Sundaram, S. K., Hsu J-Y, and R. F. Speyer, "Molten Glass Corrosion Resistance of Immersed Combustion-Heating Tube Materials in E-Glass," *J. Am. Ceram. Soc*.**, 78** [7] 1940–1946 (1995).
Tackels, G., "What Impact Will IPPC Have on the Glass Maker?" *Glass* (London), **78** [3] 101–103 (2001).
Takasu, T., K. Sassa, and S. Asai, "A Glass Melting by Use of a High Frequency Induction Skull Melting Method with Submerged Heating Elements and Its Heat Conduction Analysis," *Tetsu-To-Hagane/Journal of the Iron and Steel Institute of Japan*, **80** [3] 13–18 (1994).
Takeshita, S., S. Nakajima, and C. Tanaka, "Refining of Boro-Silicate Glasses under Subatmospheric Pressures," *Rep. Res. Lab. Asahi Glass*, **43** [1] 1–9 (1993).
Tang, J., and A. R. Cooper, "Application of Pure Oxygen with Batch Preheating to Glass-melting Furnaces," *Am. Ceram. Soc. Bull*., **69** [11] 1827 (1990).
Tang, Y., and G. H. Frischat, "Influence of Small Additions of Li2O Raw Materials on Glass Melting," *Glastech. Ber. Glass Sci. Technol*., **68** [7] 213–221 (1995).
Tatevosyan, K., T. Vardanyan, Y. Petrosyan, and B. Petrosyan, "Tests of an Experimental Electric Glass-melting Furnace," *Glass Ceram*. (Engl. Transl.), **43** [9-10] 387–390 (1986).
Tatevosyan, K. M., "Determination of the Optimal Depth of the Tank of Electric Glass-melting Furnaces," *Glass Ceram.* (Engl. Transl**.), 40** [7-8] 401–406 (1983).
Tatevosyan, K. M., "Results of Testing a New Electric Glass-melting Furnace," *Glass Ceram.* (Engl. Transl.), **51** [7/8] 241–244 (1994).
Tatevosyan, K. M., K. A. Kostanyan, and R. B. Korukhchyan, "Tests on a New Glass Furnace," *Glass Ceram.* (Engl. Transl.), **39** [12] 589–591 (1982).
Taylor, J. A., "A Small Electric Arc Furnace for Melting and Pouring Glasses and Corrosive Slags," Bull. Am. Ceram. Soc**., 18** [8] 297 (1939).
Teisen, K., "Changing Criteria of Furnace Designs for the Container Industry and the Role of the Side Fired Recuperative Glass Melting Tank," *Glass Technol*., **32** [3] 75–81 (1991).
Teisen, T., "Development of Glass Furnaces on the Continent—Description of the Hermansen Furnace," *J. Soc. Glass Technol.,* **I**, 74–87 (1917).
Thiele, H., and S. Jacob, "Chemical Reactions in [Prereacted Batch] Transformation Changes and Their Influence on Melting Behavior," *Silikattechnik*, **31** [8] 241–244 (1980).
Thurmer, A., and G. Glaser, "Glass Melting and Glass Properties in Relation to Physical Conditions of Batch Materials," *Glass*, **15** [8] 316–319 (1938).
Tiwary, R., D. Stickler, and J. Woodroffe, "Numerical Modeling of Reacting Liquid Glass Layer in an Advanced Glass Melter," *J. Am. Ceram. Soc*., **71** [9] 761–766 (1988).
Tiwary, R., D. Stickler, and J. Woodroffe, "Rapid Heating of a Glass Batch in an Advanced Glass Melter," *J. Am. Ceram. Soc.,* **71** [9] 748–753 (1988).
Tiwary, R., D. B. Stickler, and J. Woodroffe, "Numerical Modeling to Support Engineering Development of an Advanced Glass Melter*," Am. Ceram. Soc. Bull.,* **67** [11] 1791–1796 (1988).
Tiwary, R. S., D.; Woodroffe, J., "Numerical Modeling of Glass Formation Process in an Advanced Glass Melter," *J. Am. Ceram. Soc***., 71** [9] 754–760 (1988).

Tooley, F. V., *Handbook of Glass Manufacture*, 3rd ed. Ashlee, Books for Glass Industry, New York, 1984.
Trevelyan, R. E., "Glass melting," European Patent 0,403,184 (13 June 1989).
Trier, W., *Glass Furnaces: Design, Construction and Operation*. Society of Glass Technology, Sheffield, England, 1987.
Trier, W., and T. Werner, "Development and Evaluation of Heat Balances for Glass Tank Furnaces," *Glastech. Ber.*, **37** [2] 79–92 (1964).
Triquet, "Present Day Glass Furnaces," *Tech. Mod.*, **15** 508 (1923).
Troyankin, Y. V., L. K. Timofeeva, and V. M. Smirnov, "Cyclone Melting in Production of Heat-Resistant Stone Castings," *Glass Ceram*. (Engl. Transl.), **35** [6] 321–323 (1978).
Turner, W., "Thermal Efficiencies of Float and Container Furnaces," *Ceram. Eng. Sci. Proc.*, **17** [2] 93–102 (1996).
Turner, W.E.S., "Development of Glass Melting Furnaces in Recent Times," *J. Soc. Glass Technol.*, **11** 303–320 (1927).
Turner, W. H., "Maximum Glass Melter Performance," *Ceram. Eng. Sci. Proc.*, **8** [3-4] 142–155 (1987).
Turton, G., and R. D. Argent, "Are Cross-Fired, Multipass Regenerative Furnaces Cost Effective?" *Glass Ind*, **70** [4] 16–17, 32 (1989).
Tykachinskii, I. D., M. B. Romanovskii, and S. Y. Raf, "Acceleration of the Production of Low-alkali Glass with the Use of a Finely Pulverizided Charge," *Steklo. Byull. Gosudarst. Nauch.-Issledovatel . Inst. Stekla*, 1959 [1] 30–32 (1959).
Ungan, A., I. G. Choi, and R. U. Payli, "Numerical Study of Melting Conditions in a Deep Glass Melter," p. 29 in *Ceramic Transactions*, Vol. 29 Advances in Fusion and Processing of Glass. Ed., A. K. Varshneya, D. F. Bickford, and P. Bihuniak. American Ceramic Society, Westerville, Ohio, 1993.
Ungan, A., and R. Viskanta, "Effect of Air Bubbling on Circulation and Heat Transfer in a Glass-melting Tank," *J. Am. Ceram. Soc.,* **69** [5] 382–391 (1986).
Ungan, A., and R. Viskanta, "Melting of Glass Batch Blankets in Furnaces," AIChE Symp. Ser., 80 [236] 446–451 (1984).
U.S. Department of Commerce, Bureau of the Census, *Statistical Abstract of the United States 1991*, 111th ed. Washington, D.C., 1992.
U.S. Department of Energy, "Energy and Environmental Profile of the U.S. Glass Industry," April 2002.
U.S. Department of Energy, "Insulation Fact Sheet," 1997.
U.S. Department of Energy, Office of Industrial Technologies, "Glass Industry Profiles," December 1990.
U.S. Department of Energy, Office of Industrial Technologies, Advanced Industrial Materials Program, "Materials Needs & Opportunities in the Glass Industry," December 1994.
U.S. Department of Labor, Bureau of Labor Statistics.
Utterback, James M., *Mastering the Dynamics of Innovation*. Harvard Business School Press, 1994.
The Value Line Investment Survey.
van der Molen, R. H., and C. J. Uhrmann, "Staged Combustion Coal-Fired Glass Furnace," Glass Ind., 58 [1] 14–24 (1977).
van der Veen, H., "Batch Pelletization—The Key to Glass Quality Improvement," *Glastek. Tidskr.*, **47** [3] 87–91 (1992).
Verweij, H., "The Fining of Glass: A Raman-spectrometric Investigation into the Action of Arsenic Oxides," *Philips Tech. Rev.*, **40** [10] 310–315 (1982).
Verzner, V. N., and M. A. Yur'ev, "The Removal of Bubbles with the Help of Gas-free Glass," *Optiko-mekh. Prom-st.*, **6** [8] 3–5 (1936).
Viewegh, J., and L. Novak, "Electric Melting of Glass--25 Years," *Sklar Keram.*, **37** [3] 70–72 (1987).
Vilk, P., "Recent Developments in Glass Conditioning," Proc. Slovak Glass Conf., 1st, 1, 66–78 (2000).
Viskanta, R., and X. Wu, "Effect of Gas Percolation on Melting of Glass Batch," *J. Am. Ceram. Soc.*, **67** [5] 376–380 (1984).
Viskanta, R., and X. Wu, "Effect of Radiation on the Melting of Glass Batch," *Glastech. Ber.*, **56** [6-7] 138–147 (1983).
Vogel, W., *Chemistry of Glass*. American Ceramic Society, Westerville, Ohio, 1985.
Vogt, H. G., "Glass"; pp. 175–206 in *Encyclopedia of Chemical Technology*. Edited by R. E. Kirk and D. F. Othmer. Interscience Encyclopedia, New York, 1947.
Voorhies, J. A., "Glass Tank Design," *Fuels Furn.*, **3** 167–168, 71 (1925).
Voss, H.-J., "Electrically Heated Glass Melting Furnaces–Today's Position with Regard to Energy, Environment, Flexibility and Operational Safety. Pt.1," *Glastech. Ber. Glass Sci. Technol.,* **70** [5] N61–N68 (1997).

Wagnerova, S., S. Kasa, P. Jandacek, and F. Paur, "Influence of Intensifying Means upon Technological Characteristics of Glass Melting Furnaces," *Ceram.–Silik.*, **44** [1] 20–25 (2000).
Wang, J., and M. G. Carvalho, "Model-Based Study of Sand Grain Dissolution in Industrial Glass Furnaces," *Proc. Int. Congr. Glass*, 18th, 735–740 (1998).
Wang, M. C., J. H. Liaw, and N. C. Wu, "Blast Furnace Slag as a Raw Material for Glass Melting," *Glass Technol.*, **30** [1] 29 (1989).
Warburg Dillion Reed, "U.S. Construction and Building Products Analyzer," Security Analysts' Report, January 2000.
Warren, G. A., "On Electric Melting," *Glastek. Tidskr.*, **38** [1] 9–16 (1983).
Weinberg, M. C., "Fining of Glasses: Present Problems and Speculations of Things to Come," *J. Non-Cryst. Solids*, **87** [3] 376–386 (1986).
Weiser, S. M., "Fine-Grind Cullet Technology. Pt. 2. Results of Plant Production Trials Using Fine-Grind Cullet," *Ceram. Eng. Sci. Proc.*, **16** [2] 101–104 (1995).
Weissart, H. W., "Preheating of Raw Material for Glass Furnaces," *Glass Technol*, **30** [6] 201–202 (1989).
Weyl, W. A., *Colored Glasses*. Society of Glass Technology, Sheffield, England, 1951.
Weyl, W., A., "Increasing the Rate of Homogenizing Glasses," *J. Can. Ceram. Soc.,* 1973 [42] 37–43 (1973).
Wiedmann, U., "Glasschmelzofen," European Patent 0,306,657 (8 September 1987).
Wilcox, D. L., "New Concept for Heat Recovery," *Am. Ceram. Soc.Bull*, **38**, 24 (1959).
Windle, G. V., "Full-scale Evaluation of a Producer Gas-fired Glass Furnace," *Glass Technol.*, **25** [2] 66–71 (1984).
Wishnick, D., "The Future of Glass Melting," *Glass Int.*, **24** [3] 23–24 (2001).
Wood, R. P., "Improvement in Glass Melting Efficiency," *Glass Technol., 22* [2] 79–90 (1981).
Woolley, F. E., "Melting/Fining"; pp. 386–393 in *Ceramics and Glasses, Engineered Materials Handbook,* Vol. 4. ed., S. J. Schneider. ASM International, Materials Park, Ohio, 1991.
Wright, G., "Opportunities for Cost Reduction and Improved Efficiency," *Glass* (London), **61** [1] 13–14, 16 (1984).
Wu, X., and R. Viskanta, "Modeling of Heat Transfer in the Melting of a [Preheated and Unheated] Glass Batch," *J. Non-Cryst. Solids*, **80** [1-3] 613–622 (1986).
Wu, Y., and A. R. Cooper, "Batch and Cullet Preheating for Energy Savings and Removal of Air Pollutants," *Ceram. Eng. Sci. Proc.* **13** [3-4] 91–103 (1992).
Wu, Y., and A. R. Cooper, "Batch and Cullet Preheating Can Save Energy," *Glass Ind*, **73** [8] 10–13 (1992).
Wu, Y., and A. R. Cooper, "Thermodynamics and Kinetics of Batch and Cullet Preheat for Energy Savings and Removal of Air Pollutants," *Trans. Indian Ceram. Soc.*, **50** [6] 145–150 (1991).
Yamamoto, J., "Pelletizing Technology of Glass Batch," Int. Congr. Glass, 10th, 3, 1–4 (1974).
Yi, J.J.L., and P. R. Strutt, "Glass Formation by Laser Melting," pp. 491–499 in *Advances in the Fusion of Glass*, ed., D. F. Bickford. American Ceramic Society, Westervillle, Ohio, 1988.
Yoshikawa, H., and Y. Kawase, "Significance or Redox Reactions in Glass Refining Processes," *Glastech. Ber. Glass Sci. Technol.,* **70** [2] 31–40 (1997).
Young, D. A., "Furnace Gains Efficiency by Recapturing Waste Heat," *R&D (Cahners),* **26** [3] 86 (1984).
Zaliznyak, D. V., M. Y. Firer, V. V. Konovalov, V. I. Chechetkin, and V. G. Dunaev, "The Effect of Thermal Preparation of the Raw Mix in Glass Fusion," *Glass Ceram*. (Engl. Transl.), **16** [10] 550–556 (1959).
Zhilin, A. A., A. N. Zamyatin, and V. K. Shiff, "Mathematical Modelling of Glass Melt Heat Exchange in a Cylindrical Induction Furnace," *Glass Ceram*. (Engl. Transl.), **51** [3] 122–127 (1994).
Zhiqiang, Y., and Z. Zhihao, "Basic Flow Pattern and Its Variation in Different Types of Glass Tank Furnaces," *Glastech. Ber. Glass Sci. Technol.,* **70** [6] 165–172 (1997).
Zippe, B.-H., "Economics of Cullet Preheating," *Glass Int.,* 1992 [June] 8–9 (1992).
Zippe, B.-H., "Reliable Batch and Cullet Preheater for Glass Furnaces," *Glass Technol,* **35** [2] 58–60 (1994).
Zippe, B.-H., "Reliable Cullet Preheater for Glass Furnaces," *Ceram. Eng. Sci. Proc.*, **12** [3-4] 550–555 (1991).
Zippe, B. H., "Pelletisation of Glass Batch," *Glass Int.*, 1982 [December] 25 (1982).
Zippe, B. H., "Pelletizing Raw Materials for Improved Glass Manufacture," *Glass* (London), **53** [11] 346–347, 50–51, 65 (1976).

*This glass literature bibliography was compiled by by Pat LaCourse, engineering and science librarian at Scholes Library, a special academic library with extensive resources in ceramic and glass engineering and materials science located at the New York State College of Ceramics at Alfred University, Alfred, NY, electronic databases and print abstracts searched included Ceramic Abstracts, Chemical Abstracts, E.I. Compendex, FirstSearch, ScienceDirect, and Ingenta. Expertise in the areas of foreign patent information and Russian glass science literature was

contributed by Nancy Lemon, Knowledge Resource Services, Owens Corning (Granville, Ohio), and Dr. Oleg Prokhorenko, Thermex Corp., Laboratory of Glass Properties (St. Petersburg, Russia).

Tables

Table II.1. Key End-Use Markets by Segment 31
Table II.2. Estimated Cost of Manufacture by Cost Component (%) 31
Table II.3. Energy by Process Stage 32
Table II.4. Industry Segment Concentration 34
Table II.5. Trend in value of glass products shipped 1997–2001 ($ million) 34
Table II.6. Trend in Container Glass Shipments 35
Table II.7. US Flat Glass Production 1980 to 2000 36
Table II.8. Glass Fiber Insulation Demand by Market 1990-2010 38
Table II.9. US Value of Glass Shipments 39
Table II.10. Melter Rebuild Cost by Glass Industry Segment 40
Table II.11. Direct Container Glass Costs 41
Table II.12. Reduction in Energy Cost (%) Required to Earn 10% to 20% Return on a $1Million Capital Investment per Glass Furnace 45
Table III.1. Advantages and Disadvantages of Electric Melting 57
Table IV.I. RAMAR compared to conventional melting systems 83
Table VI. Objectives and Goals for 2020 101
Table 2.1 Key Performance indicators (KPI) 138
Table A.1. Categorization of Liberature 189
Table A.2. Categorization of Patents 215

Figures

Figure I.1. Quality, Energy, Throughput Choices. 13
Figure I.2. Energy consumption of 123 glass furnaces globally, ranked low to high. 14
Figure I.3. Sankey diagram of energy flows in the most energy-efficient container glass furnace—end port regenerative without electric boosting—normalized to 50% cullet, without batch preheating. 16
Figure II.1. Trend in Flat Glass Sales for 25 years. 46
Figure III.1. End Port Melter 52
Figure III.2. Side Port Melter 53
Figure III.3. Unit Melter 54
Figure IV.1. PPG P-10 Primary Melter, Secondary Melter, and Vacuum Refining 62
Figure IV.2. GRI's Advanced Glass Melter 69
Figure IV.3. BOC E-Batch Design 75
Figure IV.4. Rapid Melting and Refining (RAMAR) Owens-Illinois (pellet et al. 1973; Barton, 1993). 82
Figure 1.1. General Flow of Glass Manufacture 113
Figure 3.A.1.. Submerged Combustion Melter Schematic. 153
Figure 3.B.1. High-Intensity Plasma Glass Melter Schematic 162
Figure 3.D.1. Schematic arrangement of sections of a segmented melter, with typical temperature levels, residence times, and heating options. 178

INDEX

Accelerated melting, 66–69, 91–94
Advanced control of glass melting, 146–147;
Model Predictive Control, 140;
Furnace, 146;
Forehearth, 147;
Fuzzy Logic Control, 147;
Neural Networks, 147
Automation
European experience, 138–139;
Furnace combustion process, 139;
Parameter measurements, 139;
Temperatures sensors, 139;
Thermal momentum, 140
Automation and control systems, 91
Automation and instrumentation, 140–147;
for glass manufacturing, 137–147;
Product measurement, 140;
Thermal heat transfer, 140;
Furnace, 141;
Hot spot, 140;
Bubbler systems, 141;
Glass level, 141;
Furnace pressure, 142;
Oxygen measurement, 142;
Batch moisture, 142;
Data control, 142;
Manual readings, 143;
Stack and flue conditions, 143;
Process control technology, 143
Automation systems, 143–145

Bibliography, 251–267
Borosilicate glasses, 112
Business model, 103

Capital investment, 29
Return on, 42–43
Financial attractiveness, 46
Capital productivity, operating costs, 16–18

Challenges, 5, 10
Chemical homogenization, 124–125
Cold top electric melting, 116–117
Collaboration, by industry, 47
Counterflow-crossflow Plate Cullet Heat Exchanger, 79–80
Cyclonic melters, 84–85

Department of Energy, vii, 2

E-batch, 74-77
Economic assessment,
Introduction to, 3-4
of glass manufacturing, 27–48
Possibilities for, 95–96
Economic perspective
for future, 103
Economic solutions, 102
Economic strategy, 96

Electric furnaces, 56-58
Refining zone, 73
Electric melting,
Advantages and disadvantages, 57;
Cold top, 116–117;
Technology, innovative, 72–73;
Technology innovation, 72-73
Electrified cullet bed, 80
Emissions reduction,
Innovative technology for, 85–86
Körting Gradual Air Lamination, 85
Sorg LoNox furnace, 85-86
Energy,
Consumption by glass furnaces globally, 14;
Issues, 3–4;
Savings for melting, 13–16

Energy conservation,
Economics of, 43–45;
European efforts, 15–16;

Energy considerations for glassmaking, 132–134
Environmental issues of, 4;
Consideration, 134–135
Environmental regulations,
Economics of, 45

Figures, list of, 269
Fluidized Bed Batch Preheater, 78
Forced convection melting system, 92
Fuels, for melting, 90
Furnace life, 17
Furnaces, 129–132;
Regenerative, 51–52;
Electric, 51, 56
Recuperative, 53
Pot/day tank furnace, 53-54
Unit melter, 54
Oxy-fuel, 54–56, 57
Fusion et Affinage Rapide (FAR), 84
Fusion et Affinage Rapide Electrique (FARE), 84
Fusion process, description, 118–135

GIGTI Submerged Melter, 67–69
Gas evolution, 121
Glass fusion/refining, technical description, 115–136
Glass Inc., 103-104
Glass Industry Roadmap, 101
Glass manufacturing,
Factors in US economy, 27
Economic profile of, 27
Future profits, 28
Glass Manufacturing Industry Council, vii, viii, 89, 103, 105
GMIC Next Generation Melting System Task Force, 246
GMIC members, 246
Glass melting,
economics of, 39–42
technical assessment, 9–26
traditional, 49–58
Glass oxide compositions, 111–115
Glassmaking, characteristics of, 29–32
Glassmaking, controls for, 137–138
future of, 101–105
Glossary, 239–243

High Intensity Plasma Glass Melter, 92, 161–172
Homogenizing/conditioning, 127–128
Industry expert workshop participants, 98–100
Industry perspective
on melting technology, 89–100;
concerns, 1;
on current technology, 12
Industry
segments of, 2;
similarities/differencies,18–19;
environmental concerns of, 19–20
Innovations, review of, 93–94
Innovations in Glass Technology, 59–88
Innovations
Accelerated melting, 66;
Advanced Glass Melter (AGM), 67-69;
Arc plasma melting, 65;
Counterflow-crossflow Plate Cullet Heat Exchanger, 79–80;
Cyclonic melter, 84–85;
E-batch, 74–77;
Electrified Cullet Bed, 80;
Fluidized Bed Batch Preheater, 78;
for emissions reductions, 85-86;
Glass Plasma Melter, 64–65;
GIGTI Submerged Melter, 67–69;
High Intensity Plasma Glass Melting, 65–66;
Innovative electric melting technology, 72–73;
Nienburger Glas Batch Preheater, 77–78;
Non-conventional melting systems, 80–85;
Nuclear Waste Vitrification,

71–72;
PPG P-10 Process, 61–64;
Preheating batch and cullet, 73–74;
Raining Bed Batch/Cullet Preheater, 78–79;
Segmented Melting, 60–61;
Submerged Combustion Melting (SCM), 66–67
Labor, costs of glass melting, 42
Lead crystal and crystal glasses, 111–112
Literature, categorization of, 189
Literature chart, 190–213
Literature and patent review–glass technology, criteria for, 180–187
Liquid phase, 119–121

Marketing
Statistics and trends, 33–39;
Trends by segment, 34–39
Melting
Capital costs of, 40;
Production costs of, 41;
Feasibility of electric furnaces, 41;
Labor costs of, 42;
Technical areas to consider, 90–94
Melting Technology
Advances, 5–6, 9;
Advancing, 90–94;
Areas for exploration, 102;
Economics of, 39–42;
Electric, advantages and disadvantages, 57;
Historic processes, 10–11;
Industry Perspective, 89–100;
Innovations in economic stimuli for, 32–33
Issues defined, 29;
Motivation to advance, 21–23;
Process of, 50–51;
Revolutionary changes, 11;
Status of, 9–10;
Stimuli for development, 20;
Successes, 11;
Technical assessment, 9–26;
Traditional practice, 49–58;
Quality costs, 12
Mixed fuel furnaces, 57–58

Next Generation Melting System, 105
Nienburger Glas Batch Preheater, 77–78
Non-conventional melting systems, 80-85
Nuclear Waste Vitrification, 71–72

Oxy-fuel conversion, 92-93
Oxy-fuel furnace, 54-56
Oxy-fuel, fired front-end, 173–174

PPG P-10 process, 61-64;
Emissions controls of, 63;
Installation of, 63–64
Patents, categorization of, 215
Patents, chart, 216-238
Primer for glassmaking, 111-136
Pot/day tank furnace, 53–54
Preheating batch, 92
Preheating batch and cullet, 73–74
Process design, for melting, 91
Processing
standardized aspects of, 90–91

Raining Bed Batch, cullet preheater, 78–79
Rapid Melting and refining (RAMAR), 81–83;
system steps of, 81–83
Raw materials and batch formulation, 112–115
Recuperative Furnace, 53
Redox state, 125
Refining, 125–127
Refractory component solution, 122–124
Refractories, 17–18
Regenerative furnace, 5152

Segments, of glass industry, 2; 111–115

Segmentation
of glass industry, 30–31;
fragmentation of industry, 46;
interests of, 59
Segmented melting, 93
Soda-lime glasses, 111
Solid-state reaction, 118-119
Specialty glasses, 112
Strategy for economics, 96
Submerged combustion
melting, 150–159;
efforts to advance, 104
Suspended electrodes, 72
Systems innovations, 60

Tables, list of, 269
Technical improvements,
common theme, 10
Technical risks, aversion to, 18
Technology,
Areas for potential
exploration, 102;
Industry perspective, 102;
Innovations in, 59–88;
in systems, 60
Technology assessment,
introduction to, 2-3

Unit melter, 54

Value-added methods, 91–92
Vision for glassmaking, 101–105
Volatilization, 128–129
Vortec Cyclone Melting System, 84–85

GMIC
Glass Manufacturing Industry Council

ISBN: 0-9761283-0-6
Printed in the United States