Glass Industry of the Future

Quarterly Status Reports

As of March 31, 2004

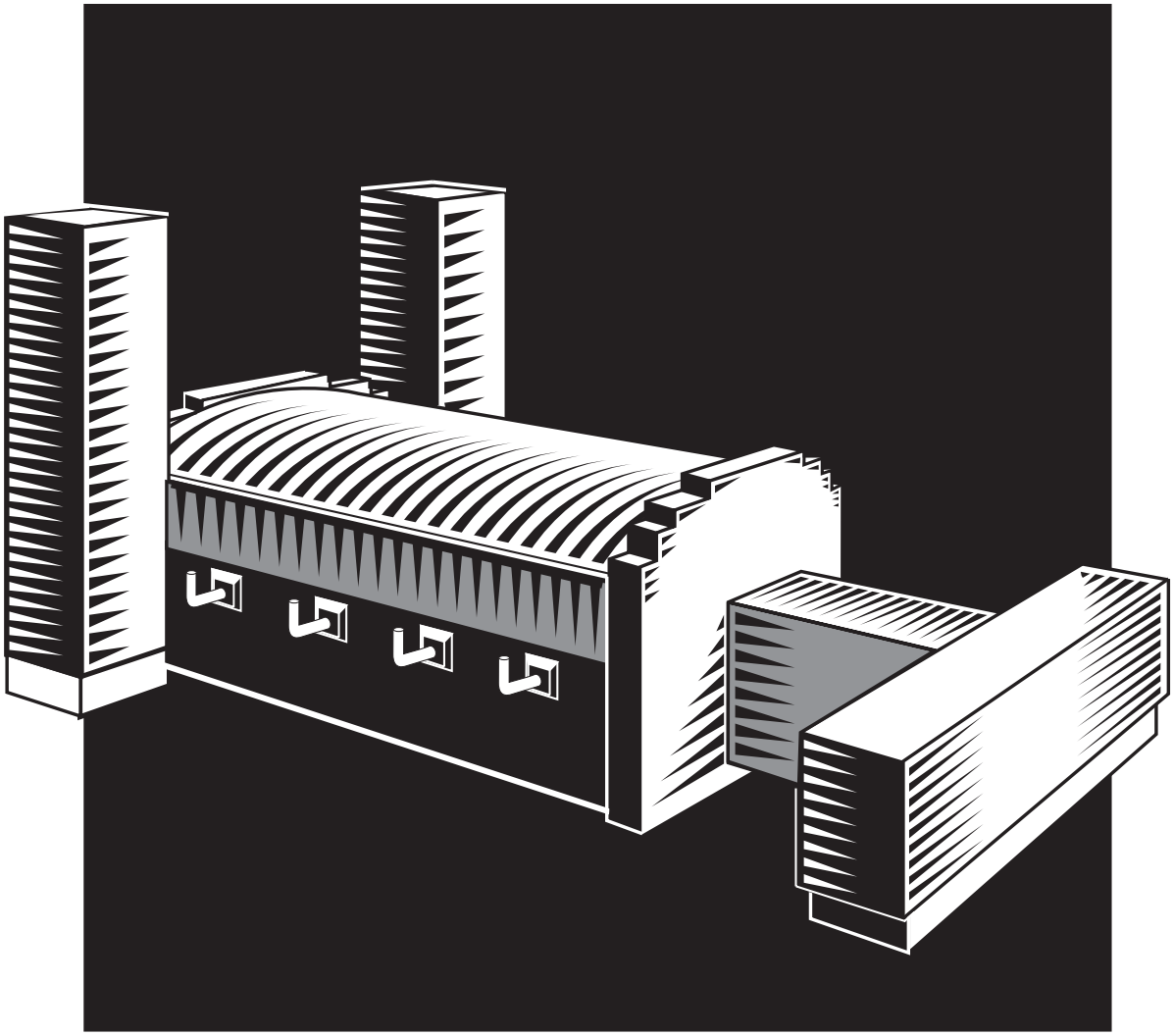

U.S. DEPARTMENT OF ENERGY

02-GA50113-03

Glass

Industry of the Future

Quarterly Status Reports

As of March 31, 2004

Contacts

HQ Program Managers

Sara Dillich	202-586-7925	sara.dillich@ee.doe.gov
Elliott Levine	202-586-1476	elliott.levine@ee.doe.gov

Field Office Project Managers

Brad Ring	303-275-4930	brad.ring@go.doe.gov
Joseph Springer	303-275-4758	joseph.springer@go.doe.gov

Other

Carrie Capps	303-275-4933	carrie.capps@go.doe.govf
Elmer H. Fleischman	208-526-9023	FleiscEH@inel.gov

Glass Projects

Developing the Glass Industry Vision and Roadmap 1
Greenman: Glass Manufacturing Industry Council
ID14315, CPS#01034

Measurement and Control of Glass Feedstocks 2
Weisberg: Energy Research Company
ID14030, CPS#01609

Improvement of Performance and Yield of Glass Fiber Drawing Technology 3
Sanger: State of Ohio
ID14347, CPS#none

Advanced Oxy-Fuel Front-End System 4
Mighton: Owens Corning
GO13091, CPS#14233

Energy Efficient Glass Melting: The Next Generation Melter 5
Rue: Gas Technology Institute
GO13092, CPS#14231

High Intensity Plasma Glass Melter 6
Gonterman: Plasmelt
GO13093, CPS#14232

Development and Validation of a Coupled Combustion Space/Glass Bath Furnace Simulation 7
Petrick: Argonne National Laboratory (Techneglas)
CPS#01025

Monitoring and Control of Alkali Volatilization and Batch Carryover for Minimization of Particulates and Crown Corrosion 8
Blevins: Sandia National Laboratories (Gallo Glass Co.)
CPS#01608

Development of Process Optimization Strategies, Models, and Chemical Databases for On-Line Coating of Flat Glass 9
Allendorf: Sandia National Laboratories
CPS#01640

Developing the Glass Industry Vision and Roadmap

Greenman: Glass Manufacturing Industry Council

ID14315, CPS#01034

DOE F 4600.6
(10-94)
Replaces EIA-459F
All Other Editions
Are Obsolete

U.S. Department of Energy

OMB Control No.
1910-0400

FEDERAL ASSISTANCE PROGRAM/PROJECT STATUS REPORT

OMB Burden Disclosure Statement

Public reporting burden for this collection of information is estimated to average 47.5 hours per response, including the time for reviewing instructions, searching existing data sources, gathering and maintaining the data needed, and completing and reviewing the collection of information. Send comments regarding this burden estimate or any other aspect of this collection of information, including suggestions for reducing this burden, to Office of Information Resources Management Policy, Plans, and Oversights, Records Management Division, HR-422 - GTN, Paperwork Reduction Project (1910-0400), U.S. Department of Energy, 1000 Independence Avenue, S.W., Washington, DC 20585; and to the Office of Management and Budget (OMB), Paperwork Reduction Project (1910-0400), Washington, DC 20503.

1. Program/Project Identification No.	2. Program/Project Title	3. Reporting Period
DE-FC36-02ID14315	Promotion of the U.S. Glass Industry	01/1/04 to 03/31/04

4. Name and Address	5. Program/Project Start Date
Michael Greenman Glass Manufacturing Industry Council PO Box 6136 Westerville, OH 43081	4/01/02
	6. Completion Date 3/31/05

7. Approach Changes

No changes since last reporting period.

8. Performance Variances, Accomplishments, or Problems

Current projects continue to evolve: refining workshop is set for 20 May in Pittsburgh; a meeting of 10 industry representatives at DuPont opened up possibilities for developing composite glass-polymer products in all sectors of our industry. Technical Director John Brown has made several visits to coal gasification plants to explore applicability of this technology to our industry. We will be scheduling a presentation by a speaker from NETL to introduce our board to the concept.

Carried out general administrative responsibilities and accounting activities in conjunction with various aspects of our contract with the Department of Energy.

Disseminated information to the glass industry regarding relevant solicitations issued by the Department of Energy and provided additional guidance to facilitate companies' ability to respond positively to same.

GMIC staff and members participated as guest panelists in the recent ITP Peer Review Program, discussing various aspects of our partnership with the DOE and emphasizing the substantial positive results that have derived from this relationship.

The Ohio partnership between Ohio Universities, the State government and the glass industry has led to the creation of a "Glass Industry Caucus" within the state government to address the concerns of the industry and the loss of jobs in many of the state's counties represented by caucus members.

The "recycling division" has been placed on hold as potential members were not prepared to give it the support it needs. We will address the question of the priority of recycling with our glass company members and seek a path forward that will allow us to accomplish our Roadmap objectives and seek new markets and products to develop in conjunction with recycling activities.

The GMIC is sponsoring a third Best-Practices workshop (Process Heating) to be held in California at the end of June 2004. We also expect to be participants in a planned "Industrial Showcase" in 2005. Communications are open with several organizations involved in the planning of the event.

The GMIC is assisting the Principal Investigators in several of the active projects to identify additional partners so as to ensure a broad representation by the glass industry in these collaborative activities.

The final report with recommendations developed from the 2003 Project Review was submitted to DOE with the request that comments and recommendations be transmitted to Principal Investigators for each of the projects involved.

9. Open Items

The Technical and Economic Assessment project is going through a final review and edit. We will distribute to our members a photocopied version in May, and turn the photo-ready final version over to DOE shortly thereafter..

10. Status Assessment and Forecast

Membership is beginning to grow again, with two new glass companies expressing their intent to join the Council during the second quarter. The enthusiasm within the Council for the progress expected from the three new research projects is very high. They are seen as potentially highly significant innovations for the industry.

11. Description of Attachments

12. Signature of Recipient and Date	13. Signature of U.S. Department of Energy (DOE) Reviewing Representative and Date
Michael Greenman – 4/29/04 (by e-mail)	

Measurement and Control of Glass Feedstocks

Weisberg: Energy Research Company

ID14030, CPS#01609

QUARTERLY PROGRESS REPORT

Project Title: Measurement and Control of Glass Feedstocks

Covering Period: January 1, 2004 through March 31, 2004

Date of Report: April 19, 2004

Recipient: Energy Research Company

Award Number: DE-FC36-01ID14030

Subcontractors: Oak Ridge National Laboratory

Other Partners: PPG Industries
Fenton Art Glass

Contact(s): Arel Weisberg, Ph.D.
(718) 608-0935
aweisberg@er-co.com

Project Team: DOE-HQ Contact: Elliot Levine
Contract Specialists: Brad Ring, Beth Dwyer

Project Objective: Energy Research Company (ERCo) is developing an on-line sensor for controlling the quality of glass feedstocks, both batch and cullet. In the case of batch, the sensor can determine whether or not the batch was formulated accurately, and serve as part of a feedback loop in the plant to control glass quality. In the case of cullet feedstocks, the sensor can serve as part of a system to sort cullet by color and ensure that it is free of contaminants.

Background: The Glass Industry Technology Roadmap[1] emphasizes the need for accurate process and feedstock sensors. Listed first under technological barriers to increased production efficiency is the "Inability to accurately measure and control the production process." ERCo's LIBS sensor addresses this need by giving plant operators critical knowledge of their batch composition. In plants where cullet is used in glass production, the LIBS sensor can provide color sorted cullet free of contaminants, including those contaminants that are not detectable using current optical based color sorters.

LIBS utilizes a highly concentrated laser pulse to rapidly vaporize and ionize a small amount of the material being studied. As the resulting plasma cools it radiates light at specific wavelengths corresponding to the elemental constituents (e.g. silicon, aluminum, iron) of the material. The strengths of the emissions correlate to the concentrations of each of the elemental constituents. This technology has been successfully

[1] Available at: http://www.oit.doe.gov/glass/pdfs/glass2002roadmap.pdf

demonstrated in ERCo's LIBS laboratory for both batch analysis and cullet sorting. In the upcoming year, designs of prototype sensors for installation at the program's industrial partners will be developed.

Status:

1. Executive Summary

Following last quarter's ulexite tests, representatives from ERCo visited PPG's Chester, S.C. fiber glass plant to complete the plans for the LIBS sensor demonstration. As a result of this meeting, the final sensor design was changed so that analysis of more than one element will be possible. The first tests will center on ulexite, the raw material of highest priority to PPG.

The sensor design and construction began this quarter and will be installed and tested in the Chester plant during the current quarter.

2. Visit to PPG Chester, S.C. Fiber Glass Plant

Robert De Saro, Arel Weisberg, and Joseph Craparo of ERCo traveled to PPG's fiber glass plant in Chester, S.C. to meet with Kevin Streicher and Chi Tang of PPG. Mr. Streicher is the plant's Production Engineer, and Mr. Tang is a Research Associate leading the program for PPG, in place of Cheryl Richards following her promotion.

The purpose of the meeting was to brief PPG in detail on the progress achieved in the laboratory experiments over the course of the last several months. Mr. Streicher and Mr. Tang agreed that the LIBS system's accuracy and repeatability were sufficient to proceed with an in-plant demonstration.

Discussions then centered on the nature of the demonstration unit, with PPG deciding that the sensor should be amenable to analyzing other minerals in addition to ulexite, the primary material of interest to PPG. This necessitated changing the sensor from an on-line design to an off-line design. Analyzing the ulexite off-line is not expected to change the test results, since the time scale over which the ulexite composition is likely to significantly change is at least one day, and probably much longer. The benefits of being able to utilize the sensor unit in the future for minerals other than ulexite are of much greater significance.

A material that Mr. Streicher suggested for immediate testing is limestone that was used to remove volatilized compounds from plant exhaust gases. Samples of this material have been delivered to ERCo during the current quarter, and will be tested in the sensor prior to delivery to PPG.

3. Sensor Design

A schematic diagram of the LIBS ulexite sensor is shown in Figure 1. The sensor will fit on a rolling cart. A technician will take a sample of ulexite and place it in a sample holder. The sample holder will then be placed into the sensor unit through the access door. Inside the sensor is the laser head and optics necessary to analyze the ulexite. The laser head is powered by the power supply on the lower level of the cart, and the LIBS spark light is carried by a fiber optic cable to the spectrometer, also on the lower cart level. A PC analyzes the results and controls the process via ERCo's automated LIBS analysis software.

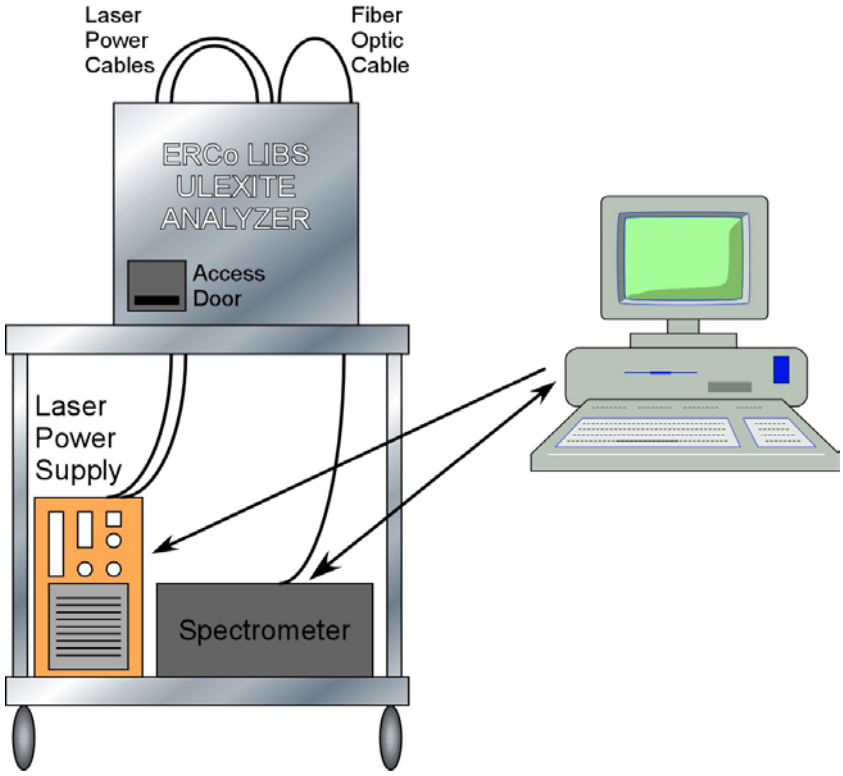

Figure 1: Schematic Drawing of LIBS Ulexite Sensor

Plans for Next Quarter:

Construction of system will be completed in this quarter, and the system will be taken to the Chester plant for testing.

Patents: N/A

Publications/Presentations: N/A

Milestone Status Table:

ID Number	Task / Milestone Description	Planned Completion	Actual Completion	Comments
1	Laboratory Development			
1.1	Facility Modification	9/30/01	9/30/01	
1.2	Testing	3/31/02	2/28/02	
1.3	Initial Software Development	3/31/02	3/31/02	
1.4	Performance Evaluation	3/31/02	3/31/02	
2	Sensor Fabrication			
2.1	Facility Construction	9/30/02	8/31/02	
2.2	LIBS Testing	8/31/03		Ongoing
2.3	Modifications to PPG Facility	12/31/03	3/31/04	Not necessary
2.4	Procure System	6/30/04		Ongoing
3	Sensor Testing			
3.1	Testing at PPG	2/28/05		To commence in 6/04
3.2	System Integration	12/31/04		

Budget Data (as of 12/31/03):

			Approved Spending Plan			Actual Spent to Date		
Phase / Budget Period			DOE Amount	Cost Share	Total	DOE Amount	Cost Share	Total
	From	To						
Year 1	4/01	12/01	423,178	181,501	604,679	47,184.00		47,184.00
Year 2	1/02	12/02	509,525	710,613	1,220,138	361,692.58	200,316.42	562,009.00
Year 3	1/03	12/03	506,110	717,688	1,223,798	268,803.84	303,821.00	505,451.47
Year 4	1/04	3/04				107,481.03		107,481.03
Year 5								
		Totals	1,438,813	1,609,802	3,048,615	785,161.45	504,137.42	1,289,298.87

Improvement of Performance and Yield of Glass Fiber Drawing Technology

Sanger: State of Ohio

ID14347, CPS#none

QUARTERLY PROGRESS REPORT

Project Title: Improvement of Performance and Yield of Glass Fiber Drawing Technology

Covering Period: January 1, 2004 through March 31, 2004

Date of Report: April 30, 2004

Recipient: State of Ohio, Office of Energy Efficiency
77 S. High Street
Columbus, OH 43215-6108

Award Number: DE-FC07-02ID14347

Subcontractors: Cleveland State University

Other Partners: PPG Industries Inc
Schott Glas
Johns Manville
U.S. Borax

Contact(s): Dr. Phillip A. Sanger -Principal Investigator
(216) 687- 4565
p.sanger@csuohio.edu

William L. Manz -Business Manager
(614) 466- 7429
WManz@odod.state.oh.us

Project Team:

DOE-HQ Team Leader:	Elliott Levine
DOE Regional Team Leader:	Brian Olsen
DOE Project Manager:	Glenn Doyle
DOE Contract Specialist:	Tom Reynolds

Project Objective: Investigate the basic science of continuous glass fiber drawing and use that information to improve the drawing process: 1) demonstrate reduced break frequency on a state of the art fiber-drawing machine from 1 break per hour to 1 break per 4 hours, 2) reduce fiber diameter variation, 3) drive toward six-sigma* quality through process control and computer simulation.

Background: Fiber breakage is the single most important process variable in the drawing of continuous glass fibers limiting fiber quality and production throughput and resulting in over 500 10^9 BTU of energy wasted annually. Continuous glass fiber drawing in "state of the

art" glass industrial facilities is accomplished in the simultaneous drawing of up to 5000 filaments from a single bushing. The perturbation caused by the breaking of one filament which typically occurs once per hour quickly propagates toward disruption of all 5000 filaments. During the recovery time of 5-10 minutes, the glass is continuing to ooze through the bushing holes. Over 67,000 tons of unrecyclable glass annually and all the energy invested in the melting and forming of this wasted glass is lost. To address this problem, this project will apply six sigma quality methodology combined with fundamental glass science to reduce breakage, increase throughput and improve the quality of glass fiber.

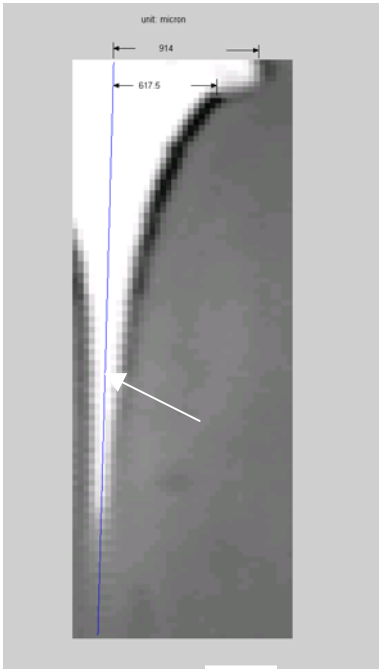

Figure 1 Cone shape as seen in the plane of the bushing.

Status: The drawing tower has been running in a continuous mode since our last report. Large leaps in validation of simulation models and identification of main effects has been realized. Advancements in photography and pyrometry techniques indicated by the simulation and data gathering are being effected. Bi-weekly conference calls presenting new data and our observations with our glass partners have created energetic discussion and new insights to the continuous glass drawing process.

Task 1 Build and Install Glass Fiber Drawing Tower
No activity this quarter.

Task 2 Develop diagnostic Instrumentation

As a result of our insights in the glass drawing process, we have put our in line glass fiber diameter measurement effort on hold. While variation in glass fiber diameter (and call down weight) is a vital performance parameter, our project has concluded that it is of only secondary importance to fiber breakage. On the other hand, **simultaneous measurement of cone shape and exiting glass temperature** is key to predicting the probability of breakage.

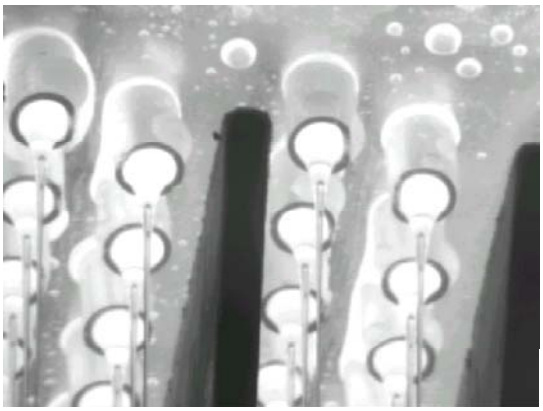

The cone profilometer that we developed on this program has one major limitation. In order to get a clear view of the cone, we located the camera in the same plane as the bushing. A clear cone shape was thus obtained as shown in figure 1. The resulting limitation is that we can only obtain cone shape information from the few cones located on the edge of the bushing. The pyrometer did not have this limitation since it looks up at the bushing from the bottom at approximately a 45 degree inclination.

In the process of evaluating our data, we observed that cone information could also be obtained from a camera in the 45 degree inclination (figure 2). In figure 3, the cone is clearly spotlighted against the dark background of the end of the tip. If the camera is orientated such that all the tips of a row are aligned, then any cone diameter at a distance of the tip radius plus the tip wall thickness can be measured. We are modifying our instrumentation to make this measurement. By combining the glass temperature at the tip with the cone diameter, the program has the potential of fully defining breakage at any tip in a bushing.

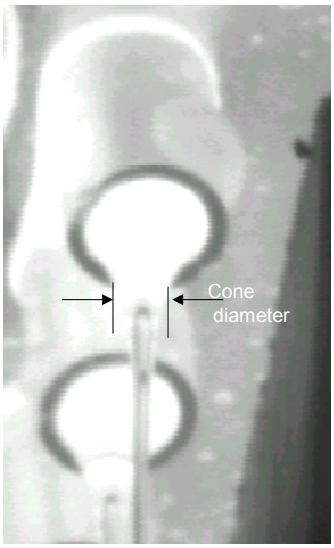

Figure 3 Cone can be deduced from the cone diameter measured only 1-2 mm away from the tip.

Task 3 Develop simulation models

The development of our simulation model was completed last year. This quarter we went beyond our base model by including surface tension, air drag, and gravity to make sure that we were correct in neglecting these effects in our main model. We were correct: the difference between the stress computed using our main model and this latest modification is only 0.1%

Task 4 Optimize Glass Drawing Process

Our previously derived theoretical transfer function indicated that the break rate is critically dependent on the ratio of glass viscosity at the tip-exit and cone length. This ratio can be controlled by the fin position and entrained air temperature. As these theoretical insights presented a new perspective to our industrial sponsors, we focused on their validation with the help of our glass-fiber drawing tower, currently in full-scale operation.

From the observation of a dramatic worsening of front-row performance illustrated in figure 4, we confirmed one beneficial lesson for industry: keep the entrained air hot or block it altogether and dramatically reduce breakage.

Similarly, we found that by slanting the fins side-to-side we were able to deliberately control where breaks occur. When the fins were slanted such that the left

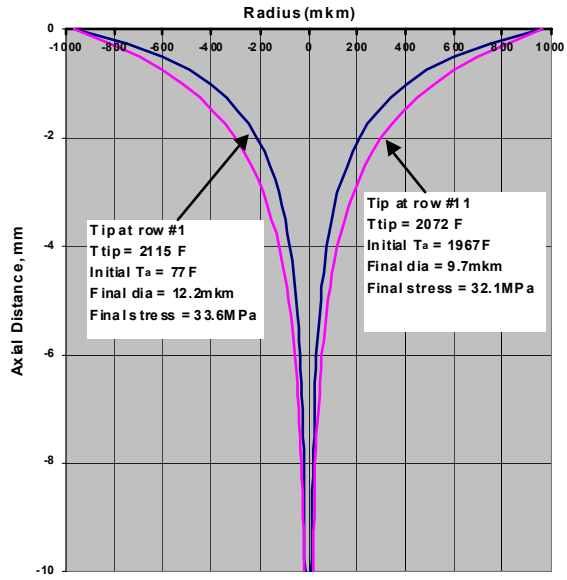

Figure 4 The entrained air forcefully cancels the advantage of hotter tips in the first row of the bushing and drives their break rate up to that of the back row, whose tips are colder by 43°F !.

side was raised, this side had eight breaks on the left and none on the right. When right side fins was slanted up, ten breaks occurred on the right and none on the left.

As the main driver in this project is improving our partners' productivity, we have initiated regular conference calls to discuss our findings with their engineering teams. We found that the following results establish new focus to their process control strategy as these results are entirely new to the industry. These findings are as follows: 1) establishing of a transfer function based on first-principles not only helps with crucial insights but it will also lead to a comprehensive process design in the near future, 2) the filament diameter per se has a negligible effect on stress and breakage, and 3) the cone length can be usefully characterized by measuring it's attenuation in the upper jet region, i.e. over the first three mm.

Plans for Next Quarter:

Complete the transfer function validation through the tests of "main effects." Optimize the design to center the process. Allocate tolerances to the key process variables to keep the process within the desired break rate. Modify cones imaging diagnostic software to determine cone shape from a 45 degree inclination looking up at the bushing

Patents: One provisional patent disclosure on the technique for measuring the dimensional characteristics of a fiber bundle.

Publications/Presentations:

- Presentation to DOE Glass Project Review in Oct 2002
- Presentation to DOE Glass Project Review in September 2003
- Presentation to the 2003 Glass Problems Conference, October 28, 2003

Milestone Status Table:

ID Number	Task / Milestone Description	Planned Completion	Actual Completion	Comments
1	**Build and Install Drawing Tower**			
1.1	Install tower	1/10/03	3/20/03	
1.2	Complete debug process	05/15/03	4/20/03	
1.3	Install new design of bushing	11/15/03	8/30/2003	
2	**Develop diagnostic instrumentation**			
2.1	Install IR and high speed photo system	03/01/03	9/10/2003	
2.2	Implement dimensional characterization process	09/15/03		Develop simultaneous cone shape and tip temperature across the entire bushing

ID Number	Task / Milestone Description	Planned Completion	Actual Completion	Comments
3	**Develop simulation models**			
3.1	Initiate testing of models	12/20/02	11/30/02	
3.2	Complete transfer function	04/16/03	4/30/03	
4	**Optimize process**			
4.1	Validation	07/30/03	03/15/04	
4.2	Demonstrate improved process	03/15/04		Improved fins and tip covers are being fabricated
5	**Disseminate technology**			
5.1	Hold first tech transfer training session	10/30/02	10/30/02	
5.2	Start final partner implementation	05/30/04	02/23/04	
6	**Final Report**	08/30/04		

Budget Data (March 31, 2004):

			Approved Spending Plan			Actual Spent to Date		
Phase / Budget Period			DOE Amount	Cost Share	Total	DOE Amount	Cost Share	Total
	From	To						
Year 1	July 11, 2002	July 30, 2003	$554,014	$166,070	$720,084	$531,676	$255,952	$787,628
Year 2	August 1, 2003	July 30, 2003	$419,935	$122,525	$536,410	$214,046	$125,104	$339,150
Totals			$967,899	$288,595	$1,256,494	$745,722	$381,056	$1,126,778

Advanced Oxy-Fuel Front-End System

Mighton: Owens Corning

GO13091, CPS#14233

As of May 19, 2004, the recipient hasn’t submitted any reports to the Golden website. It is expected that a comprehensive report will be submitted soon detailing work to date and subsequent quarterly reports will follow.

Energy Efficient Glass Melting: The Next Generation Melter

Rue: Gas Technology Institute

GO13092, CPS#14231

QUARTERLY PROGRESS REPORT

Project Title	Energy-Efficient Glass Melting - The Next Generation Melter
Covering Period	January 1, 2004 through March 31, 2004
Date of Report	April 30, 2004
Recipient	Gas Technology Institute 1700 S. Mt. Prospect Rd. Des Plaines, IL 60018
Award Number	DE-FC36-03GO13092
Subcontractors	A.C. Leadbetter and Son, Inc. Fluent, Inc. Praxair, Inc.
Other Partners	NYSERDA – project sponsor GTI Sustaining Membership Program (SMP) – project sponsor Gas industry through FERC funding – project sponsor CertainTeed Corp. Corning, Incorporated Johns Manville Owens Corning PPG Industries, Inc. Schott Glass Technologies, Inc.
Contacts	David M. Rue Manager, Industrial Combustion Processes Gas Technology Institute 847-768-0508 david.rue@gastechnology.org

Project Team

Elliott Levine
Glass Team Leader
U.S. Dept. of Energy
OIT, EE-20
1000 Independence Ave., SW
Washington, DC 20585-0121
202-586-1476
elliott.levine@ee.doe.gov

Brad Ring
Project Monitor
U.S. Dept. of Energy
Golden Field Office
1617 Cole Blvd.
Golden, CO 80401
303-275-4930
brad.ring@go.doe.gov

Beth H. Dwyer
Reports Monitor
Golden Field Office
1617 Cole Blvd.
Golden, CO 80401
303-275-4719
Beth.dwyer@go.doe.gov

Project Objective

The objective of this project is to demonstrate a high intensity glass melter, based on the submerged combustion melting technology. This melter will serve as the melting and homogenization section of a segmented, lower-capital cost, energy-efficient Next Generation Glass Melting System (NGMS). After this project, the melter will be ready to move toward commercial trials for some glasses needing little refining (fiberglass, etc.). For other glasses, a second project Phase or glass industry research is anticipated to develop the fining stage of the NGMS process. Overall goals of this project are:

- Design and fabrication of a 1 ton/h pilot-scale submerged combustion glass melter,
- Extensive melting of container, fiber, flat, and specialty glass formulations,
- Detailed analysis of the product glasses,
- Preparation of a Fluent-supported CFD model of the melter to be used in parallel with further development of the NGMS technology,
- Physical modeling of the NGMS process to determine energy savings, cost savings, environmental improvements, and use of waste heat for production of needed oxygen,
- Development of a commercialization plan and timeline for further, needed components and integration of the NGMS technology.

The Work Breakdown Structure and schedule are presented below. The project team recognizes that further work will be needed after this project to bring the critically-needed NGMS into industrial use. To expedite that development, the work in this project will focus in three areas needed to demonstrate the melting and homogenization steps of the NGMS technology and to prepare for further work to commercialize NGMS. These work areas are:

- Design, fabrication, and operation of a pilot-scale melter with analysis of product glass,
- Supported CFD modeling on the melter that is available to all users,
- Physical modeling and energy balances for the full NGMS with specific planning for further steps leading to commercial implementation.

Work in each project year is divided into Tasks with milestones at the end of many of the Tasks. The integrated Task Schedule enables project team members to assign labor appropriately and to follow a critical path to reach all milestones and objectives toward the overall goal of design, modeling, demonstration, and analysis of this melting technology.

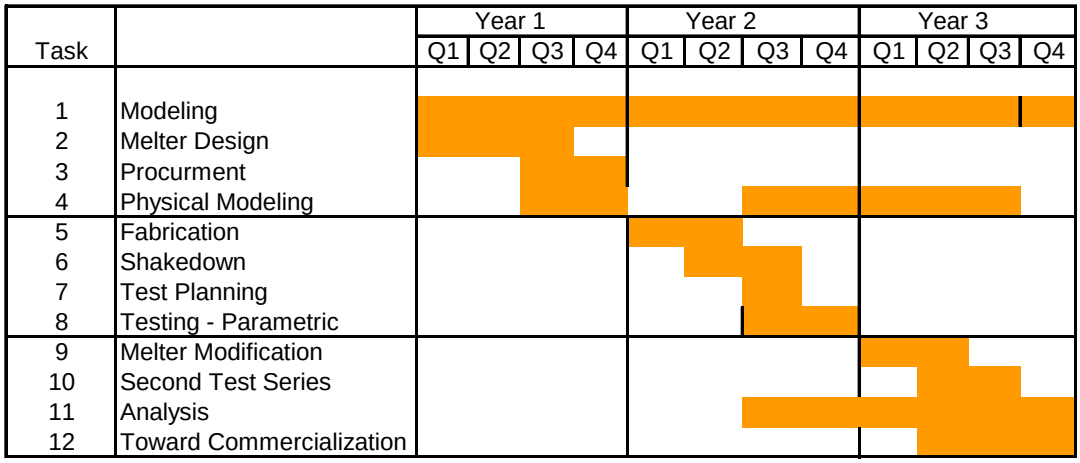

Milestones are placed at the end of many project Tasks to help sponsors and team members evaluate project technical progress on time and financial tracking. The milestones shown below will serve throughout the project as a gauge to successful completion of the work.

Year 1 Milestones	• Complete CFD model to be used by team members to design pilot scale melter • Design pilot scale melter • Procure all equipment and components for the melter in preparation for fabrication
Year 2 Milestones	• Fabricate and shake down of the pilot scale melter • Prepare test plan including compositions of glasses to be melted • Finish all pilot scale melting tests and collect samples for analysis • Complete detailed analyses of product glass properties and quality
Year 3 Milestones	• Modify melter, as needed, for second test series • Finish second test series, including at least one long term test, and all glass analysis • Finalize CFD model of the melter usable by all CFD operators • Finish physical material and energy balance model of next generation melting system (NGMS) process including utilizing waste heat for oxygen production • Complete plan for commercialization, including needed developments and stages

Go-no-go decision points are placed at the end of the first and second years of the project. At these times, the project team and sponsors have the opportunity to assess project progress and decide on continued work in the next phase (or year) of the project. The project team has every confidence that all project technical targets and milestones will be reached.

- The Year 1 go-no-go decision point criteria for continuing work will be design of the pilot scale melter and procurement of equipment and components on schedule and budet.
- The Year 2 decision point criteria for continuing work will be completion of pilot scale testing with glass formulations from all four industry segments and analyses of the product glasses.

Background

Any new melter must perform at least as well as refractory melt tanks by all technical, cost, operability, and environmental criteria while providing tangible benefits to the glass maker. A partial list of this daunting set of criteria, by category is shown below.

Criteria Category	Specific Criteria
Technical	High thermal efficiency, ability to make any glass formulation, can handle needed temperatures and oxidation conditions, meet glass quality requirements, integrates with batch handling and forming processes
Cost	Low melter cost, low maintenance cost, low energy cost, inexpensive environmental regulation compliance
Operability	Scalable from 25 to 700 ton/day, reliable, stable operation, easy to idle, ability to start and stop, ease of access and repair, fast change with glass formulation and color, no moving parts to be abraded by the glass
Environmental	Low air, water, and solid waste, recycle-friendly

The search for a lower-cost glass melter has led technologists to suggest a segmented melting approach in which several stages are used to optimize the melting, homogenization, and refining (bubble removal) instead of the current practice of using a single, large tank melter. In this segmented approach, separately optimized stages for high-intensity melting and rapid refining are expected to reduce total residence time by 80 percent or more. This approach to melting has come to be known as the Next Generation Melting System (NGMS).

The project team has identified submerged combustion melting (SCM) as the ideal melting and homogenization stage of NGMS. This is the only melting approach that meets and exceeds all the performance characteristics of refractory tanks and also provides large capital and energy savings to the glass industry. Submerged combustion melting is a process for producing mineral melts in which fuel and oxidant are fired directly into the bath of material being melted. The combustion gases bubble through the bath, creating a high heat transfer rate to the bath material and turbulent mixing. Melted material with a uniform product composition is drained from a tap near the bottom of the bath. Batch handling systems can be simple and inexpensive because the melter is tolerant of a wide range in batch and cullet size, can accept multiple feeds, and does not require perfect feed blending.

SCM was developed by the Gas Institute (GI) of the National Academy of Sciences of Ukraine and was commercialized a decade ago for mineral wool production in Ukraine and Belarus. Five 75 ton/day melters are in operation. These commercial melters use recuperators to preheat combustion air to 575°F. All melters operate with less than 10 percent excess air and produce NO_x emissions of less than 100 vppm (at 0 percent O_2) along with very low CO emissions. A photo of a commercial SCM unit in Belarus is shown below.

In SCM (shown below), fuel and oxidant are fired directly into the molten bath from burners attached to the bottom of the melt chamber. High-temperature bubbling combustion inside the melt creates complex gas-liquid interaction and a large heat transfer surface. This

significantly intensifies heat exchange between combustion products and processed material while lowering the average combustion temperature. Intense mixing increases the speed of melting, promotes reactant contact and chemical reaction rates, and improves the homogeneity of the glass melt product. The melter can handle a relatively non-homogeneous batch material. The size, physical structure, and especially homogeneity of the batch do not require strict control. Batch components can be charged premixed or separately, continuously or in portions.

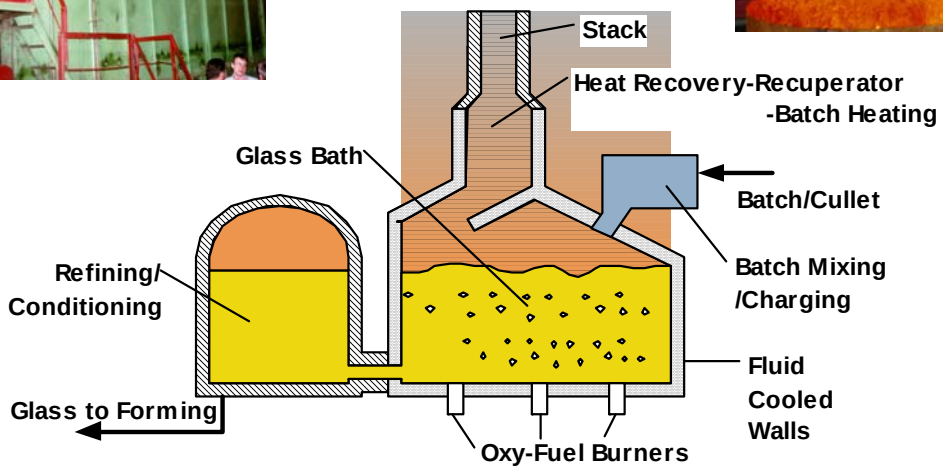

A critical condition for SCM operation is stable, controlled combustion of the fuel within the melt. Simply supplying a combustible fuel-oxidant mixture into the melt at a temperature significantly exceeding the fuel's ignition temperature is insufficient to create stable combustion. Numerous experiments conducted on different submerged combustion furnaces with different melts have confirmed this. Cold channels are formed that lead to unstable combustion and excessive melt fluidization. A physical model for the ignition of a combustible mixture within a melt as well as its mathematical description show that for the majority of melt conditions that may occur in practice, the ignition of a combustible mixture injected into the melt as a stream starts at a significant distance from the injection point. This, in turn, leads to the formation of cold channels of frozen melt, and unstable combustion. To avoid this type of combustion, the system must be designed to minimize the ignition distance. This can be achieved in three ways:

1) by flame stabilization at the point of injection using special stabilizing devices, 2) by splitting the fuel-oxidant mixture into smaller jets, and/or 3) by preheating the fuel/oxidant mixture.

Several types of multiple-nozzle air-gas burners that meet these requirements have been designed and operated industrially by the GI Ukraine. The burner is attached to the bottom of the bath with the main body outside the furnace. Only the surface around the exhaust of the slotted combustion chamber is in contact with the melt. Based on the research data available on thermal and fluid dynamic stability of the combustion chamber, a model for calculating the design parameters of submerged burners has been developed. GTI has extended this work to oxy-gas burners and found them to be stable during lab-scale melting of several materials including mineral wool, sodium silicate, and cement kiln dust.

Material in the SCM melt chamber constantly moves against the walls. A typical refractory surface would rapidly be worn away by the action of the melt. To address this, the melting tank is constructed of fluid-cooled walls that are protected by a layer of frozen melt during operation. This frozen layer is constantly formed and worn away during operation. The industrial SCM units used water-cooled walls. The project team intends to use high temperature fluids for cooling to allow useful heat to be recovered from this coolant. The heat flux through the frozen melt layer is determined by the properties of the processed material and the temperature and turbulence of the melt. It is, therefore, undesirable to superheat the melt because this increases the heat flux through the walls. Also, heat flux is lower with oxy-gas firing because melt turbulence is greatly reduced. Under normal operating conditions for silica melts, the oxy-gas heat flux is 7700 $Btu/ft^2 \cdot h$, equal to 2×10^6 Btu/h heat loss for a 75 ton/day melter. These values are relatively independent of the temperature of the coolant as any increase or decrease in the coolant temperature is accompanied by a compensating change in the thickness of the lining. Heat flux for a refractory tank is lower at 1800 $Btu/ft^2 \cdot h$, but with much greater surface area, the refractory tank loses more heat (2.55×10^6 Btu/h).

Special care must be taken to minimize fluidization of the melt which creates a large amount of droplets. These droplets, especially small ones which are formed when bubbles split, can be thrown out of the melt to a significant height. Consequently, the exhaust ducting must be protected from being covered by the frozen melt. In our design, this issue is resolved by removing combustion products through a special separation zone. In the separation zone, exhaust gas is forced to change direction and drop all liquid carryover droplets. The roof of this zone is sloped so droplets can easily be returned to the melter. This approach also reduces the necessary fluid-cooled surface area around the melting zone.

GTI holds the exclusive, world-wide license to SCM outside the former Soviet Union. Recognizing SCM's potential, GTI has operated a laboratory-scale melter with oxy-gas burners and produced several melts. Evaluation of the process has shown its potential for glass production when combined with other technologies for heat recovery, batch handling, refining, and process control. The photo above shows melt collection from GTI laboratory SCM testing.

Waste heat recovery is critical to reach high energy savings with NGMS. Adaptation of Praxair's Oxygen Transport Membrane (OTM) technology to the melter will be evaluated in this project. Praxair has been the world leader in the development of oxygen transport membrane (OTM) technology. The OTM technology is based on a class of ceramic materials that, when operated at temperatures above 500ºC, can separate oxygen from air with infinite selectivity. Because of the high temperature of operation, opportunities exist for integrating OTM oxygen

production with the glass melting process to utilize waste heat. This integration is expected to result in increased energy efficiencies, reduced oxygen costs and emissions, and potential carbon dioxide sequestration.

Praxair's efforts will focus on developing and simulating OTM processes that would be ideally suited for glass melting furnaces. A multitude of process configurations will be designed. Of these processes, the top two or three configurations will be selected based on process efficiency, emission levels, simplicity, and level of integration. A preliminary economic analysis then will be performed on the selected process cycles.

The Glass Industry Technology Roadmap cites the need for a less capital intensive, lower energy cost, and cleaner way to melt glass. Incremental changes to current melting practices will not stop the loss of furnaces, jobs, and companies to the competition from alternative materials and international glass makers. The Roadmap sets high strategic goals of 20 percent cost reduction, six sigma quality, 50 percent decrease in the gap between actual and theoretical energy use, and 20 percent decrease in air emissions. At the same time, the Energy Efficiency technical area calls for 'New Glass melting technologies'. This project addresses the following Needs expressed in the Roadmap:

- Accurate validated melter model (Energy Efficiency) – developed and supported by Fluent
- Improved thermal efficiency (Energy Efficiency) – the gap between actual and theoretical energy use is decreased by 50 percent
- Superior refractory materials (Energy Efficiency) – over 80 percent of refractory is eliminated because refractory walls are replaced with fluid-cooled walls with heat recovery
- Lower production cost (Production Efficiency) – melter cost at 55 percent lower, energy cost 23 percent lower, and glass production cost (capital, labor, and energy) 25 percent lower
- Decrease air emissions (Environmental Performance) – 20 to 25 percent decrease in air emissions from higher efficiency while NO_x is reduced over 50 percent (to under 0.35 lb/ton)

This project will demonstrate that the submerged combustion melter is ideally suited for technical and cost reasons, and better suited than any other melting approach, to be the melting and homogenization stage of an NGMS process. Also, the quality of glass produced and the flexibility of the melter to integrate with other processes will expedite development and commercial application of the full NGMS process. After this project, the melter will be ready to move to commercial trial for fiberglass and other glasses needing little or no refining. For other glasses, glass industry research or a Phase II project is expected to demonstrate rapid glass refining and to integrate the NGMS melting and refining stages.

Development of a new glass melting technology is a challenging undertaking, and no attempt to replace refractory tank melters has succeeded in the last 100 years. SCM, however, has been operated as an industrial-scale mineral wool melter for the last decade and has proved highly reliable. The industrial units are air-gas fired, but GTI has demonstrated smooth operation of oxy-glass burners on a 300 lb/h melter with several siliceous melts. This experience provides a solid basis for extending SCM to industrial-glass production.

A number of hurdles must be overcome to develop SCM into the NGMS melter and to develop the full NGMS process. The wide glass making, combustion, modeling, and engineering knowledge and experience of the project team assure the technical feasibility of this technology. No other project in recent memory has captured the commitment of such a large portion of the glass industry. This strong support makes clear that there is a great need for a

revolutionary new melting technology and that these glass industry experts believe the melting technology to be demonstrated in this project is technically feasible and meets all the cost savings, energy reduction, emissions reduction, and operability needs of the glass industry.

Status – Work This Quarter

Work this quarter included 1) pilot melter design, hardware selection, and ordering, 2) preparation for physical modeling of the submerged combustion melter, and 3) efforts to finalize the project subcontracts and glass company consortium agreement.

Pilot-Scale Melter Design

The project team devoted significant effort this quarter to the design of the pilot scale melter. Peripheral equipment around the melter will be designed and installed that can work with both the existing small melter and the new 1 ton/h melter. With that in mind, efforts focused first on all components except the melter. The 1 ton/h melter itself if being designed by GTI engineers with support from Dr. Olabin of the Gas Institute of Ukraine. The 1 ton/h melter will be fabricated later, in time for testing planned for year two of the project. Efforts related to pilot melter components are summarized below.

Orders have been issued for all major components and installation is scheduled for June 2004. Piping, electrical, and utility requirements have been defined and specified.

A conceptual design for the glass batch unloading, weigh and delivery system to the melter was developed. This system will accept bulk mixed batch at the unloading station and transport it to an elevated “loss-in-weight bin”. From the loss in weight bin, the raw materials are metered at a controlled rate through a pair of screw augers and fed into the pilot melter. The support structure for all of this equipment was designed and is in the process of being finalized. Also, an exhaust system for the pilot melter has been designed and includes a cooling fan, an exhaust fan, and baghouse. Additionally, a cullet discharge and conveying system was designed to facilitate cullet removal during upcoming test melts.

Drawings of the current pilot melter and the peripheral equipment concept design are shown below.

EXISTING PILOT MELTER

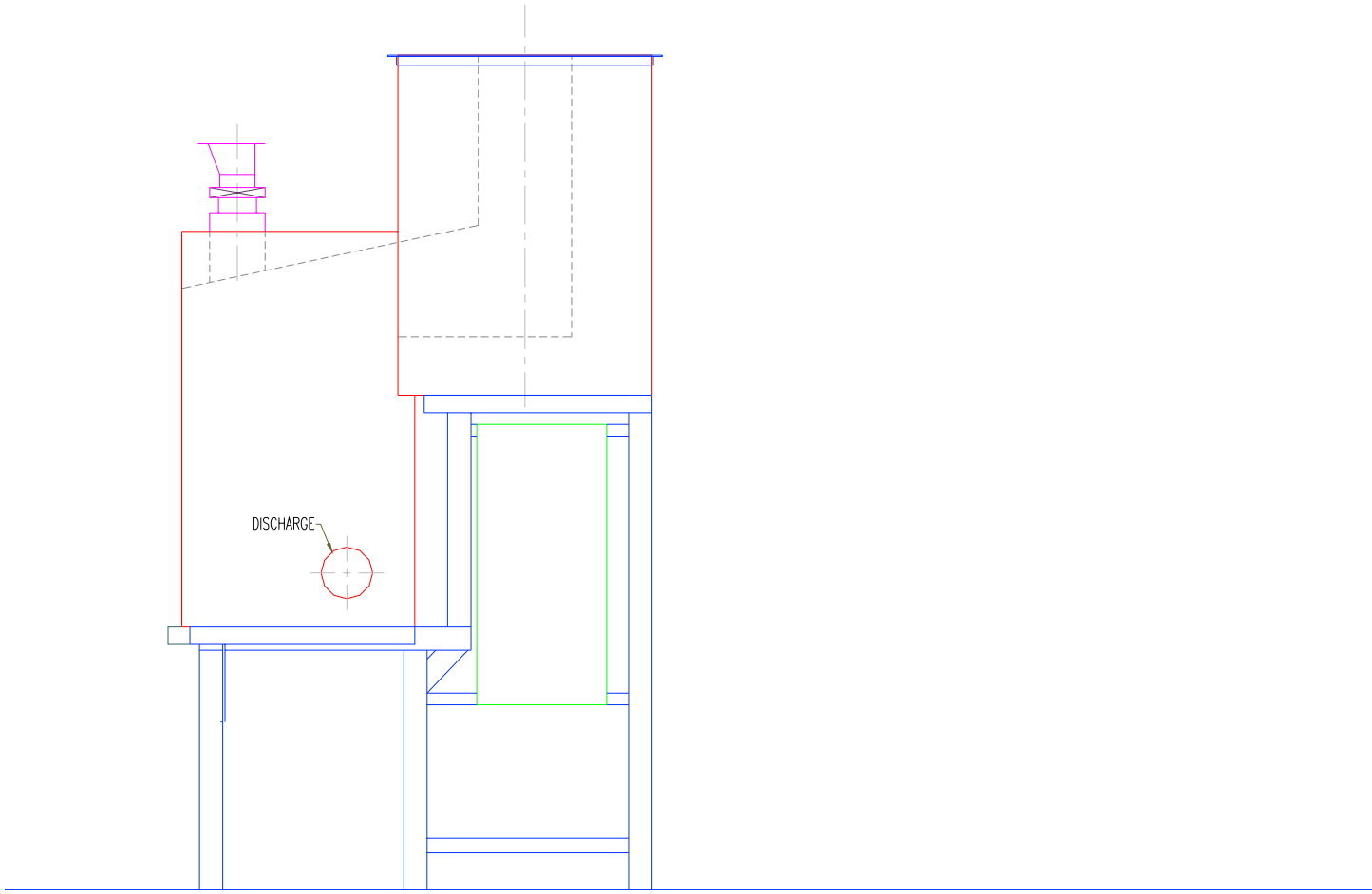

RIGHT SIDE ELEV.

LAYOUT OF BATCH FEED SYSTEM AND EXHAUST SYSTEM

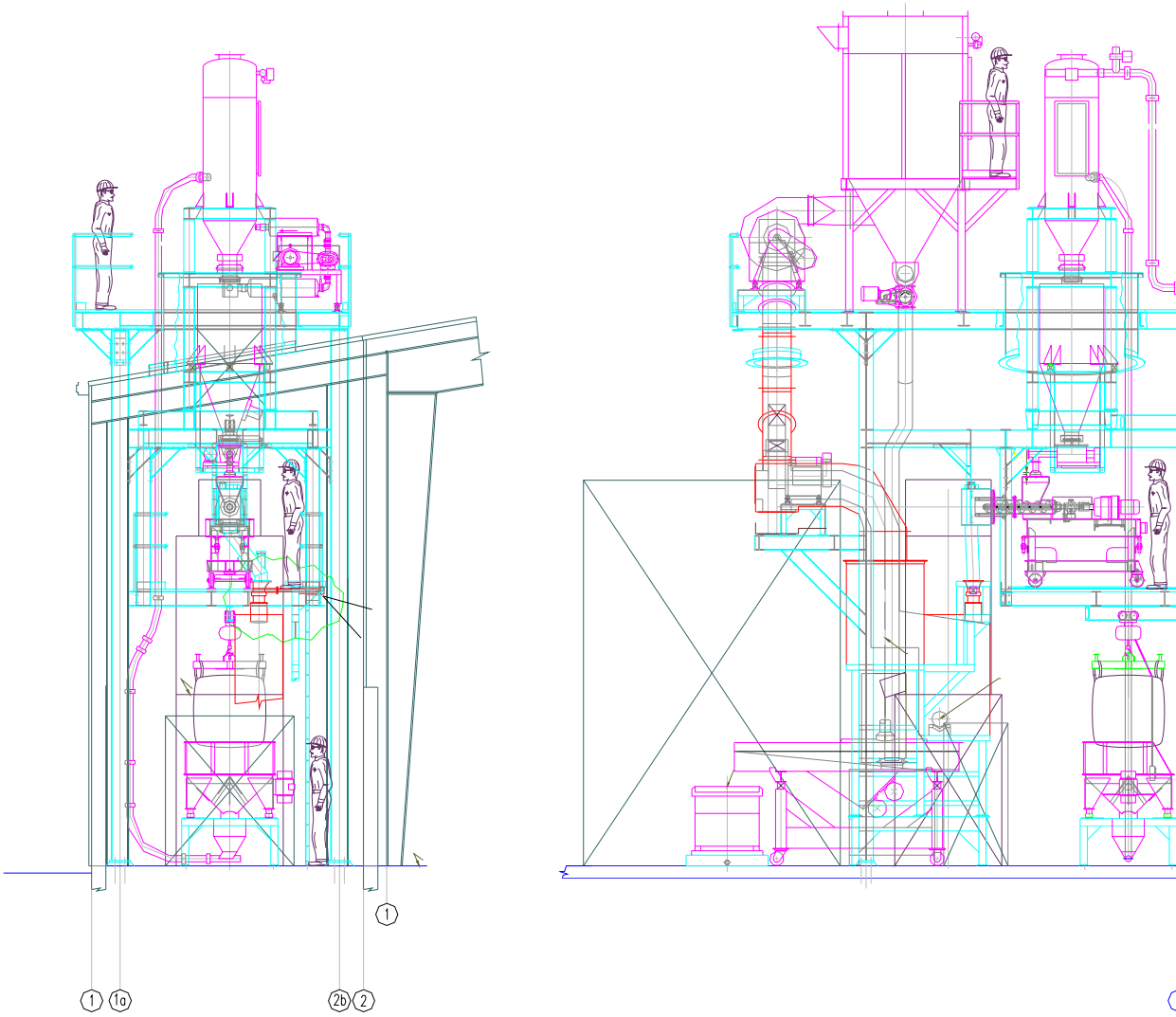

Physical Modeling

The objective of the physical modeling is to assist the design of the proposed glass melter. The physical model will be at a reduced linear scale (6 to 1) that capable of simulating,

1. The flow patterns
2. The response time/curve
3. Temperature at various locations of the full scale model

Results will serve two purposes: first, to validate the analytical model. And, second, to provide response curve to identify design parameters and ranges of operations.

PARAMETER IDENTIFICATION

A cause and effect analysis was conducted to identify all potential operation and design parameters (summarized in the following table). All parameters that can potentially influence the outcome were also categorized into three major categories, constant (C), controllable parameters (CP), and noise (N). These identified parameters will be built into the test matrix and experimentation apparatus so that the experimentation yields the flexibility in accommodating them.

EXPERIMENTAL PROCEDURES

In view of the number of design and operational parameters that can associate with the experimentation, the physical modeling effort is separated into two major phases, screening phase and optimization phase.

The objective in the screening phase is to determine a number of major control parameters generated in the previous section that have the higher effect on the outcome. In our case is the response curve characteristic. These set of design and/or operational parameters are then carried over to the optimization phase for detailed study. A Planket-Burmann screening will be used for this phase of experimentation.

The objective of the optimization phase is to take the set of major control parameters and conduct a more comprehensive study on it. Matrixes to be implemented can be a response surface design or Taguchi matrix. The exact level should be determined after the screening phase is carried out and number of major parameters identified.

EXPERIMENTAL APPARATUS

The experimental apparatus was designed so that the parameters identified can be measured per the objectives of this physical modeling. Despite the fact that the exact concept and associating dimensions of the physical model are not yet determined, supporting instrumentation and the output measurements that need to be collected can still be identified. The current physical modeling adapts the dimensional analysis basing on the similarity theory to simulate at a reduced scale. The instrumentations that will be involved will be separated into three areas. Namely, flow pattern visualization, temperature mapping, and response time/curve measurement.

Model Scale

A reduced linear scale of 6:1 is proposed. Base on the target full-scale melter with capacity at 1 ton/hr, a submerge melter can take a physical measure (wetted volume) of 8’L x 5’D x 4’ H in size. The reduced scale model hence measured 16”L x 10”D x 8” H. This size is sizable enough for detailed flow visualization yet provides with small enough volume to conserve simulating oil consumption. It also yields reasonable spatial resolution for temperature mapping and reduced air heating requirement capability in simulating combustion process.

To ensure similarity between the model and the submerged melting furnace, the equality of Reynold’s number and Grashof’s number need to be ensured. Following is the calculation for all the corresponding scales.

$$S = \frac{l_S}{l_M}$$

$$Gr = g\frac{l_M^3}{\nu_M^2}\beta_M \Delta T_M = g\frac{l_S^3}{\nu_S^2}\beta_S \Delta T_S$$

$$\frac{l_M^3}{\nu_M^2} = \frac{l_S^3}{\nu_S^2} \Rightarrow \frac{\nu_M}{\nu_S} = \left(\frac{l_M}{l_S}\right)^{3/2} = S^{-3/2}$$

$$\mathrm{Re} = \frac{V_M l_M}{\nu_M} = \frac{V_S l_S}{\nu_S} \Rightarrow \frac{V_M}{V_S} = \left(\frac{\nu_M}{\nu_S}\right)\left(\frac{l_S}{l_M}\right) = S^{-3/2} \cdot S^1 = S^{-1/2}$$

$$\frac{Q_M}{Q_S} = \frac{\rho_M l_M^2 V_M}{\rho_S l_S^2 V_S} \Rightarrow Q_M = Q_S \frac{\rho_M}{\rho_S} S^{-5/2}$$

where S is the linear scale, l_M is the linear characteristic length in the model, l_S is the linear characteristics length in the submerge melter, Gr is the Grashof's number, β is the thermal expansion coefficient, ν is the dynamic viscosity, Re is the Reynold's number, V is the velocity, Q is the volumetric flow rate. Once these generic scales are derived, the viscosity scale, velocity scale, flow rate scale can be easily realized.

The viscosity of the E-glass and Soda-lime glass at temperature 1300 and 1400 C is listed in the following table.

	Viscosity (cp)	
Temp (C)	E Glass	Soda-Lime
1300	4.00E+04	4.76E+06
1400	1.00E+04	2.08E+06

At the proposed linear scale, the viscosity scale was determined to be 14.7. Once the viscosity of the simulating oil is determined for the temperature range, one can choose the type of Polybutene that covers the range of viscosity as shown in the following viscosity-temperature curve for different Polybutenes solutions.

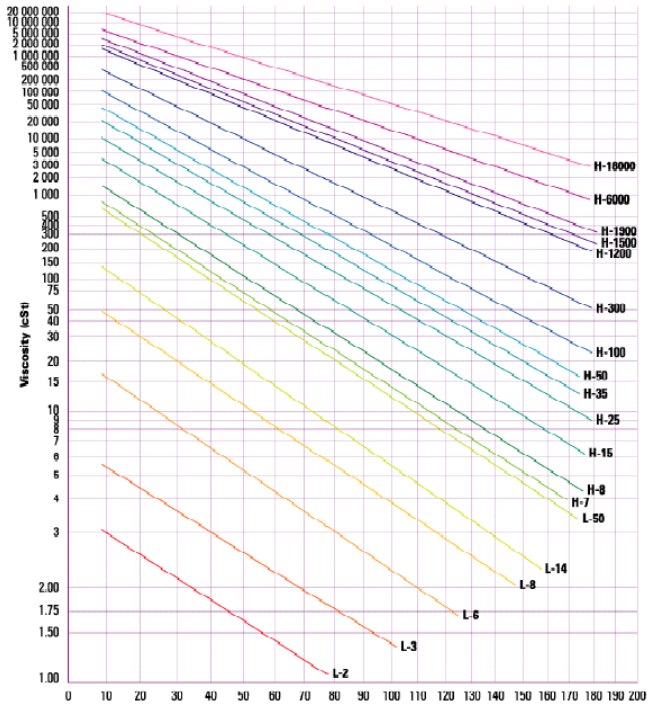

The data from the following table was read from the figure above. To simulate E-glass, H15, H25 and H35 can all be used in the physical modeling. However, by using either H23 or H35, the oil can be maintained under room temperature and heated up at a modest temperature by the submerge air stream (details to follow). To simulate soda-lime glass, H1200 can be the choice of solution.

		Viscosity (cST)		Temp Range (C)	
		For E Glass	For Soda-Lime	E Glass	Soda-Lime
H15	High	3.15E+03	3.74E+05	12	NA
	Low	7.87E+02	1.63E+05	28	NA
H25	High	3.13E+03	3.73E+05	23	NA
	Low	7.83E+02	1.63E+05	40	NA
H35	High	3.10E+03	3.68E+05	30	NA
	Low	7.74E+02	1.61E+05	50	NA
H1200	High	3.00E+03	3.57E+05	NA	26
	Low	7.51E+02	1.56E+05	NA	35

Flow Pattern Visualization

The flow pattern in a submerged melter is a lot more vigorous while compared to regular glass melter. To assist the design effort on the configurations and dimensions of the melter, the project team needs to gain insight on the flow pattern to elongate the initial melting time in the response curve, avoid dead volumes, prevent shortcut between feed and discharge…etc.

Due to the high 3-D turbulence level and the presence of two-phase flow in the vicinity of submerged jets, the localized velocity measurements with probing techniques do not seem to be a viable solution. The macroscopic 2-D and 3-D visualization, qualitatively or quantitatively, presented with a better opportunity to capture the flow pattern that addresses the concerns. However, 2-D measurements usually associate with a light sheet that will be diffracted/deflected in the presence of 2-phase flow as it will be in this study hence ruled out to be the choice of visualization technique.

As shown in the following figure, the dye indicator with digital camcorders is proposed for the following reasons,

1. Provides macroscopic 3-D flow patterns.
2. Suitable for the level of turbulence expected in the melter.
3. Suitable for the two-phase nature of the melter.

The digital camcorders are placed from the top, and sides to provide different view angles. Post data processing allows for synchronized multi-angle view so the vigorous 3-D flow pattern can be realized.

<u>Material Use</u>

- Oil – Polybutenes was choose to be the model oil due to the similarity of the viscosity temperature curve in the range of the tests.
- Dye indicator – The flow and mixing of the model liquid in the physical model is best simulated by means of colored indicators. For the glycerine-borax model liquid, the best results were obtained with two indicators. Namely, Neutral Red ($C_{15}H_{17}N_4Cl$) and Malachite Green ($C_{23}H_{25}N_2Cl$).
- Combustion product – As a limited amount of chemical reaction in the submerge melter has limited effect of hydraulic influences. Heated air will be used at a reduced temperature scale that maintains the same Grashof number between the model and the melter.

Category				Classification*
Material	Oil (Cp, ρ, μ)			CP
	Container	Plastic Glass		C
		Quartz		C
	Hot air injection	Temp		CP
		Flowrate		CP
		Pulsation	Amplitude	C/CP
			Phase difference	C/CP
Machine	Feed	Rate		CP
		Size		C
		Location		CP
		Configuration		C
		Batch/Cont.		C
	Flu Exhaust	Location		C
		Size		C
		Configuration		C
	Air port	Number		CP
		Location		CP
		Size		CP
		Configuration		C
	Container	Scale down		C
		Geometry	Rectangular	CP
			Round	C
			Oval	CP
Method	Tracing particle			C
	Liquid dye			C
Measurement	Feed	Temperature		OUT
	Discharge	Temperature		OUT
		Color (time)		OUT
	Container	Pressure		OUT
		Temperature		OUT
		Flow vis.		OUT
	Flu Exhaust	Temp.		OUT
Environment	Temp			Noise

* CP: Controllable Parameter; C: Constant ; OUT: Output; Noise: Noise

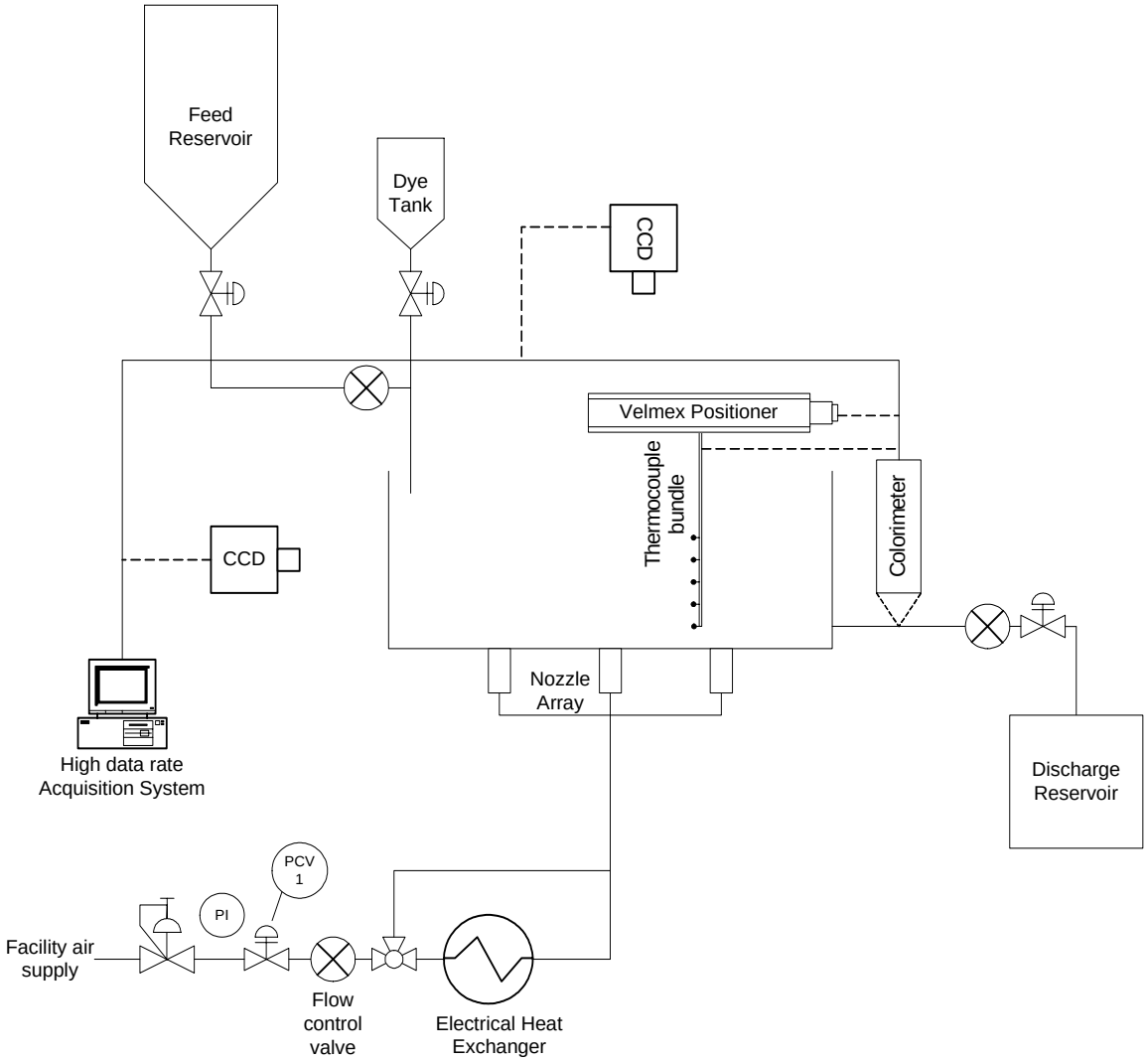

Temperature Mapping

One of the major objectives of the physical modeling is to provide benchmark empirical data for numerical simulation. The flow pattern visualization, as described in the previous section, will not provide quantitative data for this purpose. Therefore, temperature measurement is to serve as the linkage between the physical model and numerical simulations.

There exists one major difference between the submerge melter and fire-over-the melt type of melter. In the traditional fire-over-the-glass-melt type of melter, the flow patterns above and below the melt surfaces are related. In other word, the major driving force in the melt, natural convection, is driven by the heat release hence flow patterns above the melt. This is the major reason that all physical modeling dealing with the traditional melter model the exact scale of the crown region. In the contrary, flow patterns in the melt of a submerged melter is dominated by the viscous force of the submerge melter hence the combustion product flow pattern after leaving the surface of the melt has little to do with the flow pattern below it. Therefore, it introduces us with more flexibility to open the top and allows for flexible instrumentation implementation.

As shown in the figure above, the thermocouple bundle on a piece of rigid rod is connected with a 2-D positioning system which allows for a 3-D temperature mapping. The time average temperature as a function of location can be acquired and served as the validation to the numerical effort. The positioning system will be to implemented so that the obstruction to the camera view is minimized.

Response Time/Curve Measurement

All the operational and design parameters that will be implemented in the study are to answer one question, is there enough time for all the raw material to melt before exiting the glass melter? The response curve measurement is to serve just that purpose.

An online colorimeter, or spectrometer is to attach to the product exit of the melter providing the dye concentration as a function of elapse time.

Flow Arrangement

"Melt" flow arrangement

Oil used for simulation starts from the reservoir that is in a similar size of the physical model itself. It flows through a manual shut-off valve and a flow controller before charging to the physical model. In parallel, a dye container is branched into the feeding stream to provide predetermined rate of dye continuously or periodically to color the oil. The oil is then flow through the physical model and discharge through the exit, presumably on the other end of the physical model. Dyed model liquid flows through a colorimeter (prefer online, but can be offline with sampling port at the exit), a flow control valve (used to control the discharging rate and maintain the oil level in the physical model), and to the discharge tank (also in a similar size to the physical model).

Air stream

Facility air supply goes through pressure regulator, pressure indicator, and a three-way valve before passing through an electrical heat exchanger. Parallel to the electrical heat exchanger is a bypass should a higher flow rate without elevated temperature air is needed. The two streams are then combined and fit into the burner manifold. Air is then to go through the simulating oil and discharge into the ambient.

Subcontracts and Consortium Agreement

Efforts continued this quarter to complete the subcontracts between GTI and Fluent (for CFD modeling) and with Praxair (for Oxygen Transport Membrane assessment). Significant progress was made on both subcontracts, and most issues regarding intellectual property, work scope, and cost sharing have been resolved. GTI expects to complete both subcontracts next quarter and to initiate work on both efforts immediately upon completion of the subcontracts.

Project work was initiated this quarter. A subcontract was put in place with A.C. Leadbetter and Son, Inc. for design and fabrication of the pilot-scale melter. Several decisions were reached regarding the melter. First, the original plan for a capacity of 500 to 1000 lb/h was changed to 2000 lb/h. This decision was reached when analysis determined that this capacity is required to achieve desired mixing and stable melt removal. The second decision made was to continue with a recrangular melt tank shape.

Project managers put a sub-contract in place with Prof. Leonard Pioro, the developer of the SCM technology. In meeting with him in December, engineers discussed melter operation, melter components, and melter shape. The melter can have a round cross section. This offers several potential advantages, including lower heat losses through the walls and better control of batch charging and exhaust gas removal. At this time, however, the round cross-sectioned melter is unproven. The decision was reached to build the pilot melter based on the proven rectangular shape. CFD modeling and physical modeling of the melter will both include rectangular and well as round cross sectioned SCM units.

A meeting was held at GTI with representatives of the six glass company partners. At that meeting, details regarding the course of project activities were outlined, discussed, modified, and agreed to.

In response to the need to learn information on SCM glass melting at early as possible, the project team agreed to plan for at least two melting tests with the existing SCM pilot unit. The batch material will be supplied by the glass company partners, and they will also define glass sampling conditions and conduct analyses. The needed components for these tests, including the batch hopper, the charging system, the baghouse, the melt sampling system, etc., will be designed and fabricated with the intent of using the same components for the larger 1 ton/h pilot unit to be built for extensive testing in 2005. Work began this quarter on the conceptual design for the needed components and for the larger pilot melter. Detailed designs will be completed next quarter, and tests are planned for the second quarter of 2004.

The project team discussed the CFD modeling approach with the lead FLUENT glass modeler, and an agreement was reached on a multi-step modeling approach. As soon as the contract with Fluent is in place, the CFD work will begin, with GTI and the glass companies providing melter and glass property data, respectively. By the end of year one (September, 2004), an initial model will be developed and evaluated by the project team.

Physical modeling was also deemed to be crucial to understanding the melting system and to increasing chances of success. A GTI engineer was assigned the task of designing a physical model of the SCM unit. He will be assisted by engineers from Owens Corning and Corning with extensive physical modeling experience. During the first quarter of 2004, the scaled, dimensionless-unit based, modeling approach will be developed and reviewed. Work in quarter two of 2004 will focus on design and fabrication of the test unit at GTI. By the end of year one, initial physical modeling results for the rectangular melter using polybutene as a surrogate fluid will be completed. Polybutene, at near room temperature, has similar viscosity-temperature curves to those of molten glass compositions.

Work was also initiated this quarter in a number of related, and important, areas. First, literature searches continued. Part of this was contracted to Prof. Pioro so a full history of SCM development and theory of the technology would be available. Other literature reviews involved studying world literature, and translating from Russian and other languages, relavent papers. Second, plans were initiated to examine several phenomena that could impact on glass melting in the SCM unit. These include devitrification caused by the externally-cooled walls and metal contamination caused by contact of molten glass with the metal walls. Crucible tests will be designed and carried out by the glass company partners. Literature will also be reviewed.

Communications and education are important to the success of this project. A website will be established next quarter for faster communication between project team members, sponsors, and interested parties. This site will be maintained by GTI with links to all member organizations. The project team also agreed to visit Europe in the summer of 2004. The goal is to see several advanced European glass melters, to see evaporative cooling on melters in Latvia, and to see working SCM units for mineral wool production in Belarus. The hope is to combine this trip with a European glass meeting to learn even more about advanced glass melting activities.

Plans for Next Quarter

Work will be carried out next quarter on a number of project activities. First, the final agreements will be put into place the glass company consortium, Fluent (for CFD modeling), and Praxair (for OTM evaluation). With these agreements finalized, all project Tasks will be fully active. Work will be conducted in the following areas.

Modeling. Both physical and CFD modeling will be conducted. Physical modeling will be carried out by GTI with strong support from consultants and the glass industry partners (particularly Corning engineers). The SCM melter will be simulated with an emphasis on optimizing flow and mixing patterns while avoiding any by-passing or batch volatilization. Physical modeling will be carried out based on dimensionless number scaling using fluids (such as polybutenes) having room temperature viscosity-temperature curves similar to molten glasses. Next quarter, the work to assemble a test unit with all needed instrumentation will begin as dimensionless group modeling and properties data is collected and evaluated.

CFD modeling will be initiated immediately after completion of the Fluent subcontract. The first work will be to construct an appropriate mesh design. Calculations of flow patterns along with heat and mass transfer will be conducted. Then a complete combustion model will be incorporated. Because forced convection controls heat and mass transfer in the SCM, instead of natural convection that controls in a traditional tank melter, the model must be designed to incorporate the proper material heat transfer and flow behavior. This development will parallel work on physical modeling and testing.

GTI and A.C. Leadbetter have initiated design of the 1 ton/h pilot melter. The plan is to build the peripheral units (batch hopper, feeder, baghouse, melt removal, sample collection, etc.) first. These will be connected to the smaller, existing pilot melter for tests in the spring of 2004. The 1 ton/h melter will then be designed, fabricated, and installed for much more extensive testing in 2005.

Data collection will continue. This will include collection and/or translation of relevant SCM papers and publications, further discussions with Prof. Pioro, calculations and designs by Prof. Pioro and by Dr. Olabin of the Gas Institute of Ukraine. Articles related to compatible rapid refining techniques will also be collected and reviewed.

Peripheral questions will be outlined, and work started to evaluate them. These include determining any potential for devitrification in the SCM unit and assessing the possibility of metal contamination of the glass by melt reaction with the melt chamber walls. Literature will be reviewed. Experts will be consulted. Lab experiments, if needed, will be set up and carried out, probably by the glass company partners.

Patents

GTI holds world-wide rights to the submerged combustion melting technology outside the former Soviet Union. GTI also holds a patent covering portions of the technology. A new patent covering the combustion system used for oxy-gas firing was completed this quarter including all needed signatures. The patent application will be submitted with the U.S. Patent Office early in April.

The project team has agreed to form a consortium to develop the NGMS technology. GTI has agreed to provide the glass company members of this consortium royalty-free rights to submerged combustion melting for glass production. In return, the glass company consortium has agreed to support the project with cash, man-hours, and technical support. Other companies will be able to license the technology from the developing consortium. This arrangement is considered the most reasonable means to rapidly develop, commercialize, and disseminate the NGMS and submerged combustion melting technology.

Publications/Presentations

A number of presentations and papers have been published regarding submerged combustion melting and the NGMS technology. A presentation was made at a GMIC workshop held after the 7th International Conference on Glass Fusion in Rochester, NY held in July, 2003. A paper was presented at the second Natural Gas Technology Conference in Phoenix, AZ in February, 2004. Additional papers will be published throughout 2004. A presentation will be made at the DOE ITP project review meeting in June, 2004.

Milestone Status Table

This project is divided into twelve Tasks over a three-year period. Tasks 1 through 4 are scheduled for Year 1 (Phase I). Tasks 5 through 8 are scheduled for Year 2 (Phase II). Tasks 9 through 12 are scheduled for Year 3 (Phase III). Project work began this quarter and is completed covered within Year 1. Thirteen milestones have been defined covering the full project. Progress toward milestone completion is shown below.

Mile-stone	Milestone Description	Planned Completion	Actual Completion	Comments
1	Initial working CFD model written and tested	Sept. 2005		Begin next quarter
2	Design pilot scale melter	June 2004		Continued this quarter
3	Procure equipment for pilot scale melter	Sept. 2004		Started this quarter
4	Fabricate pilot scale melter	March 2005		
5	Prepare test plan	March 2005		
6	Complete pilot scale melting tests and collect samples	July 2005		
7	Complete all sample analyses	Sept. 2005		
8	Modify melter as needed	Dec. 2005		
9	Complete second test series	June 2006		
10	Finalize CFD modeling and physical modeling	Aug. 2006		
11	Complete OTM analysis	June 2006		
12	Complete development plan	Sept. 2006		

Budget Data

The DOE contract was dated September, 2003, and work began in Oct. of 2003. The NYSERDA contract for co-funding was finalized this quarter. Gas industry co-funding through FERC funds for $700,000 are in place, and the SMP portion of gas industry co-funding will be put in place during years 2 and 3 of the project. The glass industry consortium is working to finalize the consortium agreement. This agreement will be in place next quarter. At that time, GTI will enter into identical contracts with each of the six glass company partners. The overall project budget, and spending to date, is shown below. Only cash funding is shown. In-kind cost-sharing by Praxair, Fluent, and the six glass company partners is not shown.

			Approved Spending, $K			**Actual Spending, $K**		
Phase / Budget Period			**DOE Amount**	**Cost Share**	**Total**	**DOE Amount**	**Cost Share**	**Total**
	From	**To**						
Year 1	**10/03**	**9/04**	**1311**	**850**	**2161**	**365**	**6**	**372**
Year 2	**10/04**	**9/05**	**1335**	**300**	**1635**			
Year 3	**10/05**	**9/06**	**1186**	**300**	**1486**			
Total			**3833**	**1450**	**5283**	**125**	**0**	**125**

High Intensity Plasma Glass Melter

Gonterman: Plasmelt

GO13093, CPS#14232

QUARTERLY PROGRESS REPORT

Project Title: High-Intensity Plasma Glass Melter

Covering Period: 1/01/04 to 3/31/04

Date of Report: April 23, 2004

Recipient: Plasmelt Glass Technologies, LLC
2845 29th Street, Boulder, CO 80301

Award Number: DE-FC36-03GO13093

Subcontractors: James K. Hayward
InnovaTech Services, Inc.
N.Sight Partners, LLC
Laboratory of Glass Properties, LLC
Tooley Design Services

Other Partners: Advanced Glassfiber Yarns
Johns Manville

Contact(s): J. Ronald Gonterman, 270-524-5110, Ron@plasmelt.com
Michael A. Weinstein, 303-530-2727, Mike@plasmelt.com

Project Team: Elliott Levine (DOE Glass Industry Liaison), Brad Ring (DOE Project Officer), Carrie Capps (Project Monitor), Beth Dwyer (DOE Contract Officer), Matea McCray (DOE Technical Analyst)

Project Objective: Develop an efficient 500 lb / hr transferred arc plasma melting process that can produce high quality glass suitable for processing into a commercial article.

Background: The purpose of this project is to demonstrate the energy efficiency and reduced emissions that can be obtained through the use of a dual torch DC plasma transferred arc melting system. Plasmelt Glass Technologies, LLC was formed to solicit and execute the project, which will utilize a full-scale test melter system. The system is similar to the one that was originally constructed by Johns Manville, but Plasmelt has added significant improvements to the torch design and melter system. The original JM design has been shown to achieve melt rates 5 to 10 times faster than conventional gas or electric melting, with improved energy efficiency and reduced emissions. The Project began on 7/29/03.

Status: During this quarter, significant progress has been made. Most of the infrastructure and system fabrication are complete in the Plasmelt Boulder Lab. These include:

- Plasma Torches
- Power Supply and All Electrical Sub-systems
- Water Chilling and Cooling Systems
- Purge Gas Systems
- Melter Shell and Accessory Systems
- Vent Hood, Ductwork, and Blower System
- Electrode Positioning Systems
- Mezzanine Structure
- Glass Batch Handling Equipment
- Cullet Handling System

Glass melting began two weeks before the end of the March quarter. Thus far, we have conducted several preliminary runs aimed at de-bugging the process and testing different iterations of torch designs. Limited quantities of glass have been produced. The objective of this early melting work is to systematically search out and eliminate all process bugs as well as identify torch designs that will allow us to continuously operate the process for several hours. The pre-requisite must be met before we can earnestly conduct the process development work that is scheduled for April, May, and June. This process development work is our highest priority.

Results thus far are encouraging. The process is now operating under the approximate conditions that were in place when JM ceased their operations several years ago. We have been able to accomplish this re-construction work in less than six months of effort. During this time, a building was leased, equipment was acquired, evaluated, and refurbished. The building electrical system was upgraded to the required 1.5 Megawatts of power. A batch feeding system was acquired and installed that met the batch handling specifications that were identified. The melter was designed, fabricated, installed, and debugged. The venting system was designed and installed. Water cooling equipment was acquired, installed, and rendered operational. Purge gas (argon and nitrogen) capability now exists and has been interfaced with the torch operations. Several iterations beyond the JM designs have already been tested. These designs are toward the Plasmelt goal of improving the fundamental JM plasma torch design as a means to increase the torch life, reduce the maintenance costs, and improve torch reliability during glass melting operations. This design improvement work is expected to continue throughout the life of the 2-year program.

Work is still in progress to complete the designs of the glass delivery system that will transfer glass from the melter orifice to the marble machine. Preliminary designs have been completed by the Plasmelt design team consisting of Ron Gonterman, Mike Weinstein, AGY engineers, and our sub-contractor, Jim Hayward. The initial indications are that this new design will require a 6 to 12-foot long forehearth upstream of the marble machine. The marble machine has very specific requirements for the control of glass temperature and glass mass flow rates, which is the main reason for this marble production forehearth. The cost estimates for this preliminary design are significantly greater than the allowances that are now included in the approved overall plasma project budget. Therefore, we are in the process of investigating lower cost alternatives to marble forming as well as preparing a revised overall cost estimate for our Year 2 budget.

Unless additional funding is secured for Year 2, marbles will not be produced. The impact of this change will be to increase the risk that cullet from the melter will not be in a form that can be fiberized by our cost share partner—AGY. The fiberization of this glass was the most robust quality test that we could devise. Successful fiberization into 10 micron fibers would form a foundation for our work in other segments of the glass industry and provide data to these other segments that the quality was sufficiently high to be considered for their own quality assessment. Without convincing quality data, the probability is reduced that other segments will become interested in evaluating the technology.

The major goal of the plasma program, to produce a high quality glass, must not be compromised since this is a key requirement of the project. Our ability to acquire data to show the high quality nature of the glass is very straightforward with marble-making and fiber forming from these marbles. Any cullet form other than marbles will necessarily impart more risk to the program objective, so we are approaching this decision with a great deal of caution. A major decision must soon be made about eliminating the marble milestone from the program or securing additional funding.

A Market Study is being conducted by Gabe Tincher. The scope of work for this Study includes the identification of glass industry segments and companies that will find economic advantage by using the assumed attributes of the plasma melting system. In addition to the Market Study, a technical and economic analysis (TEA) is being performed to compare the projected operating and maintenance costs using the plasma melting system to the costs of the current systems used by the cost share partners. This TEA is built upon several assumptions that will be validated by the next six months of work in the research program. This

study will serve as the foundation for the development of a Plasmelt business plan in Year 2 in which our goal is broad implementation of plasma technology within the glass industry. The Study will also identify any likely early adopters of this technology, on which we plan to focus our initial efforts.

A Program Review is being held April 28 in the Plasmelt Boulder Lab. Attendees will include Plasmelt, AGY, JM, and key Plasmelt sub-contractors. This meeting will review all past accomplishments as well as the remaining Year 1 experimental plan. In early May, we expect to file for a Year 2 project extension with DOE in order to carry the Project beyond the first anniversary of July, 2004.

Plans for Next Quarter (April-June, 2004):

- De-bug and render operational the entire process
- Develop a stable 500 # / hr process
- Complete the experimentation to relate cullet quality to process operating conditions
- Conduct an energy balance at 500 # / hr
- Complete the market study and assess the opportunities
- Conduct an April Cost Share Partner Planning Meeting to review all Year One accomplishments and outline Year 2 milestones
- Complete a preliminary design of the controls package for the operation of the melter and accompanying systems
- Complete the design/engineering of the glass delivery system that will transfer glass from the melter drain orifice to the marble forming position
- Investigate lower cost alternatives to the marble-making process that will still allow the achievement of the program's glass quality assessment objectives

Patents: None

Publications/Presentations:

No publications/presentations were made during this reporting period.

Milestone Status Table: This should be a complete list of project milestones, anticipated completion dates and actual completion dates. The milestone identification number should correspond to the task numbers in your agreement to aid in tracking (example below).

ID Number	Task / Milestone Description	Planned Completion	Actual Completion	Comments
M 1	Project Startup: Establish WBS and Schedule, operating agreements, IP terms, subcontract agreements	10/31/03	10/31/03	Complete
M 2.1	Melter Design: Develop Project Request Documents, specifications, materials lists, engineering packages	10/31/03	10/31/03	Complete
M.2.2	Laboratory Preparation: Identify candidate facilities, sign lease agreements, establish environmental permits	12/31/03	10/31/03	Complete. Notification of environmental Exemption Letter received from Colorado DPHE
M.2.3	Construct Melter: Subcontract fabrication and construction, install melter at site	12/31/03	2/29/04	Most of the delay due to major change in the building electrical system upgrade by Xcel Energy. Melter construction and fabrication are now complete.
M 3	Market Survey	5/31/04		Work is underway and on-schedule.
M 4	Melter/Process Test Program: Startup and operation at 500 #/hr rate [GO/NO GO DECISION], preliminary energy balance, preliminary report	7/27/04		
M 5	Assess Glass Quality: marble forming installation, marble production and fiberizing testing [GO/NO GO DECISION]	1/31/05		
M 6.1	Optimization: Process refinement, energy balance updates [GO/NO GO DECISION]	6/30/05		
M 6.2	Final Reporting to DOE	7/27/05		

Budget Data (as of 3/31/04): The approved spending should not change from quarter to quarter. The actual spending should reflect the money actually spent on the project in the corresponding periods.

			Approved Spending Plan			Actual Spent to Date		
Phase / Budget Period			DOE Amount	Cost Share	Total	DOE Amount	Cost Share	Total
	From	To						
Year 1	7/28/03	7/27/04	$956,198	$394,119	$1,350,317	$460,198.33	$234,411.59	$694,609.92
Year 2								
Year 3								
Year 4								
Year 5								
Totals			$956,198	$394,119	$1,350,317	$460,198.33	$234,411.59	$694,609.92

*NOTE: $460,198.33 is the total amount of advance and reimbursement invoices that have been submitted by Plasmelt to DOE-Albuquerque: $215,000 cash advance + reimbursements of $245,198.33 ($13,712.37 + $43,101.55 + $28,525.55 + $34,148.55 + $31,124.77+ $50,419.95 + $44,165.59)

Development and Validation of a Coupled Combustion Space/Glass Bath Furnace Simulation

Petrick: Argonne National Laboratory (Techneglas)

CPS#01025

QUARTERLY PROGRESS REPORT

Project Title: Glass Furnace Model (GFM) Technology Transfer Program

Covering Period: January 1, 2004 through 31 March 2004

Date of Report: April 30, 2004

Recipient: Argonne National Laboratory
9700 S. Cass Avenue
Argonne, IL 60439

Award Number: *Follow-on Program to DE-SC02-97CH10875 and / DE-SC02-00CH11037*

Other Partners: Techneglas, Libbey, Inc., Osram-Sylvania, Owens Corning, Visteon

Contact(s):

Brian Golchert	Michael Petrick
630-252-6518	630-252-5960
bgolchert@anl.gov	mpetrick@anl.gov

Project Team: *Elliot Levine, OIT DOE–HQ contact; Matea McCray,DOE-ID, Project Mentor*

Project Objective: The objectives of the program are to transfer the ANL-developed Glass Furnace Model (GFM) to the glass industry and to promote its widespread use by providing the requisite technical support to allow effective use of the code. Project objectives will be accomplished through the following actions. A brochure will be prepared that describes the capabilities of the code and the support that will be provided to the user. The brochure will be mailed to a broad spectrum of glass industry representatives. The GFM code will be placed in ANL's Software Shop on the internet and will be readily available for licensing on-line through the laboratory's Office of Technology Transfer. Technical support will be provided to the code users and a GFM code user group (CUG) will be established. Every licensee will automatically become a member of the CUG and will be entitled to receive technical support at no cost throughout the duration of the technology transfer program. The level of support provided is expected to allow the licensee (user) to become proficient in the use of the code. The CUG members will meet periodically to discuss their experience and the results derived from the use of the code. Further improvements in the code that evolve from the technical support activity will be incorporated into the source code. At the conclusion of this program, the CUG members will be expected to define a mechanism that they would implement for provision of any additional support they may need in the long term.

Background: A substantial effort in the previous project was expended to develop the state of the art furnace model (GFM) that can be used to predict furnace performance. This validated model has been used by the industrial participants of the project to perform extensive parametric studies on their furnaces. These studies indicated that computer modeling is a cost effective method for improving furnace performance. In an effort to improve the performance of furnaces throughout the industry, the ensuing technical transfer program has been initiated to promote the usage of the GFM in the glass industry.

Status: Program progress is presented in accordance with the work breakdown structures adopted for the program. A brief summary of progress in tasks pursued during the last reporting period follows. Those tasks in italics are not applicable to the current quarter.

Task 1: GFM brochure prepared and mailed to glass industry companies. (01/04 to 03/04) In coordination with the GMIC, the DOE and the glass companies working on the project, a six-panel brochure was prepared and printed. A mailing list of potential users in the glass industry was created. The brochure was mailed to ninety glass industry representatives in the middle of March. The ANL technical transfer department prepared the license agreements and created the appropriate webpage for the ANL software shop. In addition, the code was modified to include logins and passwords that will expire at the end of the free technical support.

Task 2: Licenses for GFM available on ANL's software shop website (04/04)

Task 3: GFM users group formed (05/04)

Task 4: Technical support provided to GFM users (05/04 to 11/04)

Task 5: Periodic meetings of CUG held to discuss code usage and results (05/04 to 01/05)

Task 6: Long-term code support mechanism established by CUG membership (02/05)

Plans for Next Quarter:

Licensing of the GFM to interested users will commence at the start of April. Once licenses are signed, training/technical support of the new users will begin.

Patents: The Glass Furnace Model software (GFM 1.0) was copyrighted (May 14,2001).

The Glass Furnace Model software (GFM 2.0) was copyrighted (ANL-SF-01-030b) (May 17, 2002).

Milestone Status Table:

ID Number	Milestone Description	Planned Completion	Actual Completion	Comments
1	Brochure created and mailed	03/04	03/04	
2	Licensing becomes available via ANL software shop	04/04	04/04	
3	Technical support provided to code users	11/04		

Budget Data (as of 4/30/03): The approved spending should not change from quarter to quarter. The actual spending should reflect the money actually spent on the project in the corresponding periods.

			Approved Spending Plan ($K)			Provided to Date	Actual Spent to Date
Year/Budget Period			DOE Amount	Cost Share	Total	DOE Amount	DOE Amount
		From	To					
2004		January	March	70.0	n/a	70.0	258.0	78.2
2004		April	June	60.0	n/a	60.0		
2004		July	Sept	60.0	n/a	60.0		
2004		Oct	Dec	50.0	n/a	50.0		
2005		January	March	10.0	n/a	10.0		
2005		April	June					
			Totals	250.0		250.0	250.0	78.2

*Program started officially 01/01/04

Monitoring and Control of Alkali Volatilization and Batch Carryover for Minimization of Particulates and Crown Corrosion

Blevins: Sandia National Laboratories (Gallo Glass Co.)

CPS#01608

Quarterly Progress Report

Project Title: Monitoring and Control of Alkali Volatilization and Batch Carryover for Minimization of Particulate Emissions and Crown Refractory Corrosion in Glass Melting Furnaces

Covering Period: January 1, 2004 to March 31, 2004

Date of Report: April 28, 2004

Laboratory: Sandia National Laboratories
7011 East Avenue
Livermore, CA 94550

FWP/OTIS Number: M1ID156-HA, EEW34126, ED1805000

Subcontractors: University of Alabama Birmingham

Other Partners: Gallo Glass Company, 605 South Santa Cruz Avenue, Modesto, CA 95354

Contacts: Linda G. Blevins
Phone: 925-294-4811
E-mail: lgblevi@sandia.gov

Project Team: DOE-HQ Contacts: Elliott Levine

Industry Contact: John Neufeld
Gallo Glass Company, Modesto, CA 95354

Project Objectives: The objectives of the project are: (1) reduction of particulate matter emissions, (2) increase in length of furnace campaigns, and (3) improvement of melting efficiency, through simultaneous minimization of batch dust carryover, minimization of alkali volatilization, and optimization of oxygen-to-fuel ratio during glass melting and fining using wide flame oxy-fuel burners. The anticipated improvements in performance are to be achieved by reduction of alkali and particulate at its sources, reduction of unburned combustibles and waste heat losses, maximization of flame radiation through intelligent control of melting furnace conditions, and optimization of batch composition.

Background: Entrainment of batch particles in flue gas and vaporization of the alkali metals, sodium and potassium, from melting batch and molten glass are associated with a number of negative impacts on the glass melting process and melting tank performance. Among the negative effects are: (1) corrosion of superstructure and crown refractories, (2) plugging of regenerator checkers, (3) fouling and corrosion of flue ducts, (4) particulate matter emissions, and (5) loss of raw materials. The relative importance of these effects depends upon the type of glass being melted, the design and materials of construction of the furnace, and local emissions regulations. The causes of batch particle entrainment and alkali volatilization are, for the most part, well understood. However, alteration of batch composition and furnace conditions to minimize entrainment and volatilization may have negative impact on other aspects of furnace operation and glass quality. For example, volatilization could be reduced by distributing heat input so as to make the peak glass surface temperature lower and the distribution of surface temperatures more uniform, but this would suppress glass circulation in the melt and result in

poorer glass quality at a given pull rate. As another example, batch dusting could be reduced by minimizing heat input and gas velocity over the batch blanket, but the shift of fuel heat input away from the batch blanket toward the fining zone might increase batch coverage, result in poorer overall transfer of heat to the load, and would likely increase the glass surface temperature in the fining zone, leading to increased alkali volatilization and seeds in the product. Intelligent optimization of these conflicting requirements is the subject of the project. The great variability of the rates of refractory corrosion, particulate emissions, and heat requirements from furnace to furnace and the excellent performance of some furnaces suggest that an optimum set of furnace conditions exists and that significant reductions in emission and corrosion rates and improvements in the efficiencies of poorly performing furnaces are possible.

The method being used to measure carryover and volatilization is laser-induced breakdown spectroscopy (LIBS), a continuous monitoring technique for metals demonstrated in previous trials at Gallo Glass. By observing the correlation of metals concentrations with operating conditions over long periods, the batch properties and furnace conditions associated with batch carryover and alkali volatilization will be identified. Because the oxygen-to-fuel ratio is expected to be among the critical process variables, the work also includes simultaneous measurements of furnace efficiency, so that this measure of performance can be incorporated in the furnace optimization scheme.

The work has been greatly facilitated by the sooner-than-expected arrival on the market of echelle grating spectrometers, capable of recording signals from all of the elements in the LIBS spark simultaneously, permitting the identification of individual particle types and their sources or mechanisms of formation. The echelle grating instrument, originally planned for application to the problem in March 2003, was incorporated in the LIBS system during the first 5 months of the project and has been used in two sets of field trials at Gallo Glass. Though the echelle spectrometer has provided very useful data, it has not performed as well as expected. In the first round of measurements, in December 2001, the spectrometer was found not to have sufficient sensitivity for determination of element concentrations in individual laser sparks. This would preclude the determination of joint particle size-composition distributions. However, the apparent size distributions of individual elements can still be determined using the original Czerny-Turner spectrometer, so relatively infrequent large particles carried over from batch can be distinguished from the more uniform concentration of submicrometer particles formed from volatile species. During the most recent field test, in June 2002, both the echelle and conventional grating spectrometers were run side-by-side, for direct comparison of their performance.

Status: Extended measurement campaigns were conducted in May 2003, June 2002, and December 2001. Analysis of the data from the first and second campaigns is complete. Analysis of the data from the third campaign is mostly complete, but a few tasks remain. This quarter, we have continued data analysis from May 2003 and begun planning our final field test at Gallo. The final field test will be held June 2-11, 2004.

<u>May 2003</u>: Measurements were performed in the vertical flue just downstream from the furnace exit on Tank #1. Flue gas temperature and concentrations of O_2, CO, NO, and SO_2 were recorded simultaneously with LIBS signals for multiple elements. Gallo Glass systematically varied oxygen-to-gas ratio while tests were being performed.

As the average oxygen-to-gas ratio increased from 1.98 to 2.18, average O_2 concentration increased, average NO concentration increased, and average SO_2 concentration decreased or remained constant. For the lowest oxygen-to-gas ratios (1.98 to 2.04), CO occasionally

appeared in the exhaust.

Hourly ambient temperature data were obtained from the National Weather Service. The actual O/G in the furnace appeared to change as a function of ambient temperature—reaching a minimum when ambient temperature was maximum in the late afternoon. The most likely cause was a temperature-dependent change in the amount of air leaking into the furnace. This may happen because of air entrainment into the cooling wind or through the burner blocks. Offline discussions at the glass review meeting revealed that this trend has been observed by other manufacturers operating in the California Central Valley, where the difference between the maximum and minimum daily temperatures is large. Interestingly, bridge wall temperature appears to vary directly with ambient temperature, while melter bottom throat temperature varies inversely with ambient temperature.

LIBS signals were collected as two-minute averages with the echelle detection system and as single-shot measurements every 200 ms with the Czerny-Turner detection system. The echelle system detected elemental emission between 250 nm and 900 nm simultaneously. The elements targeted during echelle data reduction were sodium at 589.0 nm and 589.6 nm, potassium at 766.5 nm and 769.9 nm, and calcium at 393.4 nm and 396.8 nm. The Czerny-Turner detection system was tuned to four different spectral windows, with measurements being made in each window for two hours apiece. The windows corresponded to the spectral detection regions for silicon and magnesium (258 nm – 293 nm), potassium (731 nm to 766 nm), sodium (571 nm t0 606 nm), and calcium and aluminum (386 nm – 421 nm).

When products of fuel-rich combustion appeared in the furnace, SO_2 concentration increased dramatically. Interestingly, sodium and potassium LIBS signals from both detection systems decreased dramatically as well. Calcium LIBS signals remained constant in the presence of rich products. This is surprising, since the presence of CO is expected to increase alkali volatilization. A plausible explanation was found for the decrease of sodium and potassium signals for fuel-rich conditions. The LIBS signal is probably absorbed by alkali atoms in the combustion products. Equilibrium calculations demonstrate that alkali metal atoms become more prevalent than molecular forms for rich conditions but not for lean conditions. Laboratory experiments employing sodium addition to the products of a well-controlled burner verify that, for a constant sodium concentration, temperature, and background gas composition, LIBS signals are dramatically reduced for rich conditions relative to lean conditions. Changes in line shape resolution also provide some clues that self-absorption of the light by sodium atoms is occurring for rich conditions.

To address this issue, we analyzed newly selected spectral lines that terminate in an energy level higher than the ground state energy level for each atom; emission from these lines should not be absorbed by the ground-state sodium and potassium atoms present during rich conditions. Sodium lines matching this criterion were found at 818.3 nm and 819.5 nm. Potassium line pairs at 578.2/580.2 nm and 691.1/693.9 nm also satisfied the requirement. We analyzed these lines in our spectra—one advantage of using a broadband analyzer like the echelle spectrometer was realized because the entire spectrum between 300 nm and 900 nm was available from the tests. The signals from the new sodium lines were strong enough for analysis, but the signals from the new potassium lines did not have adequate signal-to-noise ratios for analysis. However, by chemical analogy, it is reasonable to assume that the potassium signals will track the sodium signals. The new sodium signals proved to be less susceptible to the sodium atom absorption. The new lines decreased in intensity as the concentrations of fuel-rich combustion products increased, but the trend was less dramatic than that for the previous lines. The 819 nm light was attenuated presumably because a certain

fraction of the sodium atoms in the furnace were in an excited state owing to absorption of 589 nm light and thus were available to absorb 819 nm light. Absorption calculations are underway to explain the relative trends. The effects of line broadening in a high temperature carbon dioxide/water environment are being accounted for in the calculations.

For lean conditions, the 819 nm sodium lines decrease in intensity with increasing oxygen concentration, showing a 20% decrease from 2.6% oxygen to 8.3% oxygen. The 589 nm sodium line showed a 1% decrease for the same change in oxygen concentration. Thus, the 819 nm trend for lean conditions is stronger than that of the 589 nm line. This is surprising since there is no reason to believe that the two sets of atomic lines should behave differently for lean conditions. Analysis of this trend is currently underway.

Single-shot measurements of calcium show a baseline amount of calcium present due to volatilization as well as the occasional large signal that indicates the presence of batch particles in the LIBS probe volume. Silicon, aluminum, and magnesium did not show significant baseline amounts, but batch particles containing these elements were seen passing through the measurement location from time to time. The frequency of calcium batch particles was 5713 hits out of 581,580 shots; magnesium batch particles were found in 466 of 662,580 shots; silicon batch particles were found in 399 of 662,580 shots; aluminum batch particles were found in 213 of 581,580 shots. Calcium-containing batch particles originating from limestone in the batch were the most abundant of the four types of batch particles detected. Silicon particles originated from sand in the batch. Magnesium and aluminum particles originated from additives or contaminants in the batch. Additional batch particles may have originated from the recycled glass added to the batch. To our knowledge, this is the first time that batch particles have been detected in real time in the flue of a glass furnace.

Based on the single-shot results, batch particle size distributions were computed. Calculations were performed assuming spherical particles with predefined compositions containing only one type of targeted element per particle. The particles were assumed to be calcium oxide, magnesium oxide, silicon dioxide, and aluminum oxide. In the calculated number distributions, particles with sizes of abut 0.5 μm are most abundant for magnesium oxide and calcium oxide. For silicon dioxide and aluminum oxide, 1 μm to 2 μm particles are most abundant. Sharp decreases in furnace pressure were found to correlate with rapid increases in batch particle carryover. The occurrence of batch particles of any kind—expressed in particles per ten minute period—increases when a change in furnace operating condition occurs. Difficulties were encountered with determining the presence of batch particles for the alkali metals because they have high background concentrations in the furnace. Artifacts associated with the first shot of each series of shots were identified and linked to the necessary operation of the intensified camera in “shutter pre-open” mode.

During the second quarter of FY2004, we have continued to work on calibration issues for sodium and potassium. Typical off-the-shelf calibration mixtures result in alkali concentrations in the calibration rig lower than the ~200 pm expected in the field. Hence, self-prepared mixtures containing high concentrations of sodium and potassium were used for the calibrations. However, the concentrations determined from the calibrations were too large. Reasons are presently being explored. The atomization process in the calibration rig is being examined. Calculations are being performed to predict the effect of self absorption both in the pathway and in the spark on the alkali calibration curves.

A set of laboratory experiments currently underway aims to resolve the effect of temperature, background gas makeup, and particle loading on the calibration curves. A well controlled

burner is being used to generate combustion product mixtures and temperatures characteristic of glass furnaces. Additionally, we have assembled an on-the-fly laser power meter so that we can continuously monitor laser output power in the field.

We analyzed nitrogen atom signals from the Mechelle spectrometer to see if we could (a) calibrate them for molecular nitrogen concentration and (b) use them to calculate the air inleakage rates. Calibration was performed with mixtures of nitrogen in helium. Initial testing showed that the nitrogen signals from the field were orders of magnitude different from nitrogen signals from the laboratory obtained with mixtures that contained the concentrations expected for reasonable air inleakage rates into the furnace. Further work is underway on this topic. A gas chromatograph will be used during the next field tests to measure the molecular nitrogen concentration in the furnace. This measurement should provide information on the rate of air inleakage.

An energy balance on the furnace for the May 2003 tests has been completed. For the analysis, all of the energy inputs and outputs were expressed in units of energy per unit mass of glass pulled from the furnace. Energy inputs (fuel and electric boost) were obtained for the entire May 2003 test from plant control room records. The solid feed to the melter was assumed to contain raw materials, cullet, and moisture. The gases exiting the furnace were considered to contain batch gases, combustion products (carbon dioxide, water, and the small amount of nitrogen present in natural gas), excess oxygen, combustibles (primarily carbon monoxide, with little unburned hydrocarbons and soot), and air in-leakage. Appropriate temperatures from the control room records and from our own thermocouple measurements were used in the analysis. An optimum value of furnace excess oxygen concentration that minimizes energy loss in the flue gas while avoiding CO production was identified.

The largest fraction of the energy required for batch reactions and melting goes into heating the glass. Because the temperature at the throat is a set point, there is only slight variation in the sensible energy content of the glass, even with change in pull. The energy required for the batch reactions, per unit mass of glass, is completely unaffected by any of the conditions in the furnace. In contrast, the enthalpy of the batch gases depends upon the furnace exit gas temperature, but the temperature is only subject to relatively small fluctuations. The total energy required for melting is close to 50% of the total energy input at the pull rate of 322 ton/day. Calculation of furnace efficiency is not possible because the air inleakage rate is not known. Plans are in place to measure the inleakage rate during the June 2004 tests.

A plan was developed for the June 2004 tests. Our objectives are to (1) determine air inleakage rates, (2) further examine the effects of furnace stoichiometry on alkali volatilization, and (3) further examine the effects of furnace conditions on batch particles. Several improvements have been made to our instrumentation, and these will be tested in the field. New fiber bundles, laser power meter optics, and other improvements will be implemented for the first time. Air inleakage rates will be examined using a gas chromatograph for nitrogen concentration, an anemometer for leak velocity, and/or the nitrogen signals from LIBS for nitrogen quantification. Cooling wind fans will be adjusted to elucidate air leak behavior. The effects of furnace stoichiometry will be ascertained by making measurements at a cooler location or by analyzing a conditioned slip stream from the furnace. Lower temperatures should avoid alkali atom interference in the measurement. Only silicon batch particles will be examined, and changes will be made to maximize the particle hit rate.

June 2002: Flue gas temperature and concentrations of O_2, CO, NO, and SO_2 were recorded synchronously with sodium, potassium, calcium, and aluminum LIBS signals. Measurements

were performed in the vertical flue. Both Czerny-Turner and echelle spectrometers were used with the LIBS system. Natural gas and oxygen input flows for the furnace were captured in strip charts from Gallo Glass. Other operating data such as furnace pressure, glass level, electric boost amount, and radiometric wall temperatures were also obtained from Gallo Glass. Plots of these variables as a function of time were digitized from the Gallo strip charts. Their values were interpolated so that the data points corresponded to the times associated with the LIBS measurements. Mathematical cross-correlations were performed.

For the June 2002 data, sodium and potassium concentrations in the flue were found to mathematically correlate with the north and south breast wall temperatures. Additionally, there were correlations of alkali concentrations with exhaust oxygen concentration and with exhaust sulfur dioxide concentration for some days but not for all days. Two different glass pull rates were examined (336 and 435 tons/day), so trends were established for different furnace loads. The oxygen to gas ratio was consistently 2.12. Alkali concentrations showed a stronger dependence on temperature than on stoichiometry. There is some evidence that the relationship between alkali release and furnace stoichiometry is temperature dependent.

A significant level of potassium was observed in the flue gas in June 2002. The combination of potassium with sodium is expected to be a more aggressive agent for corrosion of silica refractory than sodium alone. The high measured amount of potassium is inconsistent with the chemical analysis of dust collected at the exit of the electrostatic precipitator (ESP) and with the parent glass chemistry. Since the ESP processes the exhaust of four separate furnaces, the dust chemistry may not be consistent with that of any individual furnace. Enrichment of potassium relative to sodium in the exhaust of glass furnaces and other combustion devices such as biomass boilers has been observed previously. To examine this trend further, we collected alkali particles near the LIBS sampling point using an extractive probe and aqueous bath during May 2003 testing.

The June 2002 data hint that an optimum furnace stoichiometry will minimize alkali concentration and avoid carbon monoxide emission. Sulfur dioxide and nitric oxide emissions are relatively insensitive to stoichiometry except under reducing conditions. Calcium and aluminum were also observed in the flue, but at much lower concentrations than sodium and potassium.

The apparent particle size distribution for sodium determined from the June 2002 LIBS data is narrow and centered about a large particle size (several microns). This suggests a high number density of fine particles or a fume and a few large particles originating from volatilization rather than carryover.

<u>December 2001</u>: LIBS measurements of sodium, potassium, calcium, magnesium, aluminum, boron, and silicon were performed using the echelle spectrometer in the furnace exhaust duct upstream of the electrostatic precipitator. At this location, the exhaust is diluted by a factor of about 3.5:1. Simultaneously, O_2, CO, NO, and SO_2 concentrations were recorded. Natural gas rate of flow, oxygen rate of flow, furnace pressure, glass level, electric boost amount, and radiometric process temperatures were captured in strip charts from Gallo Glass. The pull rate was about 430 tons/day, and the oxygen to gas ratio was about 2.16.

The potassium and sodium concentrations correlated with each other. Additionally, the calcium, magnesium, and aluminum concentrations correlated with each other. However, the potassium and sodium concentrations did not correlate with the calcium, magnesium, or aluminum concentrations. This suggests two different release processes. One is related to the alkali

metals and the other is related to the more refractory calcium, magnesium, and aluminum. The alkali metal concentrations showed a mild correlations with furnace breast wall temperatures.

In the December 2001 measurements, flue gas composition showed cyclic variations on two time scales, one of about 12 minutes, and the other of about 1½ hours. The longer scale corresponds to the control room record of gas and oxygen flow rates; the 12-minute cycle is correlated with furnace pressure. The cycles in the sodium and potassium concentrations correspond very roughly to the cycles in gas and oxygen flows (high heat input corresponds to high sodium and potassium), but the correspondence is by no means perfect. During ceramic welding in December 2001, the aluminum concentration in the flue increased and silicon was also observed.

The indicated sodium concentration in the flue was higher during December 2001 than during the 1998 tests conducted in collaboration with Corning, Gallo Glass, OIT, and Visteon. The Czerny-Turner spectrometer used in 1998 was brought back for comparison with the new echelle spectrometer during the June 2002 tests. The sodium concentration was lower during June 2002 than during December 2001. The reasons for the discrepancy in alkali concentrations are being examined.

A model for crown corrosion by sodium was developed and the values of its parameters determined from measurements during the first oxygen/gas furnace campaign on Tank No. 1 at Gallo Glass. The model provides a rational basis for assessment of the costs and benefits, with respect to refractory corrosion, from changes in operating conditions that influence sodium volatilization. An interesting prediction of the model is that when sodium reaches two or three hundred parts-per-million in the combustion space, increasing the crown temperature increases, rather than decreases, the silica corrosion rate.

Changes that will improve signal-to-noise ratio have been made to the LIBS instrument and will be deployed in the next test. These improvements will hopefully allow us to measure the concentration of a larger number of elements simultaneously. Additionally, we should be able to measure the important elements more accurately. An optimum set of LIBS instrument settings has been systematically found for the next test. Some of the parameters examined were saturation behavior, on-camera and off-camera averaging, binning selections, calibration curve linearity, time constant determination, purge flow settings, optimum delay and gate times, laser power consistency, and differences between the Czerny-Turner and echelle spectrometers. Computational fluid dynamic modeling of the interaction of the LIBS purge flow with the furnace cross flow has been undertaken.

Linda G. Blevins of Sandia is leading the project. Peter Walsh of the University of Alabama Birmingham is a consultant. Shane Sickafoose, Doug Scott, and Alejandro Molina of Sandia are the current project participants.

Plans for Next Quarter: Data reduction for the May 2003 field test will be completed during the next quarter. Calibration issues will be resolved. The next field test is to be held June 2-11, 2004.

Patents: none

Publications/Presentations:

Blevins, L.G., Molina, A., Scott, D.D., Sickafoose, S.M., Neufeld, J.W., Walsh, P.M., "Effect of Variations in Oxygen to Gas Ratio on Flue Gas Composition, Process Temperature and Alkali Metal Concentration in an Oxygen/Natural Gas Glass Melting Furnace," Fall Technical Meeting, Western States Section of The Combustion Institute, Los Angeles, California, October 2003.

Blevins, L.G., Molina, A., Sickafoose, S.M., Scott, D.D., Walsh, P.M., and Neufeld, J., "Monitoring and Control of Alkali Volatilization and Batch Carryover for Minimization of Particulate Emissions and Crown Refractory Corrosion in Glass Melting Furnaces," DOE Glass Industry Project Review, Golden, CO, September 2003.

Blevins, L.G., Shaddix, C.R., Sickafoose, S.M., and Walsh, P.M., "Laser-Induced Breakdown Spectroscopy in High-Temperature Industrial Boilers and Furnaces," *Applied Optics*, V. 42, pp. 6107-6118, 2003. (Results featured on the cover of the journal.)

Walsh, P.M., Blevins, L.G., Sickafoose, S.M., Johnsen, H.A., Molina, A., Ottesen, D.K., Scott, D.D., Steinhaus, R.J., Christy, R.H., and Neufeld, J.W., "Laser-Induced Breakdown Spectrometry: Application to Measurement of Inorganic Particulate Emissions from Combustion in Engines and Furnaces," Third Mediterranean Combustion Symposium, Marrakech, Morocco, June 8-13, 2003.

Walsh, P., Allendorf, M. Nilson, R., Griffiths, S., Blevins, L., Sickafoose, S., Johnsen, H., Molina, A., Scott, D., Moore, D., Neufeld, J., Lemings, L., Brown, J., Wu, K.T., "Sodium Volatilization and Silica Refractory Corrosion in an Oxygen/Natural-Gas-Fired Container Glass Furnace," Hotbels Seminar, Lexington, KY, April 2003.

Blevins, L.G., Molina, A., Sickafoose, S.M., Walsh, P.M., and Neufeld, J.W., "Alkali Metal Concentrations in an Oxy-Fuel Glass Furnace Exhaust," presented at the 3rd Joint US Meeting of the Combustion Institute, Chicago, Illinois, March 2003.

Walsh, P.M., Sickafoose, S.M., Scott, D.D., Steinhaus, R., Johnsen, H.A., and Neufeld, J., "Monitoring and Control of Alkali Volatilization and Batch Carryover for Minimization of Particulate Emissions and Crown Refractory Corrosion in Glass Melting Furnaces" DOE Glass Industry Project Review, Livermore, CA, September 10, 2002.

Milestone Status Table:

ID Number	Task / Milestone Description	Planned Completion	Actual Completion	Comments
1	Data acquisition system	7/31/01	6/20/02	*
2	CO and O_2 monitors	9/30/01	12/14/01	
3	Furnace exit gas temperature	10/31/01	6/20/02	
4	Flame and refractory radiation	11/30/01	6/20/02	
5	Synchronized records	12/31/01	6/20/02	*
6	Measurements of sodium	2/28/02	12/14/01	
7	Sources of sodium	3/31/02	9/30/02	
8	Conditions influencing sodium	4/30/02	9/30/02	
9	Maximum furnace efficiency	5/31/02	1/30/04	
10	Measurements of silicon	7/31/02	12/14/01	
11	Measurements of calcium	9/30/02	12/14/01	
12	Correlations for metals	11/30/02	01/15/03	

ID Number	Task / Milestone Description	Planned Completion	Actual Completion	Comments
13	Broad-band LIBS instrument	3/31/03	10/31/01	
14	Software for LIBS instrument	5/31/03	10/31/01	
15	Simultaneous measurements of Na, K, Ca, and Si	7/31/03	12/14/01	
16	Relationship between Na and K	8/31/03	02/01/03	
17	Optimum stoichiometry	9/30/03	09/30/03	
18	Sodium and calcium monitor	1/31/04		
19	Control strategy	3/31/04		
20	Demo in melting research facility	4/30/04		
21	Method for monitoring and control of volatilization and carryover	5/31/04		

*It has not been possible to collect data from the control room in real time; printouts of the data acquisition system records of furnace conditions are used instead. The furnace radiation, exit gas temperature, and flue gas composition data are, however, synchronized with LIBS.

Budget Data (as of March 31, 2004)**:**

			Approved Spending Plan ($000)			Actual Spent to Date ($000)		
Phase / Budget Period			DOE Amount	Cost Share	Total	DOE Amount	Cost Share	Total
	From	To						
Year 1	6/01	5/02	350	350	700	350	350*	700
Year 2	6/02	5/03	350	350	700	350	350*	700
Year 3	6/03	5/04	350	350	700	250	250*	500
Totals			1,050	1,050	2,100	950	950*	1,900

*Sandia National Laboratories' estimate.

Development of Process Optimization Strategies, Models, and Chemical Databases for On-Line Coating of Flat Glass

Allendorf: Sandia National Laboratories

CPS#01640

Quarterly Report

Title:	Development of Process Optimization Strategies, Models, and Chemical Databases for On-Line Coating of Float Glass
Covering Period:	January 1, 2004 – March 31, 2004
Date:	May 3, 2004
Laboratory:	Sandia National Laboratories 7011 East Avenue Livermore, CA 94551-0969
B&R No. **FWP/OTIS:**	820101000
Subcontractors:	None
Industrial partner:	PPG Industries
Contact:	Mark D. Allendorf (925)294-2895 mdallen@sandia.gov
Project Team:	James McCamy Glass Technology Research Center P.O. Box 11472 Pittsburgh, PA 15238-0472 (412)820-8790 jmccamy@ppg.com

Project Objectives

This project addresses the need to improve the efficiency of on-line atmospheric pressure chemical vapor deposition (APCVD) processes used primarily to deposit coatings on float glass, but also on glass containers. APCVD processes in the flat-glass industry at present can be as little as 10% efficient (i.e., only 10% of the incoming precursor chemicals are converted to coating), resulting in annual production and waste-treatment disposal costs to the industry of nearly $23 million. In addition, remelting of glass due to defects in the coatings results in over 1.1×10^{11} Btu/year of unproductive energy usage.

The objectives of this proposal are as follows:

1. Identify modifications to existing APCVD coater designs and/or new coater designs that will double the efficiency of reactant utilization, thereby substantially reducing waste emissions and purchases of raw materials.

2. Develop validated computational models to predict defects due to thickness nonuniformity and haze; use these to reduce defect frequency and improve the overall energy efficiency of the process by reducing the amount of rejected glass that must be remelted.
3. Generate a database of fundamental thermodynamic and kinetic information for APCVD.
4. Provide enhanced understanding of the underlying chemical reactions that control APCVD, which will enable the development of improved process models and control strategies for float-glass coating and other types of glass, such as containers, that use APCVD coatings.

Background

The use of on-line atmospheric pressure chemical vapor deposition (APCVD) techniques to manufacture coatings on glass is a critical technology in the flat-glass industry, responsible for the production of approximately 110 million ft^2/year of highly value-added products. These consist primarily of low-emissivity ("low-E") and solar-control glasses for architectural applications, but also include coatings for solar cells, computer screens, automotive applications, and xerography. The markets for these products are strong and growing. Coated glass for energy-conserving windows constitutes a roughly $600 million market for the raw glass alone; the total value of the final manufactured product (primarily dual-pane glass units) is in the billions of dollars. APCVD is a virtual necessity for maximizing coating production rates, since it can be performed at atmospheric pressure and can deposit material at rates fast enough to be compatible with glass ribbons speeds on typical float lines (about 1 ft/s). APCVD is thus an economically attractive, but technologically very challenging, manufacturing process.

Status

Project management activities

- This project reached the end of its official term in February 2004. However, a small amount of funding remains (see table below) that will be used to complete remaining items and generate a final report.

- Dr. Jim McCamy is the new PPG principal investigator since Jill Troup is on medical leave. Communication between Sandia and PPG continues on a regular basis through phone conversations and email exchange of data.

Task 1 Deposition mechanisms

- The effect of additives on the tin oxide growth rate was briefly explored, with the intent of providing additional support for efforts in this area that will be supported by anticipated additional DOE/ITP funding. We find that as substrate temperature increases, the MBTC conversion efficiency by using additive A. An increase of 22 % at 600°C is observed for the deposition from MBTC+O_2 mixtures. The growth rate is increased by 35.3% at 600 °C over growth without compound A. The activation energy also decreases. Additional work is required, however to accurately establish the concentration of A iin the reactor and determine the best mode for its storage and delivery.

- Two mechanisms that can predict tin oxide growth rates in Sandia's stagnation flow reactor (SFR) were delivered to PPG for use by them in modeling their full-scale coating unit.

- Last quarter we determined that the growth rate predicted CFD simulations in the PPG pilot-scale reactor was too high, although the shape of the deposition profile was in excellent agreement with experiment. Additional discussions with PPG concerning the potential for uncertainties in reactor operating conditions and a thorough examination of the laboratory data used to develop the models turned up nothing that can account for the magnitude of the discrepancy. One possibility we are currently investigating is homogeneous nucleation of particles in the reactor, which could substantially decrease the MBTC concentration (and thus the measured growth rate). This phenomenon would not be evident in the final product, since thermal diffusion would blow the particles away from the surface.

- To determine whether our models of tin oxide CVD can be extended to higher MBTC concentrations than those used in the SFR experiments, we compared predictions of our gas+surface deposition mechanism with new experimental data obtained at a total pressure of 65 torr. The partial pressures of MBTC were 0.62 and 1.1 torr, which is 44 times higher concentration than our standard concentration of MBTC. When the growth rate is first order in MBTC, the simulated growth rate is lower by 35% than experimental data at 0.62Torr. However, when the reaction order is decreased to 0.72, the simulated growth rate is in good agreement with the data. Growth rates simulated using $[MBTC]^{0.72}$ at other conditions are also in good agreement with the data. This means that our reaction model can be used at MBTC concentrations that are more typical of on-line tin oxide deposition processes. However, the simulated growths rate are somewhat higher than those obtained in experiments at PPG in their pilot-scale reactor.

- To check for the applicability of our deposition models to atmospheric pressure conditions, we modeled two sets of deposition data obtained at 1 atm: 1) data obtained in a continuously stirred tank reactor (CSTR; 1.52% MBTC+20% O_2+2%H_2O) as part of the project and 2) data of Lee et al. (1.0%MBTC+0.1-5%H_2O+20%O_2) that are in the literature. The simulated growth rates from two reaction models (surface only and surface + gas reaction) are higher by a factor of 5 than the CSTR data. On the other hand, growth rates predicted for Lee's conditions using the surface+gas-phase reaction model are in very good agreement with the experimental data. We are discussing possible reasons for the discrepancy with the CSTR data with Dr. Ton van Mol at TNO, who obtained the data. A repeat of some of the experiments is being considered.

- We reported previously that there is no incubation time for deposition of tin oxide films from MBTC+O_2 mixtures. This quarter we performed experiments to determine whether an incubation time exists for MBTC+O_2+H_2O mixtures. Experiments show that no incubation time was exists; film thickness is proportional to the deposition time.

- A paper briefly summarizing recent Sandia modeling efforts was prepared for the upcoming 5th Int. Conference on Coatings on Glass. M. Allendorf is coauthor of this keynote presentation, which will be presented by Dr. Ton van Mol of TNO at the meeting in Germany. The paper is currently in review and will be submitted next quarter.

Task 2 Gas-phase and surface chemistry measurements

- Results of quantum-chemistry calculations to predict the thermodynamic properties of MBTC-H_2O complexes completed last quarter were analyzed. These computations show that water can react exothermically with MBTC to form a complex in the gas phase:

  $C_4H_9SnCl_3 + 2H_2O \leftrightarrow C_4H_9SnCl_3(H_2O)_2$ $\Delta H°(298\ K) = -62.4\ kJ\ mol^{-1}$ (1)

  However, subsequent decomposition of this complex is endothermic:

  $C_4H_9SnCl_3(H_2O)_2 \leftrightarrow C_4H_9SnCl(OH)_2 + 2HCl$ $\Delta H°(298\ K) = 129.6\ kJ\ mol^{-1}$ (2)

  The thermodynamics for the two processes indicate that complex formation could occur, but further reaction leading to the formation of hydroxy-tin compounds is less likely. Although the enthalpy of Reaction (2) is considerably smaller than the thermal energy required to break the Sn–C bond in MBTC, non-zero activation energies are expected for the individual HCl elimination steps that could significantly increase the temperature at which these reactions occur. Furthermore, since the addition of an H_2O molecule to form a complex with MBTC will proceed without a significant energy barrier, supplying thermal energy sufficient to drive the HCl elimination reactions will also cause the complex to dissociate (Reaction -1). Thus, if the accelerating effect of water on the growth process results from gas-phase reactions, it is probably due to formation of reactive tin-water complexes by chemistry such as that in Reaction (1).

Task 3 On-line monitoring

- Task complete.

Task 4 Computational fluid dynamic modeling

- A reacting-flow model of the Sandia SFR experiment was developed using the Sandia computation fluid mechanics code Current. The purpose of this work was compare predictions of the CFD code Current with the SPIN model used to develop the growth-rate mechanisms. If results of these two codes are in agreement, then the growth-rate discrepancy discussed above in Task 1 cannot be attributed to an error in the CFD code. Current is the same code that was used to perform reacting flow simulations of the PPG pilot coater. The Sandia reacting stagnation flow code, SPIN, has been extensively tested as a tool for developing chemical mechanisms based on MBTC deposition from the stagnation flow reactor and its accuracy is well established. We find that tin oxide deposition rates predicted by the two codes are in excellent agreement for the same operating conditions at a substrate temperature of 673K, lending confidence to the accuracy of the CFD predictions.

Task 5 Deposition experiments

- Additional growth rate experiments were conducted in the SFR to determine the effects of pressure, MBTC concentration, and incubation time. See discussion above in Task 1.

Task 6 Process optimization

- Results of earlier field trials, using the two process-optimization strategies suggested by SNL, indicated that it should be feasible to double the efficiency of MBTC use. However, a key issue with coatings on glass is the durability of the coating (as defined by long-term adhesion under accelerated testing). A set of experiments examining the effect of coater geometry changes and water concentration on MBTC efficiency and durability were conducted at PPG's full-scale manufacturing facility in Mt. Zion, Illinois during January. Preliminary results showed no significant difference in the durability of coatings deposited under high efficiency conditions as compared with those produced under standard processing conditions. Additional full-scale plant trials are planned for next quarter to further validate this approach for different production rates and glass thicknesses.

Plans for next quarter

- Complete low-MBTC-concentration CFD calculations to assess the effect of precursor concentration reduction (as might occur by particle nucleation) on maximum growth rate and growth-rate profile.

- Complete draft of final report.

Patents None this quarter.

Publications/Presentations

A.M.B. van Mol, Y. Chae, A. H. McDaniel, and M.D. Allendorf "Chemical Vapour deposition of Tin Oxide: Fundamentals and Applications," submitted to *Thin Sol. Films*, April 2004.

Milestone Status Table (dates in project months):

Task	Task/Milestone Description	Completion Date		Comments
		Planned	Actual	
1.1	Develop thermodynamic data base	9	12	
1.2	Gas-phase model development	24	30	
1.3	Surface model development	24	35	
1.4	Mechanism testing/validation	24	35	
1.5	Chlorine defect model	24	N/A	See note 4 below
2.1	Gas-phase rates	18		See note 3
2.2	Gas-phase intermediates	24	N/A	See note 2 below
3.1	Equipment modification/calibration	18	18	
3.2	On-line monitoring in PPG facility	36	30	
4.1	Non-reacting model: pilot-scale	6	6	
4.2	Reacting model: pilot scale	18	24	

4.3	Non-reacting model: full-scale	24	--	See note 1 below
4.4	Reacting model: full-scale	36	--	See note 1 below
5.1	Pilot-scale deposition experiments: Phase 1	9	15	
5.2	Pilot-scale deposition experiments: Phase 2	21	24	
5.4	SFR MBTC/O_2/H_2O deposition rates	18	24	See note 4 below
6.1	SFR tests	24	34	See note 4 below
6.2	Pilot-scale tests	27	35	
6.3	Full-scale tests	35	35	
	Final report	38		

Notes:

1. Computational fluid dynamic simulations of the full-scale coater could be more effectively done by a subcontractor to PPG, such as Fluent. SNL would provide a validated deposition model and associated gas-phase chemistry for use in such an effort. Experiments and modeling of the pilot-scale coater are deemed sufficient to test and validate process optimization strategies under most circumstances.
2. Laser-induced fluorescence measurements initially planned may not be necessary if data on MBTC product formation prove adequate for model validation.
3. Experiments to provide model validation will continue to near the end of the project. We expect to make use of the data to refine our models as much as possible, although the gas-phase model is now essentially complete.
4. The source of chlorine defects was identified and a solution found by PPG during the early stages of this project, so this task was dropped from project activities.

Budget Data (in thousands of $)**

			Approved Spending Plan			Actual Spent to Date*		
Phase/Budget Period			DOE Amount	Cost Share	Total	DOE Amount	Cost Share	Total
	From	To						
PY 1	3/01	2/02	500	500	1,000	538	408	946
Year 2	3/02	2/03	500	500	1,000	635	436	1,071
Year 3	3/03	2/04	500	500	1,000	311	642	953
		Totals	1,500	1,500	3,000	1,484	1,486	2,970

*Note: PY = project year (March – Feb), which does not coincide with the DOE fiscal year (Oct – Sept).

Index of HQ CPS and Award CID Numbers

Index of HQ CPS and Award CID Numbers

CPS#01025 7
CPS#01034 1
CPS#01608 8
CPS#01609 2
CPS#01640 9
CPS#14231 5
CPS#14232 6
CPS#14233 4
CPS#none..... 3
GO13091..... 4
GO13092..... 5
GO13093..... 6
ID14030 2
ID14315 1
ID14347 3