VALUATION OF GEOTHERMAL WELLS ON REAL PROPERTY

Prepared For:

U.S. Department of Energy
Idaho Operations Office
785 DOE Place
Idaho Falls, ID 83401

Contract No.: DE-PS07-99ID13757

Prepared By:

Kevin Rafferty, P.E.
Geo-Heat Center
Oregon Institute of Technology
Klamath Falls, OR 97601

December 2001

DISCLAIMER STATEMENT

This report was prepared with the support of the U.S. Department of Energy (DOE Grant No.: DE-PS07-99ID13757). However, any opinions, findings, conclusions, or recommendations expressed herein are those of the author(s) and do not necessarily reflect the view of DOE.

VALUATION OF GEOTHERMAL WELLS ON REAL PROPERTY

INTRODUCTION

The Geo-Heat Center is often contacted by individual property owners, real estate professionals and others for assistance in the evaluation of geothermal resources in real property transactions. This document is a summary of information on the methods we have suggested to approach this situation in the past. The first of these methods is employed in situations in which the geothermal resource is in use serving some application. The second approach is for situations in which there is a known well on the property but it is not currently in use. The information presented here does not address situations in which the property is underlain by suspected geothermal resources for which there is no surface manifestation or existing development.

The information contained in this document is intended to address large capacity wells of the type that would be used for commercial geothermal applications.

GEOTHERMAL HEATING SYSTEMS AND EQUIPMENT

In order to evaluate a system such as this, it is useful to have at least a fundamental understanding of heating systems and equipment. Since virtually all direct use (non electric power applications) geothermal resources produce hot water, this discussion will be confined to hot water heating systems.

In conventionally fueled heating systems, regardless of the type of process or system to which the hot water is supplied, all systems are similar in terms of the source of the heat. A device called a boiler (a somewhat misleading term since boilers in this context do not actually "boil" the water, they only raise it's temperature) adds heat to a flow of water returning from the heating system, called return water, and raises it's temperature to a higher level prior to it's delivery back to the heating system as supply water (Figure 1). A circulating pump delivers the water from the system to the boiler and back to the system in a continuous closed loop. Boilers are available in a variety of designs and for use in conjunction with different fuels and different system pressures. Fuel, in the form of oil, propane, natural gas, etc. is consumed by the burner in the boiler to produce the heat. In the process, some of the energy content of the fuel is lost (up the stack, in heat losses through the jacket of the boiler etc). These losses are expressed as a boiler efficiency. Most moderate to large boilers are able to deliver, as usable heat, about 75 to 80% of the energy content of the fuel. The remaining 20 to 25% is lost to the atmosphere and unavailable for meeting the heating needs of the building or process.

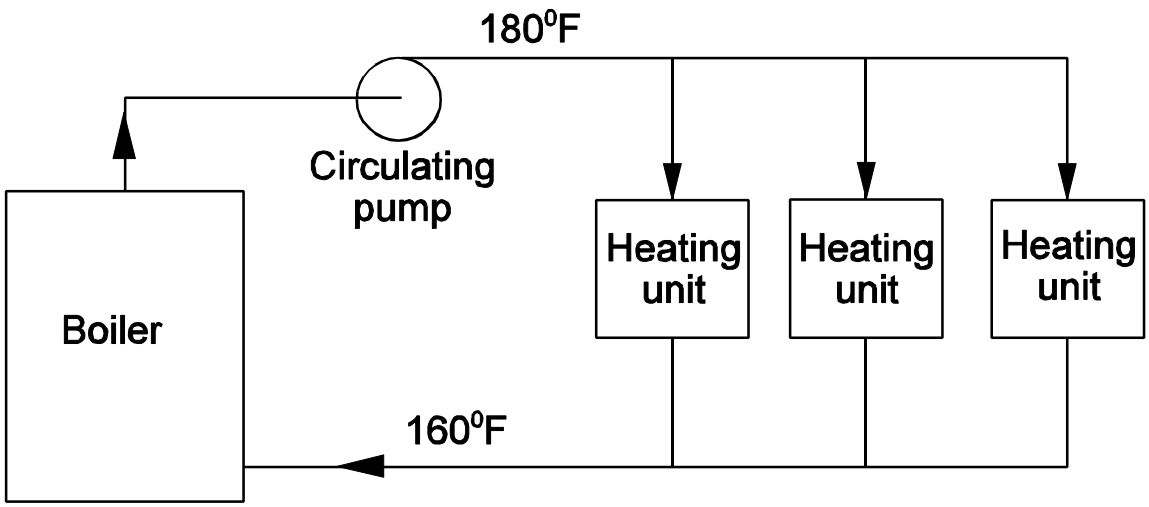

Figure 1.

When the heat is supplied to the system from a geothermal resource (Figure 2), a device called a heat exchanger replaces the boiler used in the conventional system (though sometimes a boiler is still installed in the system for back up purposes). The heat exchanger is a very simple device whose sole purpose is to allow the transfer of heat from the geothermal water, to the process water without mixing the two flows. As with boilers, there are a variety of heat exchanger types available but in geothermal applications, the plate and frame heat exchanger is the most common. In these exchangers, the geothermal and process water flow on either side of thin metal plates. Heat is transferred through the plate from one fluid to the other.

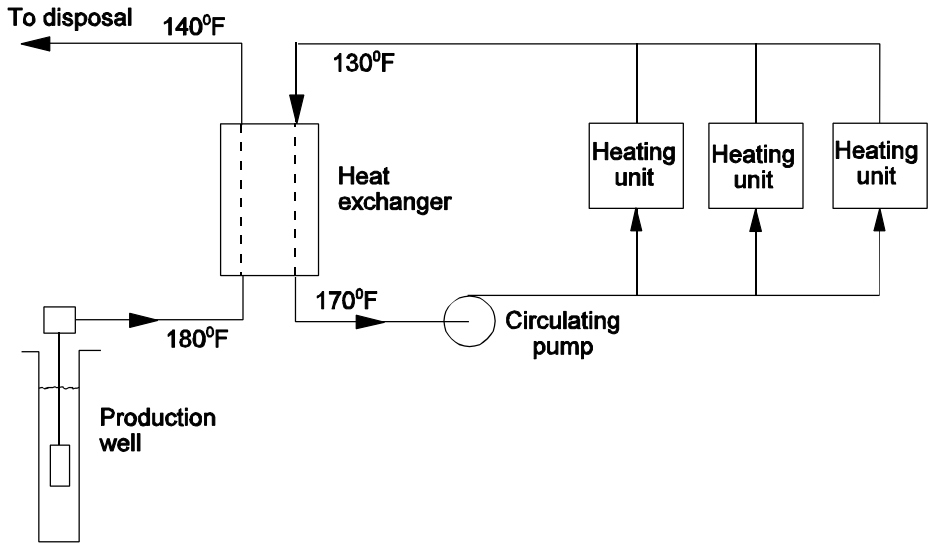

Figure 2.

In most large projects, the geothermal water is pumped from a well constructed for that purpose. A well pump driven by an electric motor delivers the water from the well through a pipeline to the heat exchanger and eventually to the disposal point. As a result, in the evaluation of the net savings that a system such as this provides, it is necessary to allow for the electrical operating costs of the well pump, maintenance of the pump and related geothermal equipment (heat exchanger, piping and fittings).

The primary value of the benefit provided by the geothermal well is a function of the net savings it provides in terms of the avoided conventional fuel cost minus the maintenance cost. A secondary benefit can also be the avoidance of the costs associated with the installation of conventional heating equipment (typically a boiler and related components). If a back-up boiler is present then this benefit is absent.

SMALL RESIDENTIAL APPLICATIONS

Small geothermal wells of the type serving the needs of a single home are relatively rare in most areas. This is primarily due to the fact that it is often uneconomical to drill a well of more than a few hundred feet to serve the domestic needs of a single home. Klamath Falls, OR is one of the few cities in the US in which there is a large number (400 to 500)of residential geothermal wells. These wells are typically in the 300 to 1000 ft depth range and are characterized by temperatures in the 150 to 200 ^{o}F range. For the most part the wells are not equipped with pumps to produce the hot water. A device known as a down hole heat exchanger is used. This is simply a loop of 2" black iron pipe submerged in the well, through which the homes heating water is circulated. A smaller diameter heat exchanger is used for heating domestic hot water.

It is common practice in the Klamath Falls area to add a premium of $10,000 to homes served by geothermal wells in the context of a real estate transaction. This figure does not distinguish between deep and shallow wells nor does it consider the temperature of the well. It is simply based on the assumption that the well is capable of meeting the space and domestic hot water heating needs of the home.

Appendix 1 includes a publication developed for first-time geothermal home owners in Klamath Falls.

WELLS CURRENTLY IN USE

Introduction

For resources which are in use, the value of the resource can be determined as a function of the benefit it provides to the operator of the application in which it is applied. This is most effectively addressed through the energy savings it produces. This approach to valuation would correspond the “Income” approach in conventional real estate appraisal. For example, if a well is producing hot

water supplied to a process, the savings in energy costs provided to the owner compared to the fuel costs for a conventional heat source would constitute the gross savings. This figure would have to be adjusted to account for the operating costs and maintenance of the geothermal system. To arrive at a useable figure for valuation purposes, the operation must be evaluated over a period of years and the net benefits brought back to present value. A spreadsheet, configured to provide these calculations is the most expedient way to address the issue.

Spreadsheet for Cost Calculation

Figure 3 is a spreadsheet for the calculation of the costs discussed above. It is capable of accounting for all of the issues discussed but does require some input values which are unfamiliar to those not accustomed to geothermal systems and life cycle cost analysis. The input discussion below provides additional information and default values for the necessary input data.

Output of the spreadsheet is a net present value of the costs associated with and the savings provided by the geothermal well.

Input Data

1. Conventional Fuel. This is the value of the annual energy savings produced by the heat supplied from the geothermal well. In operating systems this value may be available in dollars or in fuel units (gallons of fuel oil or propane, therms of gas, etc). If the data is available in fuel units it will be necessary to convert it into dollars using the local utility or fuel costs. In cases where this information is not available, the following costs can be used.

   Fuel oil - 1.00 $/gal
   Propane - 1.30 $/gal
   Nat Gas - 0.75 $/therm

   Energy content of these fuels is approximately 138,000 Btu/gal (fuel oil), 90,000 Btu/gal (propane) and 100,000 Btu/therm (nat gas). With the exception of the recent 20% to 30% increase (late 2000), natural gas has been a fairly stable fuel with respect to price. Fuel oil experiences moderate price stability with fluctuations of +/- 30% over the past few years. Propane is the most volatile in terms of price sometimes varying as much as 40% in a single year. It is important to base the fuel savings on a locally available fuel. Natural gas is often the least expensive conventional fuel but, particularly in rural areas, is not always available.

2. Conventional Fuel Inflation Rate. This is the inflation rate that the spreadsheet will use to annually increase the cost of fuel to calculate the savings over the life of the project. In the past 25 years, the average inflation in the cost of most fuels has been far less than the general inflation rate for the economy as a whole. Many state energy agencies and the U.S. Department of Energy publish inflation rates for fuels and utilities. The following values

Conventional Fuel	4367	Geo Maint	400
Conv Fuel Inf Rate	0.0367	Boiler Cost	17500
Pump Electricity	1739	Discount Rate	0.08
Interest Rate	0.07	Basic Inf Rate	0.0325
Term	20	Elec Inf Rate	0.0280
		Well Flow	0.00
Present Value	50979		

Year	1 Conv Fuel	2 Pump Elec	3 Geo Maint	4 Debt Service	5 Boiler Maint	6 Savings	7 Cumulative Savings	8 PV Savings	9 Cumlative PV Svngs
1	4367	1739	400	1652	350	4230	4230	3917	3917
2	4527	1788	413	1652	361	4340	8570	3721	7637
3	4693	1838	426	1652	373	4454	13024	3536	11173
4	4866	1889	440	1652	385	4573	17597	3362	14535
5	5044	1942	455	1652	398	4697	22294	3197	17732
6	5229	1996	469	1652	411	4826	27121	3041	20773
7	5421	2052	485	1652	424	4960	32081	2894	23667
8	5620	2110	500	1652	438	5100	37180	2755	26422
9	5827	2169	517	1652	452	5245	42425	2624	29046
10	6040	2230	533	1652	467	5396	47821	2499	31545
11	6262	2292	551	1652	482	5553	53374	2382	33927
12	6492	2356	569	1652	498	5716	59091	2270	36197
13	6730	2422	587	1652	514	5886	64977	2164	38361
14	6977	2490	606	1652	530	6063	71040	2064	40426
15	7233	2560	626	1652	548	6247	77287	1969	42395
16	7499	2631	646	1652	565	6438	83725	1879	44274
17	7774	2705	667	1652	584	6637	90362	1794	46068
18	8059	2781	689	1652	603	6844	97206	1713	47781
19	8355	2859	711	1652	622	7059	104265	1636	49416
20	8661	2939	734	1652	643	7283	111548	1563	50979

Figure 3.

are taken from the latest USDOE/Energy Information Administration "Energy Outlook 2001" report. The figures are average real (to be added to the general economic inflation rate) inflation rates for the 2000 to 2020 period. These are national figures and regional variations can occur. The negative signs indicate that the inflation expected in these fuels will be lower than the general inflation rate.

Fuel Oil	-0.4%
Propane	-1.3%
Nat gas	-0.5%
Electricity	-0.2%

These values have a substantial impact on the results of the spreadsheet calculation. Entering exaggerated values for fuel inflation results in much higher savings (and net present value).

3. Pump Electricity. This is the annual cost of the electric power required by the geothermal well pump. The figure is governed by a number of factors, principal among which are: the number of hours per year that it operates, the quantity of water (gpm) produced and the depth from which it is pumped and the local electric rate. The following table provides some default values for this input. The table contains annual electricity cost values based on the well flow rate in gpm (down the left side of the table) versus well pump hours of operation across the top of the table. Annual operating hours is often a function of the type of application the well is serving. A building space heating application may operate in the1000 to 2500 hr per year range depending on the climate, a greenhouse in the 2000 to 3500 hr per year range depending on climate and an industrial application in the 2500 to 8000 hr range depending on whether it is a one two or three shift operation. For example a well is serving a greenhouse operation in northern Nevada (cold climate) and is designed for a 200 gpm flow. The appropriate value from the table would be 3284 $/yr.

	hrs/yr					
flow	**500**	**1000**	**2000**	**3000**	**500**	**8000**
25	**68**	**137**	**274**	**410**	**68**	**1095**
50	**137**	**274**	**547**	**821**	**137**	**2189**
100	**274**	**547**	**1095**	**1642**	**274**	**4378**
200	**547**	**1095**	**2189**	**3284**	**547**	**8756**
300	**821**	**1642**	**3284**	**4925**	**821**	**13134**
400	**1095**	**2189**	**4378**	**6567**	**1095**	**17512**
500	**1368**	**2736**	**5473**	**8209**	**1368**	**21890**
750	**2052**	**4104**	**8209**	**12313**	**2052**	**32835**

Note: assumes pump wire-to-water efficiency of 60%, pump head of 250 ft and electricity cost of 0.07 $/kWh

4. Interest Rate. This is the interest rate that the spreadsheet will use to calculate the debt service costs for the conventional fuel boiler. The interest rate is used to calculate an annual loan payment that would be avoided by the use of the geothermal source (since a boiler would not be required). Current values appropriate for this would be similar to current mortgage loan rates (7% as of late 2001). The value should be entered as a decimal (7 % as 0.07).

5. Term. This is the term that is used in conjunction with the interest rate above, to calculate the annual loan payment on the boiler. A value of 15 to 20 years would be appropriate.

6. Geothermal Maintenance. This is the annual cost of the maintenance of the geothermal equipment for the system. If no information is available on the actual costs, enter the well pump rated output in gpm at input #11 (well flow) and the spreadsheet will calculate a default value for geothermal maintenance.

7. Boiler Cost. This is the installed cost of a boiler and associated components that would be required for a conventional system if the geothermal resource was not available. If a back up boiler is included in the system enter a zero for this. The following table provides some default values for boilers based on output capacity in Btu/hr.

Output	**Installed Cost**
100,000	2,500
200,000	3,800
400,000	5,700
500,000	7,000
750,000	8,700
1,000,000	10,800
2,000,000	18,000
5,000,000	48,000
10,000,000	77,000

8. Discount Rate. This is the rate that the spreadsheet uses to discount the net savings back to present value. Discount rate is normally based on the investors minimum acceptable rate of return in the case of an investment or in the absence of such information, the cost of capital for the project. In most cases for this spreadsheet. The second method would be more appropriate. A value of 8 to 10% (entered as a decimal) would be used in this case.

9. Basic Inflation Rate. This is the inflation rate for the general economy. In the past 15 years, this rate has averaged in the range of 3%. The value is used by the spreadsheet to inflate the cost of maintenance on the boiler and geothermal equipment.

10. Electricity Inflation Rate. This is the value the spreadsheet uses to inflate the pump operating cost on an annual basis. A default value can be found in the description of the Fuel inflation rate for Input #2 above. In the recent past, this value has been far less than the general economic inflation rate.

11. Well Flow - If the actual geothermal maintenance costs are not known, this input value will be used to calculate the maintenance costs associated with the well pump. Enter the value of the water flow for which the well pump is rated in gpm. The spreadsheet than uses this value to calculate a well pump annual maintenance cost. If actual geothermal maintenance costs are known enter that figure in the "Geo Maint" cell and enter a zero for this input. If a value greater than zero is entered for input #11, the spreadsheet calculations ignore the value entered at "Geo Maint."

Output

Cloumn1 - Conventional Fuel. This column takes the value entered in Input #1 and inflates it at the rate entered in Input #2. The result is the gross energy savings for the system.

Column 2 - Pump Electricity. This column takes the value entered in Input#3 and inflates it annually using the rate entered in Input#10. The result is the annual cost for electricity in a given year.

Column 3 - Geothermal Maintenance. This column takes the value entered in Input #5 (or calculated based on the Well flow values entered) and inflates it annually at the rate entered in Input #9. The result is the annual cost of maintenance for the geothermal equipment in a given year.

Column 4 - Debt Service. This column calculates the annual payment that would be made for a conventional boiler if the system was not using geothermal. The annual payment is based on the values entered for boiler cost (Input #7), Interest rate (Input #4) and loan term (Input #5).

Column 5 - Boiler Maintenance. This column calculates an annual maintenance that would be required on a conventional boiler and inflates it annually using the general inflation rate entered in input #9. If a zero value is entered for the boiler cost (as in the case of an existing back up boiler) this column will indicate zero as well.

Column 6 - Savings. This column adds the values in columns 1, 4 and 5 to arrive at a gross savings for each year. It then subtracts te costs shown in columns 2 and 3 to arrive at the indicated net savings for the year. These values are in future dollars.

Column 7 - Cumulative Savings. This column sums the individual annual savings from column 6 to show a cumulative savings (in future dollars) in each year.

Column 8 - Present Value Savings. This column calculates the present value of the annual savings appearing in column 6. The future values of column 6 are discounted to present value using the discount rate entered in Input #8.

Column 9 - Cumulative Present Value Savings. This column calculates the cumulative present value savings by summing the annual values appearing in column 8. The final value in this column is the net present value of the cost and benefits associated with using the geothermal well. This figure is transferred to the Present Value location at the top of the page.

Appendix 2 includes an example of this type of calculation and the use of the use of the spreadsheet (actually a slightly different earlier version of it) for an actual application. In this case a well located on a piece of property adjacent to a school was supplying geothermal water to the schools heating system. The property owner decided to sell the property containing the well to the school district. Several sensitivity runs were made with the spreadsheet at various inflation and discount rates to evaluate the situation.

EXISTING WELLS NOT IN USE

If a well is present on the property but not currently in use, an alternate method of valuation is necessary. In this case a determination of the cost to construct a similar well can be used as a basis for valuation. This approach would be similar to the replacement method in conventional real estate appraisal.

Geothermal Wells

Geothermal direct use wells are very similar to conventional water wells. They are constructed with the same type of equipment and cased, sized and completed in much the same way. Some states have rules specific to geothermal wells that impact the cost of construction however. This is particularly true in California where devices called "blowout preventers" are often required in drilling wells with hot water. Beyond the regulatory issues is the fact that hot water well drilling requires somewhat greater care particularly in mud rotary type drilling, in order to avoid negative impact on the producing aquifer from the drilling "mud" (if a conventional or "mud" rotary rig is used to drill the well). These issues tend to result in geothermal wells costing more than standard water wells of the same depth and capacity.

The cost of a well is dependant on many factors including depth, drilling difficulty (rock or softer formations), casing size and extent, cementing requirements, regulatory issues, distance to job site and other issues. As a result it is not possible to address all the variables involved while maintaining a simple and easy to use cost estimating method for those unfamiliar with the details of well construction.

Determining Geothermal Well Costs

There are two approaches to determining the cost to drill a well of the same type that exists on the property. The first and most accurate would be to have a drilling contractor review the completion report for the existing well and generate an estimate of the cost to drill a similar well. To facilitate this approach it is useful to obtain a copy of the well completion report (see Appendix 3 for examples) from the state. These reports (actually a form of one to several pages depending on the state) are filed by the driller upon completion of the well. They describe the geological materials in which the well was completed, describe the details of the well construction (casing and hole diameters, seal depth and type, screen type and length, gravel pack etc) and list pertinent hydrogeologic information such as water level, temperature, number of water bearing intervals penetrated and pump test results if any. In short the well completion report provides a very complete picture of the well and it's construction.

For the most part these well completion reports are public information and in some states are available directly on the Internet. Those states with Internet access are listed below:

Oregon Department of Water Resources http://deschutes.wrd.state.or.us/apps/gw/well_log2000/
Nevada Division of Water Resources http://ndwr.state.nv.us/IS/wlog/wlog.htm
Idaho Department of Water Resources http://www.idwr.state.id.us/info/water/drilling/search.htm

If detailed information about the well construction is available but local drillers are unavailable or unresponsive to a request for an estimate, the Geo-Heat Center may be contacted for assistance.

Simplified Well Cost Data

As indicated above, a great many variables can impact well construction cost. Taking all of these factors into full consideration may be beyond the scope of the cost estimating effort suitable for the project or the necessary information about the construction of the well may not be available.

As a compromise, a second method of evaluating the cost of wells using the following figures was developed. Each is based on the recent experiences of the Geo-Heat Center with actual projects in the western U.S. Figure 4 provides costs for wells with what is known as an "open hole" completion. This type of well is used in areas where the geothermal water is produced from a geologic formation composed of rock. Since the rock is able to stand open without support, casing is not required - at least in the lower portion of well. Curves are provided for four different flow rates - 100, 250, 500 and 750 gpm. The flow for which the well is designed has an impact on the cost since larger diameters are required to accommodate the larger pumps in higher capacity wells. For wells of less than 100 gpm, use the 100 gpm curve.

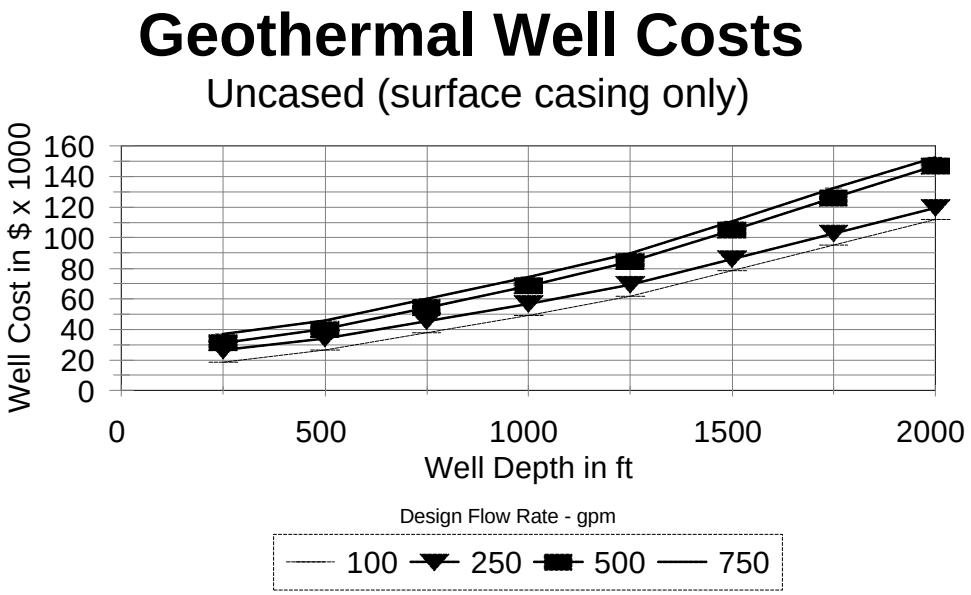

Figure 4.

Figure 5 provides the same type of information and in the same format for wells with a fully cased completion. This type of construction would be used in so-called incompetent geological formations (those which are composed of materials which will not resist collapse without the support of casing).

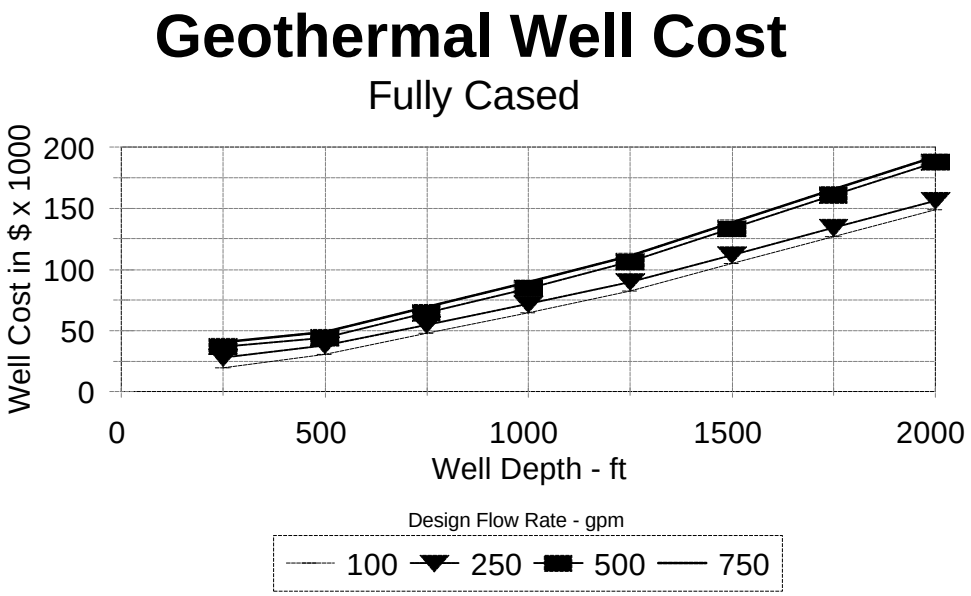

Figure 5.

Properly constructed wells, although they do not have an infinite life can serve for well beyond the useful life of the buildings and processes to which they may be delivering heat. The Boise Warm Springs Water District heating system in Boise, ID, has been serving it's customers from the same two wells for over a century. The OIT Campus in Klamath Falls OR has been served by the same 3 wells continuously since 1962. In both cases, maintenance has been required periodically on the well pumps installed in these wells but no maintenance has been required on the wells themselves. As a result it is not necessary to adjust the well cost figures for maintenance cost requirements, though the value of the well may be prorated on the basis of an assumed useful lie. The service life assumed should be no less than 30 to 40 years, however.

Well Pumps

An existing well may be equipped with a well pump and the value of this equipment should be considered in the course of evaluating the improvements. Large geothermal applications using geothermal water in excess of 140 ^{o}F use primarily line shaft type well pumps. These are similar to the type of pumps used in agriculture for irrigation. A surface electric motor turns a shaft that transmits the rotary motion to the pump which is located below the water level in the well. In a departure from irrigation pumps, those serving geothermal operations often use oil for lubrication of the pump's shaft. This design, referred to as "enclosed lines shaft," is somewhat more expensive than the "open line shaft" used for irrigation. Figure 6 indicates the costs associated with the installation of new, enclosed line shaft, well pumps for geothermal applications. Under the best of conditions, these pumps may operate for as long as 15 years between rebuilds. Under the worst of conditions this interval may be as short as 3 to 5 years. As a result, the values in Figure 6 would are reflective of the replacement value of the equipment rather than the actual value of an existing pump in an existing well.

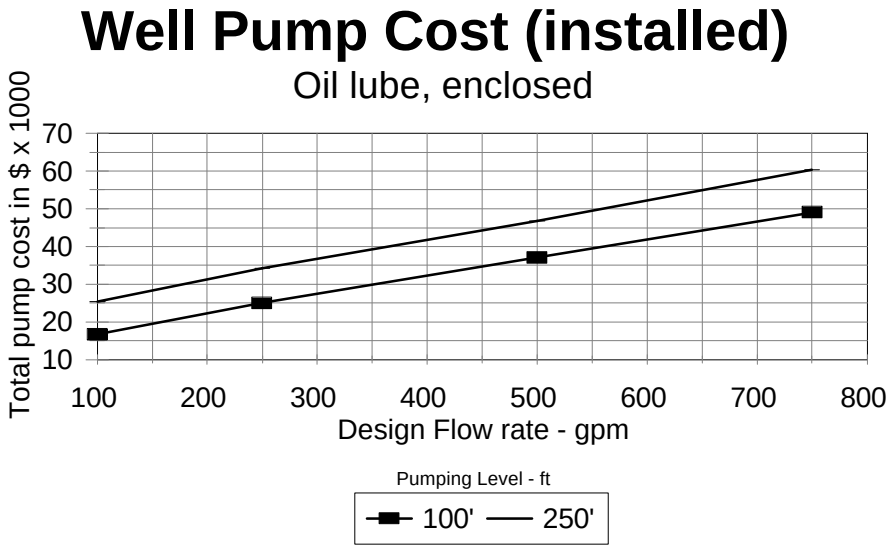

Figure 6.

DATA FROM ACTUAL SALES TRANSACTIONS

The original intent for this document was to include data from actual sales involving properties with geothermal wells in place. This approach would have corresponded to the "Comparables" approach to valuation in conventional real estate appraisal. To gather the necessary data a survey form was developed and mailed to 14 counties in the western states in which there is substantial geothermal activity. Unfortunately, the response was poor (3 returned forms). Beyond this, it was determined that geothermal wells are specifically excluded from real property value (for tax determination) in Oregon and Montana. In Nevada, geothermal wells are considered but they are treated as water wells. As a result, county tax offices are not able to identify properties with geothermal wells to use as a basis for this task as we planned. Through other records we have identified approximately 35 properties in Oregon and Nevada with geothermal wells. The well completion reports from these properties are included as Appendix 3 to this report.

APPENDIX 1

GEO-HEAT CENTER

Oregon Institute of Technology Klamath Falls, Oregon 97601 503/885-1750 FAX 503/885-1754

Paul J. Lienau

January 31, 1996

Dear Ken:

Enclosed are the seven sensitivity evaluations for the Cedarville Elementary School as we discussed on the phone. The same basic approach is used in each case. Briefly, this consists of calculating the avoided conventional boiler, and subtracting from these savings the maintenance cost of the geothermal system. The resulting annual cash flows are then discounted back to present value to arrive at the present value of the benefit to the school of using geothermal energy.

The input for the first five cases varies only by discount rate with rates of 6% to 10% used. The last two cases were run at an 8% discount rate with fuel and electricity inflation rates at 1% above forecasts and 1% below forecasts.

Following are brief explanations of each of the column an the sheets.

Conventional fuel - Based on the value of 4140 gallons per year savings from the Gertch/Juncal feasibility study of 1984. Priced at $1.03 per gallon.

Conventional fuel inflation rate - Based on Washington State Energy Office rates of 1.0% (1995-2000), 1.3% (2001-2010, 1.7% (2010-2020) real inflation for these periods.

Net Electricity - This is the difference between the space heating electricity savings from thr G/J study (42885 kWh @ .44 $/kWh = $1887) and the cost to operate the well pump (79692 kWh @ .44 $/kWh + 10 $/mo).

Interest rate - The rate at which money is borrowed by the school.

Term - Term for which the loan runs.

Geothermal maintenance - Maintenance on the well pump and pipeline. Although the actual costs incurred to date are less than this value, at some point the school will have to replace or rebuild the well pump (about $6000 for a 10 hp pump and motor).

Boiler cost - In the absence of the geothermal source, the school would have to return to the original fuel source. This would require the installation of a boiler. The capital cost consists of the following:

400,000 Btu/hr boiler		6,600
Piping		500
Flue/draft control		1,720
Fuel tank dbl wall 2000 gal.		5,100
Fuel piping		750
	Subtotal	$14,570
	20% cont.	2,900
	Total	$17,570

Source: 1996 Means Mech. Cost Data

Credit eligible - Does not apply

Basic inflation rate - Used for escalation of the maintenance costs. From the 1994 - 2015 DRI Trend 25/Yr 8/94 Forecast.

Electricity inflation rate - Surprise Valley Electric operates in both OR and CA. Their rates are more closely aligned with northwest rates than with CA. As a result, I have used the inflation rates published by the Washington State Energy Office for public utilities for the following periods: 1995-2000, 0.1%; 2001-2020, 0.3%.

The spreadsheet subtracts column 3 from the sum of column 1, 2, 4 and 5 to arrive at the annual savings resulting from the use of geothermal. This value is displayed in column 6. The column 6 values are summed to arrive at a yearly running total which is displayed in column 7. The column 6 values are discounted back to present value (at the rate specified in the input) and these values are displayed in column 8. The column 8 values are summed to arrive at a yearly running total as shown in column 9. The last value in column 9 would be the present value of the savings resulting from the use of geothermal compared to conventional fuel.

In summary, the present value of the net savings the school is achieving through the use of geothermal over the 20-year time frame varies from $63,061 (6% discount rate) to $44,906 (10% discount rate). If you have any questions or if we can be of assistance in the future, please don't hesitate to contact us.

Sincerely,

Kevin Rafferty, P.E.
Associate Director

KR/dg

Enclosures

Boiler Maint	260	Geo Maint	400
Conventional Fuel	4367	Boiler Cost	17500
Conv Fuel Inf Rate	0.0467	Credit Eligible	0
Pump Electricity	-1739	Discount Rate	0.06
Interest Rate	0.07	Basic Inf Rate	0.0325
Term	20	Elec Inf Rate	0.0380

Year	1 Conv Fuel	2 Pump Elec	3 Geo Maint	4 Debt Service	5 Boiler Maint	6 Savings	7 Cumulative Savings	8 PV Savings	9 Cumlative PV Svngs
1	4367	-1739	400	1652	260	4140	4140	3906	3906
2	4571	-1805	413	1652	268	4273	8413	3803	7709
3	4784	-1874	426	1652	277	4413	12826	3706	11414
4	5008	-1945	440	1652	286	4561	17387	3613	15027
5	5242	-2019	455	1652	295	4716	22103	3524	18551
6	5486	-2095	469	1652	305	4879	26981	3439	21990
7	5743	-2175	485	1652	315	5050	32031	3358	25348
8	6011	-2258	500	1652	325	5230	37261	3281	28629
9	6292	-2344	517	1652	336	5419	42680	3208	31837
10	6585	-2433	533	1652	347	5618	48298	3137	34974
11	6893	-2525	551	1652	358	5827	54125	3070	38044
12	7215	-2621	569	1652	370	6047	60172	3005	41049
13	7552	-2721	587	1652	382	6278	66449	2943	43992
14	7904	-2824	606	1652	394	6520	72970	2884	46876
15	8274	-2931	626	1652	407	6775	79745	2827	49703
16	8660	-3043	646	1652	420	7043	86788	2772	52475
17	9064	-3158	667	1652	434	7324	94112	2720	55195
18	9488	-3278	689	1652	448	7620	101732	2670	57865
19	9931	-3403	711	1652	462	7931	109663	2621	60486
20	10395	-3532	734	1652	477	8257	117920	2575	63061

Boiler Maint	260	Geo Maint	400
Conventional Fuel	4367	Boiler Cost	17500
Conv Fuel Inf Rate	0.0467	Credit Eligible	0
Pump Electricity	-1739	Discount Rate	0.07
Interest Rate	0.07	Basic Inf Rate	0.0325
Term	20	Elec Inf Rate	0.0380

Year	1 Conv Fuel	2 Pump Elec	3 Geo Maint	4 Debt Service	5 Boiler Maint	6 Savings	7 Cumulative Savings	8 PV Savings	9 Cumlative PV Svngs
1	4367	-1739	400	1652	260	4140	4140	3869	3869
2	4571	-1805	413	1652	268	4273	8413	3732	7601
3	4784	-1874	426	1652	277	4413	12826	3603	11204
4	5008	-1945	440	1652	286	4561	17387	3479	14683
5	5242	-2019	455	1652	295	4716	22103	3362	18046
6	5486	-2095	469	1652	305	4879	26981	3251	21296
7	5743	-2175	485	1652	315	5050	32031	3145	24441
8	6011	-2258	500	1652	325	5230	37261	3044	27485
9	6292	-2344	517	1652	336	5419	42680	2948	30433
10	6585	-2433	533	1652	347	5618	48298	2856	33289
11	6893	-2525	551	1652	358	5827	54125	2768	36057
12	7215	-2621	569	1652	370	6047	60172	2685	38742
13	7552	-2721	587	1652	382	6278	66449	2605	41347
14	7904	-2824	606	1652	394	6520	72970	2529	43875
15	8274	-2931	626	1652	407	6775	79745	2456	46331
16	8660	-3043	646	1652	420	7043	86788	2386	48717
17	9064	-3158	667	1652	434	7324	94112	2319	51035
18	9488	-3278	689	1652	448	7620	101732	2255	53290
19	9931	-3403	711	1652	462	7931	109663	2193	55483
20	10395	-3532	734	1652	477	8257	117920	2134	57617

Boiler Maint	260	Geo Maint	400
Conventional Fuel	4367	Boiler Cost	17500
Conv Fuel Inf Rate	0.0467	Credit Eligible	0
Pump Electricity	-1739	Discount Rate	0.08
Interest Rate	0.07	Basic Inf Rate	0.0325
Term	20	Elec Inf Rate	0.0380

Year	1 Conv Fuel	2 Pump Elec	3 Geo Maint	4 Debt Service	5 Boiler Maint	6 Savings	7 Cumulative Savings	8 PV Savings	9 Cumlative PV Svngs
1	4367	-1739	400	1652	260	4140	4140	3833	3833
2	4571	-1805	413	1652	268	4273	8413	3664	7497
3	4784	-1874	426	1652	277	4413	12826	3503	11000
4	5008	-1945	440	1652	286	4561	17387	3352	14353
5	5242	-2019	455	1652	295	4716	22103	3209	17562
6	5486	-2095	469	1652	305	4879	26981	3074	20636
7	5743	-2175	485	1652	315	5050	32031	2947	23583
8	6011	-2258	500	1652	325	5230	37261	2826	26408
9	6292	-2344	517	1652	336	5419	42680	2711	29119
10	6585	-2433	533	1652	347	5618	48298	2602	31721
11	6893	-2525	551	1652	358	5827	54125	2499	34221
12	7215	-2621	569	1652	370	6047	60172	2401	36622
13	7552	-2721	587	1652	382	6278	66449	2308	38930
14	7904	-2824	606	1652	394	6520	72970	2220	41150
15	8274	-2931	626	1652	407	6775	79745	2136	43286
16	8660	-3043	646	1652	420	7043	86788	2056	45341
17	9064	-3158	667	1652	434	7324	94112	1980	47321
18	9488	-3278	689	1652	448	7620	101732	1907	49228
19	9931	-3403	711	1652	462	7931	109663	1838	51066
20	10395	-3532	734	1652	477	8257	117920	1772	52837

Boiler Maint	260	Geo Maint	400
Conventional Fuel	4367	Boiler Cost	17500
Conv Fuel Inf Rate	0.0467	Credit Eligible	0
Pump Electricity	-1739	Discount Rate	0.09
Interest Rate	0.07	Basic Inf Rate	0.0325
Term	20	Elec Inf Rate	0.0380

Year	1 Conv Fuel	2 Pump Elec	3 Geo Maint	4 Debt Service	5 Boiler Maint	6 Savings	7 Cumulative Savings	8 PV Savings	9 Cumlative PV Svngs
1	4367	-1739	400	1652	260	4140	4140	3798	3798
2	4571	-1805	413	1652	268	4273	8413	3597	7395
3	4784	-1874	426	1652	277	4413	12826	3408	10803
4	5008	-1945	440	1652	286	4561	17387	3231	14034
5	5242	-2019	455	1652	295	4716	22103	3065	17098
6	5486	-2095	469	1652	305	4879	26981	2909	20007
7	5743	-2175	485	1652	315	5050	32031	2762	22770
8	6011	-2258	500	1652	325	5230	37261	2625	25395
9	6292	-2344	517	1652	336	5419	42680	2495	27890
10	6585	-2433	533	1652	347	5618	48298	2373	30263
11	6893	-2525	551	1652	358	5827	54125	2258	32521
12	7215	-2621	569	1652	370	6047	60172	2150	34671
13	7552	-2721	587	1652	382	6278	66449	2048	36718
14	7904	-2824	606	1652	394	6520	72970	1951	38669
15	8274	-2931	626	1652	407	6775	79745	1860	40529
16	8660	-3043	646	1652	420	7043	86788	1774	42303
17	9064	-3158	667	1652	434	7324	94112	1692	43996
18	9488	-3278	689	1652	448	7620	101732	1615	45611
19	9931	-3403	711	1652	462	7931	109663	1542	47154
20	10395	-3532	734	1652	477	8257	117920	1473	48627

Boiler Maint	260	Geo Maint	400
Conventional Fuel	4367	Boiler Cost	17500
Conv Fuel Inf Rate	0.0467	Credit Eligible	0
Pump Electricity	-1739	Discount Rate	0.1
Interest Rate	0.07	Basic Inf Rate	0.0325
Term	20	Elec Inf Rate	0.0380

Year	1 Conv Fuel	2 Pump Elec	3 Geo Maint	4 Debt Service	5 Boiler Maint	6 Savings	7 Cumulative Savings	8 PV Savings	9 Cumlative PV Svngs
1	4367	-1739	400	1652	260	4140	4140	3764	3764
2	4571	-1805	413	1652	268	4273	8413	3532	7295
3	4784	-1874	426	1652	277	4413	12826	3316	10611
4	5008	-1945	440	1652	286	4561	17387	3115	13726
5	5242	-2019	455	1652	295	4716	22103	2928	16654
6	5486	-2095	469	1652	305	4879	26981	2754	19408
7	5743	-2175	485	1652	315	5050	32031	2591	21999
8	6011	-2258	500	1652	325	5230	37261	2440	24439
9	6292	-2344	517	1652	336	5419	42680	2298	26737
10	6585	-2433	533	1652	347	5618	48298	2166	28903
11	6893	-2525	551	1652	358	5827	54125	2042	30946
12	7215	-2621	569	1652	370	6047	60172	1927	32872
13	7552	-2721	587	1652	382	6278	66449	1818	34691
14	7904	-2824	606	1652	394	6520	72970	1717	36408
15	8274	-2931	626	1652	407	6775	79745	1622	38029
16	8660	-3043	646	1652	420	7043	86788	1533	39562
17	9064	-3158	667	1652	434	7324	94112	1449	41011
18	9488	-3278	689	1652	448	7620	101732	1371	42382
19	9931	-3403	711	1652	462	7931	109663	1297	43679
20	10395	-3532	734	1652	477	8257	117920	1227	44906

APPENDIX 2

INFORMATION FOR THE PROSPECTIVE GEOTHERMAL HOME BUYER

Kevin Rafferty PE
Geo-Heat Center

Introduction

Welcome to Klamath Falls! If you are not from the area a geothermally heated home may be something unfamiliar to you. This package is intended to provide some background information to guide you through the purchase of a home equipped with a geothermal system.

Geothermal energy resources and their use are not unique to the Klamath Falls area. Although our area is characterized by a high degree of development, many other areas of the Western US (Reno, NV Boise, ID Susanville, CA, for example) also have extensive geothermal resources and development. The geothermal hot water available here in Klamath Falls results from surface water circulating, through faults to a great depth at which the rock temperature is very high. Passing through this rock, the water is heated. Since hot water is less dense than cold water, it tends to rise toward the surface where it can be accessed through wells. Much of the geothermal water in town issues from a fault roughly oriented northwest to southeast between OIT on the north and Olene Gap on the south. The depth of hot wells in this area varies from just a few hundred feet to as much as 2000 ft. Temperatures are in the range of 100ºF to 230ºF with most home heating wells in the 150ºF to 200ºF range.

One aspect of geothermal that is somewhat unique to Klamath Falls is the use of the Downhole Heat Exchanger (also known as a DHE or a "loop"). This is simply a loop of pipe which is installed in the well and connected to the home's heating system. Water passes through the DHE, is heated and then passes through the homes heating system giving up its heat to the space. It is then returned to the DHE to repeat the process. This arrangement eliminates the need to pump water from the well (only heat is removed) and simplifies the system. It is limited to relatively small systems of the type that heat one home or a group of homes. It is also limited geographically. The performance of DHE's has been poor in other regions of the US (notably Reno) where they have been tried.

The following paragraphs offer some more detailed comments on the systems and some suggestions for questions to ask of your agent or the existing homeowner which appear in **bold** type. There is little to be gained in having a well driller, plumber or Geo-Heat Center Staff inspect a system such as this. Asking the questions suggested below is a far more effective approach.

Wells

There are two basic types of hot well construction. The older wells are simply a borehole in which a small amount of casing (20 ft to 100 ft) is installed in the upper portion to seal off any cold water. The balance of the borehole is "open hole" - simply a cylindrical hole in the rock. In many of these wells, a small quantity of water was continuously pumped from the well to maintain temperature. This practice is no longer permitted under city ordinance (any water pumped from a geothermal well must be injected into another well).

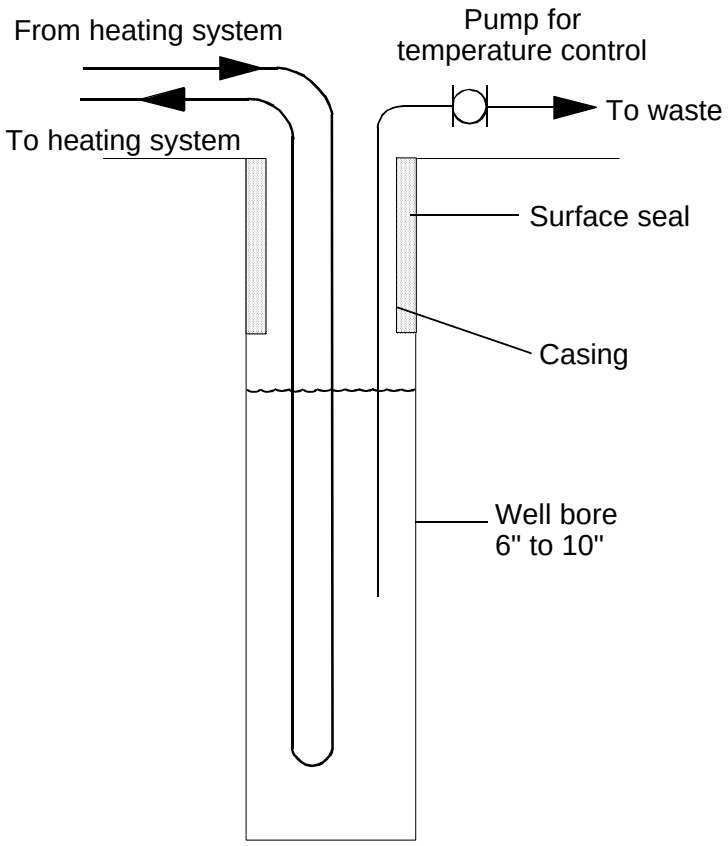

Older Wells

Newer wells use a larger borehole diameter (12" or so) and a smaller diameter casing is subsequently installed to the bottom of the well. Perforations are made in the casing just below the water level and near the bottom of the well. This leaves an annular space between the larger borehole and the smaller casing. The DHE is installed inside of the casing. As heat is removed from the well, the water around the DHE (inside the casing) is cooled and tends to fall to the bottom of the well. As this happens hot water entering the well rises up in the annular space. This natural movement of the water eliminates the need to pump water from the well to maintain temperature.

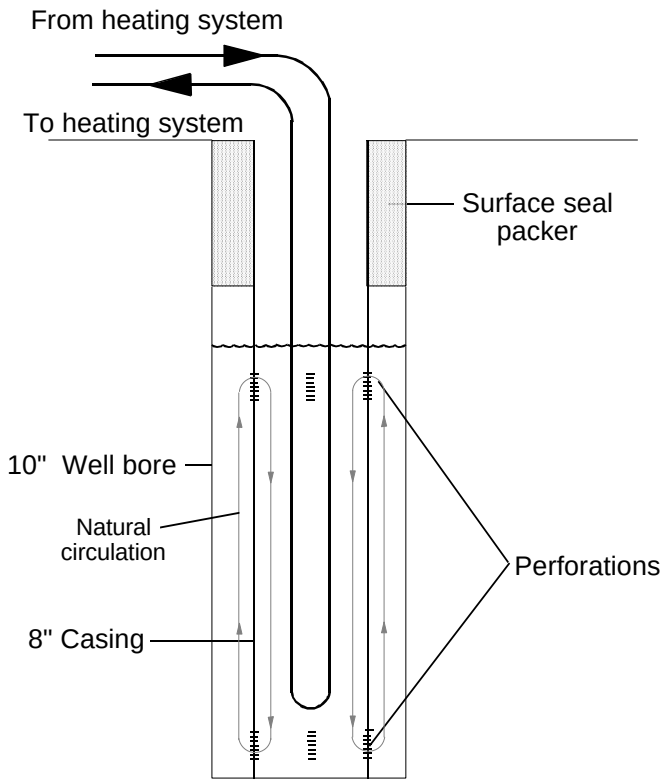

Newer Wells

Wells very rarely fail - at least to the extent that they are no longer useable. One condition that does occur from time to time in wells in the hillside area is referred to as a "cave in". The reality is a good deal less catastrophic than it sounds. Due to ground vibrations and natural erosion, an accumulation of soil and rock fragments can accumulate in the bottom of the well. Over a period of many years this material can build up and cut off or reduce the flow of hot water into the well thus reducing it's heating capacity. The remedy to this is to remove the DHE from the well, and have a driller "bail" the well. This is a procedure in which the driller lowers a tool called a bailer into the well to pick up the loose material that has collected in bottom. This procedure could be accomplished in a single day but most likely would require two days to complete. This is not a common problem. Of the 600 hot wells in Klamath Falls, probably less than 10 require bailing in any given year.

Buyers unfamiliar with geothermal often ask about the possibility of the geothermal resource cooling off over a period of years. This has not occurred in any well in the Klamath Falls area to our knowledge. The size of the heat source relative to the demands placed on it by the various uses is such that no detectable temperature change occurs.

Downhole Heat Exchanger (DHE)

The DHE is usually constructed of ordinary carbon steel (sometimes called "black iron") piping. In most systems it is either 2'' or 2 ½" diameter. If a domestic hot water heat exchanger is used, it is normally 3/4" or 1" in diameter. The length of the DHE varies with the depth of the well and the practices of the contractor at the time it was installed. A rule of thumb used in the past was that 1 foot of DHE was required for each 1500 Btu/hr of heating load.

The major concern with respect to the DHE is corrosion on the outside surface of the pipe. Because the pipe is submerged in hot water and exposed to air, corrosion is a natural occurrence. The result of this is that most DHE's will require replacement of the piping near the water line at intervals of 10 to 15 years. This is an average, with some wells causing failure of the pipe in as little as 5 years. Replacement of the piping requires the services of a water well pump company or a driller. A truck equipped with a tall "mast" and a winch is brought in and the piping is removed from the well and the corroded pipe replaced. This operation can normally be accomplished in 1 day. While the pipe is out of the well, it is a good opportunity to have a temperature log of the well performed. Time and equipment permitting, this is a service the Geo-Heat Center can perform at no cost to the homeowner.

Corrosion of the DHE piping, as mentioned above is a result of the exposure of the wetted pipe surface to the air. For many years, well owners poured old motor oil, paraffin and other substances down the well to coat the pipe in an attempt to reduce corrosion. For obvious environmental reasons this practice is not recommended. Recent research has indicated that simply sealing the top of the well to prevent the entrance of air (which is the fuel for the corrosion reaction) is a more effective strategy. This can be easily accomplished with the "foam in a can" type products often used for home weatherzation.

Obviously one of the pieces of information that you would want to request from the seller is the last time the DHE piping was serviced and/or replaced.

Homes Connected to A Multi-Home System

There are many systems in Klamath Falls in which several homes are connected to a single well. In most cases, these systems serve from 2 to 5 homes. There are several areas about which you should seek information.

Most multi-home systems involve a network of buried pipe to deliver the hot water to each home. This piping is usually uninsulated carbon steel pipe. Just as in the case of the DHE, external corrosion of this pipe is a common occurrence. Several of the systems have experienced leaks in the buried piping after approximately 15 years of service. Repair of these leaks requires first locating the leak and then excavating the site (the pipe is normally about 3 to 4 ft deep) and

replacing the failed pipe. **For homes on such a system it would be advisable to determine the age of the system, whether there is an accurate layout of the buried piping and if there have been any failures to date.**

As a result of the need to periodically maintain the system, it is useful to have a formal agreement between the owners of homes connected to such a system. In this way there can be no confusion as to the equitable distribution of costs when repairs are necessary. **You should determine whether such an agreement is in place and you may wish to have your attorney review the document.**

The agreement may also cover the distribution of costs associated with the operation of the main circulating pump. Some systems have a single circulating pump which delivers hot water from the well to all the homes connected to the system. This is the least complicated and most trouble free arrangement. A second design involves the use of a pump at each home. This design can result in the individual pumps "fighting each other" and the most water going to the home with the largest pump.

Controls and Sequence of Operation

Each geothermal system is unique and the specifics of it's installation are a reflection of the contractor responsible for it and the period in which it was installed.

The simplest systems are the so called "thermosyphon" designs. These systems operate without the use of a circulating pump and rely only on natural convection to circulate the water through the piping. In most cases the only controls are individual hand valves on the radiators or a main control valve that responds to the thermostat. These are the oldest systems and are generally found only in homes served by a single well.

Newer systems that use a pump to circulate the hot water, often have more complex controls. In addition, systems serving more than one home have the added complexity of controls to assure that the water is distributed evenly among the individual homes. Since no two systems are the same it is important for the existing owner (who is the most familiar with the operation) to pass this information along to the new owner.

It is important that the seller provide a complete set of instructions (and preferably a diagram identifying the control and shut off valves) along with any periodic or seasonal adjustments that are necessary.

Domestic Hot Water

As discussed above, one method for heating domestic hot water is the use of a separate DHE specifically for that purpose.

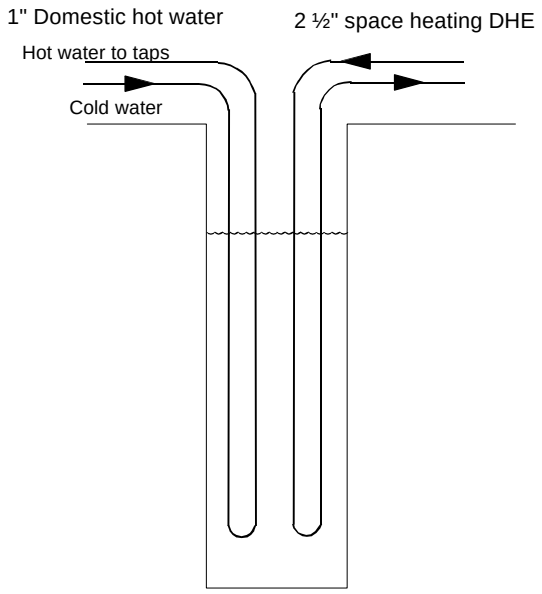

Separate Domestic Hot Water with DHE

The second approach to domestic hot water heating is the use of a heat exchanger. This is the design used on most systems serving more than one home. A heat exchanger is a device that transfers heat from one stream of water to another without the two streams mixing. For the heating systems in Klamath Falls, water from the DHE loop is passed through one side of the heat exchanger and cold city water is passed through the other side to be heated.

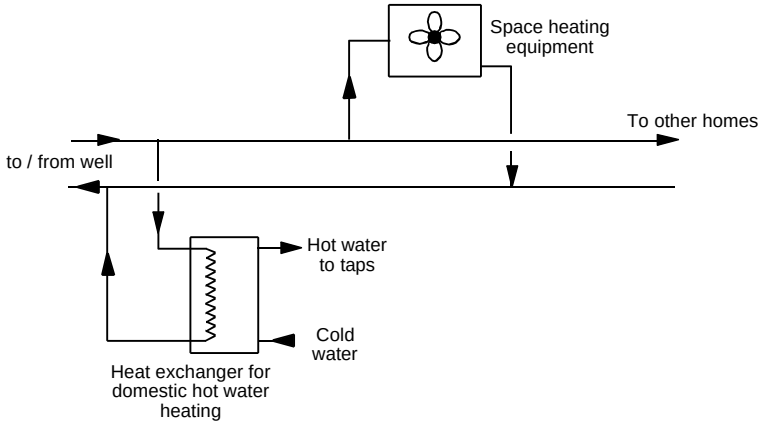

Multi-Home System

A third approach is to draw water directly from the space heating DHE. As hot water is drawn from the taps, cold water is admitted to the loop to make up the difference. This method was common in the earliest systems but is rare today.

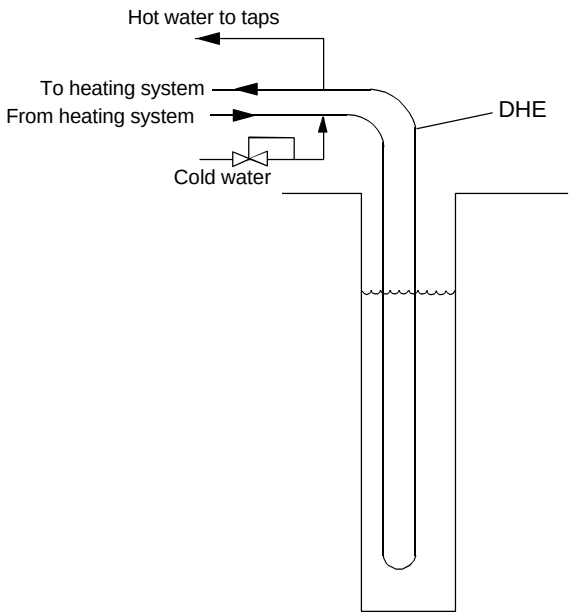

With all three of these designs it is possible for the water at the tap to approach the well water temperature. In some cases this would result in a temperature of 180ºF or more. In most homes, plumbing systems have been equipped with a device called a tempering valve. This valve serves to limit the maximum water temperature delivered to the taps by mixing hot and cold water. If small children will be living in the home it would be advisable to verify that a tempering valve is in place.

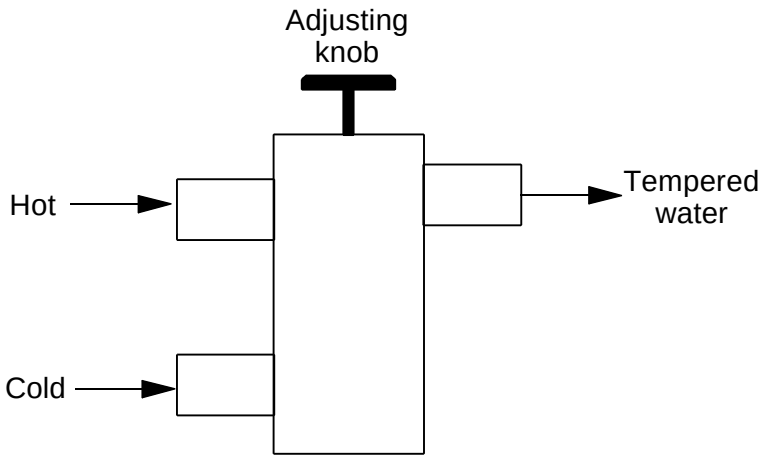

Tempering Valve

For More Information

If you have additional questions, please don't hesitate to contact the Geo-Heat Center at 541-885-1750 voice, 541-885-1754 FAX or geoheat@oit.edu.

APPENDIX 3

RECEIVED

MAY 28 1998

WATER RESOURCES DEPT.
SALEM, OREGON

Klam 5125L

L 20315

STATE OF OREGON WATER WELL REPORT
(as required by ORS 537.765)

Instructions for completing this report are on the last page of this form.

(START CARD) # 109948

(1) OWNER: Well Number 2

Name [redacted]

Address [redacted]

City MIDLAND State OR Zip 97634

(2) TYPE OF WORK

[X] New Well [ ] Deepening [ ] Alteration (repair/recondition) [ ] Abandonment

(3) DRILL METHOD:

[X] Rotary Air [ ] Rotary Mud [ ] Cable [ ] Auger

[ ] Other

(4) PROPOSED USE:

[X] Domestic [ ] Community [ ] Industrial [ ] Irrigation

[ ] Thermal [ ] Injection [ ] Livestock [ ] Other

(5) BORE HOLE CONSTRUCTION:

Special Construction approval [ ] Yes [X] No Depth of Completed Well 406 ft.

Explosives used [ ] Yes [X] No Type Amount

HOLE Diameter	From	To	SEAL Material	From	To	Sacks or pounds
10"	0	38	CEMT&	0		6 SKS
			BENTONITE		38	1.5 SKS
6"	38	406	OPEN			

How was seal placed: Method [ ] A [ ] B [X] C [ ] D [ ] E

[ ] Other

Backfill placed from ft. to ft. Material

Gravel placed from ft. to ft. Size of gravel

(6) CASING/LINER:

	Diameter	From	To	Gauge	Steel	Plastic	Welded	Threaded
Casing:	6"	+1	39	25	X		X	
Liner:	NONE							

Final location of shoe(s) NONE

(7) PERFORATIONS/SCREENS:

[ ] Perforations Method NONE

[ ] Screens Type Material

From	To	Slot size	Number	Diameter	Tele/pipe size	Casing	Liner

(8) WELL TESTS: Minimum testing time is 1 hour

[ ] Pump [ ] Bailer [X] Air [ ] Flowing Artesian

Field gal/min	Drawdown	Drill stem at	Time
20		230 FT.	1 hr.

Temperature of water 125 F Depth Artesian Flow Found NONE

Was a water analysis done? [ ] Yes By whom

Did any strata contain water not suitable for intended use? [ ] Too little

[ ] Salty [ ] Muddy [ ] Odor [ ] Colored [ ] Other

Depth of strata: NONE

(9) LOCATION OF WELL by legal description:

County KLAMATH Latitude Longitude

Township 40 S N or S Range 09 E E or W. WM.

Section 27 NE 1/4 SW 1/4

Tax Lot 200 Lot Block Subdivision

Street Address of Well (or nearest address) 3223 LOWER LAKE RD. KLAMATH FALLS, OR

(10) STATIC WATER LEVEL:

163 FT ft. below land surface. Date 05-18-98

Artesian pressure lb. per square inch. Date

(11) WATER BEARING ZONES:

Depth at which water was first found 400 FT.

From	To	Estimated Flow Rate	SWL
400	406	55 GPM	163

(12) WELL LOG:

Ground Elevation 4150

Material	From	To	SWL
TOP SOIL	0	3	
BROWN CLAY & BOULDERS	3	11	
YELLOW CLAY	11	37	
BROWN CLAY & CLAYSTONE	37	104	
BROWN & GRAY CLAY & CLAYSTONE	104	118	
GRAY CLAY	118	172	
GRAY CLAYSTONE & CLAY	172	184	
SANDY GRAY & BLUE CLAY & CLAYSTONE	184	195	
GRAY CLAY	195	285	
GRAY CLAYSTONE	285	314	
BLUE SANDSTONE & GRAY CLAYSTONE	314	338	
HARD BLACK CLAYSTONE	338	382	
GRAY CLAY & CLAYSTONE	382	400	
FRACTURED BLACK CLAY-STONE W/STREAKS OF GRAY CLAYSTONE	400	406	163

Date started 05-13-98 Completed 05-14-98

(unbonded) Water Well Constructor Certification:

I certify that the work I performed on the construction, alteration, or abandonment of this well is in compliance with Oregon water supply well construction standards. Materials used and information reported above are true to the best of my knowledge and belief.

WWC Number 1560

Signed J. Bret Pinkerton Date 5-21-98

(bonded) Water Well Constructor Certification:

I accept responsibility for the construction, alteration, or abandonment work performed on this well during the construction dates reported above. All work performed during this time is in compliance with Oregon water supply well construction standards. This report is true to the best of my knowledge and belief.

WWC Number 777

Signed Stephen R. Hughes Date 5-21-98

ORIGINAL & FIRST COPY-WATER RESOURCES DEPARTMENT SECOND COPY-CONSTRUCTOR THIRD COPY-CUSTOMER

RECEIVED
DEC 18 1997
WATER RESOURCES DEPT.
SALEM, OREGON

WELL I.D.# KLAM 51129

L10244

(START CARD) # 83055

STATE OF OREGON
WATER SUPPLY WELL REPORT
(as required by ORS 537.765)
Instructions for completing this report are on the last page of this form.

(1) OWNER: Well Number _____
Name [redacted]
Address [redacted]
City Klamath Falls, State OR Zip 97601

(2) TYPE OF WORK
[X] New Well [ ] Deepening [ ] Alteration (repair/recondition) [ ] Abandonment

(3) DRILL METHOD:
[X] Rotary Air [ ] Rotary Mud [ ] Cable [ ] Auger
[ ] Other _____

(4) PROPOSED USE:
[X] Domestic [ ] Community [ ] Industrial [ ] Irrigation
[ ] Thermal [ ] Injection [ ] Livestock [ ] Other _____

(5) BORE HOLE CONSTRUCTION:
Special Construction approval [ ] Yes [X] No Depth of Completed Well 289 ft.
Explosives used [ ] Yes [X] No Type _____ Amount _____

HOLE Diameter	From	To	Material	SEAL From	To	Sacks or pounds
12	0	21½	cement	0	21	11
6	21½	289				

How was seal placed: Method [ ] A [ ] B [X] C [ ] D [ ] E
[ ] Other _____
Backfill placed from _____ ft. to _____ ft. Material _____
Gravel placed from _____ ft. to _____ ft. Size of gravel _____

(6) CASING/LINER:

	Diameter	From	To	Gauge	Steel	Plastic	Welded	Threaded
Casing:	6	+1½	21½	.250	X		X	
Liner:								

Final location of shoe(s) _____

(7) PERFORATIONS/SCREENS:
[ ] Perforations Method _____
[ ] Screens Type _____ Material _____

From	To	Slot size	Number	Diameter	Tele/pipe size	Casing	Liner

(8) WELL TESTS: Minimum testing time is 1 hour
[ ] Pump [ ] Bailer [X] Air [ ] Flowing Artesian

Yield gal/min	Drawdown	Drill stem at	Time
20		285	1 hr.

Temperature of water 120 Depth Artesian Flow Found _____
Was a water analysis done? no [ ] Yes By whom _____
Did any strata contain water not suitable for intended use? no [ ] Too little
[ ] Salty [ ] Muddy [ ] Odor [ ] Colored [ ] Other _____
Depth of strata: _____

(9) LOCATION OF WELL by legal description:
County Klamath Latitude _____ Longitude _____
Township 40S N or S Range 9E E or W. WM.
Section 34 NE 1/4 NE 1/4
Tax Lot 100 Lot _____ Block _____ Subdivision _____
Street Address of Well (or nearest address) _____

(10) STATIC WATER LEVEL:
133 ft. below land surface. Date 11/1/97
Artesian pressure _____ lb. per square inch. Date _____

(11) WATER BEARING ZONES:
Depth at which water was first found 259

From	To	Estimated Flow Rate	SWL
259	289	20	133

(12) WELL LOG:
Ground Elevation _____

Material	From	To	SWL
Topsoil	0	1	
Brn sandstone	1	2	
Yellow clay	2	3	
Coarse sandstone brn	3	7	
Yellow clay	7	94	
Gray clay and shale	94	289	133

Date started 10/28/97 Completed 11/20/97

(unbonded) Water Well Constructor Certification:
I certify that the work I performed on the construction, alteration, or abandonment of this well is in compliance with Oregon water supply well construction standards. Materials used and information reported above are true to the best of my knowledge and belief.
WWC Number _____
Signed _____ Date _____

(bonded) Water Well Constructor Certification:
I accept responsibility for the construction, alteration, or abandonment work performed on this well during the construction dates reported above. All work performed during this time is in compliance with Oregon water supply well construction standards. This report is true to the best of my knowledge and belief.
WWC Number 1228
Signed Larry H. Delpain Date 11/26/97

ORIGINAL & FIRST COPY-WATER RESOURCES DEPARTMENT SECOND COPY-CONSTRUCTOR THIRD COPY-CUSTOMER

RECEIVED

FEB 13 1998

WATER RESOURCES DEPT.
SALEM, OREGON

WELL I.D.# KLAM 51157 L10242

(START CARD) # 83046

STATE OF OREGON
WATER SUPPLY WELL REPORT
(as required by ORS 537.765)

Instructions for completing this report are on the last page of this form.

(1) OWNER: Well Number

Name [redacted]

Address [redacted]

City Klamath Falls, State OR Zip 97601

(2) TYPE OF WORK

[X] New Well [ ] Deepening [ ] Alteration (repair/recondition) [ ] Abandonment

(3) DRILL METHOD:

[X] Rotary Air [ ] Rotary Mud [ ] Cable [ ] Auger

[ ] Other

(4) PROPOSED USE:

[ ] Domestic [ ] Community [ ] Industrial [ ] Irrigation

[X] Thermal [ ] Injection [ ] Livestock [ ] Other

(5) BORE HOLE CONSTRUCTION:

Special Construction approval [ ] Yes [X] No Depth of Completed Well 360 ft.

Explosives used [ ] Yes [X] No Type Amount

HOLE Diameter	From	To	SEAL Material	From	To	Sacks or pounds
16½	0	200	cement	-1½	20	13
			bentonite	20	180	122
			cement	180	200	155
10"	200	360				

How was seal placed: Method [ ] A [ ] B [ ] C [X] D [ ] E

[ ] Other

Backfill placed from 20 ft. to 180 ft. Material 3/8 bentonite

Gravel placed from ft. to ft. Size of gravel

(6) CASING/LINER:

	Diameter	From	To	Gauge	Steel	Plastic	Welded	Threaded
Casing:	10	+1	217	.250	[X]	[ ]	[ ]	[ ]
					[ ]	[ ]	[ ]	[ ]
					[ ]	[ ]	[ ]	[ ]
					[ ]	[ ]	[ ]	[ ]
Liner:					[ ]	[ ]	[ ]	[ ]
					[ ]	[ ]	[ ]	[ ]

Final location of shoe(s)

(7) PERFORATIONS/SCREENS:

[ ] Perforations Method

[ ] Screens Type Material

From	To	Slot size	Number	Diameter	Tele/pipe size	Casing	Liner
						[ ]	[ ]
						[ ]	[ ]
						[ ]	[ ]
						[ ]	[ ]
						[ ]	[ ]

(8) WELL TESTS: Minimum testing time is 1 hour

[ ] Pump [ ] Bailer [X] Air [ ] Flowing Artesian

Yield gal/min	Drawdown	Drill stem at	Time
400		355	1 hr.

Temperature of water 184° Depth Artesian Flow Found

Was a water analysis done? NO [ ] Yes By whom

Did any strata contain water not suitable for intended use? yes [X] Too little

[ ] Salty [ ] Muddy [ ] Odor [ ] Colored [X] Other cold

Depth of strata: 82'

(9) LOCATION OF WELL by legal description:

County Klamath Latitude Longitude

Township 40S N or S Range 9E E or W. WM.

Section 34 NE 1/4 NE 1/4

Tax Lot 100 Lot Block Subdivision

Street Address of Well (or nearest address)

(10) STATIC WATER LEVEL:

83' ft. below land surface. Date 2/5/98

Artesian pressure lb. per square inch. Date

(11) WATER BEARING ZONES:

Depth at which water was first found 82'

From	To	Estimated Flow Rate	SWL
82'	92'	50	55'
312'	360'	400	83'

(12) WELL LOG:

Ground Elevation

Material	From	To	SWL
Topsoil	0	2	
Packed brn sand	2	15	
Yellow clay	15	82	
Gray clay & shale	82	190	55
Gray clay	190	260	
Yellow clay	260	295	
Gray clay	295	319	
Gray shale	319	360	82

Date started 10/30/97 Completed 2/5/98

(unbonded) Water Well Constructor Certification:

I certify that the work I performed on the construction, alteration, or abandonment of this well is in compliance with Oregon water supply well construction standards. Materials used and information reported above are true to the best of my knowledge and belief.

WWC Number

Signed Date

(bonded) Water Well Constructor Certification:

I accept responsibility for the construction, alteration, or abandonment work performed on this well during the construction dates reported above. All work performed during this time is in compliance with Oregon water supply well construction standards. This report is true to the best of my knowledge and belief.

WWC Number 1228

Signed Larry G. Delpain Date 2/12/98

ORIGINAL & FIRST COPY-WATER RESOURCES DEPARTMENT SECOND COPY-CONSTRUCTOR THIRD COPY-CUSTOMER

RECEIVED

FEB 13 1998

WATER RESOURCES DEPT.
SALEM, OREGON

STATE OF OREGON
WATER SUPPLY WELL REPORT
(as required by ORS 537.765)
Instructions for completing this report are on the last page of this form.

WELL I.D.# L10251
KLAM 51156
(START CARD) # 83045

(1) OWNER: Well Number

Name [redacted]
Address [redacted]
City Klamath Falls, State OR Zip 97601

(2) TYPE OF WORK
☐ New Well ☒ Deepening ☐ Alteration (repair/recondition) ☐ Abandonment

(3) DRILL METHOD:
☐ Rotary Air ☐ Rotary Mud ☒ Cable ☐ Auger
☐ Other

(4) PROPOSED USE:
☐ Domestic ☐ Community ☐ Industrial ☐ Irrigation
☒ Thermal ☐ Injection ☐ Livestock ☐ Other

(5) BORE HOLE CONSTRUCTION:
Special Construction approval ☐ Yes ☒ No Depth of Completed Well 265 ft.
Explosives used ☐ Yes ☒ No Type Amount

HOLE Diameter	From	To	SEAL Material	From	To	Sacks or pounds
8"	230	265				

How was seal placed: Method ☐ A ☐ B ☐ C ☐ D ☐ E
☐ Other
Backfill placed from ft. to ft. Material
Gravel placed from ft. to ft. Size of gravel

(6) CASING/LINER:

	Diameter	From	To	Gauge	Steel	Plastic	Welded	Threaded
Casing:	8	+1	19	.250	☒	☐	☐	☐
					☐	☐	☐	☐
					☐	☐	☐	☐
					☐	☐	☐	☐
Liner:					☐	☐	☐	☐
					☐	☐	☐	☐

Final location of shoe(s)

(7) PERFORATIONS/SCREENS:
☐ Perforations Method
☐ Screens Type Material

From	To	Slot size	Number	Diameter	Tele/pipe size	Casing	Liner
						☐	☐
						☐	☐
						☐	☐
						☐	☐
						☐	☐

(8) WELL TESTS: Minimum testing time is 1 hour
☐ Pump ☒ Bailer ☐ Air ☐ Flowing Artesian

Yield gal/min	Drawdown	Drill stem at	Time
30	20' dd		1 hr.

Temperature of water 90° Depth Artesian Flow Found
Was a water analysis done? ☐ Yes By whom
Did any strata contain water not suitable for intended use? ☐ Too little
☐ Salty ☐ Muddy ☐ Odor ☐ Colored ☐ Other
Depth of strata:

(9) LOCATION OF WELL by legal description:
County Klamath Latitude Longitude
Township 40S N or S Range 9E E or W. WM.
Section 34 NW 1/4 NE 1/4
Tax Lot 100 Lot Block Subdivision
Street Address of Well (or nearest address)

(10) STATIC WATER LEVEL:
21 ft. below land surface. Date 2/5/98
Artesian pressure lb. per square inch. Date

(11) WATER BEARING ZONES:
Depth at which water was first found

From	To	Estimated Flow Rate	SWL

(12) WELL LOG:
Ground Elevation

Material	From	To	SWL
Retrieve jet pump			
from bottom of			
hole			
Measure into 215'			
Bail and clean to 230'			
Drill			
Gray clay and shle	230	240	
Hard gray shale	240	265	

Date started 9/4/97 Completed 2/5/98

(unbonded) Water Well Constructor Certification:
I certify that the work I performed on the construction, alteration, or abandonment of this well is in compliance with Oregon water supply well construction standards. Materials used and information reported above are true to the best of my knowledge and belief.

WWC Number
Signed Date

(bonded) Water Well Constructor Certification:
I accept responsibility for the construction, alteration, or abandonment work performed on this well during the construction dates reported above. All work performed during this time is in compliance with Oregon water supply well construction standards. This report is true to the best of my knowledge and belief.

WWC Number 1228
Signed Larry G. Delpain Date 2/12/98

ORIGINAL & FIRST COPY-WATER RESOURCES DEPARTMENT SECOND COPY-CONSTRUCTOR THIRD COPY-CUSTOMER

KLAM 14557

NOTICE TO WATER WELL CONTRACTOR.
The original and first copy of this report are to be filed with the STATE ENGINEER, SALEM 10, OREGON within 30 days from the date of well completion.

RECEIVED APR 1 1964 STATE ENGINEER

WATER WELL REPORT
STATE OF OREGON
(Please type or print)

State Well No. 40/9-27J

State Permit No.

(1) OWNER:
Name [redacted]
Address [redacted]
KLAMATH FALLS, ORE.

(2) LOCATION OF WELL:
County KLAMATH Driller's well number 4
NE ¼ SE ¼ Section 27 T. 40S R. 9E W.M.
Bearing and distance from section or subdivision corner

(3) TYPE OF WORK (check):
New Well ☒ Deepening ☐ Reconditioning ☐ Abandon ☐
If abandonment, describe material and procedure in Item 12.

(4) PROPOSED USE (check):
Domestic ☐ Industrial ☐ Municipal ☐
Irrigation ☐ Test Well ☐ Other ☒

(5) TYPE OF WELL:
Rotary ☐ Driven ☐
Cable ☒ Jetted ☐
Dug ☐ Bored ☐

(6) CASING INSTALLED: Threaded ☐ Welded ☒
" Diam. from ft. to ft. Gage
6 5/8" Diam. from +8" to 20 ft. Gage 250
" Diam. from ft. to ft. Gage

(7) PERFORATIONS: Perforated? ☐ Yes ☒ No
Type of perforator used
Size of perforations in. by in.
perforations from ft. to ft.
perforations from ft. to ft.
perforations from ft. to ft.
perforations from ft. to ft.
perforations from ft. to ft.

(8) SCREENS: Well screen installed? ☐ Yes ☒ No
Manufacturer's Name
Type Model No.
Diam. Slot size Set from ft. to ft.
Diam. Slot size Set from ft. to ft.

(9) CONSTRUCTION:
Well seal—Material used in seal CONCRETE
Depth of seal 20 ft. Was a packer used? NO
Diameter of well bore to bottom of seal 12 in.
Were any loose strata cemented off? ☐ Yes ☒ No Depth
Was a drive shoe used? ☒ Yes ☐ No
Was well gravel packed? ☐ Yes ☒ No Size of gravel:
Gravel placed from ft. to ft.
Did any strata contain unusable water? ☐ Yes ☒ No
Type of water? Depth of strata
Method of sealing strata off

(10) WATER LEVELS:
Static level 104 ft. below land surface Date 3/18/64
Artesian pressure lbs. per square inch Date

(11) WELL TESTS: Drawdown is amount water level is lowered below static level
Was a pump test made? ☐ Yes ☒ No If yes, by whom?
Yield: gal./min. with ft. drawdown after hrs.
" " " "
" " " "
Bailer test 15 gal./min. with 16 ft. drawdown after 1 hrs.
Artesian flow g.p.m. Date
Temperature of water 108 Was a chemical analysis made? ☐ Yes ☒ No

(12) WELL LOG: Diameter of well below casing 8
Depth drilled 200 ft. Depth of completed well 200 ft.
Formation: *Describe by color, character, size of material and structure, and show thickness of aquifiers and the kind and nature of the material in each stratum penetrated, with at least one entry for each change of formation.*

MATERIAL	FROM	TO
TOP SOIL	0	4
GRAY CLAY	4	25
YELLOW CLAY	25	95
BLUE CLAY	95	125
GRAY SHALE	125	174
BLUE LAVA BROKEN	174	196
GREEN SHALE	196	200

Work started 3/16 1964 Completed 3/18/64 19
Date well drilling machine moved off of well 3/18/64 19

(13) PUMP:
Manufacturer's Name
Type: H.P.

Water Well Contractor's Certification:
This well was drilled under my jurisdiction and this report is true to the best of my knowledge and belief.
NAME E E STOREY (Person, firm or corporation) (Type or print)
Address 3831 Hope KLAMATH FALLS
Drilling Machine Operator's License No. 115
[Signed] E E Storey (Water Well Contractor)
Contractor's License No. 74 Date 3/25/64 19

(USE ADDITIONAL SHEETS IF NECESSARY)

KLAM 14910

RECEIVED

NOV 29 1988

WATER SUPPLY SALEM, OREGON

4S/9E/2ba

STATE OF OREGON

WATER WELL REPORT

(as required by ORS 537.765)

(START CARD) # 8901

Well Number: _____

(1) OWNER:

Name Klamath Drainage District

Address 280 Main St

City Klamath Falls State Or Zip 97601

(2) TYPE OF WORK:

☐ New Well ☑ Deepen ☐ Recondition ☐ Abandon

(3) DRILL METHOD

☐ Rotary Air ☐ Rotary Mud ☑ Cable

☐ Other _____

(4) PROPOSED USE:

☑ Domestic ☐ Community ☐ Industrial ☐ Irrigation

☐ Thermal ☐ Injection ☐ Other _____

(5) BORE HOLE CONSTRUCTION:

Special Construction approval Yes ☐ No ☑ Depth of Completed Well 640 ft.

Explosives used Yes ☐ No ☑ Type _____ Amount _____

HOLE Diameter	From	To	SEAL Material	From	To	Amount sacks or pounds
6	548	640				

How was seal placed: Method ☐ A ☐ B ☐ C ☐ D ☐ E

☐ Other _____

Backfill placed from _____ ft. to _____ ft. Material _____

Gravel placed from _____ ft. to _____ ft. Size of gravel _____

(6) CASING/LINER:

	Diameter	From	To	Gauge	Steel	Plastic	Welded	Threaded
Casing:					☐	☐	☐	☐
					☐	☐	☐	☐
					☐	☐	☐	☐
					☐	☐	☐	☐
Liner:					☐	☐	☐	☐
					☐	☐	☐	☐

Final location of shoe(s) _____

(7) PERFORATIONS/SCREENS:

☐ Perforations Method _____

☐ Screens Type _____ Material _____

From	To	Slot size	Number	Diameter	Tele/pipe size	Casing	Liner
						☐	☐
						☐	☐
						☐	☐
						☐	☐
						☐	☐
						☐	☐

(8) WELL TESTS: Minimum testing time is 1 hour

☐ Pump ☑ Bailer ☐ Air ☐ Flowing Artesian

Yield gal/min	Drawdown	Drill stem at	Time
30	1'		1 hr

Temperature of water 206 Depth Artesian Flow Found _____

Was a water analysis done? NO ☐ Yes By whom _____

Did any strata contain water not suitable for intended use? ☐ Too little

☐ Salty ☐ Muddy ☐ Odor ☐ Colored ☐ Other _____

Depth of strata: _____

(9) LOCATION OF WELL by legal description:

County Klamath Latitude _____ ' " Longitude _____ ' "

Township 41S N or S, Range 9E E or W, WM.

Section 2 NE ¼ NW ¼

Tax Lot _____ Lot _____ Block _____ Subdivision _____

Street Address of Well (or nearest address) _____

(10) STATIC WATER LEVEL:

49 ft. below land surface. Date 11/16/88

Artesian pressure _____ lb. per square inch. Date _____

(11) WATER BEARING ZONES:

Depth at which water was first found _____

From	To	Estimated Flow Rate	SWL
548	640	30	49

(12) WELL LOG:

Ground elevation _____

Material	From	To	SWL
Gray Clay W Seams Black Sand	548	640	

Date started 11/10/88 Completed 11/16/88

(unbonded) Water Well Constructor Certification:

I certify that the work I performed on the construction, alteration, or abandonment of this well is in compliance with Oregon well construction standards. Materials used and information reported above are true to my best knowledge and belief.

WWC Number _____

Signed _____ Date _____

(bonded) Water Well Constructor Certification:

I accept responsibility for the construction, alteration, or abandonment work performed on this well during the construction dates reported above. all work performed during this time is in compliance with Oregon well construction standards. This report is true to the best of my knowledge and belief.

WWC Number 1228

Signed Larry H. DeSpain Date 11/25/88

ORIGINAL & FIRST COPY - WATER RESOURCES DEPARTMENT SECOND COPY - CONSTRUCTOR THIRD COPY - CUSTOMER 9809C 3/88

NOTICE TO WATER WELL CONTRACTOR
The original and first copy of this report are to be filed with the

STATE ENGINEER, SALEM, OREGON 97310
within 30 days from the date of well completion.

KLAM 1491

WATER WELL REPORT

RECEIVED
MAR 18 1977
WATER RESOURCES DEPT
SALEM, OREGON

STATE OF OREGON
(Please type or print)
(Do not write above this line)

State Well No. 41S/9E-2ab
State Permit No.

(1) OWNER:

Name KLAMATH DRAINAGE DISTRICT
Address 280 MAIN
KLAMATH FALLS, ORE

(2) TYPE OF WORK (check):

New Well ☒ Deepening ☐ Reconditioning ☐ Abandon ☐
If abandonment, describe material and procedure in Item 12.

(3) TYPE OF WELL:

Rotary ☒ Driven ☐
Cable ☐ Jetted ☐
Dug ☐ Bored ☐

(4) PROPOSED USE (check):

Domestic ☒ Industrial ☐ Municipal ☐
Irrigation ☐ Test Well ☐ Other ☒

CASING INSTALLED:

Threaded ☐ Welded ☒

" Diam. from ft. to ft. Gage
6 5/8" Diam. from +1 ft. to 40 ft. Gage 250
" Diam. from ft. to ft. Gage

PERFORATIONS:

Perforated? ☐ Yes ☒ No.
Type of perforator used
Size of perforations in. by in.
perforations from ft. to ft.
perforations from ft. to ft.
perforations from ft. to ft.

(7) SCREENS:

Well screen installed? ☐ Yes ☒ No
Manufacturer's Name
Type Model No.
Diam. Slot size Set from ft. to ft.
Diam. Slot size Set from ft. to ft.

(8) WELL TESTS:

Drawdown is amount water level is lowered below static level

Was a pump test made? ☐ Yes ☒ No If yes, by whom?

Yield: gal./min. with ft. drawdown after hrs.
AIR LIFT 20 GPM @ 120' " 1/2 "
" 50 GPM @ 200' " 1 "

Bailer test gal./min. with ft. drawdown after hrs.

Artesian flow g.p.m.

Temperature of water 50 Depth artesian flow encountered ft.

(9) CONSTRUCTION:

Well seal—Material used BENTONITE
Well sealed from land surface to 40 ft.
Diameter of well bore to bottom of seal 9 7/8 in.
Diameter of well bore below seal in.
Number of sacks of cement used in well seal sacks
Number of sacks of bentonite used in well seal 7 sacks
Brand name of bentonite AQUAGEL
Number of pounds of bentonite per 100 gallons of water lbs./100 gals.
Was a drive shoe used? ☒ Yes ☐ No Plugs Size: location ft.
Did any strata contain unusable water? ☐ Yes ☒ No
Type of water? depth of strata
Method of sealing strata off
Was well gravel packed? ☐ Yes ☒ No Size of gravel:
Gravel placed from ft. to ft.

(10) LOCATION OF WELL:

County KLAMATH Driller's well number
NW ¼ NE ¼ Section 2 T. 41S R. 9E W.M.
Bearing and distance from section or subdivision corner

(11) WATER LEVEL: Completed well.

Depth at which water was first found 524 ft.
Static level 44 ft. below land surface. Date 2/26/77
Artesian pressure lbs. per square inch. Date

(12) WELL LOG:

Diameter of well below casing 6
Depth drilled 545 ft. Depth of completed well 545 ft.

Formation: Describe color, texture, grain size and structure of materials; and show thickness and nature of each stratum and aquifer penetrated, with at least one entry for each change of formation. *Report each change in position of Static Water Level and indicate principal water-bearing strata.*

MATERIAL	From	To	SWL
Packed Brown sand	0	17	
SAND & GRAVEL	17	18	
YELLOW CLAY	18	27	
SANDY BROWN CLAY	27	32	
GRAY SANDSTONE	32	86	
GRAY CLAY	86	128	
GRAY SANDSTONE	128	172	
GRAY CLAY	172	300	
GRAY CLAY HARD STREAKS	300	473	
GRAY CLAY	473	524	
HARD BLACK CHALK ROCK	524	545	WB

Work started 2/25/77 19 Completed 2/26/77 19
Date well drilling machine moved off of well 2/26/77 19

Drilling Machine Operator's Certification:

This well was constructed under my direct supervision. Materials used and information reported above are true to my best knowledge and belief.

[Signed] (Drilling Machine Operator) Date 3/14/77 19
Drilling Machine Operator's License No. 656

Water Well Contractor's Certification:

This well was drilled under my jurisdiction and this report is true to the best of my knowledge and belief.

Name E.E. STOREY & SON WELL DRILLING INC
(Person, firm or corporation) (Type or print)
Address 3847 HOPE KLAMATH FALLS
[Signed] (Water Well Contractor)
Contractor's License No. 601 Date 3/14/77, 19

(USE ADDITIONAL SHEETS IF NECESSARY)

SP*45656-119

NOTICE TO WATER WELL CONTRACTOR
The original and first copy of this report are to be filed with the
WATER RESOURCES DEPARTMENT, SALEM, OREGON 97310 within 30 days from the date of well completion.

Klam 14584

WATER WELL REPORT
STATE OF OREGON
(Please type or print)
(Do not write above this line)

State Well No. 40S/9E-35bc
State Permit No. G-8102

(1) OWNER:
Name [redacted]
Address Lower Klamath Lake, Merrill, Oregon

(2) TYPE OF WORK (check):
New Well ☒ Deepening ☐ Reconditioning ☐ Abandon ☐
If abandonment, describe material and procedure in Item 12.

(3) TYPE OF WELL:
Rotary ☒ Driven ☐
Cable ☐ Jetted ☐
Dug ☐ Bored ☐

(4) PROPOSED USE (check):
Domestic ☐ Industrial ☐ Municipal ☐
Irrigation ☒ Test Well ☐ Other ☐

CASING INSTALLED: Threaded ☐ Welded ☒
" Diam. from 0 ft. to 63 ft. Gage 250
--- " Diam. from --- ft. to -- ft. Gage --
---- " Diam. from --- ft. to --- ft. Gage ---

PERFORATIONS: Perforated? ☐ Yes ☒ No.
Type of perforator used ----------
Size of perforations ----- in. by ---- in. --
----- perforations from ---- ft. to ---- ft.
------ perforations from ------ ft. to ------ ft.
----- perforations from ----- ft. to ----- ft.

(7) SCREENS: Well screen installed? ☐ Yes ☒ No
Manufacturer's Name ----------
Type ---------- Model No. ----
Diam. --- Slot size ---- Set from ---- ft. to --- ft.
Diam. --- Slot size ---- Set from --- ft. to --- ft.

(8) WELL TESTS: Drawdown is amount water level is lowered below static level
Was a pump test made? ☒ Yes ☐ No If yes, by whom? Vally Pump
Yield: 650 gal./min. with 60 ft. drawdown after 4 hrs.
--- " --- " --- "
" ---- " --- " --- "
Bailer test --- gal./min. with --- ft. drawdown after --- hrs.
Artesian flow ---- g.p.m. ---
Temperature of water 164 Depth artesian flow encountered ----- ft.

(9) CONSTRUCTION:
Well seal—Material used Cement
Well sealed from land surface to 63 ft.
Diameter of well bore to bottom of seal 18 in.
Diameter of well bore below seal 14 in.
Number of sacks of cement used in well seal 35 sacks
How was cement grout placed? Poured in.

Was a drive shoe used? ☐ Yes ☒ No Plugs -- Size: location --- ft.
Did any strata contain unusable water? ☐ Yes ☒ No
Type of water? ------ depth of strata ----
Method of sealing strata off ---------
Was well gravel packed? ☐ Yes ☒ No Size of gravel: --------
Gravel placed from ----- ft. to --- ft. --

(10) LOCATION OF WELL:
County Klamath Driller's well number
SW ¼ NW ¼ Section 35 T. 41 R. 9E W.M.
Bearing and distance from section or subdivision corner Approx. 3168 feet North and 660 feet East of the SW Corner of S.35 T41 R9E

(11) WATER LEVEL: Completed well.
Depth at which water was first found 175 ft.
Static level 115 ft. below land surface. Date 4/31/77
Artesian pressure ------- lbs. per square inch. Date -------

(12) WELL LOG: Diameter of well below casing 14
Depth drilled 630 ft. Depth of completed well 630 ft.

Formation: Describe color, texture, grain size and structure of materials; and show thickness and nature of each stratum and aquifer penetrated, with at least one entry for each change of formation. **Report each change in position of Static Water Level and indicate principal water-bearing strata.**

MATERIAL	From	To	SWL
Top soil	0	2	
Hard pan sand stone	2	8	
Yellow chalk	8	20	
Sand and broken sand stone	20	30	
Yellow chalk	30	100	
Blue clay	100	175	
Semi hard grey sand w/ water	175	180	115
Blue grey clay	180	220	
Yellow chalk or clay	220	280	
Grey clay or chalk	280	300	
Blue grey clay or chalk	300	430	
Grey sand and water crystels	430	440	115
Sand stone brown W/ water	440	500	115
Blue grey clay	500	505	
Black lava rock	505	525	115
Blue clay	525	560	
Grey clay	560	590	
Grey rock shells	590	610	115
Semi hard stone & clay W/water	610	630	115

Work started Feb 28 1978 Completed March 30 1978
Date well drilling machine moved off of well March 30 1931

Drilling Machine Operator's Certification:
This well was constructed under my direct supervision. Materials used and information reported above are true to my best knowledge and belief.
[Signed] [signature] Date 4/31, 1978
(Drilling Machine Operator)
Drilling Machine Operator's License No. 201

Water Well Contractor's Certification:
This well was drilled under my jurisdiction and this report is true to the best of my knowledge and belief.
Name Wilson DRilling Contractor Inc.
(Person, firm or corporation) (Type or print)
Address P.O. Box 136, Merrill, Oregon
[Signed] [signature]
(Water Well Contractor)
Contractor's License No. 169 Date 4/31, 1978

(USE ADDITIONAL SHEETS IF NECESSARY)

SP*45656-119

KLAM 14559

RECEIVED NOV 10 1965 STATE ENGINEER SALEM OREGON

OBSERVATION WELL

WATER WELL REPORT
STATE OF OREGON

File Original and First Copy with the STATE ENGINEER, SALEM, OREGON

State Well No. 40/9-27P

State Permit No.

(1) OWNER: [redacted]

Name

Address Midland, Oregon

(2) LOCATION OF WELL:

County Klamath Owner's number, if any—

¼ ¼ Section 27 T. 40S R. 9E W.M.

Bearing and distance from section or subdivision corner LOT 3

(3) TYPE OF WORK (check):

New Well ☒ Deepening ☐ Reconditioning ☐ Abandon ☐

If abandonment, describe material and procedure in Item 11.

(4) PROPOSED USE (check):

Domestic ☐ Industrial ☐ Municipal ☐

Irrigation ☒ Test Well ☐ Other ☐

Stock water

(5) TYPE OF WELL:

Rotary ☐ Driven ☐

Cable ☒ Jetted ☐

Dug ☐ Bored ☐

(6) CASING INSTALLED: Threaded ☐ Welded ☒

" Diam. from ft. to ft. Gage

10 3/4 O.D. Diam. from 0 ft. to 179 ft. Gage .250

" Diam. from ft. to ft. Gage

(7) PERFORATIONS: Perforated? ☐ Yes ☒ No

Type of perforator used

SIZE of perforations in. by in.

perforations from ft. to ft.

perforations from ft. to ft.

perforations from ft. to ft.

perforations from ft. to ft.

perforations from ft. to ft.

(8) SCREENS: Well screen installed ☐ Yes ☒ No

Manufacturer's Name

Type Model No.

Slot size Set from ft. to ft.

Slot size Set from ft. to ft.

(9) CONSTRUCTION:

Was well gravel packed? ☐ Yes ☒ No Size of gravel:

Gravel placed from ft. to ft.

Was a surface seal provided? ☒ Yes ☐ No To what depth? 179 ft.

Material used in seal— Concrete

Did any strata contain unusable water? ☐ Yes ☒ No

Type of water? Depth of strata

Method of sealing strata off

(10) WATER LEVELS:

Static level 32 ft. below land surface Date 11-4-65

Artesian pressure lbs. per square inch Date

Log Accepted by:

[Signed] (Owner) Date , 19

(11) WELL TESTS: Drawdown is amount water level is lowered below static level

Was a pump test made? ☒ Yes ☐ No If yes, by whom? Ken Hartley

Yield: 450 gal./min. with 2 ft. drawdown after 4 hrs.

" " " "

" " " "

Bailer test gal./min. with ft. drawdown after hrs.

Artesian flow g.p.m. Date

Temperature of water 186 Was a chemical analysis made? ☐ Yes ☒ No

(12) WELL LOG: Diameter of well 10" I.D. inches.

Depth drilled 418 ft. Depth of completed well 418 ft.

Formation: *Describe by color, character, size of material and structure, and show thickness of aquifers and the kind and nature of the material in each stratum penetrated, with at least one entry for each change of formation.*

MATERIAL Page 1 of 2 Pages	FROM	TO
Sandy loam	0	4
Yellow shale	4	19
Sand, gravel & boulders	19	21
Yellow shale	21	38
blue shale	38	50
lava boulders & shale	50	53
blue shale	53	126
fine gravel	126	127
gray shale, caving	127	152
gray-blue shale	152	168
sandy blue shale	168	173
blue shale with hard streaks	173	189
lava boulders embedded in blue shale	189	200
lava rock cemented	200	240
brilliant blue shale	240	261
lava rock and blue shale	261	272
gravel	272	273
gray sicky shale	273	285
soft brown sandy clay	285	306
grey blue shale	306	347
hard basalt boulders	347	353
boulders & black sticky clay	353	366
blue basalt rock	366	374
sticky clay	374	375

Work started Sept. 16 1965 Completed Nov. 8 1965

(13) PUMP:

Manufacturer's Name

Type: H.P.

Well Driller's Statement:

This well was drilled under my jurisdiction and this report is true to the best of my knowledge and belief.

NAME Ken Hartley Well Drilling (Person, firm, or corporation) (Type or print)

Address Box 542, Klamath Falls, Oregon

Driller's well number

[Signed] Ken Hartley (Well Driller)

License No. 161 Date Nov. 8, 1965

(USE ADDITIONAL SHEETS IF NECESSARY)

#9 - Sealed from land surface to 60' - per WWC's Sec. 6/24/81 JCB

RECEIVED
JUN 10 1981
WATER RESOURCES DEPT
SALEM, OREGON

WATER WELL REPORT
STATE OF OREGON

State Well No. 40S/9E-22dd (K-14548)

State Permit No.

(1) OWNER:

Name [redacted]

Address [redacted]

City Midland, State OR 97634

(2) TYPE OF WORK (check):

New Well ☒ Deepening ☐ Reconditioning ☐ Abandon ☐

If abandonment, describe material and procedure in Item 12.

(3) TYPE OF WELL:

Rotary Air ☒ Driven ☐
Rotary Mud ☐ Dug ☐
[redacted] ☐ Bored ☐

(4) PROPOSED USE (check):

Domestic ☐ Industrial ☐ Municipal ☐
Irrigation ☒ Test Well ☐ Other ☐
Thermal: Withdrawal ☐ Reinjection ☐

(5) CASING INSTALLED:

Steel ☒ Plastic ☐
Threaded ☐ Welded ☐

8" Diam. from +1 ft. to 174 ft. Gauge .250

" Diam. from ft. to ft. Gauge

LINER INSTALLED:

" Diam. from ft. to ft. Gauge

(6) PERFORATIONS:

Perforated? ☐ Yes ☒ No

Type of perforator used

Size of perforations in. by in.

perforations from ft. to ft.

perforations from ft. to ft.

perforations from ft. to ft.

(7) SCREENS:

Well screen installed? ☐ Yes ☒ No

Manufacturer's Name

Type Model No.

Diam. Slot Size Set from ft. to ft.

Diam. Slot Size Set from ft. to ft.

(8) WELL TESTS:

Drawdown is amount water level is lowered below static level

[redacted] a pump test made? ☐ Yes ☒ No If yes, by whom?

Yield: gal./min. with ft. drawdown after hrs.

Air test-100 GPM w/drill stem @ 275 1 "

Air test 60 gal./min. with drill stem at 250 ft. 1 hrs.

Bailer test gal./min. with ft. drawdown after hrs.

[redacted]esian flow g.p.m.

Temperature of water 124° Depth artesian flow encountered ft.

(9) CONSTRUCTION:

Special standards: Yes ☐ No ☒

Well seal—Material used Cement

Well sealed from land surface to ft.

Diameter of well bore to bottom of seal 12 in.

Diameter of well bore below seal 8 in.

Number of sacks of cement used in well seal 24 - 9 Bentonite sacks

How was cement grout placed? pumped from bottom of casing up to the ground surface.

Was pump installed? No Type HP Depth ft.

Was a drive shoe used? ☐ Yes ☒ No Plugs Size: location ft.

Did any strata contain unusable water? ☐ Yes ☒ No

Type of Water? depth of strata

Method of sealing strata off

Was well gravel packed? ☐ Yes ☒ No Size of gravel:

Gravel placed from ft. to ft.

(10) LOCATION OF WELL:

County Klamath Driller's well number

SE ¼ SE ¼ Section 22 T. 40S R. 9E W.M.

Tax Lot # Lot Blk Subdivision

Address at well location:

(11) WATER LEVEL: Completed well.

Depth at which water was first found 170 ft.

Static level 141 ft. below land surface. Date

Artesian pressure lbs. per square inch. Date

(12) WELL LOG:

Diameter of well below casing 8"

Depth drilled 597 ft. Depth of completed well 597 ft.

Formation: Describe color, texture, grain size and structure of materials; and show thickness and nature of each stratum and aquifer penetrated, with at least one entry for each change of formation. Report each change in position of Static Water Level and indicate principal water-bearing strata.

MATERIAL	From	To	SWL
Top soil and boulders	0	2	
Brown clay and boulders	2	6	
Yellow clay	6	52	
Yellow clay w/streaks of brown claystone	52	116	
Blue clay	116	126	
Blue clay stone	126	160	
Hard blue shale	160	170	
Black rock	170	218	141'
Fractured black rock	218	250	
Black rock	250	293	
Clay mixed w/sandstone	293	296	141'
Black rock broken	296	332	141'
Black rock (hard)	332	597	

Work started 5-1 1981 Completed 5-18 1981

Date well drilling machine moved off of well 5-18- 1981

Drilling Machine Operator's Certification:

This well was constructed under my direct supervision. Materials used and information reported above are true to my best knowledge and belief.

[Signed] Jerry L Maxwell (Drilling Machine Operator) Date 5-22, 1981

Drilling Machine Operator's License No. 1388

Water Well Contractor's Certification:

This well was drilled under my jurisdiction and this report is true to the best of my knowledge and belief.

Name Norm Sevey Well Drilling, Inc. (Person, firm or corporation) (Type or print)

Address 5619 Leland Dr., Klamath Falls, OR 97601

[Signed] Norm Sevey (Water Well Contractor)

Contractor's License No. 408 Date 5-22-, 1981

NOTICE TO WATER WELL CONTRACTOR
The original and first copy of this report are to be filed with the WATER RESOURCES DEPARTMENT, SALEM, OREGON 97310 within 30 days from the date of well completion.

SP*12658-690

WATER WELL REPORT
STATE OF OREGON

Klam 14555

DEC 12 1983

State Well No. 40S/9E-27dd

State Permit No. .....

(1) OWNER:

Name [redacted]

Address Lower Klamath

City Merrill State Oregon

(2) TYPE OF WORK (check):

New Well ☒ Deepening ☐ Reconditioning ☐ Abandon ☐

If abandonment, describe material and procedure in Item 12.

(3) TYPE OF WELL:

Rotary Air ☒ Driven ☐
Rotary Mud ☐ Dug ☐
[redacted] ☐ Bored ☐

(4) PROPOSED USE (check):

Domestic ☒ Industrial ☐ Municipal ☐
Irrigation ☐ Test Well ☐ Other ☐
Thermal: Withdrawal ☐ Reinjection ☐

(5) CASING INSTALLED: Steel ☒ Threaded ☐ Plastic ☐ Welded ☐

8 5/8" Diam. from 0 ft. to 20 ft. Gauge 250

-- " Diam. from --- ft. to --- ft. Gauge ------

[redacted] **LINER INSTALLED:**

--- " Diam. from --- ft. to --- ft. Gauge ---------

(6) PERFORATIONS: Perforated? ☐ Yes ☒ No

Type of perforator used ----------

Size of perforations --- in. by --- in. --

------ perforations from --- ft. to --- ft.

------ perforations from --- ft. to --- ft.

------ perforations from --- ft. to --- ft.

(7) SCREENS: Well screen installed? ☐ Yes ☒ No

Manufacturer's Name ---------

Type ------ Model No. ----

Diam. ----- Slot Size ----- Set from --- ft. to --- ft.

Diam. ----- Slot Size --- Set from --- ft. to --- ft.

(8) WELL TESTS: Drawdown is amount water level is lowered below static level

[redacted] a pump test made? ☐ Yes ☒ No If yes, by whom? ---

Yield: --- gal./min. with --- ft. drawdown after -- hrs.

" ---- " ---- " "

Air test 50 gal./min. with drill stem at 100 ft. 2 hrs.

Bailer test ---- gal./min. with --- ft. drawdown after --- hrs.

[redacted] sian flow --- g.p.m. ---

Temperature of water 160 Depth artesian flow encountered ---- ft.

(9) CONSTRUCTION: Special standards: Yes ☐ No ☒

Well seal—Material used Cement

Well sealed from land surface to 20 ft.

Diameter of well bore to bottom of seal 8 in.

Diameter of well bore below seal 8 in.

Number of sacks of cement used in well seal 8 sacks

How was cement grout placed? Pumped in.

Was pump installed? No Type - HP -- Depth -- ft.

Was a drive shoe used? ☐ Yes ☒ No Plugs -- Size: location -- ft.

Did any strata contain unusable water? ☐ Yes ☒ No

Type of Water? ----- depth of strata --

Method of sealing strata off -----

Was well gravel packed? ☐ Yes ☒ No - Size of gravel: --

Gravel placed from --- ft. to --- ft. --

(10) LOCATION OF WELL:

County Klamath Driller's well number

SE ¼ SE ¼ Section 27 T. 40S R. 9E W.M.

Tax Lot # — Lot — Blk — Subdivision —

Address at well location: Lower Klamath Road Merrill Oregon

(11) WATER LEVEL: Completed well.

Depth at which water was first found 215 ft.

Static level 59 ft. below land surface. Date 9/2/80

Artesian pressure ------ lbs. per square inch. Date ------

(12) WELL LOG: Diameter of well below casing 8

Depth drilled 230 ft. Depth of completed well 230 ft.

Formation: Describe color, texture, grain size and structure of materials; and show thickness and nature of each stratum and aquifer penetrated, with at least one entry for each change of formation. Report each change in position of Static Water Level and indicate principal water-bearing strata.

MATERIAL	From	To	SWL
Top soil	0	2	
Brown clay	2	55	
Yellow chalk or clay	55	58	
Black clay	58	90	
Grey clay	90	100	
Grey shale	100	170	
Green clay	170	205	
Grey lava rock	205	220	59
Grey clay	220	230	

Work started 9-1- 19 80 Completed 9-2 19 80

Date well drilling machine moved off of well 9-3 19 80

Drilling Machine Operator's Certification:

This well was constructed under my direct supervision. Materials used and information reported above are true to my best knowledge and belief.

[Signed] Walter L. Wilson (Drilling Machine Operator) Date 9/2, 19 80

Drilling Machine Operator's License No. 201

Water Well Contractor's Certification:

This well was drilled under my jurisdiction and this report is true to the best of my knowledge and belief.

Name Wilson Drilling Cont Inc (Person, firm or corporation) (Type or print)

Address P. O. Box 136, Merrill, Oregon

[Signed] Walter L. Wilson (Water Well Contractor)

Contractor's License No. 169 Date 9/2, 19 80

NOTICE TO WATER WELL CONTRACTOR
The original and first copy of this report are to be filed with the WATER RESOURCES DEPARTMENT, SALEM, OREGON 97310 within 30 days from the date of well completion.

SP*12658-690

WATER WELL REPORT 12/0am
STATE OF OREGON 14583

RECEIVED
FEB 15 1983
WATER RESOURCES DEPT.
SALEM, OREGON

State Well No. 40S/9E-35 ca
State Permit No. Deepen & Record

(1) OWNER:

Name [redacted]
Address [redacted]
City Merrill State Ore.

(2) TYPE OF WORK (check):

New Well ☐ Deepening ☒ Reconditioning ☒ Abandon ☐
If abandonment, describe material and procedure in Item 12.

(3) TYPE OF WELL:

Rotary Air ☐ Driven ☐
Rotary Mud ☐ Dug ☐
Cable ☒ Bored ☐

(4) PROPOSED USE (check):

Domestic ☐ Industrial ☐ Municipal ☐
Irrigation ☒ Test Well ☐ Other ☐
Thermal: Withdrawal ☐ Reinjection ☐

(5) CASING INSTALLED:

Steel ☒ Plastic ☐
Threaded ☐ Welded ☒
12" Diam. from 180 ft. to 380 ft. Gauge .188
" Diam. from ft. to ft. Gauge

LINER INSTALLED:

12" Diam. from 180 ft. to 380 ft. Gauge .188

(6) PERFORATIONS:

Perforated? ☒ Yes ☐ No
Type of perforator used factory
Size of perforations 1/4 in. by 2½ in.
24 per ft. perforations from 180 ft. to 380 ft.
perforations from ft. to ft.
perforations from ft. to ft.

(7) SCREENS:

Well screen installed? ☐ Yes ☒ No
Manufacturer's Name
Type Model No.
Diam. Slot Size Set from ft. to ft.
Diam. Slot Size Set from ft. to ft.

(8) WELL TESTS:

Drawdown is amount water level is lowered below static level

Was a pump test made? ☐ Yes ☒ No If yes, by whom?
Yield: gal./min. with ft. drawdown after hrs.
" " " "
Air test gal./min. with drill stem at ft. hrs.
Bailer test 80 gal./min. with 5½ ft. drawdown after 1 hrs.
Artesian flow g.p.m.
Temperature of water 163 Depth artesian flow encountered ft.

(9) CONSTRUCTION:

Special standards: Yes ☐ No ☒
Well seal—Material used
Well sealed from land surface to ft.
Diameter of well bore to bottom of seal in.
Diameter of well bore below seal in.
Number of sacks of cement used in well seal sacks
How was cement grout placed?
top casing was set when we moved on.

Was pump installed? no Type HP Depth ft.
Was a drive shoe used? ☐ Yes ☐ No Plugs Size: location ft.
Did any strata contain unusable water? ☐ Yes ☒ No
Type of Water? depth of strata
Method of sealing strata off
Was well gravel packed? ☐ Yes ☒ No Size of gravel:
Gravel placed from ft. to ft.

(10) LOCATION OF WELL:

County Klamath Driller's well number
N.E. ¼ S.W. ¼ Section 35 T. 40S R. 9E. W.M.
Tax Lot # Lot Blk Subdivision
Address at well location:

(11) WATER LEVEL: Completed well.

Depth at which water was first found ---- ft.
Static level 86' 10" ft. below land surface. Date 12/10/82
Artesian pressure lbs. per square inch. Date

(12) WELL LOG:

Diameter of well below casing 16
Depth drilled 925 ft. Depth of completed well 925 ft.

Formation: Describe color, texture, grain size and structure of materials; and show thickness and nature of each stratum and aquifer penetrated, with at least one entry for each change of formation. Report each change in position of Static Water Level and indicate principal water-bearing strata.

MATERIAL	From	To	SWL
gray sticky shale	505	701	86'10"
gray tuff	701	737	"
green clay	737	800	"
gray tuff	800	810	"
broken gray tuff (W. B.)	810	830	"
solid gray tuff	830	838	"
hard blue shale	838	857	"
hard gray slate	857	877	"
hard blue shale	877	925	"

Work started 12/18 19 82 Completed 2/10 19 83
Date well drilling machine moved off of well 2/10 19 83

Drilling Machine Operator's Certification:

This well was constructed under my direct supervision. Materials used and information reported above are true to my best knowledge and belief.
[Signed] George M Bakaji (Drilling Machine Operator) Date 2/12, 19 83
Drilling Machine Operator's License No.

Water Well Contractor's Certification:

This well was drilled under my jurisdiction and this report is true to the best of my knowledge and belief.
Name John A. Van Meter (Person, firm or corporation) (Type or print)
Address P.O. Box 204 Malin, Ore. 97632
[Signed] John A. Van Meter (Water Well Contractor)
Contractor's License No. Date 2/12, 19 83

NOTICE TO WATER WELL CONTRACTOR
The original and first copy of this report are to be filed with the WATER RESOURCES DEPARTMENT, SALEM, OREGON 97310 within 30 days from the date of well completion.

SP*12658-690

WATER WELL REPORT
STATE OF OREGON

Klam 14582

DEC 12 1983

State Well No. 40s/9E-35bb

State Permit No. .....

(1) OWNER:

Name [redacted]er

Address [redacted]

City Merrill State Oregon

(2) TYPE OF WORK (check):

New Well ☒ Deepening ☐ Reconditioning ☐ Abandon ☐

If abandonment, describe material and procedure in Item 12.

(3) TYPE OF WELL:

Rotary Air	☒	Driven	☐
Rotary Mud	☐	Dug	☐
[redacted]	☒	Bored	☐

(4) PROPOSED USE (check):

Domestic	☐	Industrial	☐	Municipal	☐		
Irrigation	☐	Test Well	☐	Other	☐		
Thermal:	☒	Withdrawal	☐	Reinjection	☐		

(5) CASING INSTALLED:

Steel ☒ Plastic ☐
Threaded ☐ Welded ☐

8" Diam. from 0 ft. to 20 ft. Gauge 250

" Diam. from ft. to ft. Gauge

[redacted] LINER INSTALLED:

" Diam. from ft. to ft. Gauge

(6) PERFORATIONS:

Perforated? ☐ Yes ☒ No

Type of perforator used

Size of perforations in. by in.

0 perforations from ft. to ft.

perforations from ft. to ft.

perforations from ft. to ft.

(7) SCREENS:

Well screen installed? ☐ Yes ☒ No

Manufacturer's Name

Type Model No.

Diam. Slot Size Set from ft. to ft.

Diam. Slot Size Set from ft. to ft.

(8) WELL TESTS:

Drawdown is amount water level is lowered below static level

[redacted] a pump test made? ☐ Yes ☒ No If yes, by whom?

[redacted]ield: gal./min. with ft. drawdown after hrs.

" " " "

Air test 300 gal./min. with drill stem at 55 ft. 2 hrs.

Bailer test gal./min. with ft. drawdown after hrs.

[redacted]sian flow g.p.m.

Temperature of water 120 Depth artesian flow encountered ft.

(9) CONSTRUCTION:

Special standards: Yes ☐ No ☒

Well seal—Material used cement

Well sealed from land surface to 20 ft.

Diameter of well bore to bottom of seal 10 in.

Diameter of well bore below seal 10 in.

Number of sacks of cement used in well seal 10 sacks

How was cement grout placed? Pumped in

Was pump installed? no Type HP Depth ft.

Was a drive shoe used? ☐ Yes ☒ No Plugs Size: location ft.

Did any strata contain unusable water? ☐ Yes ☒ No

Type of Water? depth of strata

Method of sealing strata off

Was well gravel packed? ☐ Yes ☒ No Size of gravel:

Gravel placed from ft. to ft.

(10) LOCATION OF WELL:

County Klamath Driller's well number

NW ¼ NW ¼ Section 35 T. 40s R. 9E W.M.

Tax Lot # Lot Blk Subdivision

Address at well location: Lower Klamath Rd Merrill, Oregon

(11) WATER LEVEL: Completed well.

Depth at which water was first found 240 ft.

Static level 150 ft. below land surface. Date 11/1181

Artesian pressure lbs. per square inch. Date

(12) WELL LOG:

Diameter of well below casing 10 inch to 550
8 inch 550 to 600

Depth drilled 600 ft. Depth of completed well 600 ft.

Formation: Describe color, grain size and structure of materials; and show thickness and nature of each stratum and aquifer penetrated, with at least one entry for each change of formation. Report each change in position of Static Water Level and indicate principal water-bearing strata.

MATERIAL	From	To	SWL
Top Soil	0	2	
Brown yellow clay (very hard)	2	8	
Brown sand	8	15	
Yellow chalk or clay	15	90	
Brown clay	90	150	
Grey clay	150	175	
Blue grey clay	175	213	
~~Green~~ Lava rock Brown	213	217	
Green clay	217	229	
Brown lava rock	229	231	
Brown shale	231	240	150
Brown clay	240	295	
Grey shale	295	320	
Brown shale	320	321	150
Dark brown lava rock	321	360	
Grey lava	360	485	
Blue black lava	485	500	
Grey lava rck	500	580	
Grey ~~lava~~ clay	580	584	
Broken lava (all cutting left)	584	600	150

Work started Sept 18 19 81 Completed 11/11 19 81

Date well drilling machine moved off of well 11/11 1981

Drilling Machine Operator's Certification:

This well was constructed under my direct supervision. Materials used and information reported above are true to my best knowledge and belief.

[Signed] Walter L Wilson (Drilling Machine Operator) Date 11/11, 19 81

Drilling Machine Operator's License No. 201

Water Well Contractor's Certification:

This well was drilled under my jurisdiction and this report is true to the best of my knowledge and belief.

Name WILSON DRILLING CONTRACTOR INC. (Person, firm or corporation) (Type or print)

Address P.O. Box 136, Merrill, Oregon

[Signed] Walter L Wilson (Water Well Contractor)

Contractor's License No. 169 Date 11/11, 19 81

NOTICE TO WATER WELL CONTRACTOR
The original and first copy of this report are to be filed with the WATER RESOURCES DEPARTMENT, SALEM, OREGON 97310 within 30 days from the date of well completion.

SP*12658-690

Nevada Division of Water Resources

Well Log Database

Query Results

Type of Site: N

Sequence No.: 4984

Log No.: 24270

Permit No.:

Basin: 087

Notice of Intent#: 2001

Owner: [redacted]

Mailing/Well Address: 2600 GREENSBORO RENO NV 89509

Location SE SE **Sec:** 27 **Twn:** 19N **Rng:** 19E **Ref:** MD **State/Co. Code:** 3203

Waiver No: **Parcel No.:** **Lot No.:** **Block No.:**

Type of Work: G **Proposed Use:** H **Drilling Method** R **Subdiv. Name:**

Source Agency: NV003

Depth to Bedrock:

Construction Data Quality: G

Lithologic Data Quality: G

Aquifer Type:

Date Started:

Date Complete: 11/29/1982

Yield G.P.M.

Draw Down: **After Hours Pump:**

Pumping Water Level:

Specific Capacity:

Test Method:

Work Type Remarks:

General Remarks:

Additional Remarks:

Well Construction

Hole Depth: 1128 **feet**

Surface Casing Diameter: 8.62 **inches**

Cased To: 1128 **feet**

Casing Reductions: 1

Perforations:

From 908 **feet to** 1128 **feet**

Perforation Length:

Perforation Intervals: 2

Depth of Seal: 507 **feet**

Gravel Packed: N

from 0 **feet to** 0 **feet**

Static Water Level: 189 **ft below LSD**

Water Temperature: 120º **F**

Contractor Name: AQUA DRILLING & WELL SERVI

Contractor License Number: 15291

Address: 2255 GLENDALE SPARKS NV 89431

Contractor's Drlr No.:

Driller Lic.No.: 1132

Code Definitions

Nevada Division of Water Resources

Well Log Database

Query Results

Type of Site: N

Sequence No.: 5563

Log No.: 24413

Permit No.:

Basin: 087

Notice of Intent#:

Owner: [redacted]

Mailing/Well Address: 2690 MONTEREY CR RENO NV

Location NE NE **Sec:** 27 **Twn:** 19N **Rng:** 19E **Ref:** MD **State/Co. Code:** 3203

Waiver No: **Parcel No.:** 019-281-18 **Lot No.:** 1 **Block No.:**

Type of Work: G **Proposed Use:** H **Drilling Method** C **Subdiv. Name:** COR

Source Agency: NV003

Depth to Bedrock:

Construction Data Quality: G

Lithologic Data Quality: G

Aquifer Type:

Date Started:

Date Complete: 2/12/1983

Yield 15 **G.P.M.**

Draw Down: 18 **After Hours Pump:** 24

Pumping Water Level:

Specific Capacity:

Test Method: P

Work Type Remarks:

General Remarks: LOT NO. 1 UNIT 4

Additional Remarks:

Well Construction

Hole Depth: 750 **feet**

Surface Casing Diameter: 8 **inches**

Cased To: 750 **feet**

Casing Reductions: 0

Perforations:

From 708 **feet to** 748 **feet**

Perforation Length:

Perforation Intervals: 1

Depth of Seal: 75 **feet**

Gravel Packed: N

from 0 **feet to** 0 **feet**

Static Water Level: 90 **ft below LSD**

Water Temperature: 158º **F**

Contractor Name: MCKAY DRILLING INC

Contractor License Number: 14170

Address: 2290 PIONEER DR RENO NV 89509

Contractor's Drlr No.:

Driller Lic.No.: 1274

Code Definitions

Nevada Division of Water Resources

Well Log Database

Query Results

Type of Site: N

Sequence No.: 4976

Log No.: 24082

Permit No.:

Basin: 087

Notice of Intent#:

Owner: [redacted]

Mailing/Well Address: 4000 PLUMAS RENO NV

Location SE NE **Sec:** 26 **Twn:** 19N **Rng:** 19E **Ref:** MD **State/Co. Code:** 3203

Waiver No: **Parcel No.:** **Lot No.:** **Block No.:**

Type of Work: G **Proposed Use:** H **Drilling Method** C **Subdiv. Name:** FREY

Source Agency: NV003

Depth to Bedrock:

Construction Data Quality: G

Lithologic Data Quality: G

Aquifer Type:

Date Started:

Date Complete: 8/10/1982

Yield 15 **G.P.M.**

Draw Down: 25 **After Hours Pump:** 4

Pumping Water Level:

Specific Capacity:

Test Method: P

Work Type Remarks:

General Remarks:

Additional Remarks:

Well Construction

Hole Depth: 415 **feet**

Surface Casing Diameter: 8 **inches**

Cased To: 415 **feet**

Casing Reductions: 0

Perforations:

From 373 **feet to** 415 **feet**

Perforation Length:

Perforation Intervals: 1

Depth of Seal: 65 **feet**

Gravel Packed: N

from 0 **feet to** 0 **feet**

Static Water Level: 40 **ft below LSD**

Water Temperature: 190º **F**

Contractor Name: MCKAY DRILLING INC

Contractor License Number: 14170

Address: 2290 PIONEER DR RENO NV 89509

Contractor's Drlr No.:

Driller Lic.No.: 1274

Code Definitions

Nevada Division of Water Resources

Well Log Database

Query Results

Type of Site: N

Sequence No.: 2237

Log No.: 27388

Permit No.:

Basin: 087

Notice of Intent#:

Owner: [redacted]

Mailing/Well Address: 4745 RIO PINAR RENO NV

Location SW NE **Sec:** 26 **Twn:** 19N **Rng:** 19E **Ref:** MD **State/Co. Code:** 3203

Waiver No: **Parcel No.:** **Lot No.:** **Block No.:**

Type of Work: N **Proposed Use:** Z **Drilling Method** C **Subdiv. Name:**

Source Agency: NV003

Depth to Bedrock:

Construction Data Quality: G

Lithologic Data Quality: G

Aquifer Type:

Date Started:

Date Complete: 12/28/1985

Yield 30 **G.P.M.**

Draw Down: 18 **After Hours Pump:** 24

Pumping Water Level:

Specific Capacity:

Test Method: P

Work Type Remarks:

General Remarks: PROP USE=HOT WATER

Additional Remarks:

Well Construction

Hole Depth: 315 **feet**

Surface Casing Diameter: 8 **inches**

Cased To: 315 **feet**

Casing Reductions: 1

Perforations:

From 160 **feet to** 190 **feet**

Perforation Length:

Perforation Intervals: 1

Depth of Seal: 65 **feet**

Gravel Packed: N

from 0 **feet to** 0 **feet**

Static Water Level: 50 **ft below LSD**

Water Temperature: 178º **F**

Contractor Name: MCKAY DRILLING INC

Contractor License Number: 14170

Address: 2290 PIONEER DR RENO NV 89509

Contractor's Drlr No.: 514

Driller Lic.No.: 786

Code Definitions

Nevada Division of Water Resources

Well Log Database

Query Results

Type of Site: N

Sequence No.: 516

Log No.: 25079

Permit No.:

Basin: 087

Notice of Intent#: 2647

Owner: [redacted]

Mailing/Well Address:

Location NW SW **Sec:** 25 **Twn:** 19N **Rng:** 19E **Ref:** MD **State/Co. Code:** 3203

Waiver No: **Parcel No.:** **Lot No.:** **Block No.:**

Type of Work: N **Proposed Use:** Z **Drilling Method** C **Subdiv. Name:**

Source Agency: NV003

Depth to Bedrock:

Construction Data Quality:

Lithologic Data Quality:

Aquifer Type:

Date Started:

Date Complete: 12/19/1983

Yield 30 **G.P.M.**

Draw Down: 10 **After Hours Pump:** 12

Pumping Water Level:

Specific Capacity:

Test Method: P

Work Type Remarks:

General Remarks: PROP USE=HOT WATER

Additional Remarks:

Well Construction

Hole Depth: 360 **feet**

Surface Casing Diameter: 12 **inches**

Cased To: 360 **feet**

Casing Reductions: 1

Perforations:

From feet to feet

Perforation Length:

Perforation Intervals: 0

Depth of Seal: feet

Gravel Packed: N

from 0 **feet to** 0 **feet**

Static Water Level: 40 **ft below LSD**

Water Temperature: º F

Contractor Name: EDMUND MILLER

Contractor License Number: 12272

Address:

Contractor's Drlr No.: 718

Driller Lic.No.: 718

Code Definitions

Nevada Division of Water Resources

Well Log Database

Query Results

Type of Site: N

Sequence No.: 2977

Log No.: 24689

Permit No.:

Basin: 087

Notice of Intent#: 1880

Owner: [redacted]

Mailing/Well Address: 4005 GARLAND RENO NV

Location SE NW **Sec:** 25 **Twn:** 19N **Rng:** 19E **Ref:** MD **State/Co. Code:** 3203

Waiver No: **Parcel No.:** **Lot No.:** **Block No.:**

Type of Work: N **Proposed Use:** Z **Drilling Method** R **Subdiv. Name:**

Source Agency: NV003

Depth to Bedrock:

Construction Data Quality: F

Lithologic Data Quality: F

Aquifer Type:

Date Started:

Date Complete: 6/5/1983

Yield 30 **G.P.M.**

Draw Down: 10 **After Hours Pump:** 48

Pumping Water Level:

Specific Capacity:

Test Method: P

Work Type Remarks:

General Remarks: PROP USE=HEAT

Additional Remarks:

Well Construction

Hole Depth: 300 **feet**

Surface Casing Diameter: 4 **inches**

Cased To: 300 **feet**

Casing Reductions: 0

Perforations:

From 260 **feet to** 300 **feet**

Perforation Length:

Perforation Intervals: 1

Depth of Seal: feet

Gravel Packed: Y

from 0 **feet to** 0 **feet**

Static Water Level: ft below LSD

Water Temperature: 123º **F**

Contractor Name: BRINKERHOFF DRILLING CO

Contractor License Number: 12265B

Address: 2270 EAST LAKE BLVD

Contractor's Drlr No.:

Driller Lic.No.: 1161

Code Definitions

Nevada Division of Water Resources

Well Log Database

Query Results

Type of Site: N

Sequence No.: 2976

Log No.: 24688

Permit No.:

Basin: 087

Notice of Intent#: 2179

Owner: [redacted]

Mailing/Well Address: 4002 BLUEGRASS CT RENO NV

Location SE NW **Sec:** 25 **Twn:** 19N **Rng:** 19E **Ref:** MD **State/Co. Code:** 3203

Waiver No: **Parcel No.:** **Lot No.:** 73 **Block No.:**

Type of Work: N **Proposed Use:** Z **Drilling Method** R **Subdiv. Name:** WILI BROOK II

Source Agency: NV003

Depth to Bedrock:

Construction Data Quality: G

Lithologic Data Quality: G

Aquifer Type:

Date Started:

Date Complete: 6/29/1983

Yield 30 **G.P.M.**

Draw Down: 2 **After Hours Pump:** 48

Pumping Water Level:

Specific Capacity:

Test Method: P

Work Type Remarks:

General Remarks: PROP USE=HEAT

Additional Remarks:

Well Construction

Hole Depth: 300 **feet**

Surface Casing Diameter: 4 **inches**

Cased To: 300 **feet**

Casing Reductions: 0

Perforations:

From 260 **feet to** 300 **feet**

Perforation Length:

Perforation Intervals: 1

Depth of Seal: 60 **feet**

Gravel Packed: Y

from 0 **feet to** 0 **feet**

Static Water Level: 30 **ft below LSD**

Water Temperature: 120º **F**

Contractor Name: AMERICAN DRILLING

Contractor License Number: 20578

Address: P O BOX 18214 RENO NV 89511

Contractor's Drlr No.:

Driller Lic.No.: 1161

Code Definitions

Nevada Division of Water Resources

Well Log Database

Query Results

Type of Site: N

Sequence No.: 4978

Log No.: 24353

Permit No.:

Basin: 087

Notice of Intent#:

Owner: [redacted]

Mailing/Well Address: 3750 LAKESIDE RENO NV

Location NW NW **Sec:** 25 **Twn:** 19N **Rng:** 19E **Ref:** MD **State/Co. Code:** 3203

Waiver No: **Parcel No.:** **Lot No.:** 24 & 25 **Block No.:**

Type of Work: G **Proposed Use:** H **Drilling Method** R **Subdiv. Name:** KNO ACRES

Source Agency: NV003

Depth to Bedrock:

Construction Data Quality: G

Lithologic Data Quality: G

Aquifer Type:

Date Started:

Date Complete: 11/30/1982

Yield G.P.M.

Draw Down: **After Hours Pump:**

Pumping Water Level:

Specific Capacity:

Test Method:

Work Type Remarks:

General Remarks:

Additional Remarks:

Well Construction

Hole Depth: 453 **feet**

Surface Casing Diameter: 8.62 **inches**

Cased To: 453 **feet**

Casing Reductions: 1

Perforations:

From 400 **feet to** 453 **feet**

Perforation Length:

Perforation Intervals: 1

Depth of Seal: 400 **feet**

Gravel Packed: N

from 0 **feet to** 0 **feet**

Static Water Level: 25 **ft below LSD**

Water Temperature: 178º **F**

Contractor Name: PAUL WILLIAMS & SONS

Contractor License Number: 14483

Address: 22 S PATTERSON SPARKS NV

Contractor's Drlr No.: 957

Driller Lic.No.: 957

Code Definitions

Nevada Division of Water Resources

Well Log Database

Query Results

Type of Site: N

Sequence No.: 519

Log No.: 25637

Permit No.:

Basin: 087

Notice of Intent#:

Owner: [redacted]

Mailing/Well Address:

Location NE SE **Sec:** 25 **Twn:** 19N **Rng:** 19E **Ref:** MD **State/Co. Code:** 3203

Waiver No: **Parcel No.:** **Lot No.:** **Block No.:**

Type of Work: G **Proposed Use:** Z **Drilling Method** C **Subdiv. Name:**

Source Agency: NV003

Depth to Bedrock:

Construction Data Quality:

Lithologic Data Quality:

Aquifer Type:

Date Started:

Date Complete: 7/19/1984

Yield G.P.M.

Draw Down: **After Hours Pump:**

Pumping Water Level:

Specific Capacity:

Test Method:

Work Type Remarks:

General Remarks:

Additional Remarks:

Well Construction

Hole Depth: 300 **feet**

Surface Casing Diameter: 8 **inches**

Cased To: 300 **feet**

Casing Reductions: 0

Perforations:

From 280 **feet to** 300 **feet**

Perforation Length:

Perforation Intervals: 1

Depth of Seal: 60 **feet**

Gravel Packed: N

from 0 **feet to** 0 **feet**

Static Water Level: 30 **ft below LSD**

Water Temperature: º F

Contractor Name: MCKAY DRILLING INC

Contractor License Number: 14170

Address: 2290 PIONEER DR RENO NV 89509

Contractor's Drlr No.: 514

Driller Lic.No.: 786

Code Definitions

Nevada Division of Water Resources

Well Log Database

Query Results

Type of Site: N

Sequence No.: 515

Log No.: 25481

Permit No.:

Basin: 087

Notice of Intent#: 1885

Owner: [redacted]

Mailing/Well Address:

Location NW **Sec:** 25 **Twn:** 19N **Rng:** 19E **Ref:** MD **State/Co. Code:** 3203

Waiver No: **Parcel No.:** **Lot No.:** **Block No.:**

Type of Work: G **Proposed Use:** Z **Drilling Method** R **Subdiv. Name:**

Source Agency: NV003

Depth to Bedrock:

Construction Data Quality:

Lithologic Data Quality:

Aquifer Type:

Date Started:

Date Complete: 8/13/1983

Yield 30 **G.P.M.**

Draw Down: 40 **After Hours Pump:** 10

Pumping Water Level:

Specific Capacity:

Test Method: P

Work Type Remarks:

General Remarks:

Additional Remarks: LOC.4055 WARREN WAY RENO

Well Construction

Hole Depth: 235 **feet**

Surface Casing Diameter: 4.5 **inches**

Cased To: 235 **feet**

Casing Reductions: 0

Perforations:

From 200 **feet to** 235 **feet**

Perforation Length:

Perforation Intervals: 1

Depth of Seal: 80 **feet**

Gravel Packed: Y

from 0 **feet to** 0 **feet**

Static Water Level: 30 **ft below LSD**

Water Temperature: **° F**

Contractor Name: AMERICAN DRILLING

Contractor License Number: 20578

Address:

Contractor's Drlr No.: 1168

Driller Lic.No.: 730

Code Definitions

Nevada Division of Water Resources

Well Log Database

Query Results

Type of Site: N

Sequence No.: 512

Log No.: 25564

Permit No.:

Basin: 087

Notice of Intent#: 2860

Owner: [redacted]

Mailing/Well Address:

Location NE NE **Sec:** 25 **Twn:** 19N **Rng:** 19E **Ref:** MD **State/Co. Code:** 3203

Waiver No: **Parcel No.:** **Lot No.:** **Block No.:**

Type of Work: G **Proposed Use:** Z **Drilling Method** C **Subdiv. Name:**

Source Agency: NV003

Depth to Bedrock:

Construction Data Quality:

Lithologic Data Quality:

Aquifer Type:

Date Started:

Date Complete: 6/28/1984

Yield 30 **G.P.M.**

Draw Down: 20 **After Hours Pump:** 16

Pumping Water Level:

Specific Capacity:

Test Method: P

Work Type Remarks:

General Remarks:

Additional Remarks: LOC.3670 WARREN WAY RENO

Well Construction

Hole Depth: 525 **feet**

Surface Casing Diameter: 8 **inches**

Cased To: 525 **feet**

Casing Reductions: 0

Perforations:

From 505 **feet to** 525 **feet**

Perforation Length:

Perforation Intervals: 1

Depth of Seal: 50 **feet**

Gravel Packed:

from 0 **feet to** 0 **feet**

Static Water Level: 35 **ft below LSD**

Water Temperature: ° F

Contractor Name: MCKAY DRILLING INC

Contractor License Number: 14170

Address: 2290 PIONEER DR RENO NV 89509

Contractor's Drlr No.: 514

Driller Lic.No.: 786

Code Definitions

Nevada Division of Water Resources

Well Log Database

Query Results

Type of Site: N

Sequence No.: 7853

Log No.: 32191

Permit No.:

Basin: 087

Notice of Intent#: 11803

Owner: [redacted]

Mailing/Well Address: 2707 S VIRGINIA RENO NV 89502

Location NE SW **Sec:** 24 **Twn:** 19N **Rng:** 19E **Ref:** MD **State/Co. Code:** 3203

Waiver No: **Parcel No.:** **Lot No.:** **Block No.:**

Type of Work: G **Proposed Use:** Z **Drilling Method** R **Subdiv. Name:**

Source Agency: NV003

Depth to Bedrock:

Construction Data Quality: G

Lithologic Data Quality: G

Aquifer Type:

Date Started:

Date Complete: 8/13/1989

Yield 200 **G.P.M.**

Draw Down: **After Hours Pump:**

Pumping Water Level:

Specific Capacity:

Test Method:

Work Type Remarks:

General Remarks: WELL HAS CEMENT SEAL OF 1225 FT

Additional Remarks: PROPOSED USE OF WELL IS GEOTHERMAL

Well Construction

Hole Depth: 3307 **feet**

Surface Casing Diameter: 8.62 **inches**

Cased To: 3307 **feet**

Casing Reductions: 1

Perforations:

From feet to feet

Perforation Length:

Perforation Intervals: 0

Depth of Seal: feet

Gravel Packed: N

from 0 **feet to** 0 **feet**

Static Water Level: ft below LSD

Water Temperature: 160º **F**

Contractor Name: BLAIN WELL DRILLING

Contractor License Number: 10950

Address: 2537 LARRY CIR CARSON CITY NV

Contractor's Drlr No.:

Driller Lic.No.: 957

Code Definitions

Nevada Division of Water Resources

Well Log Database

Query Results

Type of Site: N

Sequence No.: 4982

Log No.: 24228

Permit No.: 45541

Basin: 087

Notice of Intent#: 1335

Owner: [redacted]

Mailing/Well Address: LAKESIDE DR RENO NV

Location NE SE **Sec:** 26 **Twn:** 19N **Rng:** 19E **Ref:** MD **State/Co. Code:** 3203

Waiver No: **Parcel No.:** **Lot No.:** **Block No.:**

Type of Work: G **Proposed Use:** Z **Drilling Method** R **Subdiv. Name:**

Source Agency: NV003

Depth to Bedrock:

Construction Data Quality: G

Lithologic Data Quality: G

Aquifer Type:

Date Started:

Date Complete: 10/2/1982

Yield G.P.M.

Draw Down: **After Hours Pump:**

Pumping Water Level:

Specific Capacity:

Test Method:

Work Type Remarks:

General Remarks: PROP USE=GEOTHERMAL

Additional Remarks: WELL HAS SEAL -DEPTH UNKNOWN

Well Construction

Hole Depth: 350 **feet**

Surface Casing Diameter: 8.62 **inches**

Cased To: 350 **feet**

Casing Reductions: 1

Perforations:

From 260 **feet to** 330 **feet**

Perforation Length:

Perforation Intervals: 1

Depth of Seal: feet

Gravel Packed: N

from 0 **feet to** 0 **feet**

Static Water Level: 22 **ft below LSD**

Water Temperature: 138º **F**

Contractor Name: AQUA DRILLING & WELL SERV

Contractor License Number: 15291

Address: 2255 GLENDALE SPARKS NV 89431

Contractor's Drlr No.: 1132

Driller Lic.No.: 817

Code Definitions

Nevada Division of Water Resources

Well Log Database

Query Results

Type of Site: N

Sequence No.: 3650

Log No.: 25028

Permit No.:

Basin: 049

Notice of Intent#: 139

Owner:[redacted]

Mailing/Well Address: WEST BULLION RD ELKO NV

Location NE **Sec:** 28 **Twn:** 34N **Rng:** 55E **Ref:** MD **State/Co. Code:** 3200

Waiver No: **Parcel No.:** 06-094-58-6 **Lot No.:** **Block No.:**

Type of Work: N **Proposed Use:** H **Drilling Method** U **Subdiv. Name:**

Source Agency: NV003

Depth to Bedrock:

Construction Data Quality: F

Lithologic Data Quality: F

Aquifer Type:

Date Started:

Date Complete: 10/25/1983

Yield G.P.M.

Draw Down: **After Hours Pump:**

Pumping Water Level:

Specific Capacity:

Test Method:

Work Type Remarks:

General Remarks:

Additional Remarks:

Well Construction

Hole Depth: 280 **feet**

Surface Casing Diameter: 6 **inches**

Cased To: 280 **feet**

Casing Reductions: 0

Perforations:

From 240 **feet to** 280 **feet**

Perforation Length:

Perforation Intervals: 1

Depth of Seal: 50 **feet**

Gravel Packed: Y

from 0 **feet to** 0 **feet**

Static Water Level: 82 **ft below LSD**

Water Temperature: º F

Contractor Name: A-1 WESTERN DRILLING

Contractor License Number: 15356

Address: P O BOX 651 MTN HOME ID 83647

Contractor's Drlr No.: 1072

Driller Lic.No.: 1072

Code Definitions

Nevada Division of Water Resources

Well Log Database

Query Results

Type of Site: N

Sequence No.: 4162

Log No.: 23884

Permit No.: 43564

Basin: 049

Notice of Intent#:

Owner: [redacted]

Mailing/Well Address: ELKO NV

Location NE NE **Sec:** 28 **Twn:** 34N **Rng:** 55E **Ref:** MD **State/Co. Code:** 3200

Waiver No: **Parcel No.:** **Lot No.:** **Block No.:**

Type of Work: G **Proposed Use:** Z **Drilling Method** R **Subdiv. Name:**

Source Agency: NV003

Depth to Bedrock:

Construction Data Quality: G

Lithologic Data Quality: G

Aquifer Type:

Date Started:

Date Complete: 6/21/1982

Yield G.P.M.

Draw Down: **After Hours Pump:**

Pumping Water Level:

Specific Capacity:

Test Method:

Work Type Remarks:

General Remarks: PROP USE=GEOTHERMAL

Additional Remarks:

Well Construction

Hole Depth: 217 **feet**

Surface Casing Diameter: 8 **inches**

Cased To: 217 **feet**

Casing Reductions: 1

Perforations:

From 197 **feet to** 217 **feet**

Perforation Length:

Perforation Intervals: 1

Depth of Seal: 53 **feet**

Gravel Packed: Y

from 0 **feet to** 0 **feet**

Static Water Level: 59 **ft below LSD**

Water Temperature: 180º **F**

Contractor Name: B B GAILEY

Contractor License Number: 15356

Address: STAR RT B BOX 19I MTN HOME ID

Contractor's Drlr No.:

Driller Lic.No.: 1299

Code Definitions

Nevada Division of Water Resources

Well Log Database

Query Results

Type of Site: N

Sequence No.: 5055

Log No.: 23900

Permit No.: 41448

Basin: 049

Notice of Intent#: 2133

Owner:[redacted]

Mailing/Well Address: 1751 COLLEGE ELKO NV 89801

Location SE NE **Sec:** 21 **Twn:** 34N **Rng:** 55E **Ref:** MD **State/Co. Code:** 3200

Waiver No: **Parcel No.:** **Lot No.:** **Block No.:**

Type of Work: G **Proposed Use:** Z **Drilling Method** C **Subdiv. Name:**

Source Agency: NV003

Depth to Bedrock:

Construction Data Quality: G

Lithologic Data Quality: G

Aquifer Type:

Date Started:

Date Complete: 7/1/1982

Yield G.P.M.

Draw Down: **After Hours Pump:**

Pumping Water Level:

Specific Capacity:

Test Method:

Work Type Remarks:

General Remarks: PROP USE=GEOTHERMAL

Additional Remarks: DRILL METHOD IS ALSO ROTARY

Well Construction

Hole Depth: 385 **feet**

Surface Casing Diameter: 7 **inches**

Cased To: 302 **feet**

Casing Reductions: 1

Perforations:

From 200 **feet to** 300 **feet**

Perforation Length:

Perforation Intervals: 3

Depth of Seal: 200 **feet**

Gravel Packed: N

from 0 **feet to** 0 **feet**

Static Water Level: ft below LSD

Water Temperature: 168º **F**

Contractor Name: MUTH DRILLING CO

Contractor License Number: 10819

Address: 203 PINE ST ELKO NV 89801

Contractor's Drlr No.: 922

Driller Lic.No.: 632

Code Definitions

Nevada Division of Water Resources

Well Log Database

Query Results

Type of Site: N

Sequence No.: 6292

Log No.: 30649

Permit No.: 49234

Basin: 049

Notice of Intent#: 10482

Owner: [redacted]

Mailing/Well Address: 369 RAILROAD ELKO NV 89801

Location SW NE **Sec:** 11 **Twn:** 34N **Rng:** 55E **Ref:** MD **State/Co. Code:** 3200

Waiver No: **Parcel No.:** **Lot No.:** **Block No.:**

Type of Work: G **Proposed Use:** X **Drilling Method** R **Subdiv. Name:**

Source Agency: NV003

Depth to Bedrock:

Construction Data Quality: N

Lithologic Data Quality: G

Aquifer Type:

Date Started:

Date Complete: 9/6/1988

Yield G.P.M.

Draw Down: **After Hours Pump:**

Pumping Water Level:

Specific Capacity:

Test Method:

Work Type Remarks:

General Remarks: PROPOSED USE OF WELL IS TEST

Additional Remarks: NOT ABANDONED-PENDING MORE DEVELOPMENT

Well Construction

Hole Depth: 2050 **feet**

Surface Casing Diameter: inches

Cased To: feet

Casing Reductions: 0

Perforations:

From feet to feet

Perforation Length:

Perforation Intervals: 0

Depth of Seal: feet

Gravel Packed: N

from 0 **feet to** 0 **feet**

Static Water Level: ft below LSD

Water Temperature: º F

Contractor Name: THOMPSON DRILLING CO INC

Contractor License Number: 4286A

Address: 4185 W HARMON LV NV 89103

Contractor's Drlr No.: 290

Driller Lic.No.: 1489

Code Definitions

Code Definitions

Site Type

E	Existing (deepen)
N	New
P	Proprietary-new
Y	Proprietary-existing

Drilling Method

A	Air rotary
B	Bored or augered
C	Cable tool
D	Dug
H	Hydraulic Rotary-Mud
J	Jetted
P	Air percussion
R	Reverse rotary
T	Trenching
U	Unknown
V	Driven
W	Drive and wash
Z	Other (explain in remarks)

Work Type

D	Deepen
G	Geothermal
N	New
O	Other (explain in remarks)
P	Plug or abandonment
R	Recondition
S	Replacement Well
T	Test

Proposed Use

A	Air conditioning	AC
B	Bottling	BOT
C	Commercial	COM
D	Dewater	DWR
E	Power	PWR
F	Fire	FIR
G	Monitoring Well	MON
H	Domestic	DOM
I	Irrigation	IRR
J	Industrial-Cooling	IND
K	Mining	MM
M	Medicinal	MED
N	Industrial	IND
P	Public Supply - Municipal	MUN
Q	Aquaculture	AQC
R	Recreation	REC
S	Stock	STK
T	Institution	INS
U	Unused	UNU
X	Test Well	TST
Y	Desalination	DES
Z	Other (explain in remarks)	OTH

Test Method

A	Air Lift
B	Bucket
C	Centrifugal Pump
J	Jet Pump
P	Piston Pump
R	Rotary
S	Submergible Pump
T	Turbine
U	Unknown
Z	Other (explain in remarks)

New Query

Spreadsheets

Presvalue.xls
http://geoheat.oit.edu/pdf/spread/presvalue.xls

Presvalue.wb2
http://geoheat.oit.edu/pdf/spread/presvalue.wb2