CHAPTER 16
INDUSTRIAL APPLICATIONS

Paul J. Lienau and John W. Lund
OIT Geo-Heat Center
Klamath Falls, OR 97603

16.1 INTRODUCTION

Geothermal energy may be used in a number of ways in the industrial field. Potential applications could include drying, process heating, evaporation, distillation, washing, desalination, and chemical extraction.

The most important energy considerations for an industrial complex are the cost, quality, and reliability. Geothermal energy may be attractive to an industry providing: (a) the cost of energy/lb of product is lower than that presently used, (b) the quality of geothermal energy is as good or better than the present supply, and (c) the reliability of geothermal energy is available for the life of the plant. Reliability and availability can only be proven by long-term use or testing.

In some situations where available geothermal fluid temperatures are lower than those required by the industrial application, the temperatures can be raised by means of integrating thermal systems (boilers, upgrading systems, heat pumps, etc.). In designing geothermal energy recovery and utilization systems, alternate possibilities could be considered for various applications. The usual approach for utilization of geothermal fluid by proposed industries is to fit the industry to the available fluids. An alternate approach is to fit the available fluids to proposed industries. This alternate approach requires developing ways to economically upgrade the quality of existing geothermal fluids or the fluids derived from them. Figure 16.1 shows application temperature ranges for some industrial and agricultural applications.

While there are many potential industrial uses of geothermal energy, the number of worldwide applications is relatively small. However, a fairly wide range of uses are represented, including heap leaching of precious metals, vegetable dehydration, grain and lumber drying, pulp and paper processing, diatomaceous earth processing, fish processing and drying, chemical recovery, and waste water treatment. See Steingrimsson, et al. (1992) for a special issue of Geothermics on industrial uses. Industrial applications largely require the use of steam, or superheated water, while agricultural users may use lower temperature geothermal fluids. The largest industrial applications are a pulp, paper, and wood processing plant in New Zealand, a diatomaceous earth plant in Iceland and vegetable dehydration plants in the United States. These systems provide the best present example of industrial geothermal energy use.

16.1.1 Pulp, Paper, and Wood Processing

The site for the integrated newsprint, pulp and timber mills of the Tasman Pulp and Paper Company Ltd., located in Kawerau, New Zealand, is the largest industrial development to utilize geothermal energy. The plant site was selected because of the availability of geothermal energy. Geothermal exploration at Kawerau started in 1952 with the main purpose of locating and developing the geothermal resource for use in a projected pulp and paper mill. The mill produces approximately 200,000 tons of kraft pulp and 400,000 tons of newsprint each year (Carter and Hotson, 1992; Hotson, 1995).

In 1995, the Tasman Pulp and Paper Company was using a total flow of 0.60 million lb/hr from six wells to supply steam at two pressures, 200 and 100 psi. The geothermal steam, which is generated by separate flash plants in the bore field, is used:

1. For directly operating log kickers in the wood room, for timber drying for shatter sprays, and for combustion air heaters in the recovery boilers.

2. To generate clean steam in shell-and-tube boilers for use in the paper making equipment. Clean steam is necessary as the small percentage of noncondensible gases in the geothermal steam can cause intolerable temperature fluctuations in paper-making equipment. These heat exchangers are the most important users of geothermal steam at Tasman.

3. For a 10 MW turbo-alternator installed in 1960, designed to exhaust to atmosphere. In 1968, a single effect evaporator was installed to use exhaust steam to provide additional black liquor evaporation capacity.

Geothermal supplies approximately 26% of the total process steam requirement and up to 6% of the electricity demand at Tasman.

16.1.2 Diatomite Plant

The production of diatomaceous earth at Namafjall, Iceland, utilizing geothermal energy, is an important development for geothermal energy because it serves as an example of the way in which cheap geothermal energy can make a process economic when, with conventional energy resources, the process could not be justified. The

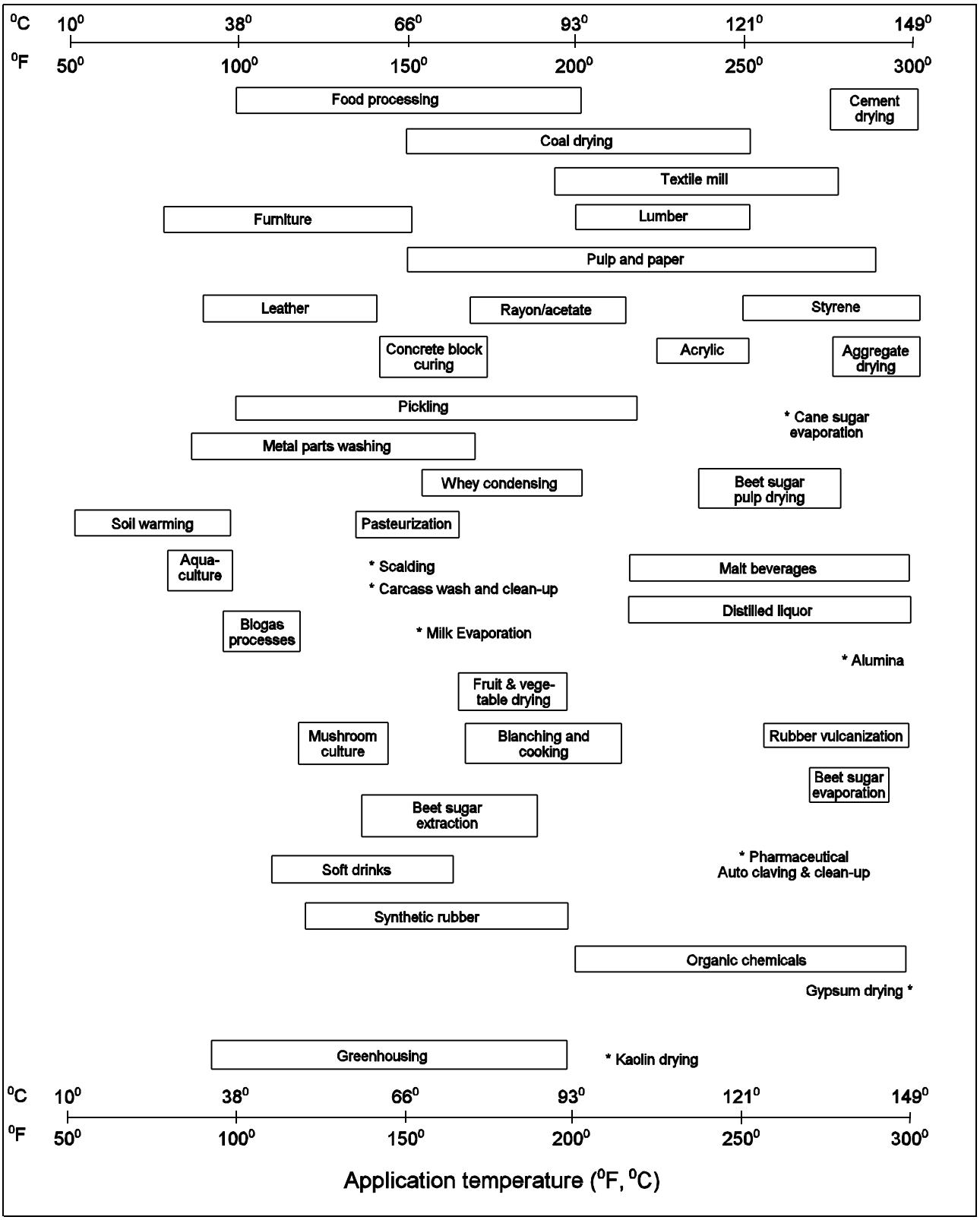

Figure 16.1 Application temperature range for some industrial processes and agricultural applications.

diatomaceous earth is dredged from the bottom of Lake Myvatn by a suction dredger, and the diatomaceous slurry is transmitted by pumping through a 2 miles pipeline to the plant site. Up to 50 ton/h of steam at 361°F/147 psig may be transmitted from bore holes 1,970 ft away. The capacity of this plant was 28,100 tons diatomite filter air in 1995 (Ragnarsson, 1996).

Steam is used to keep the reservoirs containing settled diatomaceous earth ice-free and in the dryer, which is a rotary steam tube type. Of steam, approximately 30 ton/h are used for the dryer. Approximately 6 tons of dry diatomite is produced per hour. The diatomite's moisture content is reduced from 88 to 89% to 2 to 6% in the process (Sigurdsson, 1992).

16.1.3 Vegetable Dehydration

Geothermal Food Processors, a subsidiary of Gilroy Foods, located at Brady Hot Springs near Fernley, Nevada is mainly involved in onion drying. They produce different grades of dried onion; from powdered form up to various size granules. The final product has moisture content of 3.5 to 5%. Geothermal fluid is used for heating requirements at the plant. The plant operates 6 mo/y; from May to November during the harvest season. It has been operating since 1978 and there have been no major equipment failures (Lund, 1994).

Geothermal fluid is pumped from the well at a rate of 750 gpm at 310°F/190 psig and, at this condition, the vapor pressure is 64 psig. The system is pressurized to almost three times the vapor pressure to make sure that the geothermal fluid is always in its liquid state. Operating the plant at elevated pressure prevents serious formation of scale inside the hot water coils and the pipeline. The discharge temperature is 108°F and has a pressure of 40 psig.

The moisture content of the onions is initially 50% and after going through three stages and a desiccator the final product has a moisture content of approximately 5%. The product is dried in a 190 ft long, Proctor & Schwartz, continuous conveyor food dehydrator. The drying is accomplished by passing geothermally heated air through a perforated stainless steel belt. The geothermal heat is transferred into the drying air by 10 steel tube hot water heating coils.

A second new onion and garlic processing plant was dedicated in 1994 by Integrated Ingredients, a division of Burns Philp Food, Inc. The plant, a single-line continuous conveyor dehydrator, is located in the San Emido Desert just south of Gerlach and about 100 miles north of Reno, Nevada. A total of 14 million pounds of dry product are produced annually; 60% onion and 40% garlic. Up to 900 gpm of the 266°F geothermal fluids are delivered to the plant providing 45 million Btu/hr (Lund and Lienau, 1994).

A 1-MWt pilot crop drying facility using 320°F geothermal waters has been built near the Palinipion I geothermal field in Southern Negros in the Philippines. Both cabinet dryers and drying trenches are used to dehydrate coconut meat, fruits, root crops, spices and aquatic products. The plant, covering 7000 ft2 is designed to handle about 7 tons/day of dry copra (coconut meat) (Chua and Abito, 1994).

The advantages of using a geothermal heating system include: (a) elimination of fire hazards, (b) no contamination or discoloration of the product because there are no products of combustion in the air stream, and (c) elimination of conventional fuels.

16.1.4 Other Industrial Uses

The oldest known use of geothermal energy for industrial applications occurred in Italy. In circa 1500 B.C. the Etruscans used geothermal energy in the Tuscany region not only for therapeutic purposes, but also for the exploitation of the salt products deposited near the edges of the lagoni (fumaroles). Traces of boric salts have been found in the glaze of Etruscan plates and crockery, a fact testifying to how these people, many centuries before Christ, had already developed a high degree of artistry and technology in the grinding and chemical treatment of the borates, and also in the proportioning of these products with the other substances that composed their fine pottery.

In 1812, the first attempts were made to extract boric acid from boiling mineral springs scattered over a large area between Volterra and the mining center of Massa Marrittima. This boric acid was produced by evaporation of boric solutions in iron cauldrons with crystallization in wooden barrels. Brick domes were built over the natural outlets of steam, forcing the steam through an orifice to feed the evaporation boilers. Francesco Larderel was founder of the boric acid industry and in 1846 the area was named Larderello in his honor. With an increase in production, growth in trade, and refinement of the process, a wide range of boron and ammonium compounds were produced in the early 1900s. This process continued until World War II; after the war, the plant was put into operation again and continues to this day, using imported ores, to produce boric acid with approximately 30 ton of steam/h.

In New Zealand, at Broadlands, a cooperative of 12 farms dried alfalfa (lucerne) originally using 363°F steam in a large forced air heat exchanger. The drier is a fixed bed, double pass drier, discharging into a hammer mill and pellet press for the final product. The plant produces 1 ton of compressed pellets/hr from 5 ton of fresh alfalfa.

They now produce 3,000 tons/yr of "De-Hi" a dried product from the fiberous part of the plant, and 200 tons/yr of "LPC" a high protein concentrate produced from the extracted juices (Pirrit and Dunstall, 1995).

In Japan, geothermal energy is used for drying timber by Yuzawa Geothermal Drying Co., Ltd on the island of Honshu. The drying facility consists of a vacuum dryer, bark boiler and a forced air unit. The plant utilizes approximately 95,000 lb/hr of 208°F hot water.

In China, low temperature (118 to 174°F) geothermal water is used mainly for washing in wool mills and for dyeing cloth in Tianjin, Beijing, Fengshun of Guandong Province and Xiangyne of Liaoning Province. The Jiannan gas field of Hubei Province has for many years produced chemicals from geothermal brines. Besides a yearly production of 10,000 tons of table salt, the wells yield 0.5 tons of iodine, 18.8 tons of bromine, 40 tons of boron, 5.8 tons of aluminum carbonate, and 480 tons of 6% ammonia water and other trace elements for use in industry.

In the U.S., heap leaching in a gold mining operation in Nevada is a recent new use of geothermal fluids. Tube and shell heat exchangers are used to heat cyanide solutions in heap leaching operation. Geothermal fluids are also used as make up water. Table 16.1 lists most of the known geothermal industrial applications through out the world.

Fish farming and processing is undertaken at several sites in Iceland. A total of nine concerns use geothermal energy to produce dried fish products. Seaweed is also dried at Reykholar in western Iceland (Lindal, 1995; Georgsson and Friedleifsson, 1996)

The use of waste silica precipitated from geothermal brine is being investigated for commercial production in Mexico and New Zealand. In Mexico, low-specific gravity bricks and roofing tiles have been constructed of a silica-cement and silica-lime mixture. These bricks could be used in low-cost housing as an insulation material (Lund and Boyd, 1996). Silica has also been used as a road surfacing material when stabilized with cement at various locations in the Imperial Valley. At Kawerau, New Zealand, a process is being developed to extract silica from the bore water to be used in place of imported calcined clay as a filler in the production of newsprint (Hotson, 1995). Pure silica is also being extracted from waters at Wairakei, New Zealand to be used by the pharmaceutical industry.

16.2 UPGRADING AVAILABLE GEOTHERMAL ENERGY (Hornburg and Lindal, 1978)

The energy that is available initially from a geothermal well is heat, usually in the form of hot water or wet steam. In the case of agricultural related industries, such as drying vegetables, blanching, washing, etc., hot water (>200°F) can be used. The higher level heat should first be extracted and a cascading use can then be accomplished to maximize energy utilization. Other industries, such as pulp and paper, kiln drying of lumber, chemical, etc., probably will require steam at varying pressures. In most cases, the heat can be extracted for process use by the following means:

1. Geothermal fluid to process fluid heat exchange.
2. Convert to steam for process heating.
3. Convert to steam for electricity generation or shaft power.
4. Convert to a secondary fluid vapor (freon, isobutane, etc.) for electricity generation, and shaft power or process heating.

Each of these means to transport heat can have some application in specific processes. In practice, the process or the plant equipment limits the application of most of these methods because of the characteristics of the geothermal fluid. Because steam is the universal process heating media, we will concentrate on designing systems to supply process steam at needed pressures by way of compression. This accomplishes an upgrading of the available energy. The object is to broaden the spectrum of potential user industries and the quality of geothermal heat used in each process.

Upgrading systems could include: (a) flashing, then heating by way of fossil fuels, (b) heating the geothermal fluid by way of fossil fuels followed by flashing, and (c) mechanical compression. The first two of these use fossil fuels and do not increase the amount of heat extracted from the geothermal brine.

Mechanical compression, although being capital cost intensive, is higher in effective use of the high grade energy to upgrade the low grade heat and pressure. The system concept is analogous to a heat pump that extracts low temperature ambient heat and raises its temperature to a useful level by way of mechanical work. Although most (approximately 98%) of the mechanical work is converted back to pressure and temperature energy, it is essential to minimize the quantity needed because it is a high grade and expensive form of energy.

For example, consider a geothermal well producing 250°F fluid, which is delivered to a flash vessel producing 25 psia saturated steam and specific industrial processes require 25, 75, and 135 psia steam. These are the most common steam pressures for most industrial processes.

Various types of compressors could be used, such as centrifugal, axial, rotary screw, and reciprocating. Factors to be considered in selecting the type of compressor are: flow rate, pressure, temperature limitations, method of sealing, method of lubrication, power consumption, serviceability, and cost. Four major categories of drives could be considered, including electric motors, engines (diesel and gas turbine), steam turbines, and hydrocarbon or fluorocarbon turbine. A system using a turbine operating on a hydrocarbon or fluoro-carbon fluid offers the advantage of being able to extract further low grade heat from the geothermal fluid and convert this to mechanical power for compression.

Table 16.1 Industrial Applications of Geothermal Energy

Application	Country	Description	Production Steam or Water Flow Rate	Associated Power (MW)
Wood and Paper Industry				
Pulp & paper	New Zealand Kawerau	Processing and a small amount of electric power generation. Kraft process used. Geothermal energy delivered to mills by 0.60 million lb/hr of 200 and 100 psig steam, which are obtained by flashing the wet steam at a central flash plant (Wilson, 1974; Carter and Hotson, 1992; Hotson, 1995).	245 ton/h of wet steam 529°F reservoir temp.	100 to 125
Timber drying	Japan Yuzawa	The facility consists of a vacuum dryer and a bark boiler (Horii, 1985).	47.6 ton/h hot water with 200°F inlet & 176°F outlet temp.	1.0
Timber drying	Taiwan Tatun	The capacity of the kiln is 1,400 ft^3 and can produce 8,500 ft^3 of kiln dried lumber/month (Chin, 1976).	0.5 ton/h 140°F in kiln	
Mining				
Diatomaceous earth plant	Iceland Namafjall	Production of 28,000 tonys/yr dried diatomaceous earth recovered by wet mining techniques. Dredging of Lake Myvatn is done only in the summer while plant runs throughout the year (Ragnarsson, 1996).	24 ton/h of steam at 356°F	16
Heap leaching	USA Nevada	Two gold mining operations use geothermal fluids in heat exchangers to heat cyanide solutions (Trexler, et al., 1990).	1,100 gpm of hot water at 180 To 240°F	17.5
Chemicals				
Salt plant	Iceland	Recrystallizing of coarse salt into five grain mineral salt used in bathing (Saga Salt). It previously produced 8,000 tons/yr of salt for the fish Processing industry (Kristjansson, 1992; Ragnarsson, 1996).	356°F @ 145 psi	25
Boric acid	Italy Larderello	Geothermal steam used for processing imported ore (Lindal, 1973).	30 ton/h of steam	15 to 19
Waste water	USA - San Bernardino, California	Sludge digester heating (Racine, 1981).	155 gpm of hot water at 145°F	0.5
Agriculture Product Drying				
Vegetable	USA Brady Hot Springs, Nevada	Geothermal Food Processors produce dried onions using hot water coils from a 85 to 5% moisture content using a continuous through-circulation conveyor dryer. Production rate is 10,000 lb/h of fresh onions, resulting in 1,800 lb/h of dried product for 6 mo/yr (Lund, 1994).	500 gpm of hot water at 325°F	6
	USA San Emidio Desert, Nevada	Integrated Ingredients produce dried onions and garlic. Production rate is 14 millions lbs. Per year (Lund and Lienau, 1994).	900 gpm 266°F	14

Alfalfa drying	New Zealand Broadlands	Taupo Lucerne limited (NZ) uses geothermal steam and hot water as the heat source for the drying of alfalfa (lucerne) into "De-HI", produced from the fibrous part of the plant, and "LPC" (lucerne protein concentrate) which is a high-protein Product produced from extracted juice. It produces 3,000 tons/yr of dried De-Hi and 200 tons/yr of LPC. In addition, 35,000 cubic feet of dried fence posts, Poles and swan timber products are produced per month (Pirrit and Dunstall, 1995).	40 ton/h of steam at 347°F	12
Mushroom growing	USA Vale, Oregon	Oregon Trail Mushrooms produces 2,500 ton of white button mushrooms annually. Geothermal fluids are used for soil composting and space heating and cooling (Rutten, 1987).	275 gpm of hot water at 235°F	4.0

Centrifugal machines are built with characteristics that cover a range of likely applications for most industries. They are built for dry steam compression but can handle some liquid in the inlet if it was properly atomized and distributed. In a multi-stage machine, liquid could be injected between stages, thus reducing the total amount of liquid injected in any single stage. The centrifugal compressor, with de-superheating between each stage or between a number of stages appears most appropriate to supply process steam for large industrial users. These could efficiently compress steam in a flow range from 50,000 to 200,000 lb/h with single units. For those applications where under 50,000 lb/h is required, it would be more economical and technically correct to use another type of compressor with a wet vapor at the inlet.

The compression of the steam from a flash vessel or steam generator to the desired process steam conditions can be directed along several paths. These are as follows:

1. Compression of a two-phase wet mixture of appropriate quality to final conditions.

2. Compression of dry saturated steam to final pressure with final temperature obtained by de-superheating.

3. Multi-effect compression with de-superheating between effects.

These paths are shown in Figure 16.2. Path 1 is for wet compression and results in the highest equivalent thermodynamic efficiency. Problems develop in trying to compress wet steam because most of the compressors made are designed for handling only dry steam. The exception to this is the rotary screw compressor. Path 2 would require the greatest amount of shaft work and, hence, is the least desirable. Path 3 represents de-superheating between compressor effects that may be comprised of a number of stages and is most suitable for the centrifugal compressor.

Figure 16.3 shows the basic system for upgrading a geothermal fluid for various industrial process pressures. Incorporated in this system is a flash vessel for the production of steam, a compressor driven by an isobutane turbine, an isobutane condenser, and a heat exchanger to heat and evaporate the condensed isobutane using the geothermal fluid. The compressor work required should be such that the total geothermal fluid needed to produce the required flash steam is equal to the amount of hot liquid needed (at the temperature after flashing) to produce the work required by the isobutane turbine for compression. This type of design results in the minimum total fluid to produce process steam. However, with lower temperature geothermal wells (<275°F), the resulting pressure of the isobutane vapor is low. This requires high isobutane mass flow rates and increased costs of the turbine drive system. In these cases, it may be more economical for some, or all, of the geothermal fluid for the isobutane heater/ boiler to come directly from the wells. Also, different working fluids should be investigated depending on the geothermal fluid temperature. In any case, a technical and economic analysis will be necessary to determine the optimum design and benefits of an upgrading system for specific geothermal resource temperatures and industrial applications.

16.3 SELECTED INDUSTRIAL APPLICATIONS

Pulp and paper mills, lumber drying, drying crops and vegetables, food processing, heap leaching, waste water treatment, and other industries have been extensively studied in regard to the use of geothermal energy. Examples of applications of these industries are presented below to show designs of using the geothermal energy and to indicate in an approximate manner how it might be used in other processes. Greater detail can be found in referenced final reports.

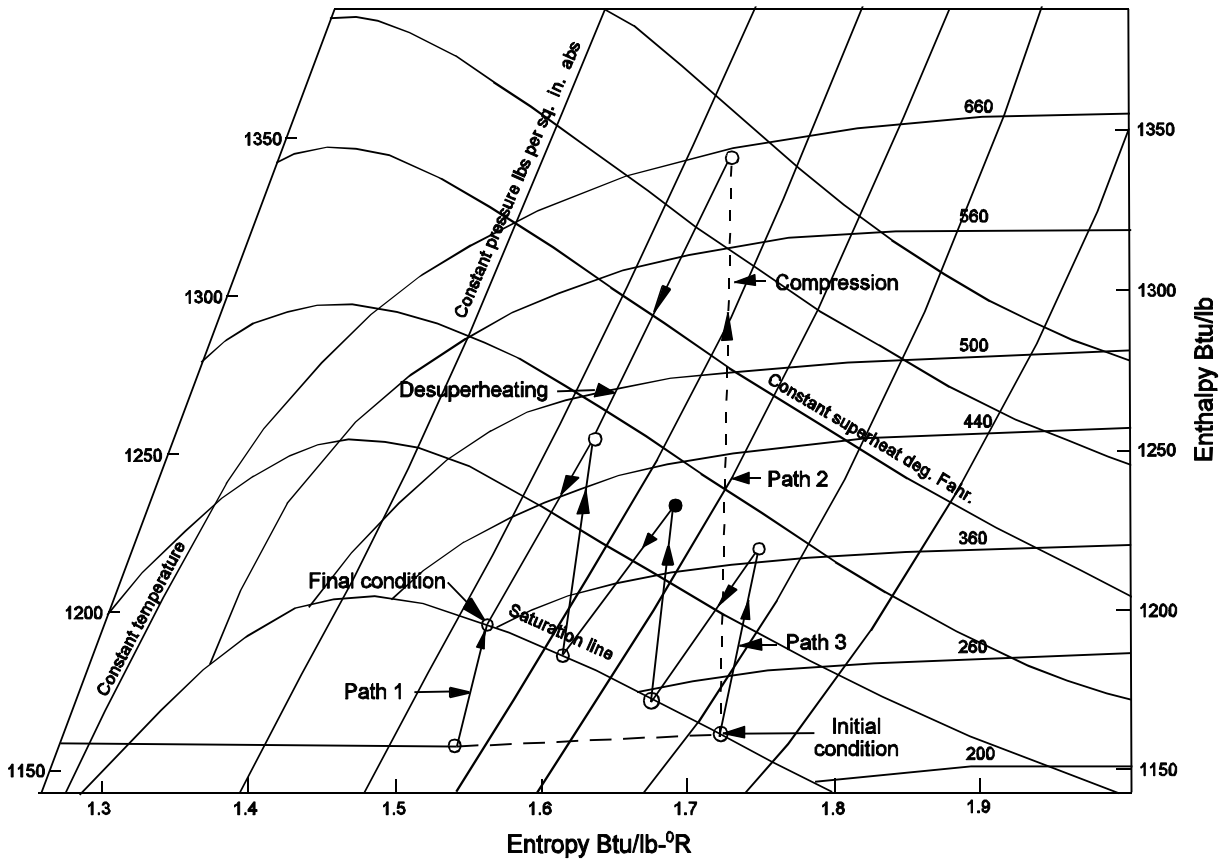

Figure 16.2 Alternate steam compression cycles.

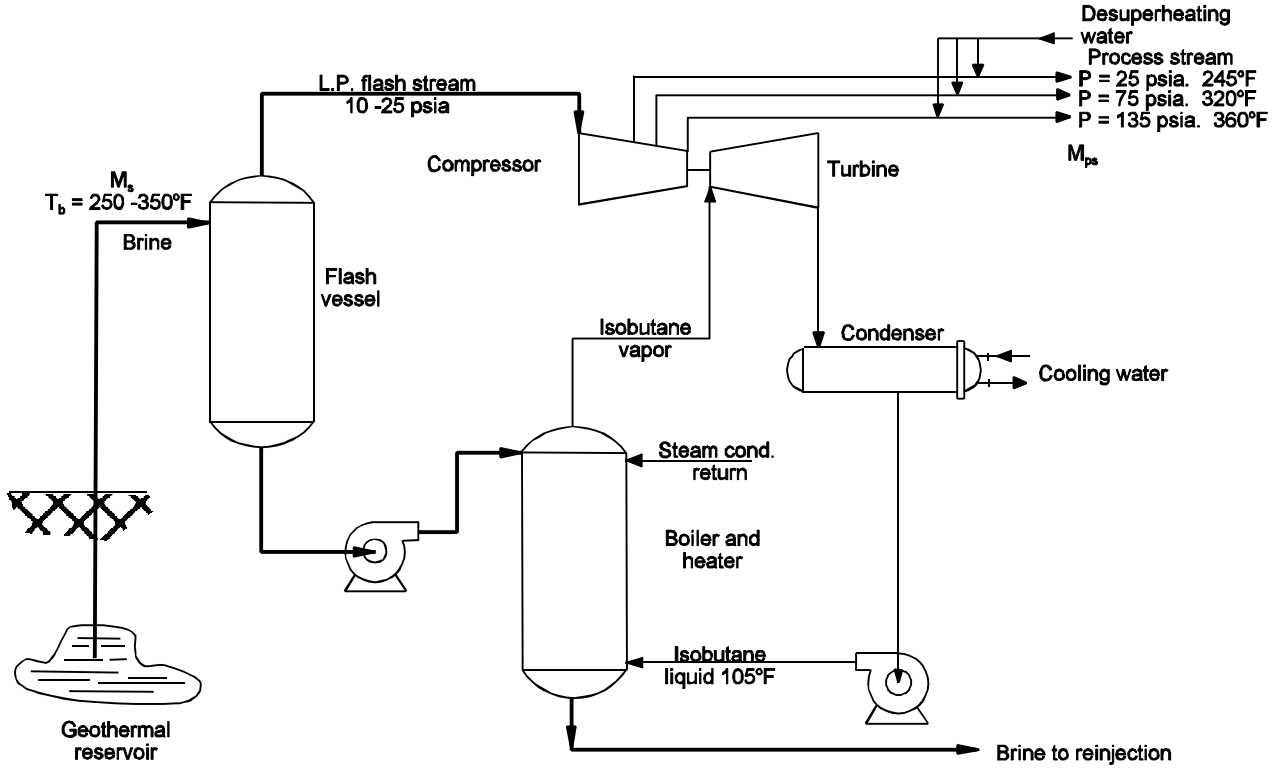

Figure 16.3 Basic system for upgrading geothermal fluids.

17.3.1 Pulp and Paper Mill (Hornburg and Lindal, 1978)

Process flow diagram for a typical bleached pulp and paper mill is shown in Figure 16.4. The pulp process utilized is the Kraft, or sulfate method.

This typical plant has all motor drives for pumps and other driven equipment powered by steam. Steam for the process is normally generated in liquor recovery boilers, bark fed power boilers and oil or gas fired boilers.

The wood to be pulped is first debarked in the barker. The bark is used as fuel to produce process steam. Once debarked, the wood is chipped to specified chip size, which aids in packing chips in the digester. The correct ratio of chips to liquor must be maintained between 2.5 and 3.5 lb liquor/lb of wood.

The cooking liquor contains essentially sodium sulfide and caustic soda. The liquor, as it is received from the recovery system, is too concentrated for proper digesting results; therefore, it has to be diluted. The dilution is accomplished using the weak black liquor to keep water additions to a minimum.

The digester charge is then heated either by the addition of live steam to the bottom of the digester or indirectly with steam. The time required for cooking the wood varies, depending on the end use of the pulp. The maximum cooking temperature is between 335 and 347°F (steam pressure is 95 and 115 psig, respectively).

At the completion of the cook, the pressure within the digester is allowed to decrease to approximately 80 psig. The pulp is then expelled by opening a quick opening valve at the bottom of the digester. The pulp then flows to the flash tank. The flash tank is arranged with a special vapor outlet. Heat is sometimes recovered from this vapor

The pulp is then screened to remove small pieces of uncooked wood. Following screening, the pulp is washed to remove the cooking liquors. It is economically important to remove as much of the liquor as possible. The pulp washing is carried out in rotary vacuum washers. This process is so efficient that between 98 and 99% of the cooking chemicals are washed from the pulp. Hot water is used for washing. The pulp leaving the washer is of relatively high consistency.

The weak black liquor washed from the pulp is first concentrated in multiple effect evaporators and then further concentrated in direct contact evaporators. New chemical makeup is added and the strong liquor burned to remove dissolved organic material. The smelt is then dissolved and caustirized to form white cooking liquor.

The bleaching of pulp is carried out in from one to five or more stages. The basic steps in the bleaching process are:

1. Mix the chemicals in the proper ratios with the pulp.
2. Raise the pulp temperature to the required level.
3. Maintain the mix at this temperature for a specified period.
4. Wash residual chemicals from the pulp.

Chlorine dioxide is almost always used as the bleaching chemical. The procedure is to treat the pulp with chlorine dioxide followed by neutralization with calcium hypochlorite. This process represents the optimum for most kraft pulp bleaching.

Before actual paper manufacture on a paper machine, the pulp stock must be prepared. Beaters and refiners are normally used to accomplish this task. The purpose of beating and refining is to change the physical form of the fibers in the pulp. The process is related to grinding. It is carried out in a number of different ways depending on the fibers desired. The overall objective is to maximize bonding strength.

Paper is made by depositing a dilute water suspension of pulp on a fine screen, which permits the water to drain through but which retains the fiber layer. This layer is then removed from the screen, pressed, and dried.

Most of the process heat requirements are in the range of 250 to 350°F and the heating is accomplished by way of steam in shell and tube heat exchangers. In a conventional system the energy needs are met by generating steam at 450 psia (700°F in a black liquor recovery boiler, a bark boiler, and a conventional fossil-fuel fired boiler). Most of this steam is passed through a back pressure/extraction turbine to generate electricity and pass-out steam at 25 psia that is utilized in the process.

Geothermal fluids could partly accomplish water heating and heating of air for paper drying as shown in Figure 16.4. Two wash water heaters used, one using geothermal fluid at 213°F and the other using steam at 25 psia to heat the water to the final temperature of 210°F. Also, an air dryer is used to preheat the air in the drying section. This section would also be designed to use steam at 25 psia in lieu of 135 psia as is usually the case. Other changes include use of 75 psia steam in lieu of 135 psia steam for black liquor heating and miscellaneous high pressure requirements. Table 16.2 compares the process steam requirements of a conventional system to one using a geothermal upgraded system.

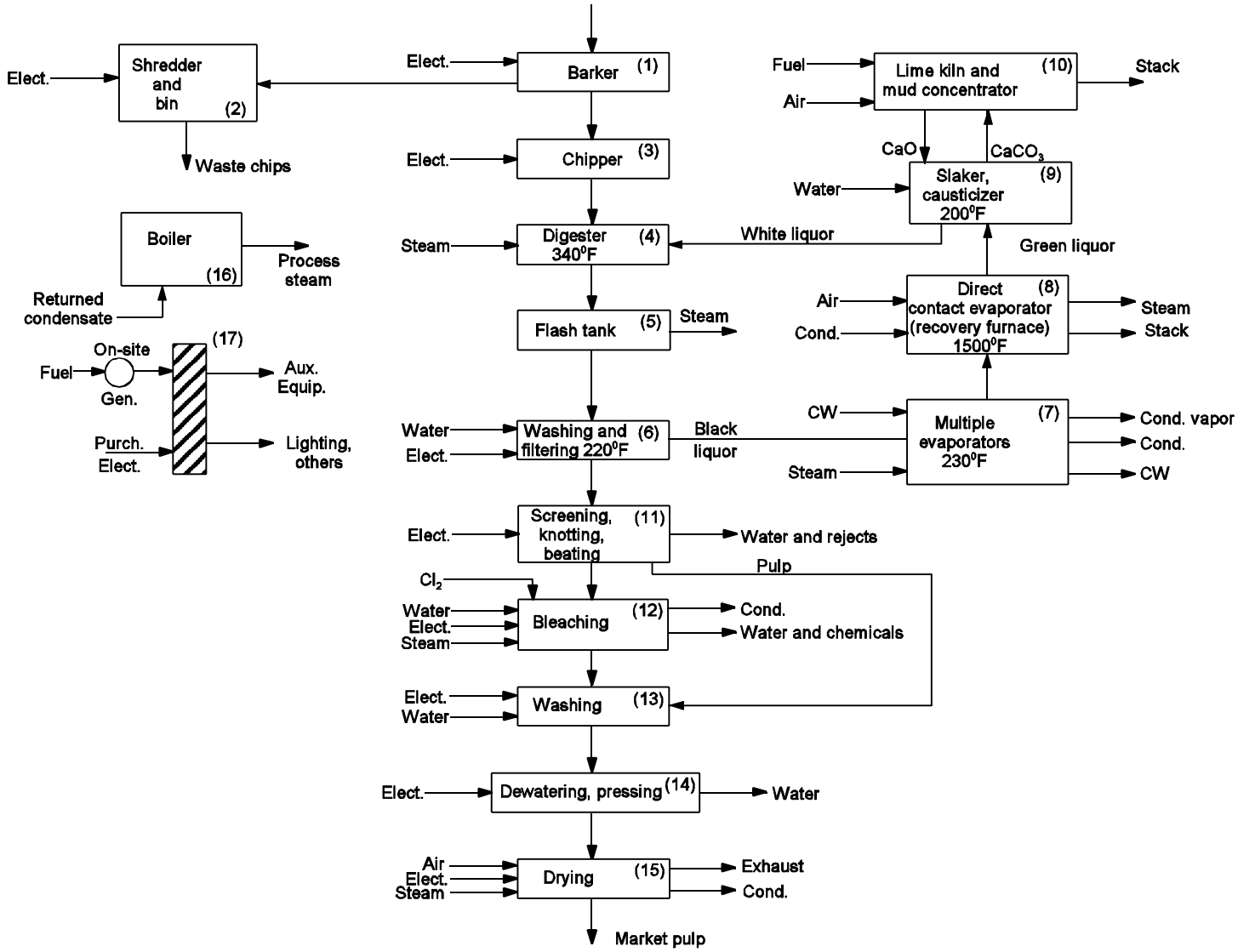

Figure 16.4Pulp mills (Kraft Process) progress flow.

Table 17.2 Comparison of Pulp and Paper Process Steam Requirements

Process	Conventional System (steam, psia)	Geothermal System (steam, psia)
Wash water heating	25	25 & hot water
Evaporators	25	25
Miscellaneous, L.P.[a]	25	25
Black liquor heating	135	75
Digester	135	135
Dryer	135	25 & hot water
Miscellaneous, H.P.[b]	135	75

a. Low pressure steam
b. High pressure steam

The geothermal energy system could be designed to supply the energy needed as shown in Figure 16.3. In this system, the bark boiler and fuel oil boiler have been eliminated and the heat previously supplied by these units is now furnished by a geothermal upgrading system using geothermal fluid at 250°F. The recovery boiler must be retained because it is needed to recover process chemicals as well as generate high pressure steam.

A typical pulp and paper mill could have approximately 30% of its energy supplied by 250°F geothermal fluid. Extending this to 390°F geothermal fluid and considering that the electrical requirements could also be generated from geothermal, it is possible that 100% of the energy for a pulp and paper mill could be supplied from geothermal.

The recovery boiler will generate approximately 50% of the electricity required by the plant. Thus, 50% of the electricity must be purchased, generated from additional geothermal fluid, or generated from steam produced from bark.

17.3.2 Drying Lumber (VTN-CSL, 1977)

A process flow diagram for a typical lumber mill is shown in Figure 16.5. In small lumber mills where drying kilns are heated by steam from conventional oil fired boilers, substitution of geothermal energy for the heating energy source can achieve substantial energy cost savings. In larger, well integrated mills, all energy from operations can be provided by burning sawdust and other wood waste products. If a market develops for the waste products or where the energy can be more economically applied elsewhere, the geothermal source may also become economical in integrated plants. Drying lumber in batch kilns is standard practice for most upper grade lumber in the western U.S. The two basic purposes of drying are to set the sap and to prevent warping.

The sap sets at 135 to 140°F. Warping is prevented by establishing uniform moisture content throughout the thickness. Lumber left to dry under ambient conditions loses its moisture from exposed surfaces at a faster rate than internally. This differential drying rate sets up stresses that cause the warping. Moisture occurs in wood in cell cavities and in the cell walls. The majority of the moisture is first lost from the cavities. This loss is not accompanied by changes in the size of the cell or in warpage. When water is lost from the cell walls, however, shrinkage of the wall fibers takes place setting up the stresses that cause warping.

In the kiln drying process, the evaporation rate must be carefully controlled to prevent these stresses. The allowable drying rates vary from species to species and decrease with thicker cut sizes. Kiln drying is usually carried out as a batch process. The kiln is a box-shaped room with loading doors at one end. It has insulated walls and ceiling and has fans to recirculate the air at high velocity through the lumber. The sawed lumber is spaced and stacked to assist the free air movement and is loaded by large fork lifts or other specialized lumber handling trucks into the kiln. When fully loaded, the doors are closed and the heating cycle is started. Make up air, preheated to a temperature consistent with the drying schedule, enters the kiln where it recirculates through the stacked lumber and picks up moisture. Exhaust fans draw the moist air from the kiln and discharge it to the atmosphere. The exhaust is primarily air and water. The rates of flow and temperature are adjusted so that the temperature and the humidity in the kiln will retard the drying rate sufficiently to prevent warping. During the drying cycle, the lumber loses a large portion of its weight from evaporation of water, 50 to 60% for many species.

Figure 16.6 shows a typical lumber drying kiln. The vents are over the fan shaft between the fans. The vent on the high pressure side of the fan become a fresh air inlet when the direction of circulation is reversed.

Drying schedules are specific for each species of lumber and for size. The larger the size the more tightly the moisture is held in the wood fiber, and slower the schedule. Drying schedules range from less than 24 h to several weeks per batch. Table 16.3 shows typical drying schedules for ponderosa pine.

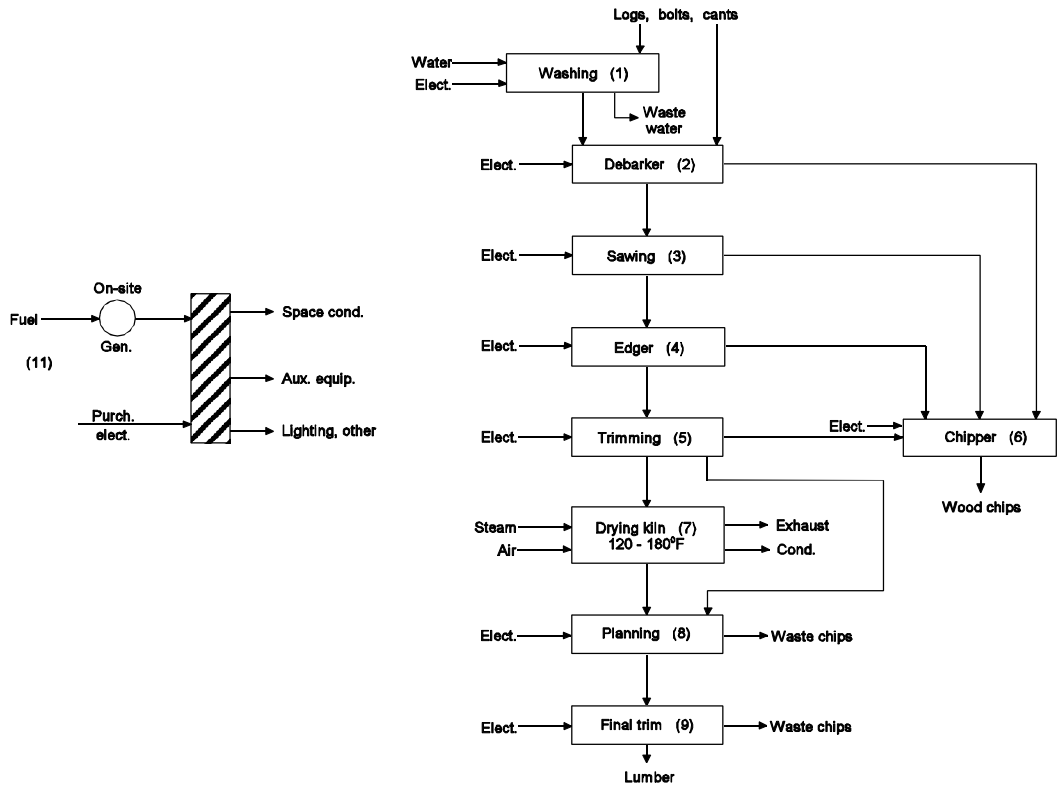

Figure 17.5 Lumber drying process flow.

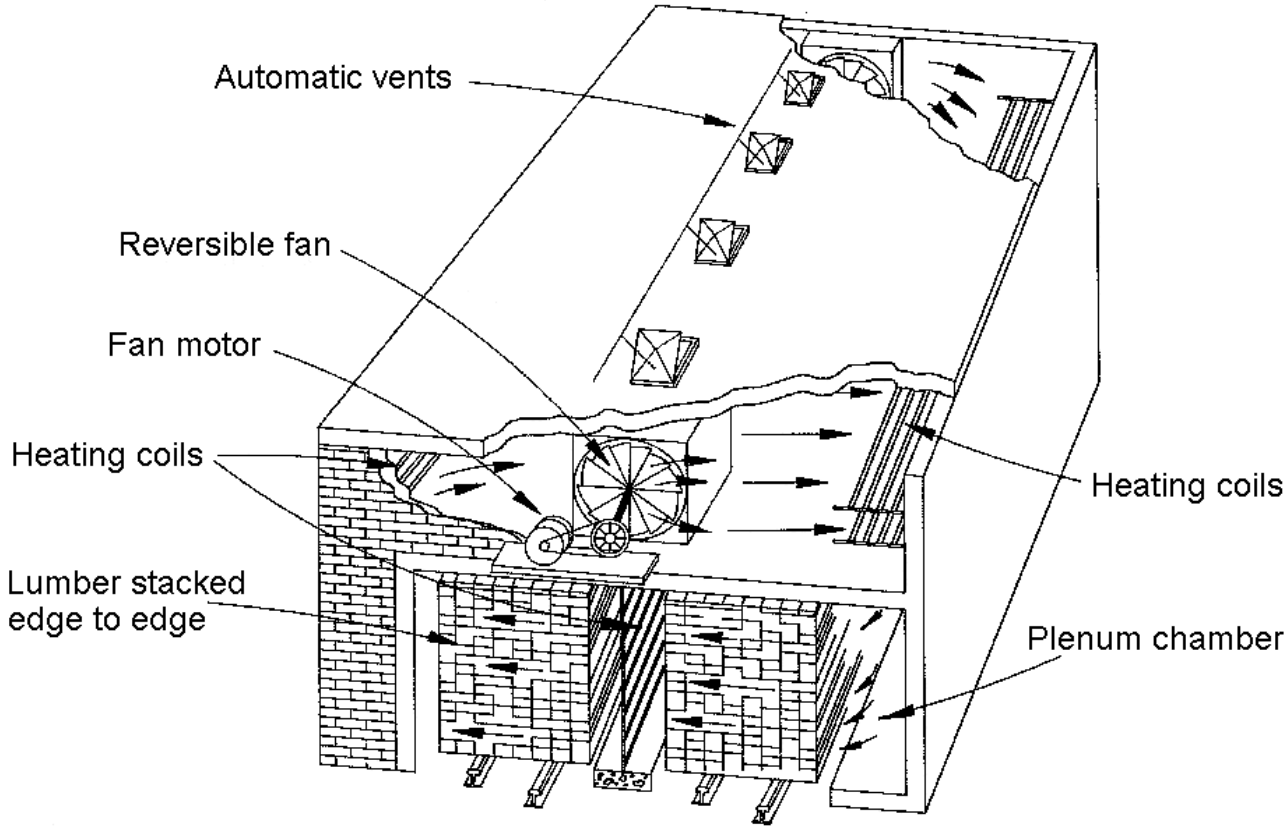

Figure 17.6 Long-shaft, double-track, compartment kiln with alternately opposing internal fans.

Table 16.3 Typical Kiln Drying Schedules[a]

Ponderosa Pine	Dry Bulb (°F)	Wet Bulb (°F)	Time	E.M.C.[b] (%)
4/4 all heart common sort (fast on well sorted stock)	160 No conditioning	130	~ 21 h	5.8
4/4 all heart RW (conservative) common	150 150 150	130 125 130	Up to setting To 12 h 12 h till dry (24 to 28 h)	8.0 6.9 5.8
4/4 half and half common (mostly 8 in.)	160 No conditioning	140	40 to 50 h	8.0
Shop and select 12/4	115	108	First day	14.1
	120	110	Second day	12.1
	125	115	Third day	12.1
	130	120	Fourth day	12.1
	140	130	Fifth to tenth	11.9
	145	130	Tenth to 12th	9.5
	150	135	12th to 15th	9.5
	155	140	15th to 18th	9.4
	160	140	18th to 22nd	7.9
	Cool			
	180	170	~24 h Equalizing & Conditioning	11.1

a. Kiln-drying Western Softwoods, Moore Dry Kiln Company, Oregon.
b. E.M.C. = Equilibrium Moisture Content.

Green wood contains high quantities of moisture. Ponderosa pine, for example, runs approximately 60% moisture. Because of the physical and chemical binding to the wood chemicals, it takes from 1½ to 3 times the energy to evaporate moisture from wood as it does from pure water. Energy consumed in kiln drying wood varies considerably for different species. Drying energy, therefore, varies widely with the species and sizes processed as shown in Table 16.4.

Table 16.4 Energy Consumed in Kiln Drying Wood[a]

Lumber	Energy Use (Btu/lb H_2O)	Btu/Dry (bd ft)
Douglas fir	2,000 to 3,000	1,560 to 2,340
Southern yellow pine	1,600 to 2,200	4,600 to 6,300
Red oak	3,000+	7,850+

a. Moore Dry Kiln Company, Oregon.

Geothermal energy could be adapted to kiln drying by passing air over finned heat exchanger tubes carrying hot water. The finned tube heat exchanger could be placed inside existing kilns (several arrangements are shown in Figure 16.7) so that the air recirculation route would include a pass over the heat exchangers. The water temperature must be at least 20 to 40°F above the ambient operating temperature in the kiln. This would mean a geothermal supply temperature of 200 to 240°F would be required. Where geothermal fluid of insufficient temperature is available (<180°F for most uses), energy supplies could be supplemented by conventional heating systems during the final high temperature portions of the drying schedules. Table 16.5 gives the minimum geothermal fluid temperatures for two sizes and several species of lumber.

The discharge fluid for these applications would have temperatures ranging from 160 to 180°F and would be available for other applications in the mill, for heating of office buildings, for log ponds, or other cascaded uses.

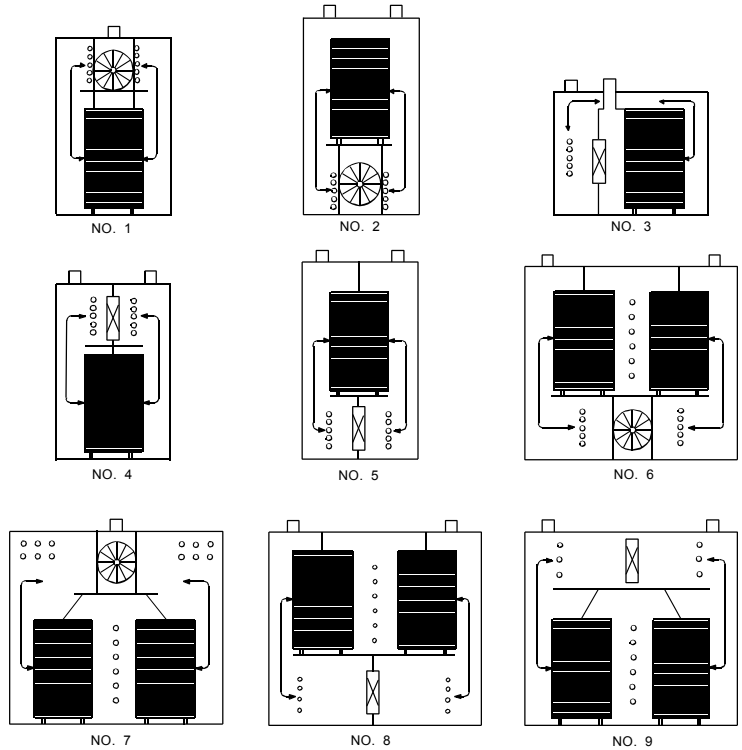

Figure 16.7 Location of fans and heat exchangers in kilns.

Table 16.5 Minimum Geothermal Fluid Temperatures for Kiln Drying at Kiln Inlet[a]

	Minimum Geothermal Fluid Temperature (°F)	
	Lumber Size	
Species	4/4	8/4
Ponderosa pine	175	195
Sugar pine	175	175
Englemen spruce	175	-
Sitka spruce	195	195
Douglas fir	195	195
Incense cedar	185	-

a. Moore Dry Kiln Company, Oregon (Knight, 1970)

16.3.3 Crop Drying (Lienau, et al., 1978)

The use of geothermal energy for crop drying of alfalfa and grain processing is described below.

Alfalfa Processing

There are two approaches to the drying of alfalfa from which two basic products are made, pellets and cubes. Cube production only generally requires field (sun) drying to approximately 17 to 19% moisture. When used as feed, the cubes do not require the addition of roughage. The pellets require significant quantities of heat for drying at a plant. The main advantage of this approach over sun curing is that more vitamin A and xanthophyll (a yellow pigment present in the normal chlorophyll mixture of green plants) is retained. The latter is important in chicken and egg coloring. The xanthophyll is retained better by high heat and rapid drying.

Pellets could be processed using either high temperatures or low temperatures in combination with field wilting. The first approach, using conventional fuels, is the rotary-flame furnace, which is common in the U.S., requiring temperatures up to approximately 1800°F. A second involves field wilting to reduce the moisture content, with the remainder of the moisture to be removed in the drying plant. This process requires temperatures of about 180 to 250°F. Figure 16.8 shows a process flow diagram of such an alfalfa drying plant.

The process starts with cutting and chopping the alfalfa in the field at approximately 70% initial moisture. The chopped material is then allowed to sun wilt for 24 to 48 h to a 15 to 25% moisture content. This can easily be accomplished in areas of the West because of available sun and low rainfall during the season. The Midwest is only able to wilt to approximately 60% moisture. This short field wilting time also prevents damage to the next crop, as the cut material is removed before the new shoots sprout and are crushed by equipment. The field wilted material is

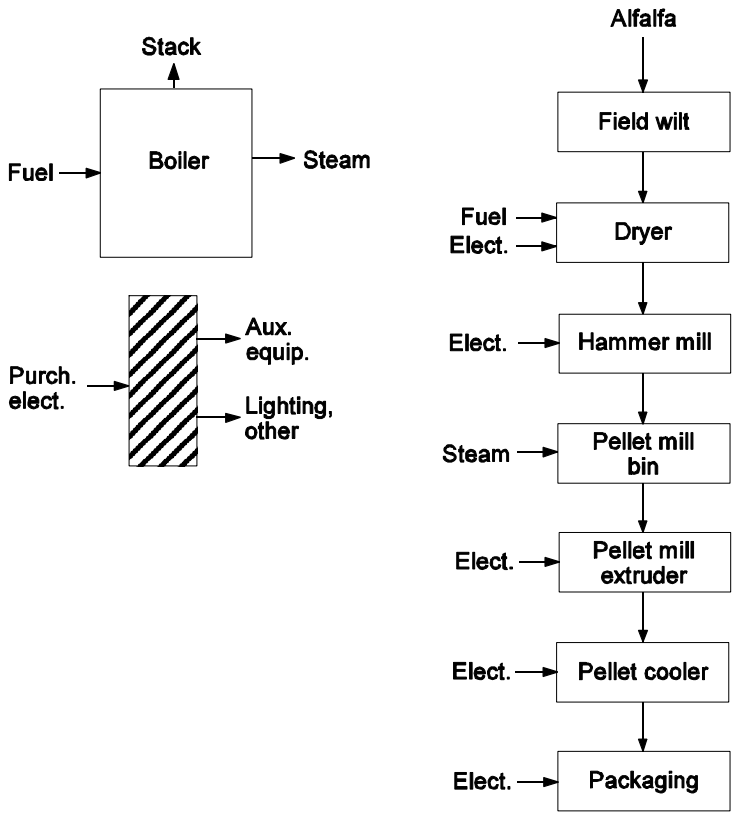

Figure 16.8 Alfalfa drying and pelletizing process.

then trucked to the plant, and stockpiled for no more than approximately 2 days. The chopped material is then belt-fed to a triple-pass rotary drum dryer. This dryer may use either natural gas or fuel oil. The alfalfa is dried at a temperature below 250°F. Any temperature over 390°F will over-dry the product. The actual drying temperature depends upon the ambient conditions and moisture content of the alfalfa. Dryer temperatures can go as low as 176°F. The material is moved through the dryer by a suction fan. The retention time is approximately 15 to 20 min.

From the dryer, the alfalfa is fed to the hammer mill and the pellet meal bin. The latter is the surge point in the system. Here, the material is conditioned with steam and then fed to the pellet mill pressure extruder. The steam helps in providing a uniform product and makes it easier to extrude through the holes in the circular steel plates. The material is then cooled and the fines removed in a scalper. Finally, the product is weighed on batch scales, packaged and stored.

A low temperature geothermal energy conversion would require using 200°F air drying temperature from a triple-pass dryer using at least 220° geothermal fluid. One well could provide the required flow for a plant producing 25,000 to 30,000 tons of alfalfa pellets/year (at 8 to 15% moisture).

Grain Drying

Significant amounts of energy are consumed annually for grain drying and barley malting. These processes can be easily adapted to geothermal energy in the temperature range of 100 to 180°F. Most farm crops must be dried to, and maintained at, a moisture content of 12 to 13% wet basis, depending on the specific crop, storage temperature, and length of storage. Mold growth and spoilage are functions of elapsed storage time, temperature, and moisture content above the critical value. Grain to be sold through commercial markets is priced according to a specified moisture content, with discounts for moisture levels above a specified value.

The grain dryer is typically a deep bed dryer, as shown in Figure 16.9. Most crop-drying equipment consists of: (a) a fan to move the air through the product, (b) a controlled heater to increase the ambient air temperature to the desired level, and (c) a container to distribute the drying air uniformly through the product. The exhaust air is vented to the atmosphere. Where the climate and other factors are favorable, unheated air is used for drying, and the heater is omitted.

Several operating methods for drying grain in storage bins are in use. They may be classified as full-bin drying, layer drying, and batch drying. The deep bed dryer can be

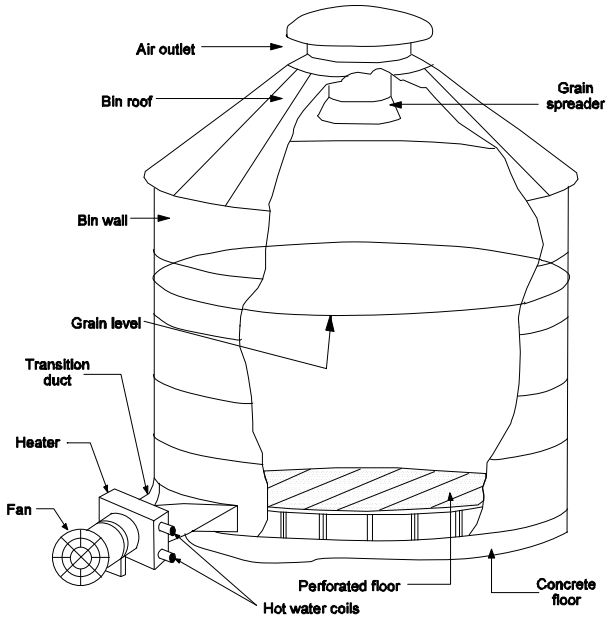

Figure 16.9 Perforated false floor system for bin drying of grain.

installed in any structure that will hold grain. Most grain storage structures can be designed or adapted for drying by providing a means of distributing the drying air uniformly through the grain. This is most commonly done by either a perforated false floor or duct systems placed on the floor of the bin.

Full-bin drying is generally done with unheated air or air heated 10 to 20°F above ambient. A humidistat is frequently used to sense the humidity of the drying air and turn off the heater if the weather conditions are such that heated air would cause over drying.

The depth of grain (distance of air travel) is limited only by the cost of the fan, motor, air distribution system, and power required. The maximum practical depth appears to be 20 ft for corn and beans, and 13 ft for wheat. Grain stirring devices are used with full-bin systems. These devices typically consist of one or more open, 2 in. diameter, standard pitch augers suspended from the bin roof and side wall and exten-ding to near the bin floor.

Conversion of the deep bed dryer to geothermal energy is accomplished by simply installing a hot water coil in the inlet duct using geothermal fluid in the 100 to 120°F temperature range.

Of all grains, rice is probably the most difficult to process without quality loss. Rice containing more than 13.5% moisture cannot be safely stored for long periods. When harvested at a moisture content of 20 to 26%, drying must be started promptly to prevent the rice from souring. Deep-bed or columnar dryers could be used; a columnar dryer will be considered.

Grain is transferred from the storage bins to the top of the column dryer by bucket conveyors. The column must be completely filled before the drying operations start. The grain flows from top to bottom by gravity and the amount of flow is controlled by the speed of the screw conveyor, located at the bottom of the column, as shown in Figure 16.10.

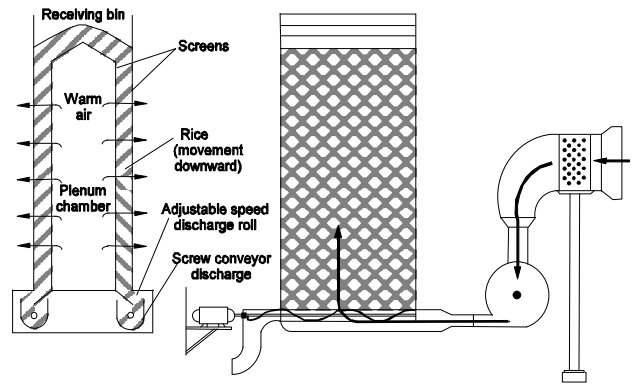

Figure 16.10 Columnar grain dryer (Guillen, 1987).

The two important variables in the drying operation are the air-mass flow rate and the temperature at the inlet to the dryer. Hot air is blown from the bottom and a static pressure is maintained between columns. Air temperature is controlled by regulating the burner output from several thermocouples installed inside the column to monitor the air and kernel temperature.

Rice is loaded in the dryer at approximately 21 to 22% moisture content and the drying cycle is normally completed after three to four passes. The final moisture content should be below 15% before it can be safely stored in the warehouse. After each pass, partially dried rice is stored in tempering bins for at least 12 hr before another pass takes place. The rice is tempered to equalize internal moisture content, thus minimizing thermal stresses and avoiding breakage of kernels. Kernel temperature is normally maintained at 100°F when the moisture content is approximately 21% and at lower moisture content, <17%, temperature is limited to 95°F. At a constant grain temperature of 100°F, air is heated to 180 to 200°F during cold weather and approximately 140 to 180°F during the warm season.

Converting the columnar dryer to geothermal fluids involves the installation of a hot water coil upstream of the blower fan to obtain uniform temperature inside the plenum chamber. The air flow pattern is shown in Figure 16.10 and there is no air recirculation because of the presence of dust on the down stream side.

Air flow could be maintained at a constant rate; then the only variable would be the flow rate of the grain.

A rice drying facility has been installed at Kotchany in Macedonia using 172oF geothermal water at 1.3 gpm (Figure 16.11). The Unit has a capacity of 8 tons/hr (Popovski, et al., 1992).

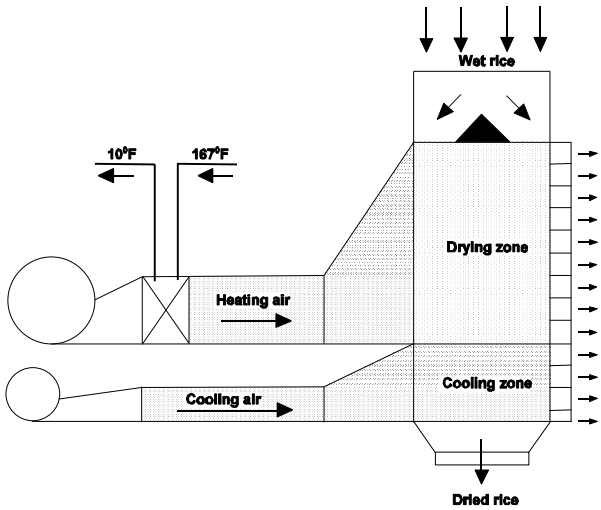

Figure 16.11 A schematic flow diagram of the geothermal rice drying plant in Kotchany, Macedonia (Popovski, et al., 1992).

16.3.4 Vegetable and Fruit Dehydration (Lienau, et al., 1978; Lund and Lienau, 1994)

Vegetable and fruit dehydration involves the use of a tunnel dryer, or a continuous conveyor dryer using fairly low temperature hot air from 100 to 220°F.

A tunnel dryer is an enclosed, insulated housing in which the products to be dried are placed upon tiers of trays or stacked in piles in the case of large objects, as shown in Figure 16.12. Heat transfer may be direct from gases to products by circulation of large volumes of gas, or indirect by use of heated shelves or radiator coils.

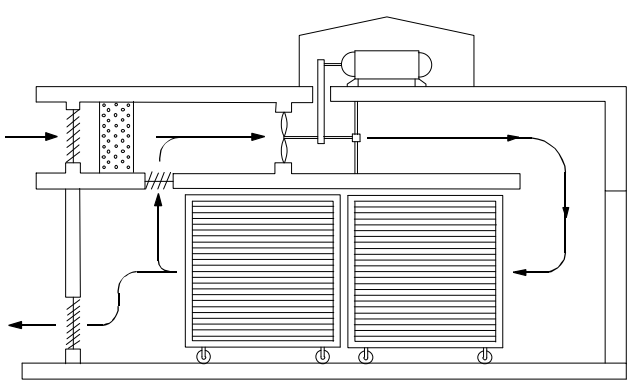

Figure 16.12 Tunnel dryer, air flow pattern (Guillen, 1986).

Because of the high labor requirements usually associated with loading or unloading the compartments, they are rarely used except in the following cases:

1. A long heating cycle is necessary because of the size of the solid objects or permissible heating temperature requires a long hold-up for internal diffusion of heat or moisture.

2. The quantity of material to be processed does not justify investment in more expensive, continuous equipment. This would be the situation for a pilot plant.

The process flow diagram for a conveyor dryer, which will be considered, is shown in Figure 16.13. Table 16.6 lists the many food products that may be commercially processed on conveyor dryers.

Table 16.6 Product Drying in a Conveyor Dryer

Vegetables	Fruits	Nuts	Prepared Foods	Prepared Feeds
Beans	Apples	Almonds	Beef jerky	Aniamal feeds
Onion	Raisins	Coconut	Bouillon	Pet food
Garlic		Brazil	Cereals	Cattle feed
Peppers		Peanuts	Macaroni	Fish food
Soy beans		Pecans	Snacks Hay	
Beets		Walnuts	Soup mixes	
Carrots		Macadamia		
Potato (sliced, diced chips, frenchfries)				
Spinach				
Parsley				
Celery				
Okra				

The energy requirements for the operation of a conveyor dryer will vary because of differences in outside temperature, dryer loading, and requirements for the final moisture content of the product. A single-line conveyor dryer handling 10,000 lb of raw product/hr (1,500 to 1,800 lb finished) will require approximately 21.0 x 10^6 Btu/hr, or for an average season of 150 day, 7.6 x 10^{10} Btu/season, using approximately 1.5 x 10^4 Btu/lb of dry product.

The energy (Figure 16.13) is usually provided by natural gas; air is passed directly through the gas flame in Stages A and B, and over steam coils in Stages C and D. The steam coils are necessary to eliminate turning of the product in the last two stages.

In addition to the heating requirements, electrical energy is needed for the draft and recirculation fans and small amounts for controls and driving the bed motors. Total electric power required for motors is from 500 to 600 hp, or approximately 1.0 x 10^4 kWh/day, or 2.0 x 10^6 kWh/season. This amounts to 1.0 x 10^3 Btu/lb of finished product and increases to approximately 6.0 x 10^3 Btu/lb when all electrical requirements are considered.

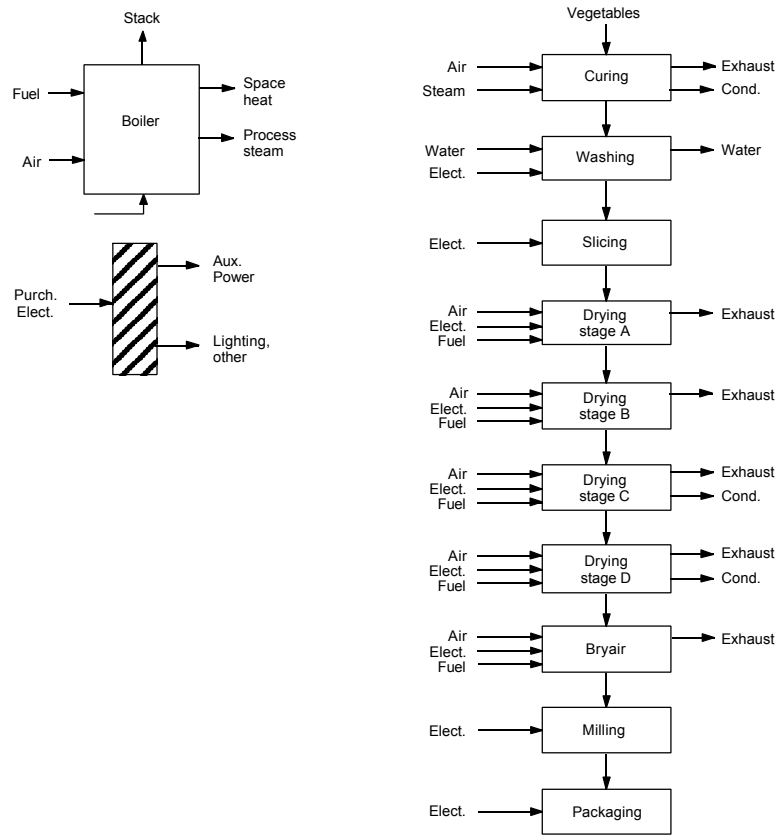

Figure 16.13 Vegetable dehydration process flow.

In general, four stages (A through D) are preferred; however, if the ambient air humidity is below approximately 10%, Stage D can be eliminated. Also, temperature and number of compartments in each stage may vary.

In summary, total heat requirement is 21.0 to 26.0 x 10^6 Btu/h for a single-line conveyor dryer approximately 210 ft long x 12.5 ft wide with an average input of 10,000 lb/h wet product, producing 1,500 to 1,800 lb/h dry product. Table 16.7 illustrates the energy requirement for each stage, using natural gas as a fuel, assuming ambient temperature at 40°F. For ambient temperature of 65°F, 21.0 x 10^6 Btu/h would be required.

Using the example in Table 16.7, geothermal fluid is used to supply the required energy. Using a 20°F minimum approach temperature between the geothermal fluid and process air, a well with 230°F fluid is required. The first-stage air temperature can be as low as 180°F; however, temperatures >200°F are desirable.

Figure 16.14 delineates a design using 230°F geothermal fluid. The line has to be split between Compartments A-1 and A-2, because both require 210°F air. A total flow of 900 gpm is required. The Bryair desiccator in Stage D requires 300°F on the reactor side, thus only half of the 1.0 x 10^6 Btu/h energy requirements can be met by geothermal energy. Geothermal fluid will be used for preheating to 175°F, with natural gas or propane used to boost the air to

Table 16.7 Conveyor Dryer Energy Requirement

Stage	Air Temperature (°F)	Heat Supply	Approximate HE Opening Size	Estimated Air Flow (cfm)	Estimated[a] (10^6 Btu/hr)
A1	210	Gas Burners	11 X 3 ft = 33 ft^2	29,000	5.0
A2	210	Gas Burners	14 X 3 ft = 42 ft^2	29,000	5.9
A3	190	Gas Burners	13 X 3 ft = 39 ft^2	41,000	3.6
A4	180	Gas Burners	15 X 3 ft = 45 ft^2	41,000	4.9
B1	160	Gas Burners	14 X 3 ft = 42 ft^2	17,000	3.6
B2	145	Steam Coils	11 X 3 ft = 33 ft^2	19,000	1.0
C	130	Steam Coils	15 X 3 ft = 45 ft^2	20,000	0.4
D	120	Steam Coils	29 X 3 ft = 87 ft^2	10,500	0.6
Bryair	300	Gas Burners	25	6,300	1.0
				TOTAL	26 X 10^6

a. Assuming ambient at 40°F, total = 21 x 106 Btu/h at 65°F ambient.

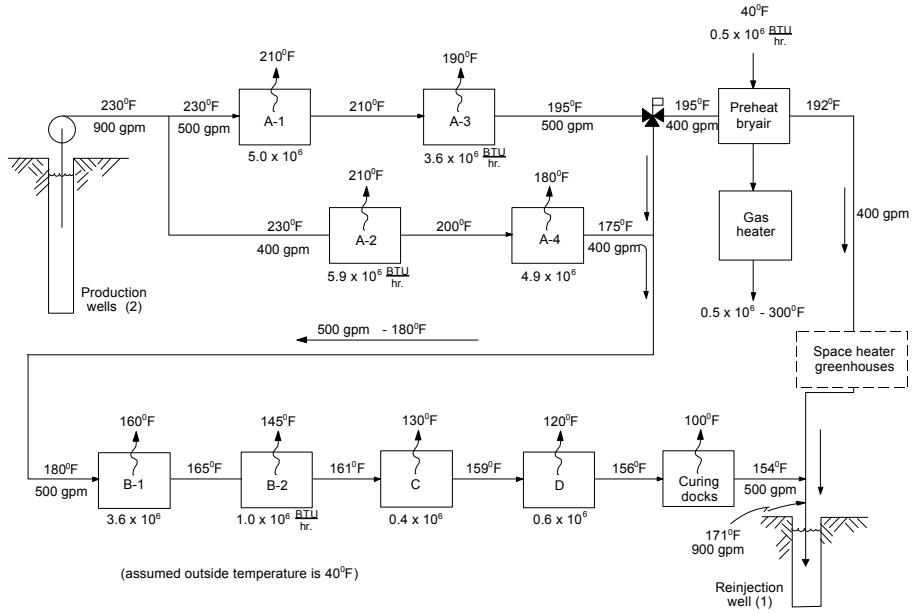

Figure 16.14 Multi-stage conveyor dryer using 230°F geothermal fluid and 40°F ambient air.

300°F. The waste water from the Bryair preheater has a temperature of 192°F, thus this could be used for cascaded uses. The waste water could be returned to the reservoir by means of an injection well.

In Compartments A-1, A-2, A-3, and A-4, four finned air-water heat exchangers in parallel would be required to satisfy the energy requirement and water velocity flows. The remaining stages would require from one to two heat exchangers in each compartment, depending upon the energy requirements.

If lower temperature geothermal fluids were encountered (below 200°F), then not all of the energy could be supplied to Stage A by geothermal fluid. Geothermal fluid would then be used as a preheater, with natural gas providing the energy for the final temperature rise.

16.3.5 Potato Processing (Lienau, et al., 1978)

Potato processing could result in a number of different types of products, including:

1. Potato chips.
2. Frozen french fries and other frozen potato products.
3. Dehydrated mashed potatoes - potato granules.
4. Potato flakes.
5. Dehydrated diced potatoes.
6. Potato starch.
7. Potato flour.
8. Canned potatoes.
9. Miscellaneous products from potatoes.

Since 1970, frozen potato products have constituted from 45 to 48% of all the potatoes used for processing, or nearly one-quarter of the food use of potatoes in the U.S. (Talburt and Smith, 1975).

Figure 16.15 illustrates a frozen french fry processing line. Many of the processing methods used by potato processors can utilize energy supplied by 300°F or lower temperature geothermal fluids. Typically, however, a few of the operations, notably the frying operation, will require higher temperatures than can be provided by a majority of the geothermal resources.

Potatoes for processing are conveyed to a battery of scrubbers and then moved into a preheater, which warms the potatoes and softens the skin, making it easier to remove. The potatoes are then chemically peeled by a 15% lye solution maintained at a temperature of 140 to 175°F.

Upon leaving the chemical peeler, the potatoes are conveyed to a battery of scrubbers, where the peeling is removed. After the scrubbers, the peeled potatoes are subjected to another washing process and then conveyed to the trim tables by pumping. The peeling removed by the scrubbers is pumped to a holding tank and sold as cattle feed following neutralization of the lye residue.

After the potatoes are trimmed for defects, the product is conveyed to cutter areas. Shakers sort the product. Small lengths are separated and then processed into hash browns or tator tots. The properly trimmed and sized product is then carried by gravity to the blanching system.

After blanching, the potatoes are de-watered and fed through a sugar drag, which adds a slight amount of dextrose to the surface of the potato, imparting a golden color when the potatoes are fried. They then pass through a dryer that removes the surface moisture before a two stage frying process. The first stage cooks the product more completely, while the second stage gives it the golden color. The oil in the fryers is heated to 375°F by heat exchangers receiving high-pressure steam at 275 psig.

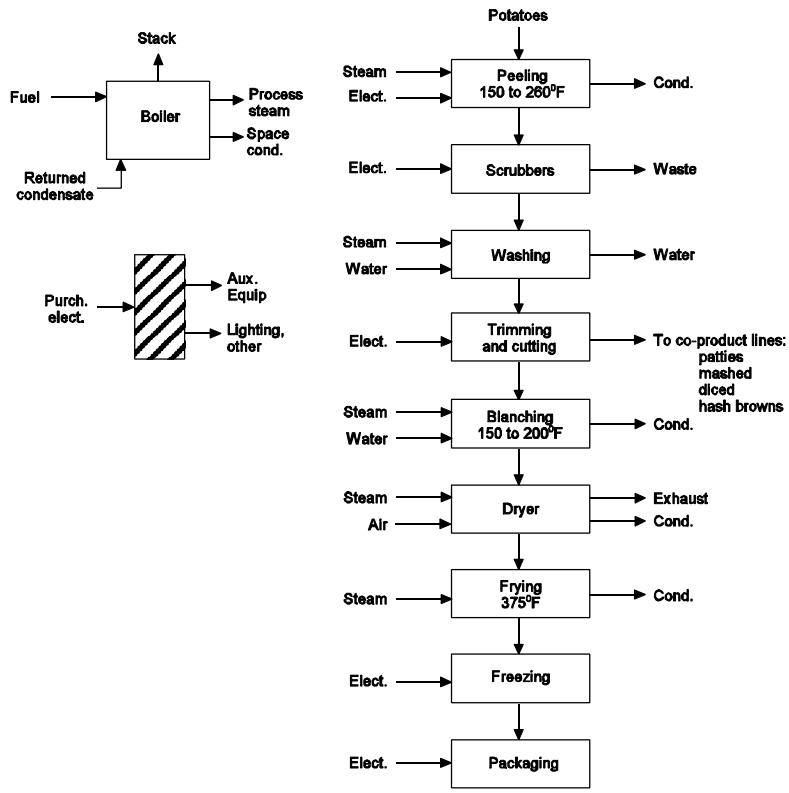

Figure 16.15 Frozen french fry process flow.

Freezing of the products is by continuous freezing systems powered by compressors. Freezing temperatures are maintained at a constant -30°F.

For systems that would use geothermal energy, the energy would probably be supplied to the process by way of intermediate heat exchangers. To avoid any possible contamination of the product by the geothermal fluid, or the need for treatment of the fluid, the geothermal fluid passing through these exchangers will transfer energy to a secondary fluid, usually water, which delivers the energy to the process. The secondary fluid, circulating in a closed system, then returns to the intermediate heat exchanger to be reheated.

Table 16.8 Potato Processing Temperature Requirements

Function	Temperature In (°F)	Temperature Out (°F)
Peeling	260	200
Peeling	200	150
Peeling	150	100
Hot blanch	200	100
Warm blanch	150	100
Water heating	150	50
Plant heat	150	100

Processes that could be supplied by a 300°F geothermal resource are distinguished in Table 16.8 by their function and temperature requirements. The peeling process involves three distinct steps calling for input temperatures of 250, 200, and 150°F. The hot blanch process uses an input temperature of 200°F and the warm blanch process requires 150°F. Heating of hot water used for various functions also calls for 150°F as does the plant heating system.

Figure 16.16 suggests one possible routing of the geothermal fluid through the intermediate heat exchangers for maximum extraction of energy. Energy requirements for the high temperature (200°F or more) processes are satisfied by dropping the geothermal fluid temperature from 300 to 190°F. The lower temperature processes are then supplied partially by this cascaded geothermal fluid and partially by fresh geothermal fluid.

The intermediate heat exchangers could either be of the shell-and-tube design or the compact and versatile plate-type heat exchanger. The secondary fluid circulating to the processing tanks could either be used directly, or the fluid could pass through heat exchangers located at the processing tanks to heat the fluid in the tanks.

The energy needed for refrigeration used for freezing at -30°F probably could not be supplied by geothermal energy because of the advanced state-of-the-art required for obtaining such low temperatures.

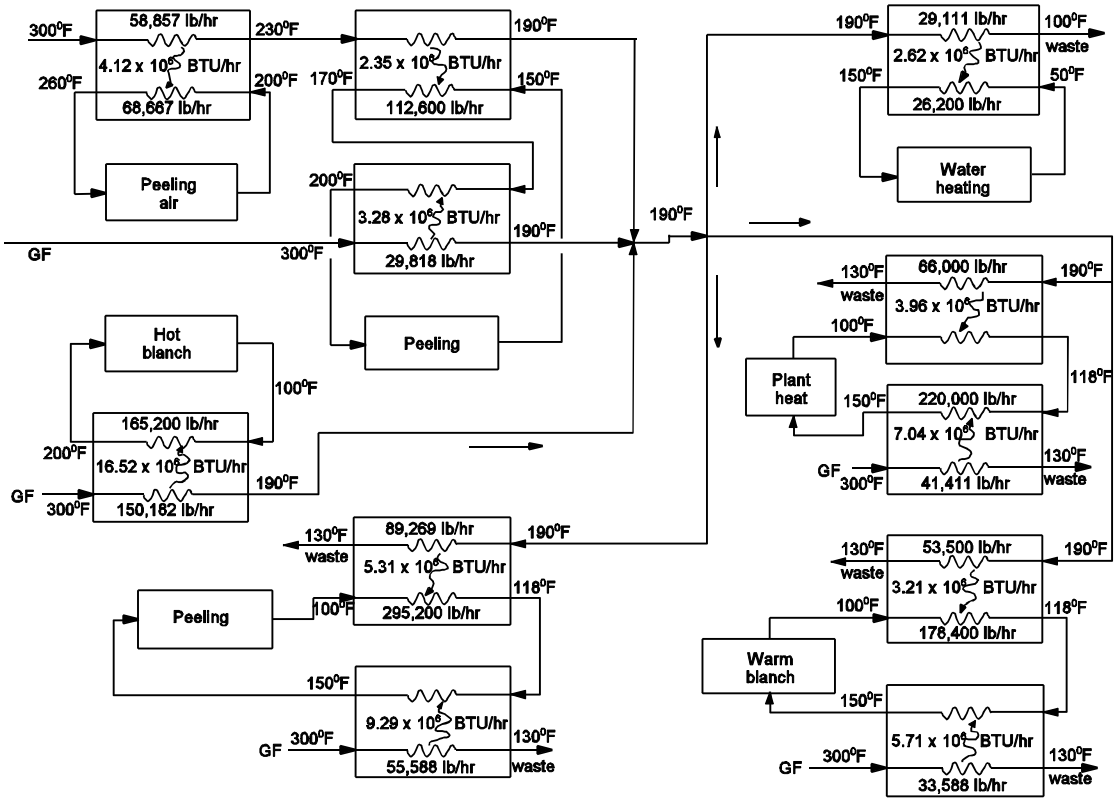

Figure 16.16 Potato processing flow diagram for geothermal conversion.

Saturated frying employs heat exchangers and steam at 275 psig. Typically, the fryers consume about 45% of the process energy of the plant and because the return temperature is >300°F, an assumed geothermal fluid supply temperature, over 50% of the process energy requirements could be supplied by geothermal energy.

16.3.6 Heap Leaching (Trexler, 1987 & 1990)

Heap leaching for gold and silver recovery is a fairly simple process that eliminates many complicated steps needed in conventional milling. A "typical" precious metal heap leaching operation consists of placing crushed ore on an impervious pad. A dilute sodium cyanide solution is delivered to the heap, usually by sprinkling or drip irrigation. The solution trickles through the material, dissolving the gold and silver in the rock. The pregnant (gold bearing) solution drains from the heap and is collected in a large plastic-lined pond (Figure 16.17).

Pregnant solution is then pumped through tanks containing activated charcoal at the process plant, which absorbs the gold and silver. The now barren cyanide solution is pumped to a holding basin, where lime and cyanide are added to repeat the leaching process. Gold bearing charcoal is chemically treated to release the gold and is reactivated by heating for future use. The resultant gold bearing strip solution, more concentrated than the original pregnant cyanide solution, is treated at the process plant to produce a doré, or bar of impure gold. The doré is then sold or shipped to a smelter for refining. Figure 16.18 is a process flow diagram for the operation.

One of the problems associated with heap leaching is low gold recovery. Commonly untreated ore will yield about 70 percent or less of the contained gold. Crushing the ore will increase recovery, but it also increases production costs. At some mines, the ore must be agglomerated, or roasted to increase recovery. Gold recovery can be usually increased by crushing, grinding, vat leaching, agglomerated, wasting, chemical pretreatment, or wetting, depending on the ore. Gold recoveries of over 95 percent are possible with cyanide leaching. The value of the additional gold recovered must be compared with the increase processing costs to determine the most cost effective method.

Using geothermal energy is another method of increasing gold recovery. Heating of cyanide leach solutions with geothermal energy provide for year-round operation and increases precious metal recovery.

It is known that the addition of heat to the cyanide dissolution process accelerates the chemical reaction. Trexler, et al. (1987) determined that gold and silver recovery could be enhanced by 5 to 17 percent in an experiment that simulated the use of geothermal heating of cyanide solutions.

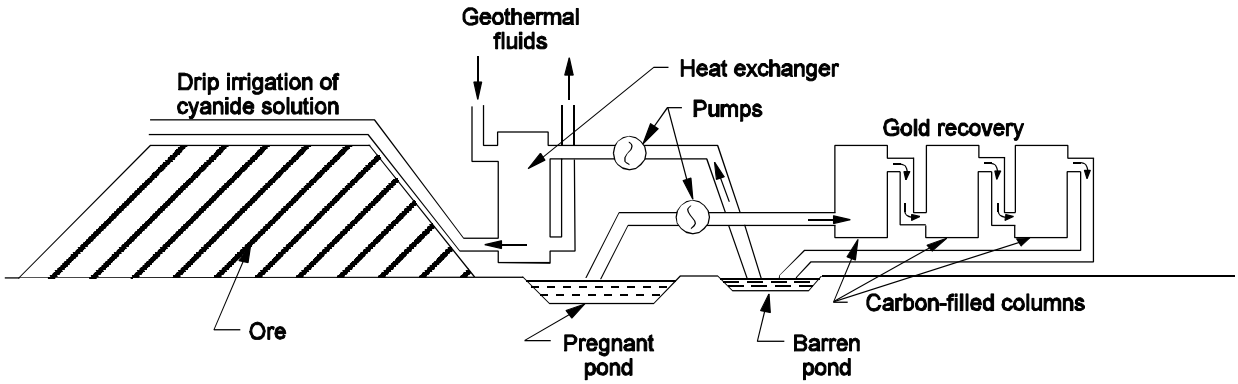

Figure 16.17 Idealized thermally enhanced heap leach (Trexler, et al., 1990).

Perhaps the most important aspect of using geothermal energy is that geothermally enhanced heap-leaching operations can provide year-round production, independent of the prevailing weather conditions. Figure 16.19 illustrates a cyanide heap leach "production window" that may be expected in central Nevada. This curve is provided for illustration purposes only and has not been substantiated by actual production data. If the production window opens at a minimum temperature of 40°F, then leaching operations may begin in mid-March and continue through late October. This has been the historical practice at Nevada mines. Since enhanced recovery of gold from heated cyanide solutions has already been established, maximum production would be restricted to June, July and August. Using geothermal fluids would substantially increase the size of the production window (shadowed area, Figure 16.19) and would provide for enhanced extraction rates on a year-round basis. The benefits include increased revenue to the mine operator, year-round employment for the labor force, and increased royalty payments for mineral leases to both federal and state governments.

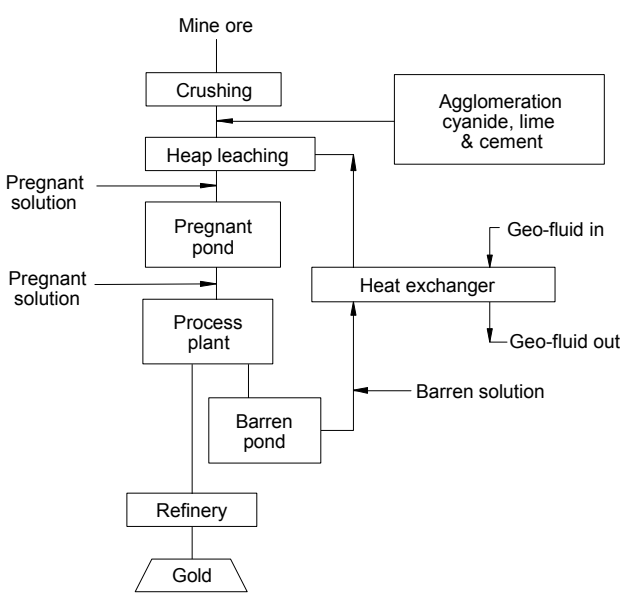

Figure 16.18 Heap leach process flow.

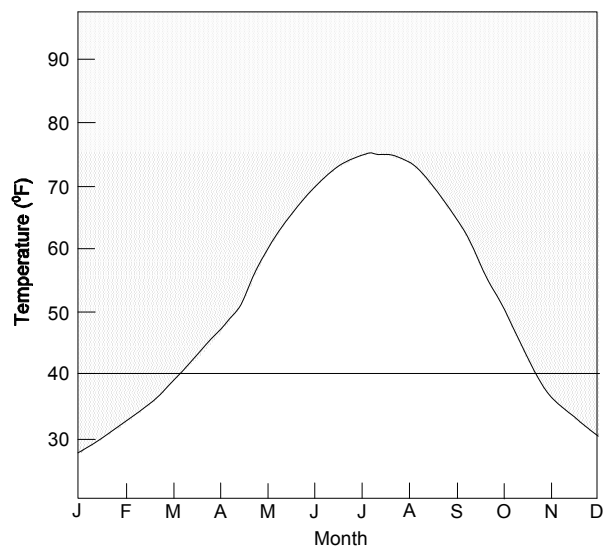

Figure 16.19 Soil temperature at a depth of 10 cm (4 inches) at Central Nevada Field Laboratory near Austin, NV (elevation 5,950 ft)(Trexler, et al., 1987).

Mines that incorporate geothermal fluids directly in heap leaching operations need to consider the chemical as well as the physical nature of the resource. Two aspects that must be addressed during elevated temperature leaching are the compatibility of geothermal fluids with leach solution chemistry and the susceptibility of the heap to mineral deposit formation from high total dissolved solids (TDS) geothermal fluids.

Cyanide reacts chemically with gold and oxygen to form a soluble gold cyanate (Na Au $(CN)_2$). Silver and platinum group metals are also dissolved by cyanide in similar reactions. Non-precious metals, such as iron, copper, manganese, calcium and zinc, along with the non-metals carbon, sulfur, arsenic and antimony also react with cyanide. Undesirable elements and chemical compounds, other than precious metals, that react with cyanide are called cyanocides.

Since cyanocides consume cyanide, high concentrations may interfere with the economic recovery of precious metals. To determine the compatibility of geothermal fluid chemistry with cyanide solutions, a series of consumption tests were conducted by Division of Earth Sciences, UNLV on a variety of geothermal waters from Nevada. Three major types of geothermal fluids are present in Nevada: NaCl, $NaSO_4$ and $Na/CaCo_3$.

Experimental leach columns were used by the Division of Earth Science, UNLV to analyze compatibility of geothermal fluid chemistry with cyanide solutions and to determine the effects of geothermal fluid chemistry on ore permeability. Preliminary results from this work indicate that:

1. Geothermal fluids do not cause plugging of the leach columns by precipitation of minerals.

2. The percent of recovery of gold is not significantly affected by concentration of the geothermal fluids in the process stream.

3. Geothermal fluids with high TDS do not contain significant concentrations of cyanocides.

16.3.7 Wastewater Treatment Plant (Racine, et al., 1981)

Potential uses of geothermal energy in the processing of domestic and industrial wastewater by a treatment plant include: (a) sludge digester heating, (b) sludge disinfection, (c) sludge drying, and (d) grease melting. Figure 16.20 is a process flow diagram for a wastewater treatment plant.

Wastewater enters the treatment plant by way of sewer lines. The wastewater undergoes preliminary treatment incorporating bar screens that collect screenings of debris. These are mechanically removed, and deposited into collection bins for sanitary disposal. Also, grit removal is accomplished by pre-aeration, a process by which air, under pressure, is bubbled through the raw wastewater to encourage floatable material and settleable material to separate more readily.

Following preliminary treatment, the wastewater flows to primary treatment where organic materials are allowed t o separate. This is accomplished by reducing the velocity of the wastewater in the primary clarifiers, so that these substances will separate from the water carrying them. The solid material, both settled sludge and skimmings, are

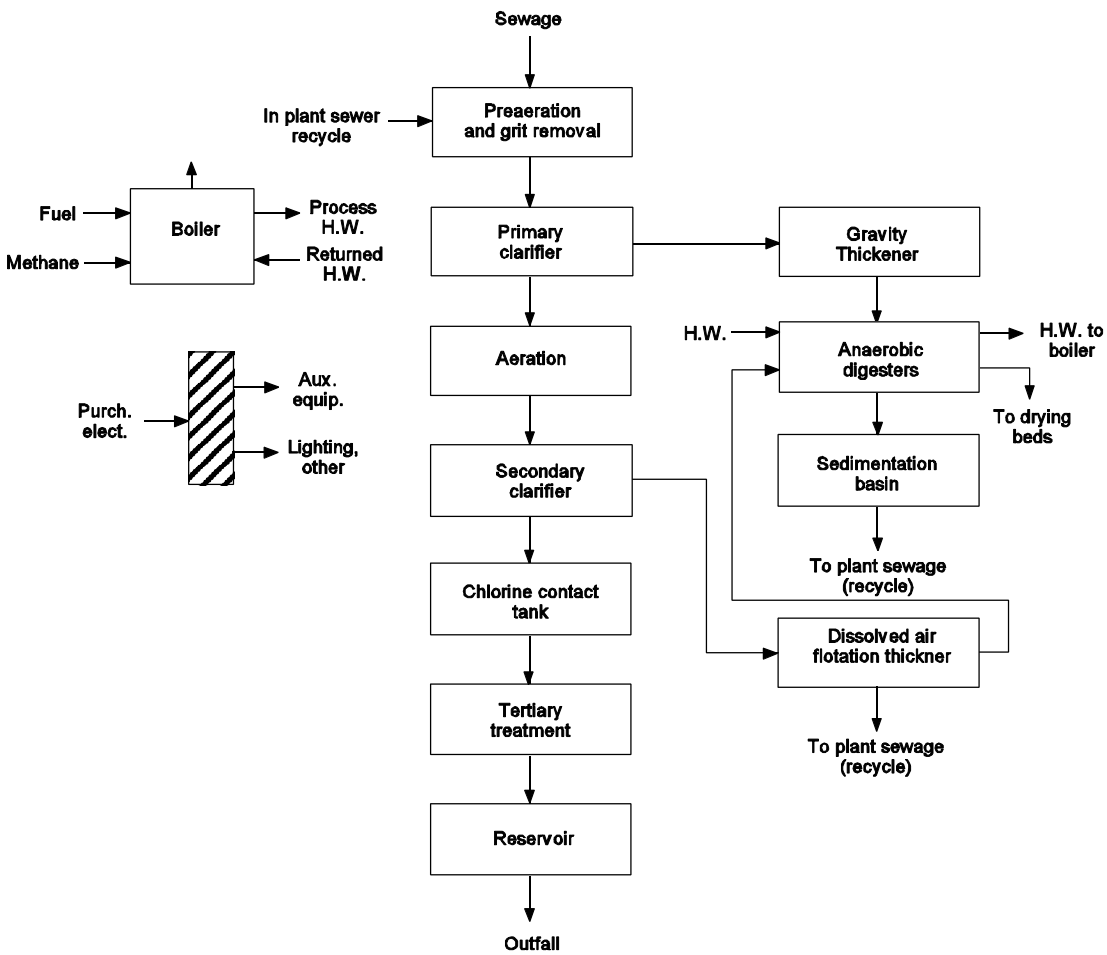

Figure 16.20 Waste water treatment process flow.

removed for further treatment. The liquid portion, or primary effluent, then flows to the aeration system to begin secondary treatment.

Secondary treatment processes are biological processes in which living aerobic (free oxygen demanding) micro-organisms feed on the suspended organic material not removed during primary treatment. The activated sludge process is accomplished in the aerators by introducing a culture of micro-organisms (activated sludge) to the primary effluent, along with large quantities of air for respiration of the microbes and for turbulent mixing of the primary effluent and activated sludge.

After aeration, the mixture of primary effluent and activated sludge flows to a secondary clarifier. At this point, settleable materials are again allowed to settle and the activated sludge is pumped back to the aeration system. Gradually, an excessive amount of solids accumulates and has to be removed. This waste activated sludge is treated with the solid material removed during primary treatment.

The secondary effluent then flows to the chlorine contact chamber and is disinfected by chlorination. In this process, liquid chlorine is evaporated into its gaseous state, the gas is injected at a controlled rate into a water supply, and this chlorine saturated water is allowed to mix with the secondary effluent. Sufficient detention time for thorough chlorine contact is then allowed, and finally the effluent is discharged to an outfall.

A portion of this final effluent is treated for a third time at the tertiary plant, where chemical additives are introduced to help remove any suspended material remaining in the effluent. After chemical treatment in a reactor clarifier, the effluent passes through a rapid sand filter for polishing and then into a storage reservoir.

The sludges and other solids collected throughout the treatment process are pumped from their various collection points to the thickeners, where they are concentrated through settling. This thickened sludge then is pumped to the digesters. Digestion is a biological process that uses living anaerobic (absence of free oxygen) micro-organisms to feed on the organics. Processes aided by heating and mixing break down the organic materials into a digested sludge and methane gas. The methane gas is collected and can be used to fuel various in-plant engines that drive pumps and compressors, while the well digested sludge is dried atmospherically on sand-bottom drying beds and mechanically with one belt press.

There are several uses for low temperature geothermal fluids within a typical waste water treatment facility. Table 16.9 presents a summary of potential heat uses that include sludge digester heating, sludge disinfection, sludge drying, and grease melting. Low temperature geothermal fluids are most suitable for sludge digester heating and sludge drying, which will be considered.

In the anerobic digesters the contents are heated and mixed to enhance the digestion process. The sludge temperature is maintained between 90 and 100ºF, within the mesophilic range, by circulating sludge from the digester to a heat exchanger where the sludge picks up heat and is returned to the digester. Methane fueled or natural gas boilers are usually used to heat water to approximately 155ºF. This water is passed through a spiral plate type heat exchanger where its heat is transferred to sludge circulating on the other side of the exchanger. Geothermal fluid temperatures as low as 120ºF could technically be sufficient to provide heat to sludge ranging in temperature from 90 to 100ºF.

Table 16.9 Waste Water Treatment Plant Process Temperatures

Process	Temperature Range (ºF)
Sludge digester heating	85 to 100 (mesophilic) 120 to 135 (thermophilic)
Sludge disinfection	
Pasteurization	158
Composting	131
Sludge drying	125 to 130
Grease melting	205

Sludge drying is usually accomplished by mechanical de- watering with belt presses and drying beds. The use of heat for drying may increase a plant's sludge handling capacity. In addition, if the sludge can be dried sufficiently, it may have commercial value as a fuel or fuel supplement. The dryer type that appears most compatible is the conveyor type using hot water coils to heat drying air. The minimum practical drying air temperature for sludge drying appears to be approximately 170ºF, which would require geothermal fluid temperatures on the order of 190ºF or above. Using the 170ºF air, approximately 2500 Btu will be required to evaporate 1 lb of water from belt press paste (80% moisture) to a dried product (10% moisture).

REFERENCES

Carter, A. C. and G. W. Hotson, 1992. “Industrial Use of Geothermal Energy at the Tasman Pulp & Paper Co., Ltd’s Mill, Kaweran, New Zealand,” Geothermics, Vol. 21, No. 5/6, Pergamon Press, NY, pp. 689-700.

Chin, 1976. "Geothermal Energy in Taiwan, Republic of China", Mining Research & Service Organization, ITRI, Taipei, Taiwan.

Chua, S. E. and G. F. Abito, 1994. "Status of Non-Electric Use of Geothermal Energy in the Southern Negros Geothermal Field in the Philippines," Geo-Heat Center Quarterly Bulletin, Vol. 15, No. 4, Klamath Falls, OR, pp. 24-29.

Georgsson, L. S. and G. D. Fridleifsson, 1996. "High Technology in Geothermal Fish Farming at Silfurstjarnan, Ltd., NE-Iceland," Geo-Heat Center Quarterly Bulletin, Vol. 17, No. 4, Klamath Falls, OR, pp. 23-28.

Guillen, H., 1987. "A Feasibility Study on the Establishment of Geothermal Food Dehydration Centers in the Philippines", Geo-Heat Center, Oregon Institute of Technology, Klamath Falls, OR, 1986.

Hornburg, C. D. and B. Lindal, 1978. Preliminary Research on Geothermal Energy Industrial Complexes, DOE Report, IDO/1627-4, DSS Engineers, Inc., Fort Lauderdale, Florida.

Horii, S. 1985. "Direct Heat Update of Japan", International Symposium on Geothermal Energy, International Volume, Geothermal Resources Council, Davis, CA, pp. 107-112.

Hotson, G. W., 1995. "Utilization of Geothermal Energy in a Pulp and Paper Mill," Proceedings of the World Geothermal Congress, Florence, Italy, International Geothermal Association, pp. 2357-2360.

Knight, E., 1970. "Kiln-Drying Western Softwoods", Moore Dry Kiln Company of Oregon, Portland, OR.

Kristjansson, I., 1992. "Commercial Production of Salt from Geothermal Brine at Reykjanes, Iceland," Geothermics, Vol. 21, No. 5/6, Pergamon Press, NY, pp. 765-771.

Lienau, P., et al., 1978. Agribusiness Geothermal Energy Utilization Potential of Klamath and Western Snake River Basins, Oregon, DOE Report, IDO/1621-1, Geo-Heat Center, Oregon Institute of Technology, Klamath Falls, OR.

Lindal, B., 1995. "Direct Use Industrial Applications of Geothermal Energy in Iceland," Proceedings of the World Geothermal Congress, Florence, Italy, International Geothermal Association, pp. 2349-2352.

Lindal, B., 1973. "Industrial and Other Applications of Geothermal Energy", Geothermal Energy: Review of Research and Development (LC No. 72-97138, UNESCO), Paris, France, pp. 135-148.

Lund, J. W. and T. L. Boyd, 1996. "Research on the Use of Waste Silica from the Cerro Prieto Geothermal Field, Mexico," Geothermal Resources Council Transactions, Vol. 20, Davis, CA, pp. 227-233.

Lund, J. W., 1994. "Geothermal Vegetable Dehydration at Brady's Hot Springs, Nevada," Geo-Heat Center Quarterly Bulletin, Vol. 15, No. 4, Klamath Falls, OR, pp. 22-23.

Lund, J. W. and P. J. Lienau, 1994. "Onion Dehydration," Geo-Heat Center Quarterly Bulletin, Vol. 15, No. 4, Klamath Falls, OR, pp 15-18.

Lund, J. W. and P. J. Lienau, 1994. "Onion and Garlic Dehydration in the San Emidio Desert, Nevada," Geo-Heat Center Quarterly Bulletin, Vol. 15, No. 4, Klamath Falls, OR, pp 19-21.

Pirrit, N. and M. Dunstall, 1995. "Drying of Fibrous Crops Using Geothermal Steam and Hot Water at the Taupo Lucerne Company," Proceeding of the World Geothermal Congress, Florence, Italy, International Geothermal Association, pp. 2239-2344.

Popovski, K.; Dimitrov, K; Andrejevski, B. and S. Popovska, 1992. "Geothermal Rice Drying Unit in Kotchany, Macedonia," Geothermics, Vol. 21, No. 5/6, Pergamon Press, NY, pp. 709-716.

Racine, W. C., et al., 1981. Feasibility of Geothermal Heat Use in the San Bernardino Municipal Waste Water Treatment Plant, DOE Report, Municipal Water Department, San Bernardino, CA.

Ragnarsson, A., 1996. "Geothermal Energy in Iceland," Geo-Heat Center Quarterly Bulletin, Vol. 17, No. 4, Klamath Falls, OR, pp 1-6.

Rutten, P., 1986. "Summary of Process - Mushroom Production," Oregon Trail Mushroom Company, Vale, OR.

Sigurdsson, F., 1992. Kisilidjan HF - A Unique Diatomite Plant," Geothermics, Vol. 21, No. 5/6, Pergamon Press, NY, pp. 701-707.

Steingrimsson, B.; Elisson, E. T.; Lindal, B. and G. Palmason, (editors), 1992. "Special Issue, Industrial Uses of Geothermal Energy," Geothermics, Vol. 21, No. 5/6, Pergamon Press, NY, 1009 p.

Talburt, W. F. and O. Smith, 1975. "Potato Processing," 3rd Edition, The AVE Publishing Company, Inc., Westport, CT.

Trexler, D. T.; Flynn, T. and J. L. Hendrix, 1990. "Preliminary Results of Column Leach Experiments at Two Gold Mines Using Geothermal Fluids", 1990 International Symposium on Geothermal Energy, GRC Transactions, Vol. 14, Hawaii, 1990, pp. 351-358.

Trexler, D. T.; Flynn, T. and J. L. Hendrix, 1987. "Enhancement of Precious Metal Recovery by Geothermal Heat", GRC Transactions, Vol. 11, Reno, NV, pp. 15-22.

VTN-CSL, 1977. "Economic Study of Low Temperature Geothermal Energy in Lassen and Modoc Counties, California", State of California, Division of Oil, and Gas and the Energy Resources Conservation and Development Commission, Sacramento, CA.

Wilson, R. D. 1974. "Use of Geothermal Energy at Tasman Pulp and Paper Company Limited New Zealand", in Multipurpose Use of Geothermal Energy, Oregon Institute of Technology, Klamath Falls, Oregon, 1974.