A CAPITAL COST COMPARISON OF COMMERCIAL GROUND-SOURCE HEAT PUMP SYSTEMS

Kevin Rafferty, P.E.
Geo-Heat Center
Oregon Institute of Technology

ABSTRACT

The ground-source heat pump industry is focusing a great deal of effort on reducing system first cost. For the most part, this effort has been directed at ground-coupled systems. This paper explores two other ground-source system types (hybrid and groundwater) and compares their costs to ground-coupled systems. Costs were developed for the three system types over a range of soil temperatures, well depths, building load characteristics and other parameters. Results show that reductions in capital cost of 20 to 80% can be achieved with hybrid and groundwater systems compared to ground-coupled systems.

GSHP DESIGN CONSIDERATIONS

Unitary ground-source heat pump systems for commercial buildings can be installed in a variety of configurations. The oldest and, until recently, most widely used approach was the groundwater system. In this design (Figure 1), groundwater from a well or wells is delivered to a heat exchanger installed in the heat pump loop. After passing through the heat exchanger (where it absorbs heat from or delivers heat to the loop), the groundwater is disposed of on the surface or in an injection well. The use of an injection well is desirable in order to conserve the groundwater resource.

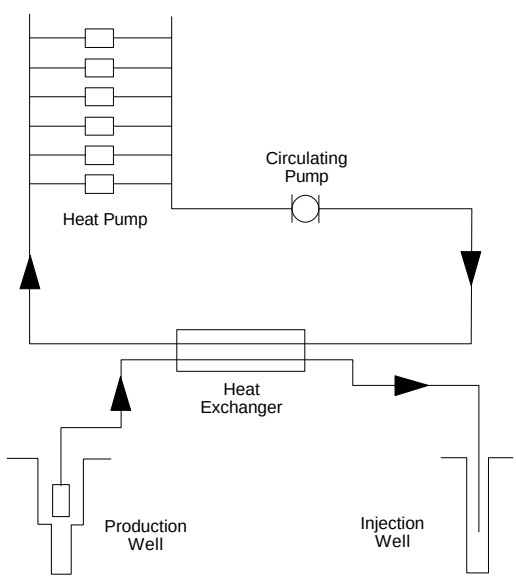

Figure 1. Groundwater heat pump system.

A second and increasingly popular design is the ground-coupled heat pump system. In this approach (Figure 2), a closed loop of buried piping is connected to the building loop. For most larger commercial applications, the buried piping is installed in a grid of vertical boreholes 100 to 300 ft deep. Heat pump loop water is circulated through the buried piping network absorbing heat from or delivering heat to the soil. The quantity of buried piping varies with climate, soil properties and building characteristics, but is generally in the range of 150 to 250 ft (of borehole) per ton of system capacity. Borehole length requirements are almost always dictated by heat rejection (cooling mode) duty for commercial buildings.

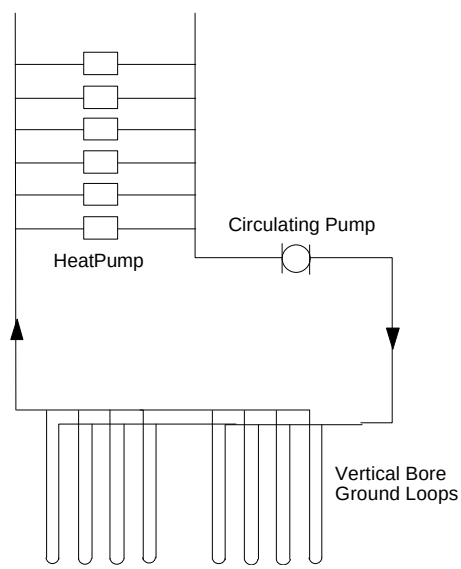

Figure 2. Ground-coupled heat pump system.