National Renewable Energy Laboratory

Modeling of Lean Exhaust Emissions Control Systems

Matthew Thornton

National Renewable Energy Laboratory

Subcontractor: Ricardo Inc.

DOE program Mangers: Steve Chalk, John Garbak, Steve Goguen

Presented at DEER Conference, August 28, 2002

Project Background

- This project is part of the DOE Advanced Petroleum Based Fuels (APBF) Activity
- One part of this activity is to develop a system modeling tool to evaluate pathways for reducing emissions from CIDI engines and to guide the APBF testing activities
- This project is referred to as System Emission Reduction (SER) analysis
- The intent is to build this system tool around NREL's existing ADVISOR advanced vehicle simulator
- The results that will be presented today are from a small modeling project under this larger SER effort

APBF Activity
Emission Reduction Pathway for SUV/Light-Heavy Truck

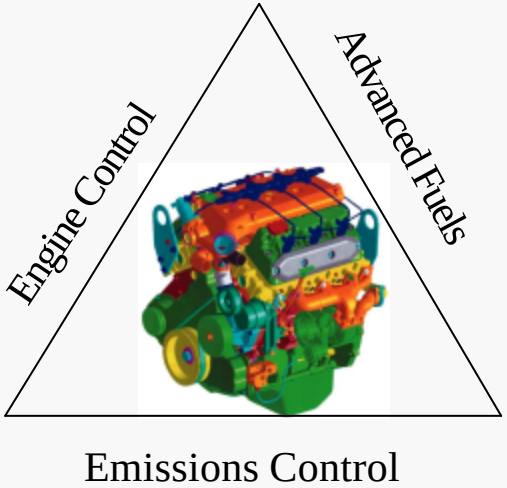

Pathway Component	NOx (g/mile)	Particulate Matter (g/mile)
Baseline	1.0	0.08
Fuel Formulation	1.0	0.06
Engine Control Strategies	0.6	0.06
Emissions Control	0.07	0.01
Target	0.07	0.01

Background on ADVISOR

- ADVISOR = ADvanced VehIcle SimulatOR
  - simulates conventional, electric, or hybrid vehicles
- Developed in MATLAB/Simulink environment
- ADVISOR was created in 1994 to support DOE Hybrid Program at NREL
- Released on vehicle systems analysis web site for free download in September, 1998 (www.nrel.gov/transportation/analysis)

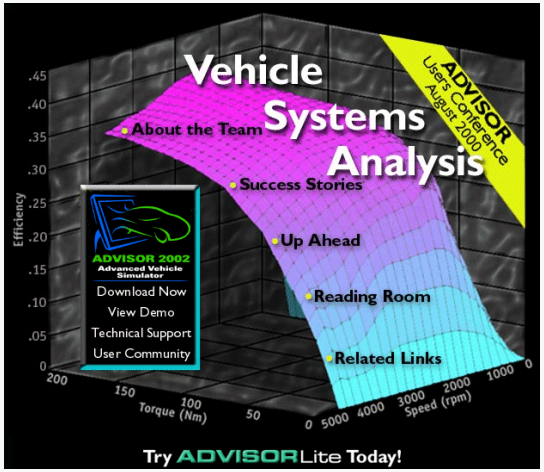

- Downloaded by over 4500 people around world

Enhancements to ADVISOR to Address Emissions Impacts of Diesel Powered Vehicles:

- Add vehicle and engine data into ADVISOR library to expand CIDI applications

- Integrate ADVISOR with engine model to enhance predictions of exhaust temperature, space velocity, and other parameters necessary to predict emission control device efficiency

- Develop CIDI emission control device submodels

ADVISOR 2002
Advanced Vehicle Simulator

NREL

CIDI Engine and Emission Control Modeling

- Model SUV and 5.0 L engine
- Simulate three emission control technology bundles
  - Urea SCR with active DPF
  - NAC with active DPF
  - LNC with active DPF
- Test the integration of ADVISOR with engine and emission control models
- Provide comparative fuel penalty and emission reduction results of the three technologies
  1. Relative to achieving Tier 2 bin 5 emissions levels
  2. Relative to amount of fuel used per unit of emission reduction

Modeling Approach

- Determine engine speed and load points for the simulated vehicle over the FTP
- Determine engine emissions over speed and load range
- Size catalysts based on emissions stream
- Tune emission control technology models to available data
- Apply emission control models to emissions stream
- Estimate emissions reduction benefit and fuel economy trade-off

Vehicle Model Details

ADVISOR SUV Model

- Vehicle mass, 2164 kg (4767 lbs)
  - Based on a Explorer, Grand Cherokee, and Blazer with a 5.0 L CIDI engine and 136 kg (300 lbs) of cargo
- 5 Speed manual transmission
- Provided second by second engine speed and load points over the FTP

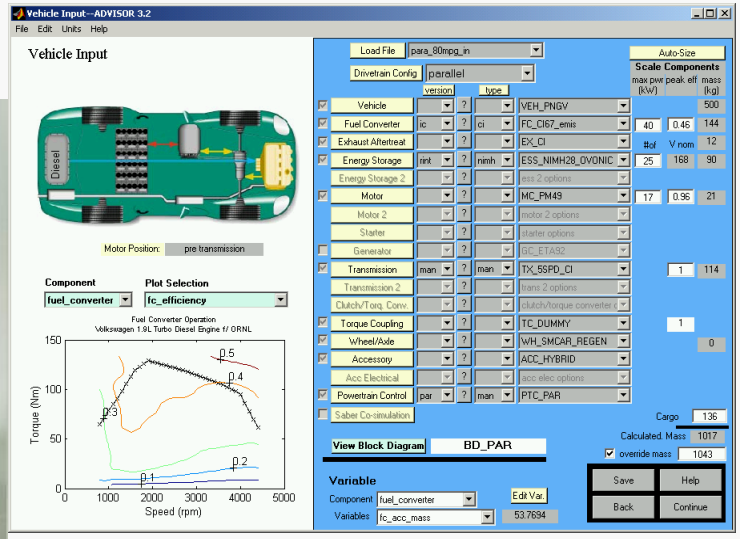

Engine Model Details

WAVE 1-D engine simulation software and engine maps

- 5.0 liter WAVE model
- Based on state-of-the-art technology
- Provided engine efficiency, exhaust temperature, and space velocity maps
- Detailed emissions maps based on test data

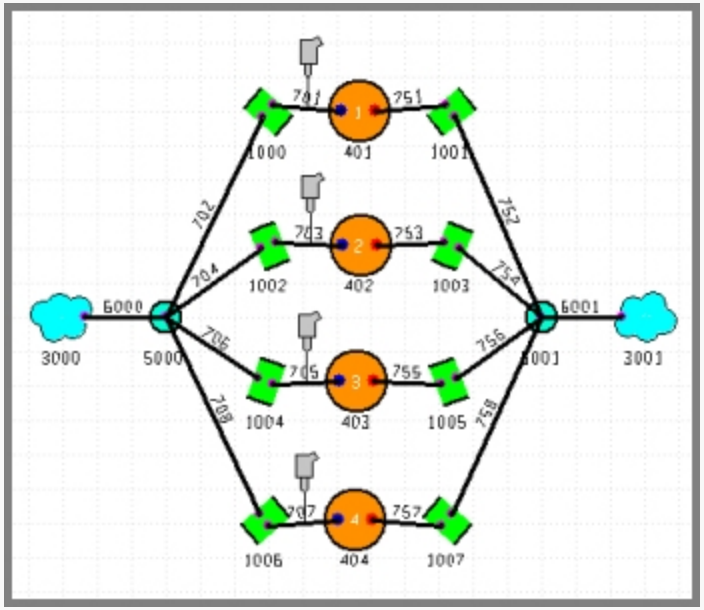

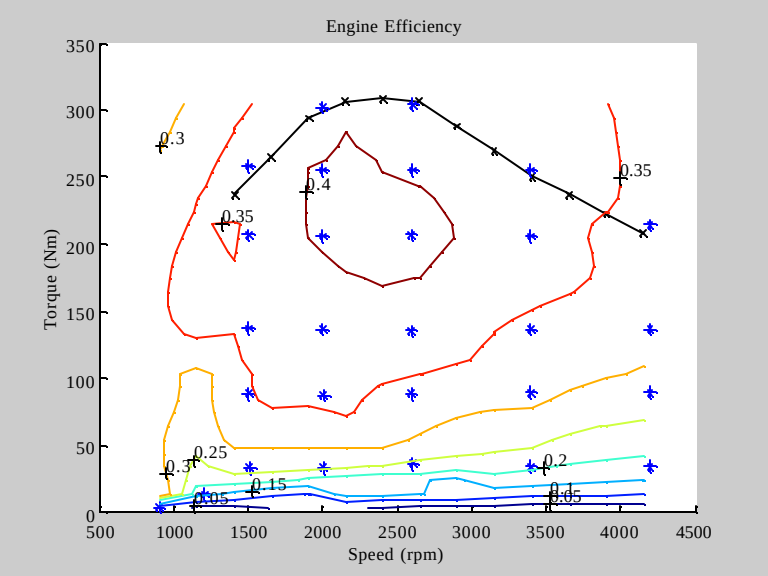

Emission Control Model Details

Ricardo's 1-D, quasi-steady, lumped chemical kinetic emissions control technology models

- Operate in MATLAB/Simulink environment
- Models validated to available test data
- Models sized and configured for this application
- Models include: mass transfer, heat transfer, global chemical reaction kinetics, and heat of reaction

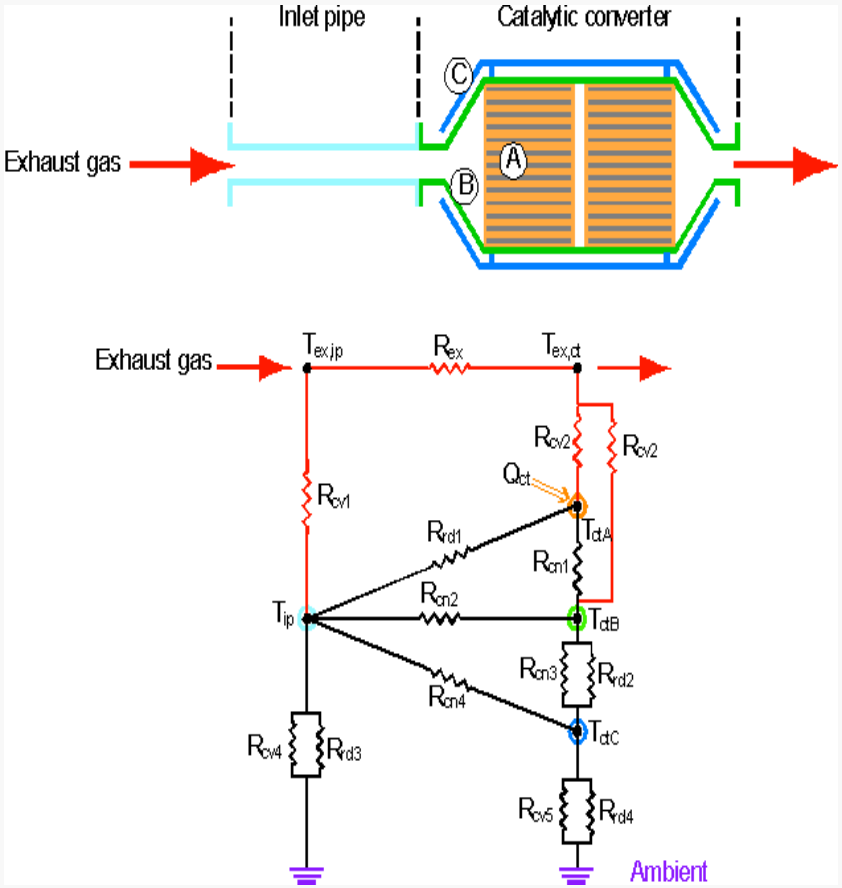

Modeling Analysis Assumptions

- Baseline engine out emissions static for all technologies
- Single catalyst formulation for each technology
- No additional exhaust heat generation strategies
- SCR Model
  - Urea decomposition instantaneous above 180° C
  - Ideal urea injection, NH_3/NOx ratio of 1:1
- NAC Model:
  - Fixed lean/rich cycling
  - No regeneration below 180° C
  - Release and reduction of NOx in a single reaction
  - Reductant limited to CO
  - Near zero fuel sulfur
- LNC:
  - Reductant assumed as propene
  - Ideal HC injection, C/NOx ratio of 8:1
  - No reductant injection below 150° C

Simulation Results

	Baseline	SCR + DPF	NAC + DPF	LNC+DPF
NOx (g/mile)	0.32	0.13	0.12	0.17
Tier 2 NOx Emissions Bin	10	8	8	9
Pm (g/mile)	0.057	0.0057	0.0059	0.0057
Fuel Economy (mpg)	24.6	24.4	24.1	24.3
Fuel Economy Penalty	N/A	1.14%	2.41%	1.56%

Simulation Results

Additional Grams Of Fuel Used Versus Grams Of NOx Emissions Reduced

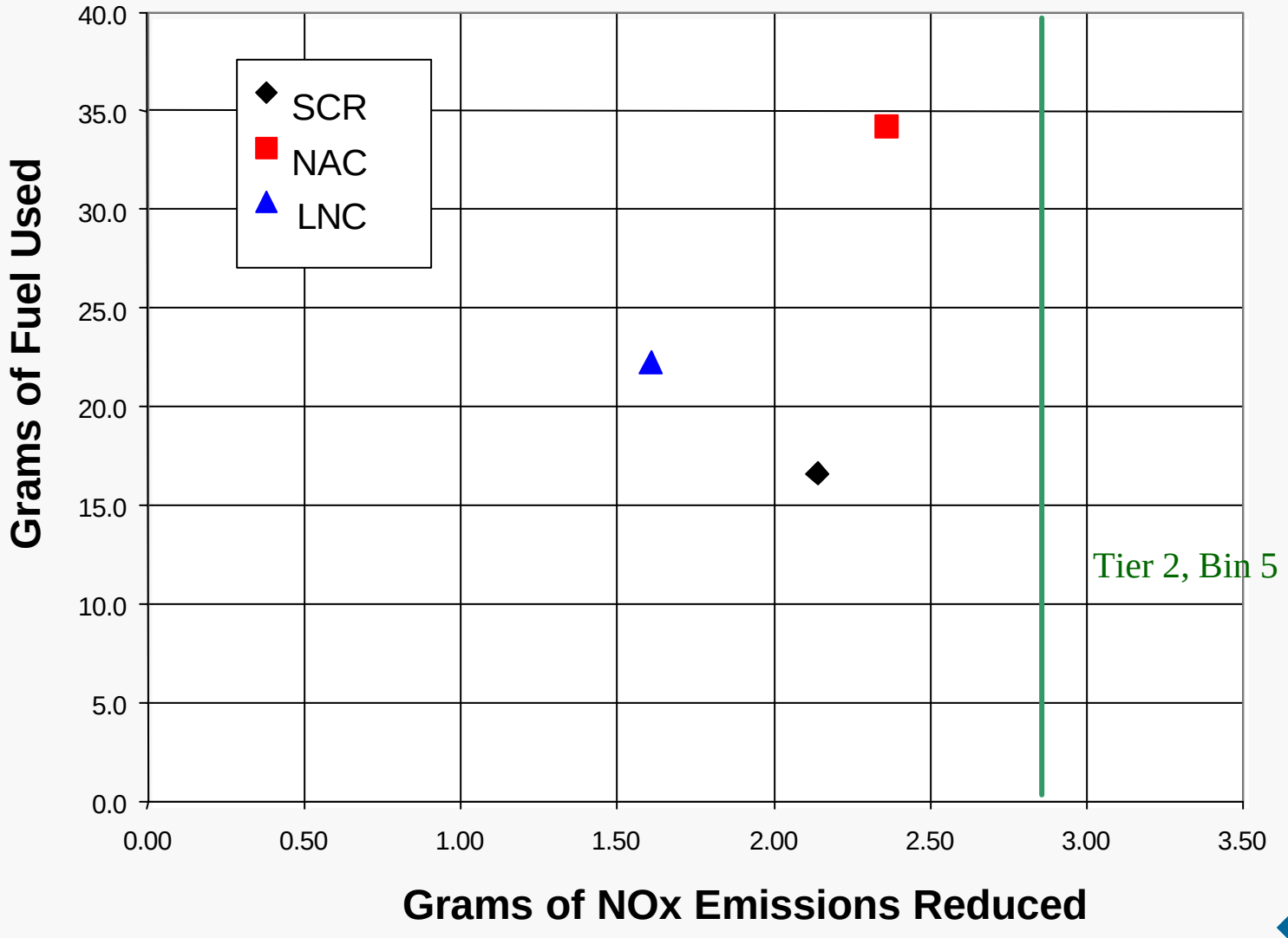

Factors Influencing Results

Fuel penalty:

Included:

- Exhaust system back pressure
- Fuel used for reductant
- Fuel used for DPF regeneration

But did not include:

- Urea reductant for SCR
- Fuel used for desulfation of NAC
- Electrical loads or fuel used for heat generation or rapid warm up routines

Modeling assumptions:

- Engine out baseline
- Lumped chemical kinetics
- Limited ECT optimization

Next Steps--Applications

- Evaluate the impact of thermal management or heat generation strategies
- Test catalyst sizing, design, location, or formulation
- Expand platforms
- Evaluate additional emission control technologies
- Evaluate off-cycle operating points
- Test alternate regeneration strategies
- Evaluate engine down sizing
- Evaluate wider fuel penalty issues
- Evaluate mild hybridization