Advanced A/T technology Development for CIDI Diesel Engines

7th Diesel Engine Emissions Reduction Workshop
August 7, 2000

Robert C Yu and Scott Cole
Cummins, Inc
Ken Howden
Department of Energy
Office of Advanced Automotive Technology

Outline of Presentation

- EAS Efficiency Requirements
- Technology Selection
- EAS Configuration Impact
- Fuel Sulfur Management
- Simulated FTP-75 Test Results
- Summary

Engine Out Emissions VS. EAS Efficiency Requirements

Future Emission Standards are "Aftertreatment Forcing"

US-HD

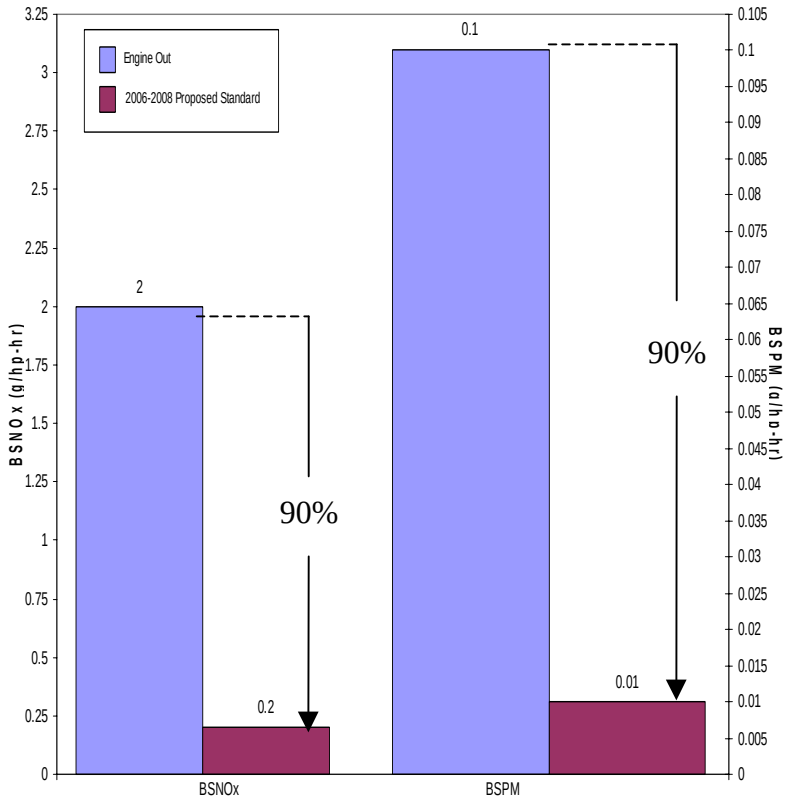

FTP-75

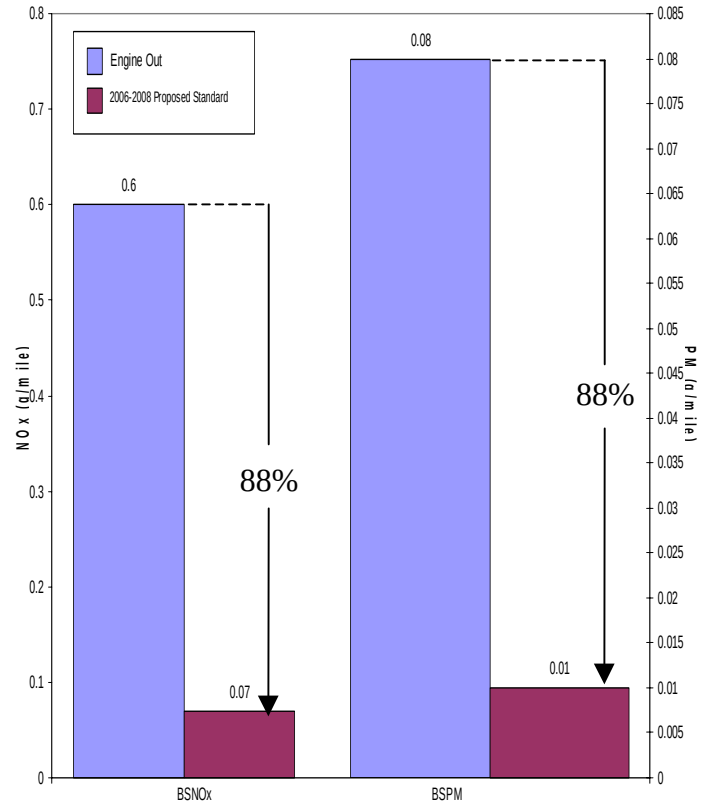

NOx Technology Selection

A. Selective Catalytic Reduction-HC (SCR-HC)

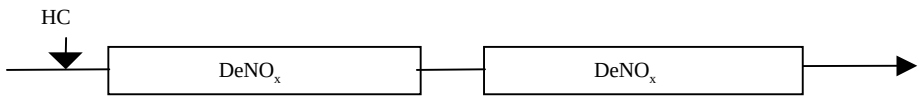

B. Plasma Assisted Catalytic Reduction (PACR)

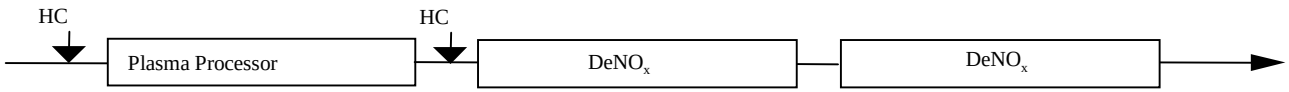

C. NO_x Adsorber Catalyst (AC), Full Flow

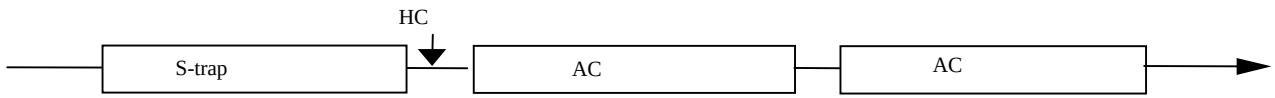

D. NO_x Adsorber Catalyst (AC), By Pass

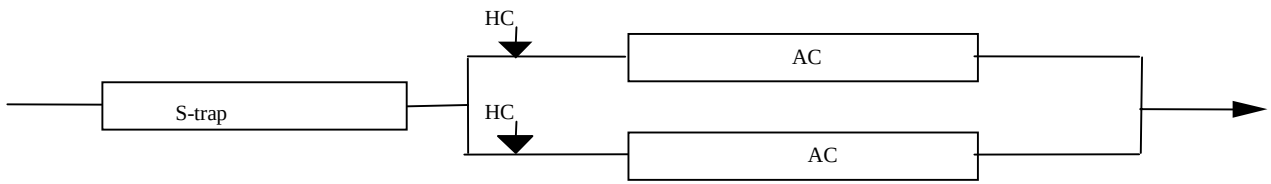

HC-Selective Catalytic Reduction

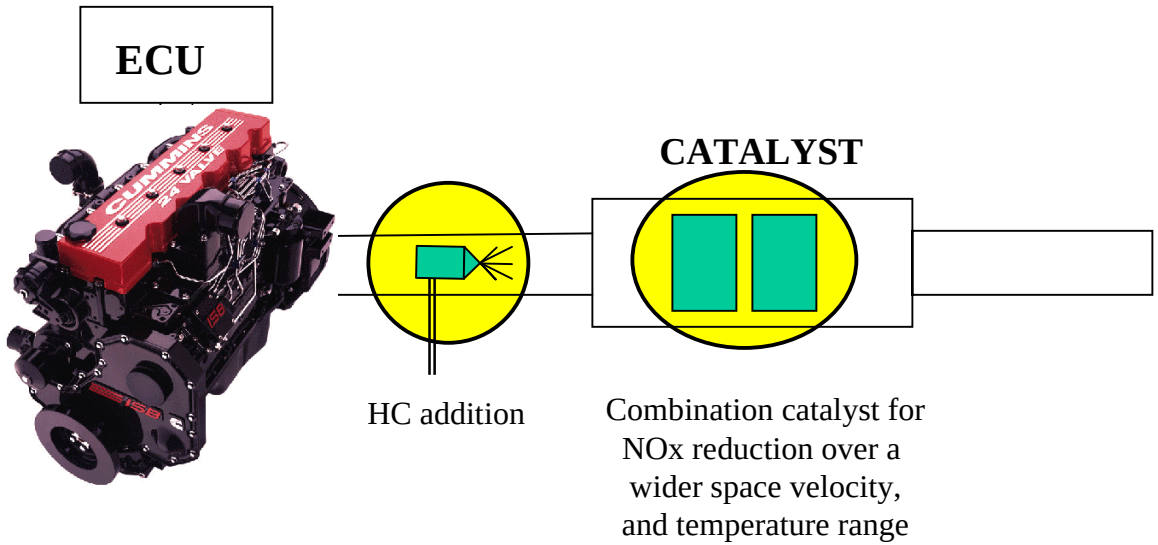

- Catalyst+NO+Urea+O_2 --> N_2+CO_2+H_2O (Urea-SCR)

VS.

- Catalyst+NO+HC+O_2 --> N_2+CO_2+H_2O (HC-SCR)

Technology Status - SCR-HC

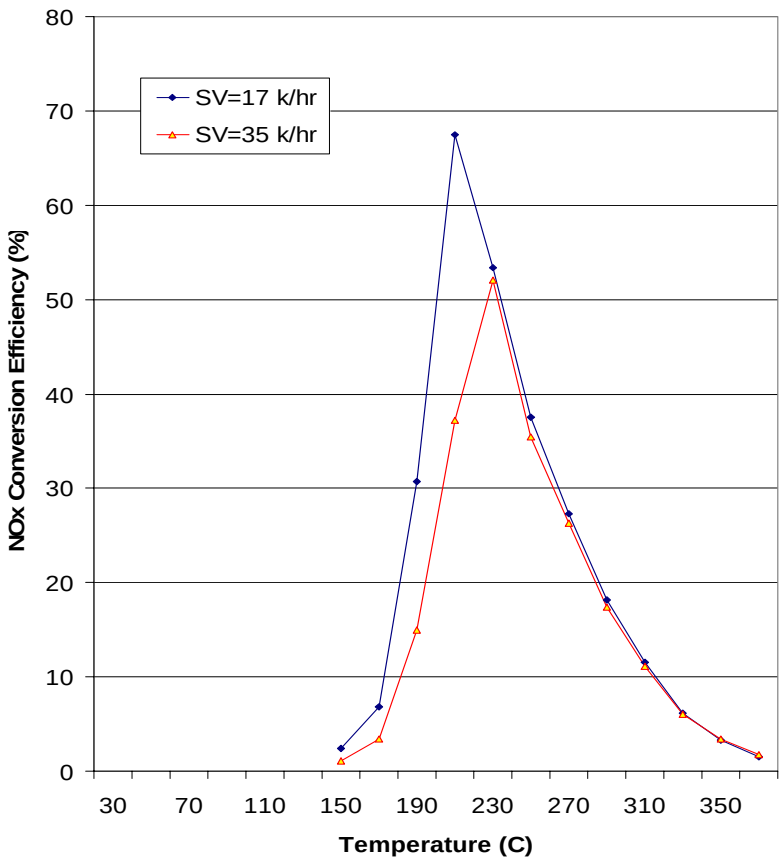

Positives

- Can use diesel fuel as reductant, diesel fuel can be added to exhaust or in-cylinder
- A 40% NO_x conversion efficiency was demonstrated with diesel as injection reductant
- Simple injection strategy with low complexity for implementation

Technology Status - SCR-HC

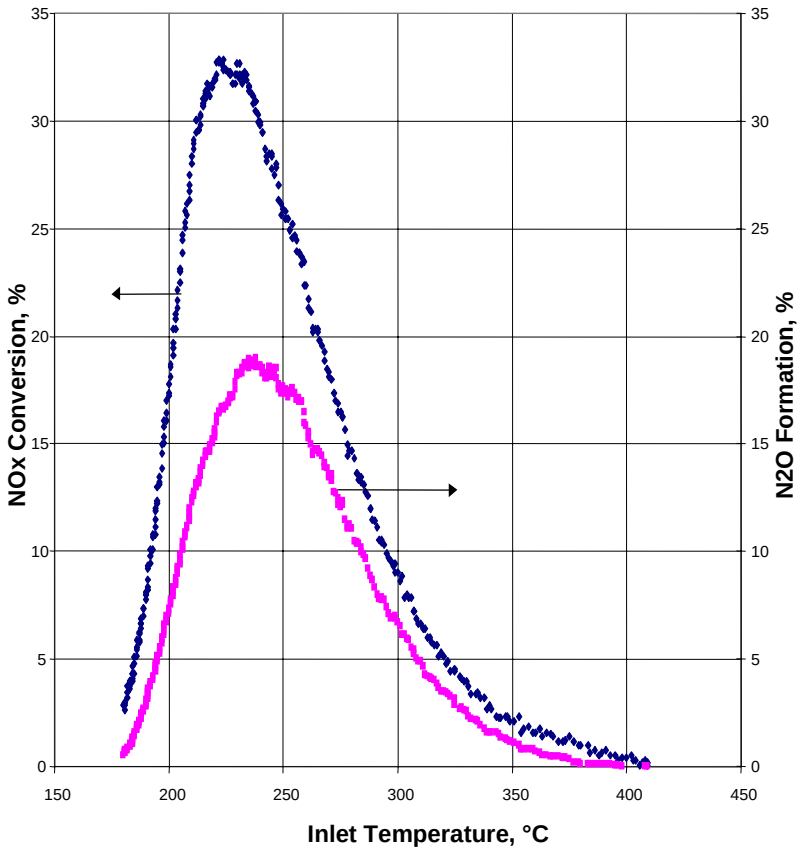

Negatives

- High NO_x conversion to N_2O (about 50%-60% of the NO_x reduced), N_2O is a greenhouse gas
- High sulfate formation rates at high temperature for high sulfur fuel. Not an issue with future ultra low sulfur fuel
- Need combination of different catalyst to cover the whole exhaust temperature range for FTP-75 and US06 cycles

Plasma Assisted Catalytic Reduction (PACR)

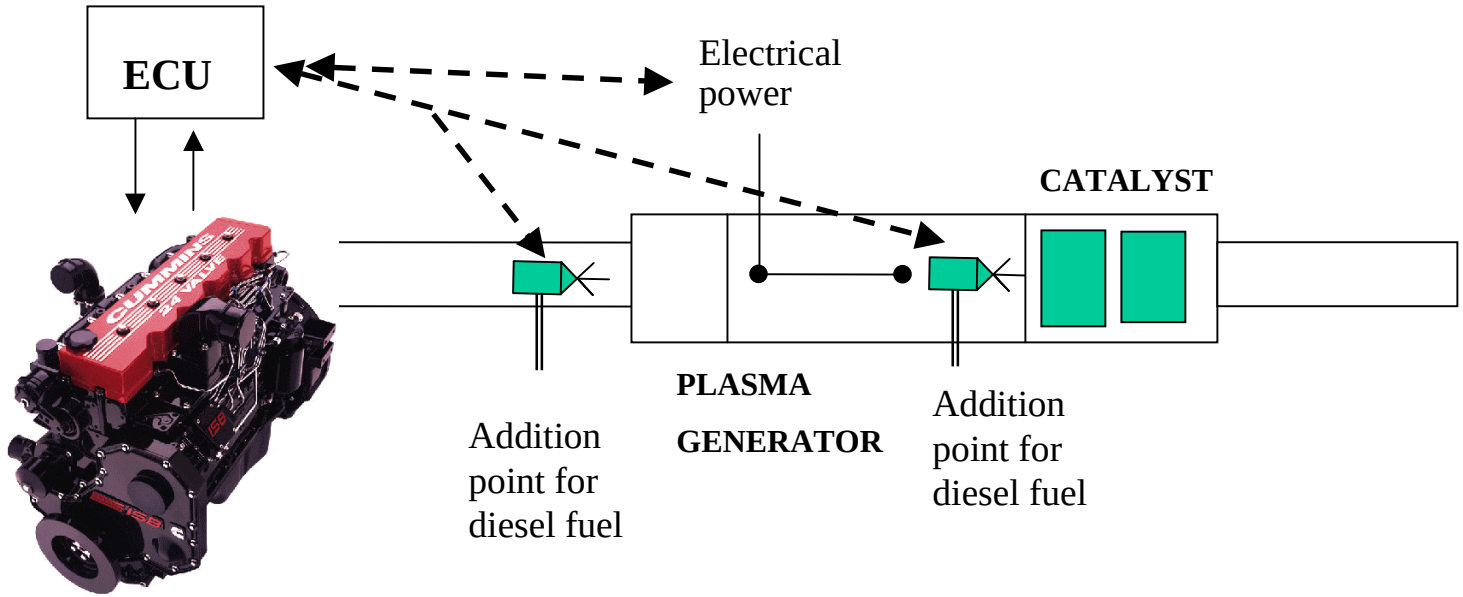

- Plasma converts NO to NO_2
- HC added to exhaust or in cylinder enhances this process
- Activated HC reduces NO_2 over catalyst

Technology Status - PACR

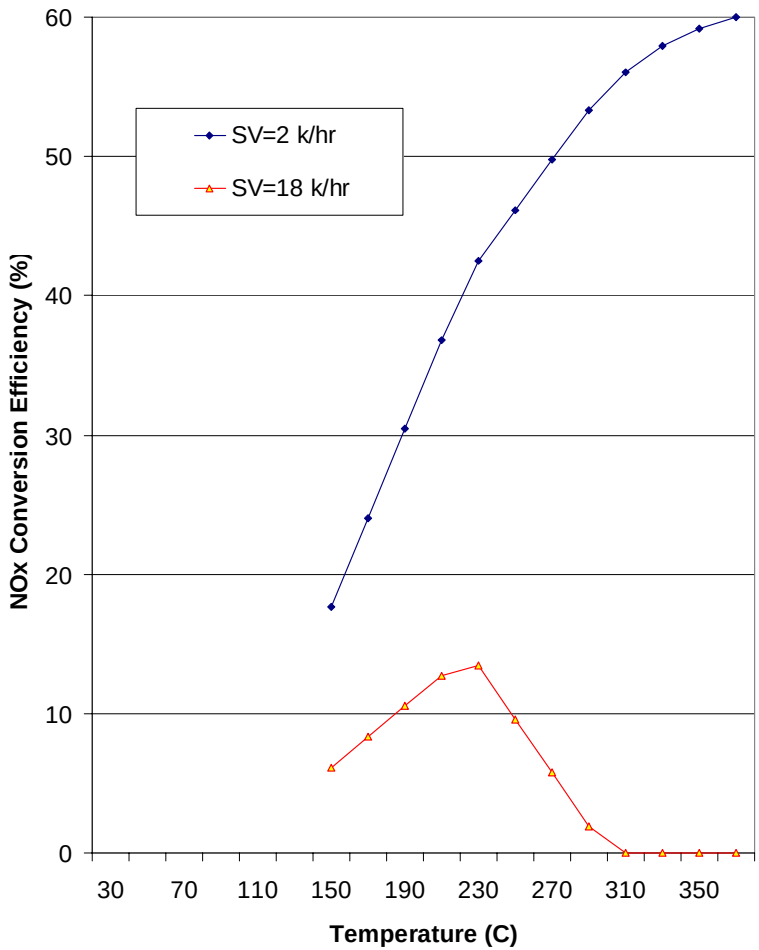

Positives

- Conversion of NO to NO_2 at low temperatures, without SO_2 to SO_3 oxidation
- Can enhance NO_x conversion at low temperatures on other NO_x aftertreatment technologies
- Can use Diesel Fuel as reductant
- Simple reductant injection strategy, similar to SCR-HC

Technology Status - PACR

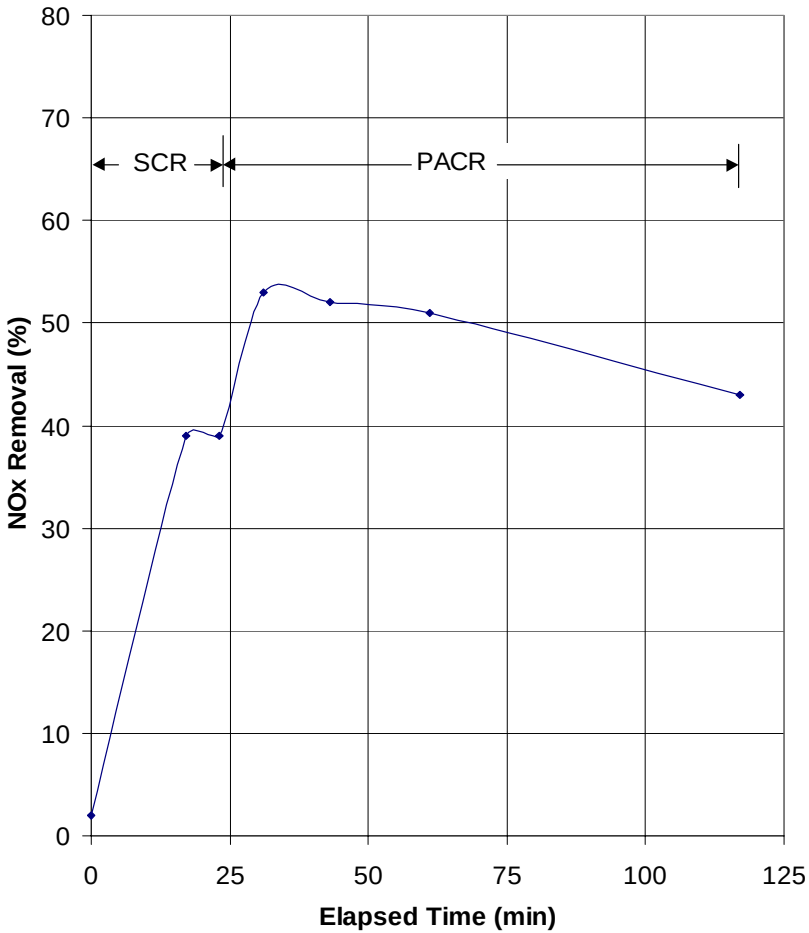

Negatives

- Additional power required for Plasma generation
- Very low space velocity/very large catalyst volume required for high conversion efficiency, a 40% NO_x reduction was achieved with 90 L Gamma-Alumina catalyst
- Potential safety issues due to high voltage / possible EMI generation
- Benefit of non-thermal plasma decreases as the temperature is increased. No benefit was observed at temperatures greater than 300^0 C
- Evidence of NO_x adsorption as significant NO_x consumption pathway

NOx Adsorber Catalyst

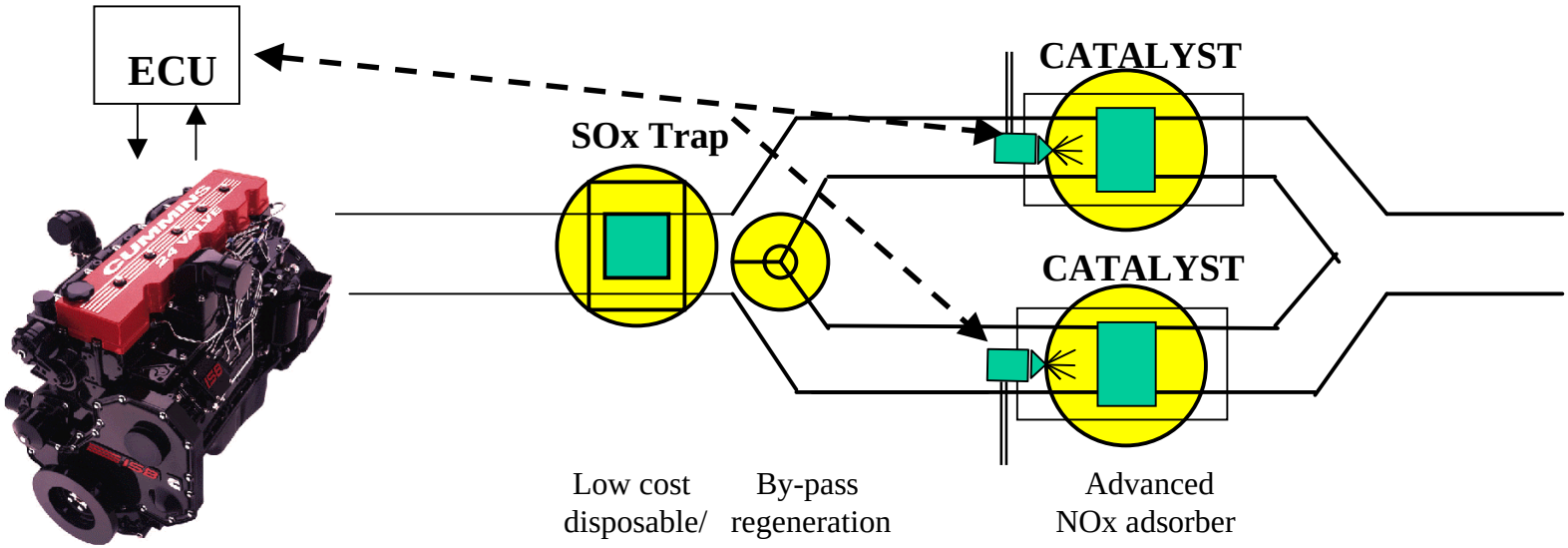

Low cost disposable/ serviceable SOx trap

By-pass regeneration for minimal fuel economy penalty

Advanced NOx adsorber catalyst

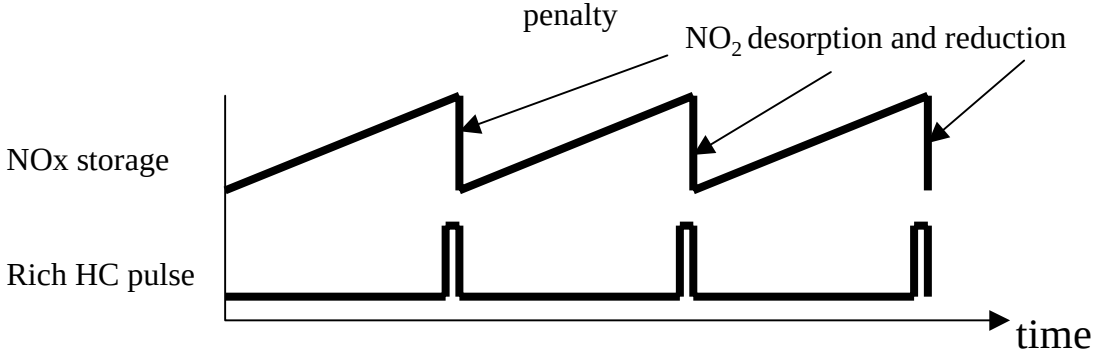

Technology Status - NO_x Adsorber

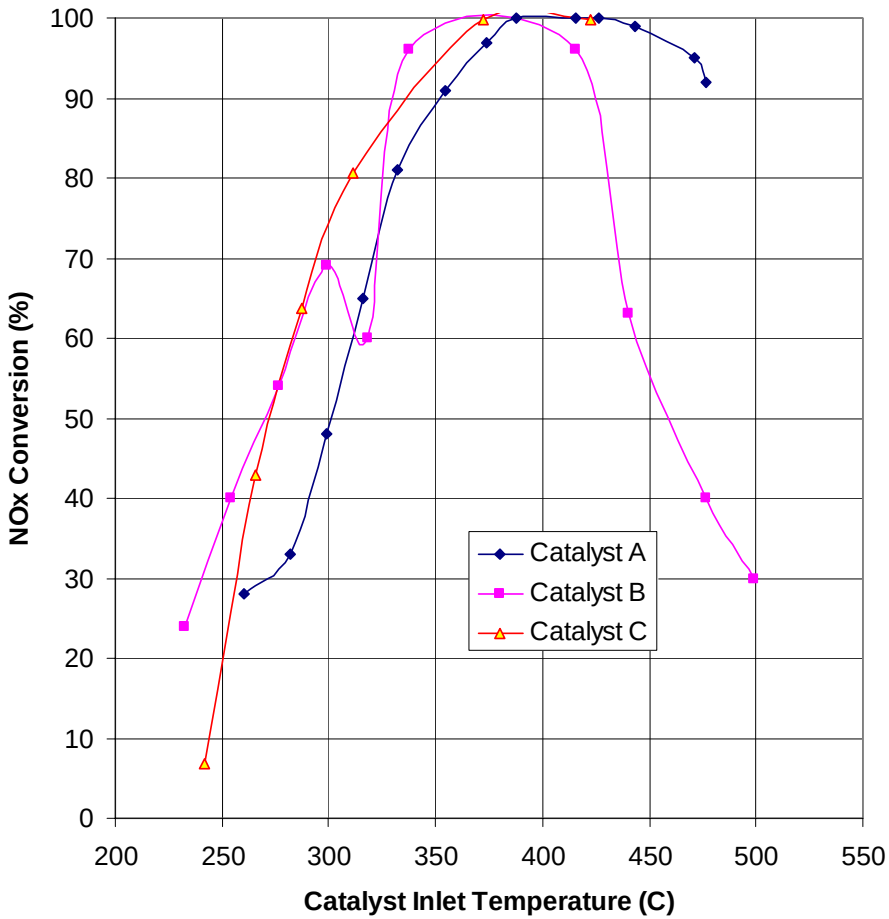

Positives

- Potential for high NO_x conversion (>88%)
- Wide temperature range of peak operation (330 deg C to 450 deg C)
- Can use diesel fuel as reductant - easier enforcement/anti-tampering control
- No infrastructure issues (as with urea distribution)

Technology Status - NO_x Adsorber

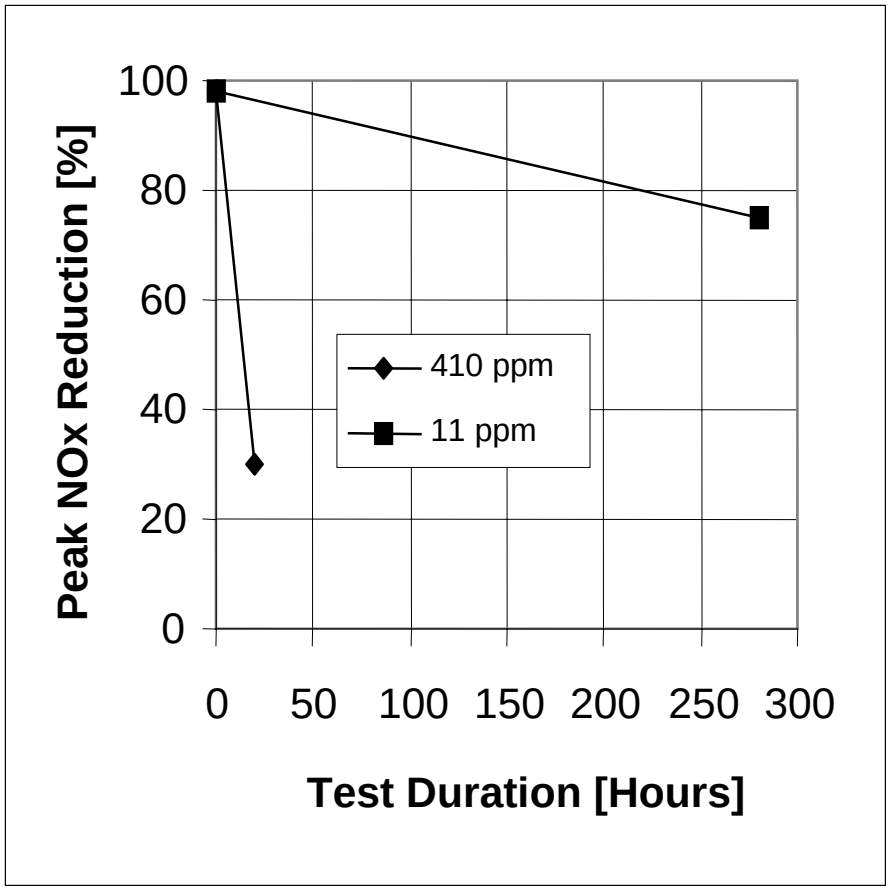

Negatives

- Still requires formulation improvement/active control of exhaust temperature.
- Rapidly poisoned by sulfur in the fuel and lube, a sulfur trap will be required
- Rich operation of injected hydrocarbon leading to high fuel penalty, HC slip, and SOF particulate
- Partial flow regeneration adds complexity but offers lower fuel economy penalty
- Complex reductant injection / control system

3.2 g/kW-hr $BSNO_x$ Engine Out

	Program Emissions Target Capability	Reliability	Fuel Economy	Up Front Cost	Service Interval/ Service Hassle	Size/ Weight	Composite Score
Weighting Factor		10	9	9	7	5	
PACR	No	3	3	3	3	2	0
SCR-HC	No	5	5	5	5	5	0
NOx Adsorber	Yes	4	5	4	3	4	162

5 = Best 1 = Worst

Impact of System Configuration Arrangement

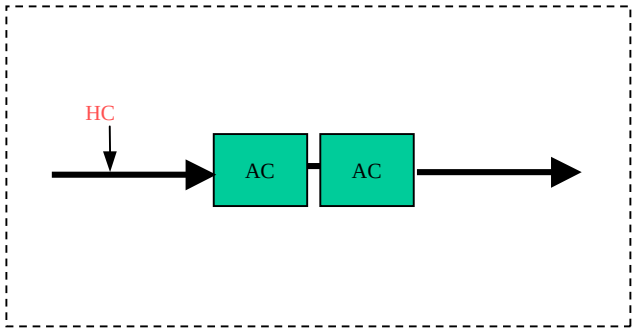

Full Flow

VS

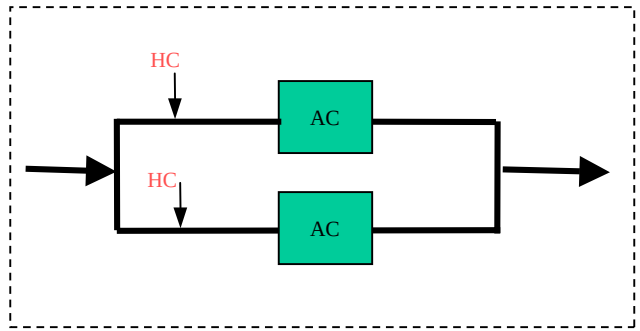

By-pass

Impact of By-pass System on Fuel Economy Penalty

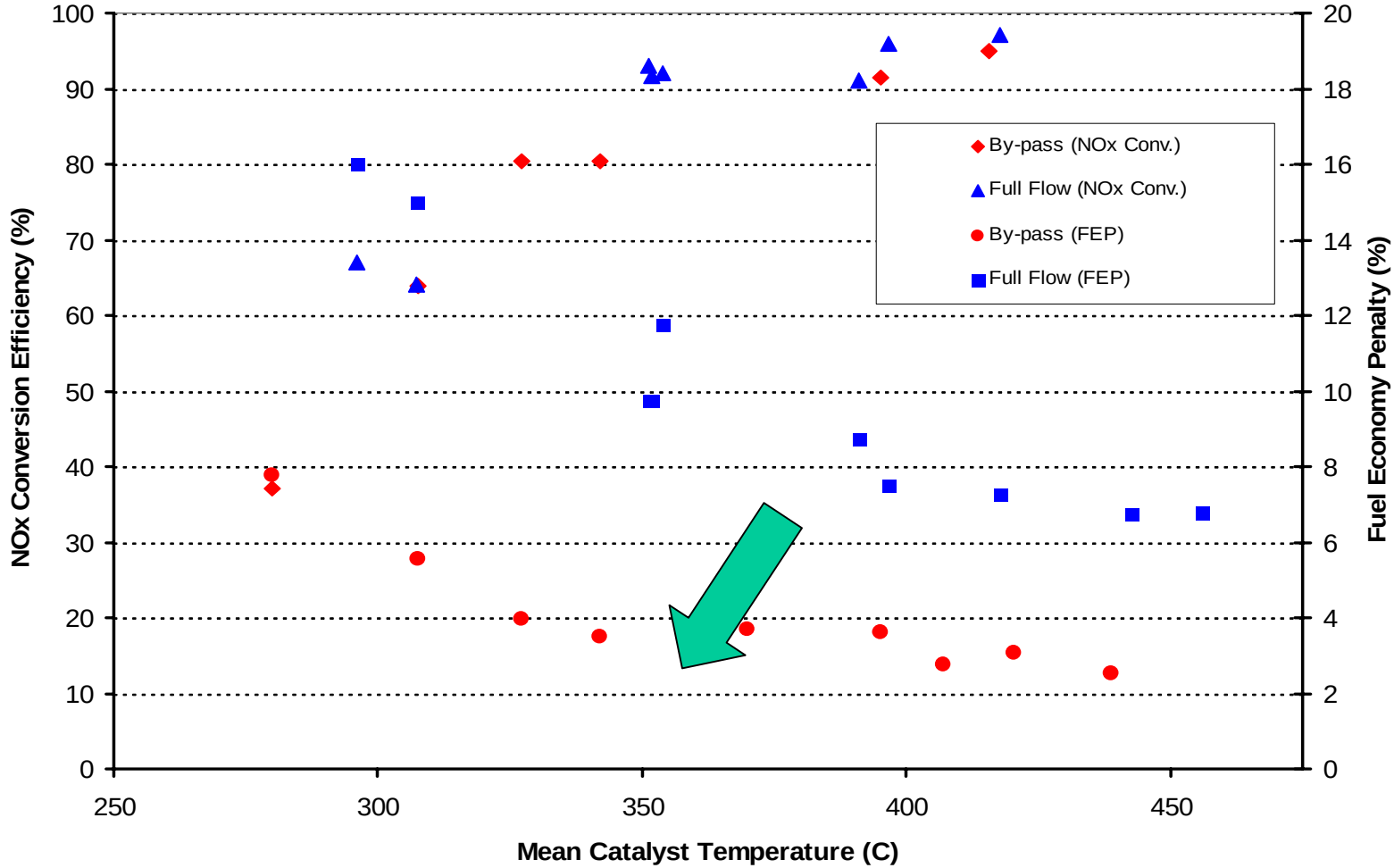

Sulfur Management - NO_x Adsorber Degradation

- SO_x competes for active NO_x adsorption and precious metal oxidation sites
- SO_x combines with adsorber sites to form thermodynamically stable compounds that require extremely high temperatures (>650 ^oC) and reductant to regenerate the adsorber
- The stability of the noble metal component can be effected at >650 ^oC due to the close proximity to the NO_x storage component (typically alkaline or alkaline-earth elements)
- NOx adsorber conversion efficiency decreases at a rate of approximately 0.1 % per hour with 11 ppm sulfur fuel without a sulfur trap
- In addition to fuel sulfur content, the sulfur in the lube oil also plays a major role in adsorber sulfur loading and performance degradation

Contribution of Lube Oil to Exhaust S Concentration

(Arco EC-D Fuel, Premium Blue Engine Oil)

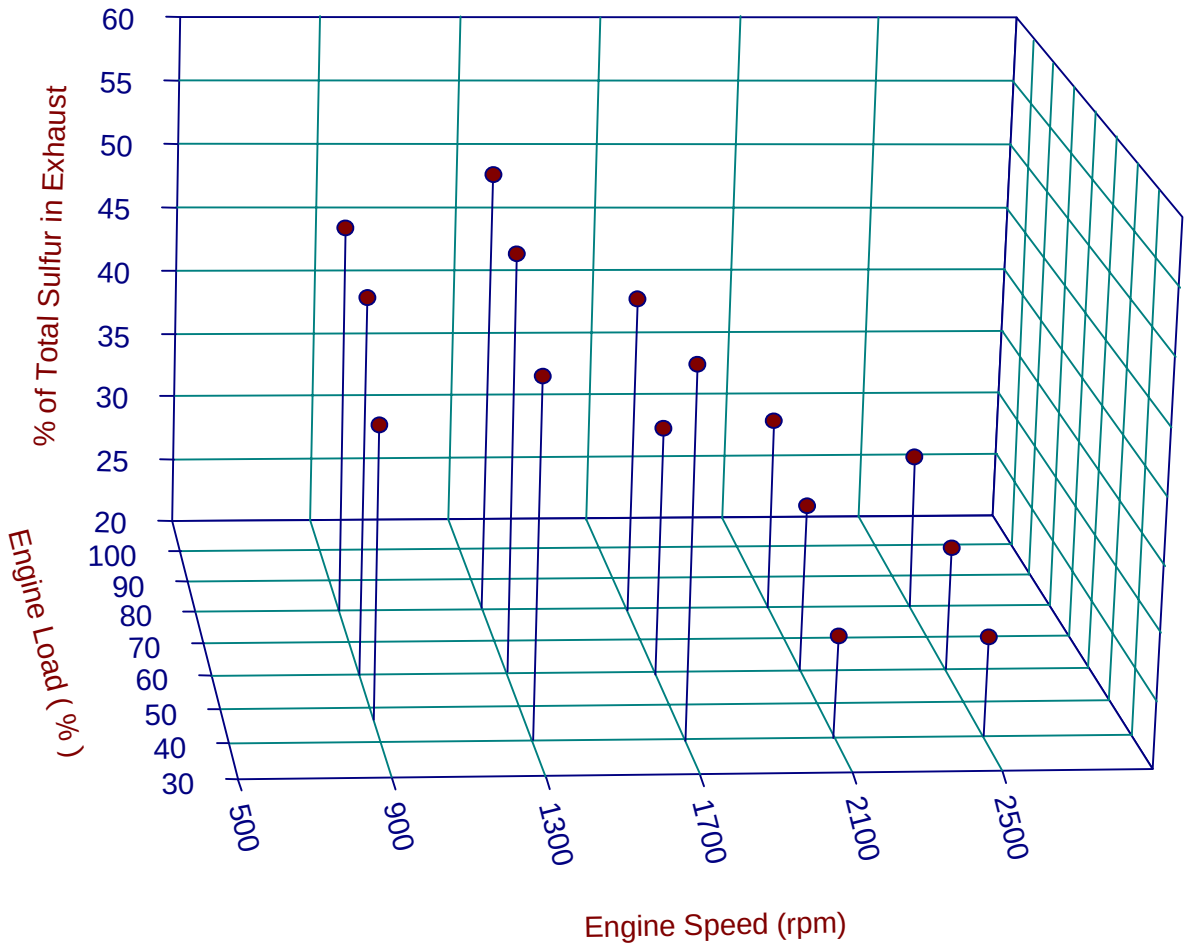

NOx Adsorber Sulfur Management Strategy

Disposable/Offline Regenerable

- High adsorption capacity for sulfur.
- High selectivity toward sulfur adsorption
- No release of secondary emissions from trap
- Usable life of SOx trap is dependent on Sulfur level in fuel and lube oil
- Good protection of adsorber catalyst from sulfur poisoning during miss-fueling
- Potential technology for light duty applications-small size, low cost, and limited useful life requirement

NOx Adsorber Desulfation Catalyst

- Integrated NOx trap and sulfur trap function on one catalyst, does not require separate SOx trap
- Requires on-board high temperature exhaust management to release sulfur from catalyst (>650 deg C)
- Additional fuel penalty will be incurred during desulfation process
- Desulfation involves release of secondary emissions hydrogen sulfide and/or sulfur dioxides
- Catalyst material development required compromise among NOx storage & conversion, SOx storage & release, and catalyst thermal durability, and etc

Sulfur Trap Replacement / Offline Regeneration Interval

(10 ppm Fuel Sulfur)

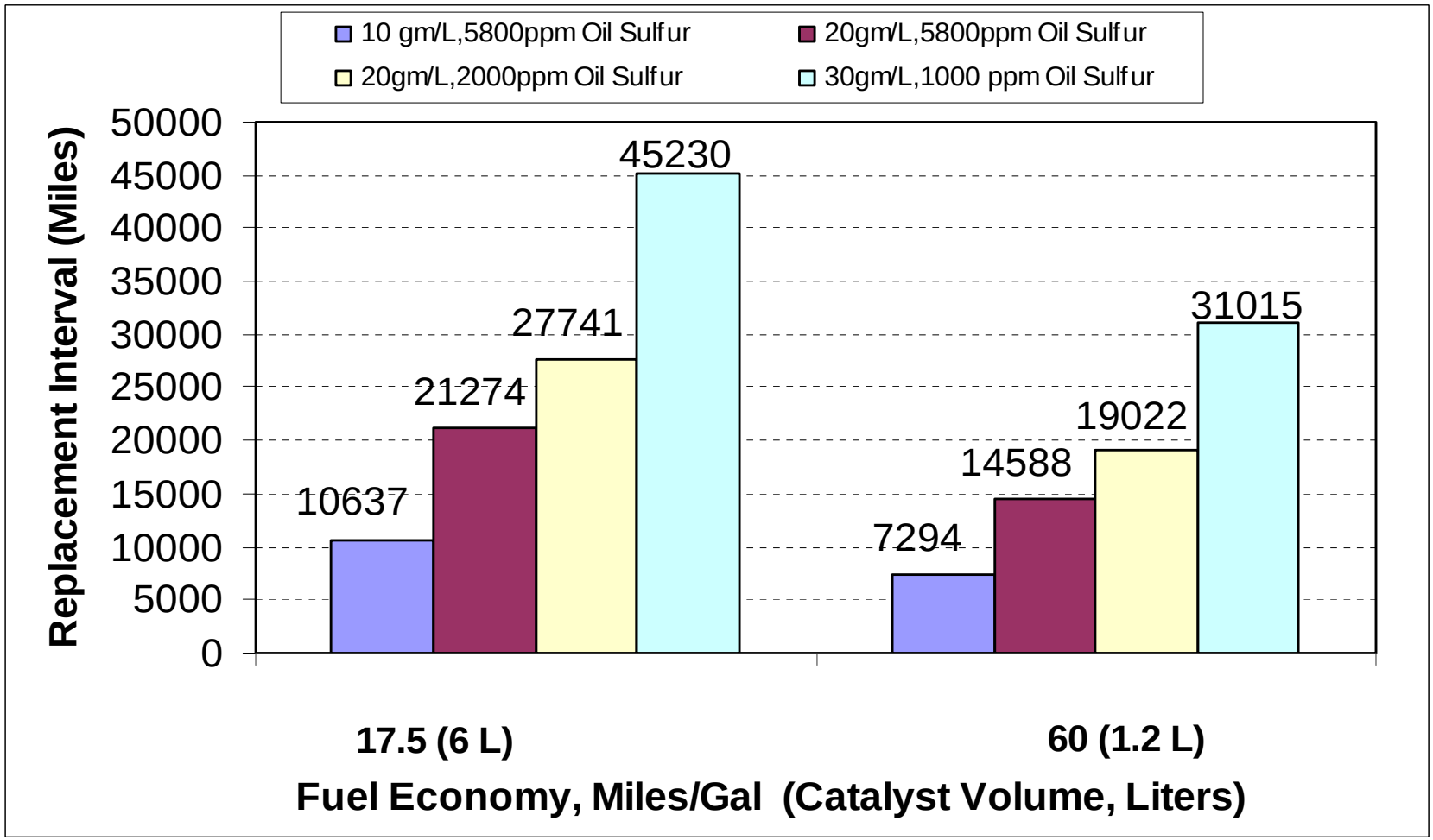

NOx Conversion Efficiency vs Fuel Injection Penalty Development Status
(Simulated FTP-75, Breadboard ISB with NOx Adsorber / DPF System)

Pre-Conditioning	No	No	No	No	Yes
Exh Temp Mgmt.	No	Yes	Yes	Yes	Yes
DPF	No	No	Yes	Yes	Yes
Configuration	Full Flow	Full Flow	Full Flow	Bypass	Bypass

Summary

- The best NOx control approach for LDV and LDT applications is a NOx adsorber catalyst system. A greater than 88% NOx reduction efficiency is required to achieve 0.07 g/mile Tier II emissions standard. Active lean NOx and PACR technologies are currently not capable.

- The NOx conversion verse temperature curves are identical between LDV and LDT engines. This suggest that a fundamental and “displacement-size” transparent understanding can be made on EAS technology development.

- Demonstrated a 40% to 50% reduction in fuel injection penalty with a by-pass regeneration strategy as compared to a full flow regeneration strategy over a simulated FTP-75 emission cycle. A by-pass regeneration system will be needed to achieve the lowest fuel injection penalty.

Summary- Continued

- In addition to the fuel sulfur content, the sulfur in the oil also plays a major role in adsorber sulfur loading and performance degradation. A low sulfur oil is required to prolong the life of adsorber from sulfur poisoning.

- 84% NOx and 95% PM conversion efficiencies have been achieved with a breadboard low emission ISB engine and an adsorber/CSF exhaust configuration on the simulated FTP-75 emission cycle.

- Much work remains for real world implementation.
  - Durability of devices such as regeneration hardware/sulfur poisoning/ thermal degradation/catalyst masking
  - Transient control/OBD
  - Cost and size of the system