Plasma-Catalysis During Temperature Transient Testing

by
John Hoard
Ford Research Laboratory

ABSTRACT

A combination of catalysts is used together with nonthermal plasma in simulated diesel exhaust, while the gas temperature is varied. The catalysts both store and convert pollutants. As a result, pollutant concentrations during temperature ramps are different than those at steady state conditions. The data are presented for plasma followed by BaY, alumina, and Pt catalysts in simulated exhaust.

When temperature ramps from high to low, apparent NOx conversion is quite high. However, when temperature is ramped from low to high, lower apparent conversions are seen. In a typical test cycle, average NOx conversion between 100 and 400°C is 60%. Peak conversion during the down ramp is over 90%, and minimum conversion during the up ramp is 30%.

The composition of the effluent gas also varies during the temperature cycle. Intermediates such as methyl nitrate and hydrogen cyanide are not present following the combination of catalysts.

EXPERIMENTAL

A set of tests was run using simulated exhaust gas treated by plasma and catalysts, while the catalyst temperature was varied. Figure 1 is a schematic of the laboratory setup. Bottled gases (BOC or Michigan Airgas, ultra-high purity) are mixed using mass flow controllers (MKS). The mixed gases are passed over a heated wick onto which liquid water is pumped; this provides a steady water concentration by avoiding drips from the water introduction tube.

The mixed and humidified gas is conducted through stainless steel lines heated to 100-120°C in order to reduce adsorption of gasses onto the tube walls. Two ovens are used in series, with provision to sample the test gas before, between, or after the ovens.

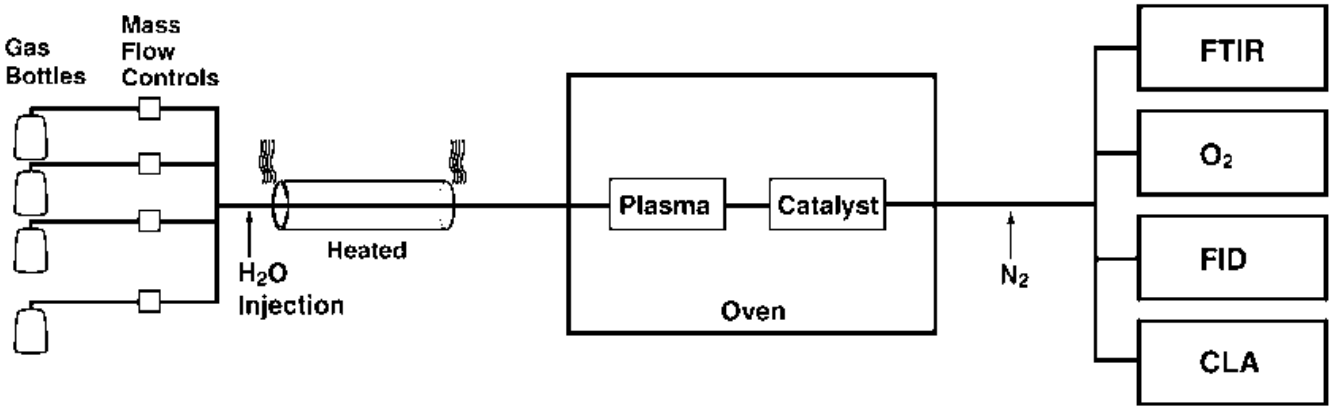

Figure 1 Schematic laboratory layout. For some tests, multiple ovens are used.

The first oven has a simple dielectric barrier discharge device (DBD) consisting of two parallel alumina plates with embedded electrodes, described previously (1). In these experiments, this oven is held constant at 180°C. This temperature is chosen because it is typical of a light-duty diesel engine vehicle on an emission test cycle. The plasma is operated at 150,000 hr^{-1} space velocity (SV). A Trek Model 10/10 Amplifier driven by an HP 33120A Function Generator generates a triangular wave to provide electrical power. Frequency and amplitude were varied to suit test conditions; voltage was generally in the range of 7-12 kV peak-to-peak, and frequency in the range 62-500 Hz. Plasma voltage was measured using a Tektronix P6015A high voltage probe. Current was measured using a 1000 Ohm current sense resistor in series with the plasma device. Both signals were recorded on a Tektronix TDS420A oscilloscope.

The second oven has one or more test catalysts contained in a quartz tube. BaY, alumina, and Pt catalysts were placed in the second oven. This second oven can be programmed for temperature ramps up or down as desired.

Following the ovens, the treated exhaust gas is mixed with nitrogen (BOC Gas 99.99999% purity, from liquid nitrogen) in a dilution ratio of 5:1. This reduces the water concentration below 1% so that water condensation does not occur at room temperature, and increases the total flow rate to improve instrument response times. This method is advantageous over water traps or permeable barrier gas dryers in that it does not risk removing any gases that may be formed by the plasma or catalysts.

The flow rate was 4 L/min through the plasma and catalysts, and 20 L/min through the instruments. All reported data has been corrected for the 5:1 dilution, and is reported as the concentration that existed in the reactor.

GAS ANALYSIS - Two sets of analysis equipment were used in this study. The primary instrument is an FTIR; conventional automotive emission analyzers were also available.

The Fourier Transform Infrared (FTIR) Analyzer is a Mattson Nova Cygni 120 equipped with a Foxboro 20 Metre gas cell. This system is operated at 0.25 wavenumber resolution, 21.75-meter path length and room temperature. Ford proprietary software is used to collect one sample spectrum each 1.5 seconds; in this report, all FTIR data is presented averaged over 50 samples (i.e., 75 second sample period). Spectra are processed into gas concentrations in real time, and can also be post-processed. Reference spectra were prepared in the Ford Research Laboratory.

Conventional emission analyzers were Horiba:

- AIA-210 IR analyzers for CO and CO_2
- FIA-220 Flame Ionization Detector for HC
- MPA-220 Magneto-Pneumatic Analyzer for O_2
- CLA-220 Chemiluminescent NOx Analyzer for NOx

The NOx analyzer is operated in the NOx position, where the gas passes through a heated catalyst to convert NO_2 – and possibly other species – into NO that is then read by the analyzer. Unlike certain other analyzers (2) it does not have interference from aldehydes. It does respond to HNO_3 and partially to CH_3ONO_2.

The Horiba analyzers are connected downstream of the FTIR. Horiba data are sampled at 10 second intervals, and FTIR data are sampled at 1.5 second intervals and averaged over 50 samples or 75 second period. In plots of data, the Horiba data is time-adjusted to compensate for the transport delay time, roughly 280 seconds.

Catalyst temperature was measured by a bare-bead thermocouple in approximately the center of the alumina pellet bed. It is recognized that there will be temperature gradients in the flow direction and in the transverse direction during temperature ramps, but these were not measured.

CATALYSTS - The BaY catalyst is a barium zeolite-Y monolith. Pacific Northwest National Lab provided this catalyst; the method for preparation and coating is proprietary. The powder was wash coated onto a 600 cell per

square inch cordierite monolith. Zeolite loading was 39 weight percent. The monolith was 19 mm diameter and 52 mm long, giving SV 16,300 hr^{-1}.

The alumina catalyst is in pellets. High-purity gamma alumina (Condea Vista CATALOX® Sba-200) is obtained as a powder. The powder is pressed into a cake that is then broken into fragments and sieved to obtain a granular catalyst of roughly 1 mm size. BET area is 179 m^2/gram. 4.5 grams of catalyst were loaded into a volume 27 mm diameter by 21 mm long, and retained by the BaY and Pt monoliths. SV was 19,960 hr^{-1}.

Pt catalyst is a proprietary formulation provided by Johnson Matthey, as used in their Continuously Regenerating Trap (CRT) diesel particulate control system. It is generically Pt loaded on alumina, and the detailed formulation is proprietary. The monolith was 18 mm diameter by 25 mm long giving SV 18,860.

The space velocity of the three catalysts together was 7,200 hr^{-1}.

The gas composition used is shown in Table 1. The ratio of carbon atoms in the HC to molecules of NOx (HC_1:NOx ratio) is also shown in the table. This ratio is higher than usual for engine-out exhaust, and assumes HC will be added to enhance aftertreatment efficiency. This can be done either by post-injection in the cylinder or by adding fuel to the exhaust. It should be noted that high EGR rates in diesel engines reduce NOx while increasing HC (and particulate), and thus improve NOx emissions both through direct lowering of engine-out NOx and through improved HC_1:NOx ratio for aftertreatment.

The rather high HC_1:NOx ratio used here was chosen because of storage effects on the catalysts and will be discussed below.

Engine-out NOx is primarily NO. However, in the presence of excess O_2, NO oxidizes in the gas phase to NO_2. Thus, at light loads and low speeds as much as 25-50% of NOx at the vehicle tailpipe is NO_2 (3). In these experiments, NOx was provided from a bottle of NO in N_2. The NO_2 level shown in the table is the result of gas phase oxidation in the heated sample lines between mixing and measurement locations.

This simplified blend does not include several constituents usually found in exhaust gas: CO, CO_2, H_2, and a large number of hydrocarbon compounds. This is for clarity in the results; previous testing has shown little effect of these gasses, and leaving them out makes the remaining gas easier to analyze. C_3H_6 is used for convenience even though it is representative of only a part of diesel exhaust HC composition.

Gas	***Unit***	***Input***
NO	ppm	74
NO_2	ppm	2
C_3H_6	ppmC_1	1951
HC_1:NOx	ratio	26
H_2O	%	3
O_2	%	7
N_2		Balance
Plasma Energy	J/L	15
Gas Flow	L/min	4

Table 1 Gas composition and plasma energy

TEST RESULTS

When the catalyst temperature is ramped up the first time, there is desorption from compounds stored in previous testing. As a result, the first up/down loop tends to be fairly unrepeatable. In this paper, we have shown data for the fourth cycle of a test series. We find the second, third and fourth loops repeat quite well, and have shown only the last loop for clarity in the plots. With the temperature ramped at 10 degrees per minute, each loop takes roughly one hour.

Figure 2 shows temperature and NOx conversion versus time as measured by the chemiluminescent analyzer (CLA) and FTIR. NOx conversion is measured from input gas to

output after plasma and all three catalysts. Figure 3 shows the same data replotted with temperature as the independent axis. In this figure, the arrows indicate the direction of the temperature ramp.

In these figures, the FTIR data is the sum of all measured N-containing species except N_2O:

$NOx=NO+NO_2+HONO+HNO_3+CH_3ONO_2$.

NOx conversion averaged over the temperature cycle is about 60% as shown on Figure 3. This compares well with steady state NOx conversion reported by Panov et al (4) for BaY plus alumina catalyst with similar gas composition.

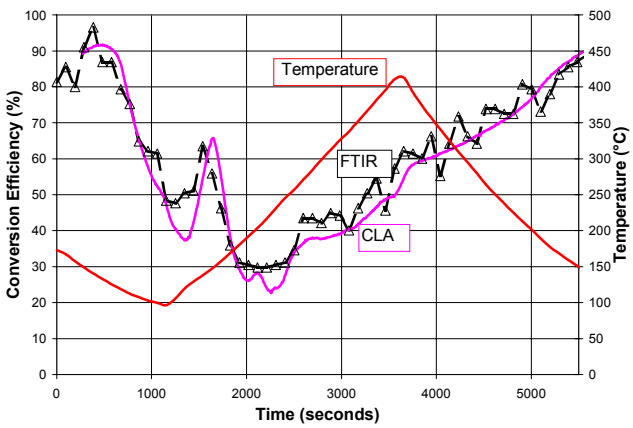

Figure 2 Temperature and NOx conversion versus time. CLA: chemiluminescent NOx analyzer. FTIR (triangles): Fourier Transform Infrared analyzer: see text.

Similar data for HC is shown in Figure 4. For the FTIR, HC is the sum of measured $H_xC_yO_z$ species:

$$HC = CH_4 + 2C_2H_2 + 2C_2H_4 + 2C_2H_6 + 3C_3H_6 + 3C_3H_8 + CH_3OH + 2C_2H_6OH + CH_3ONO_2 + CH_3ONO.$$

This value agrees quite well with the FID-measured values.

In these figures, it is apparent that there is significant storage; this causes the large hysteresis loops seen in the data. As temperature drops, NOx traps on the surfaces giving high apparent efficiency. When the temperature increases, lower apparent conversion is seen. Since stored NOx is released during the ramp up, a high HC_1:NOx ratio is needed to provide enough reductant for effective NOx conversion. We believe that NO_2 stores heavily on BaY at low temperature (in addition to conversion to N_2, as shown by Tonkyn et al (5)). As temperature increases, some of that NOx releases, and may be converted by the alumina and/or Pt catalysts provided there is enough reductant available.

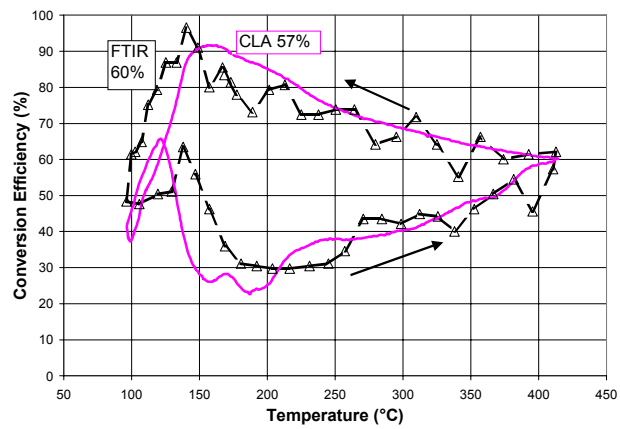

Figure 3 NOx conversion data from Figure 2, replotted versus temperature.

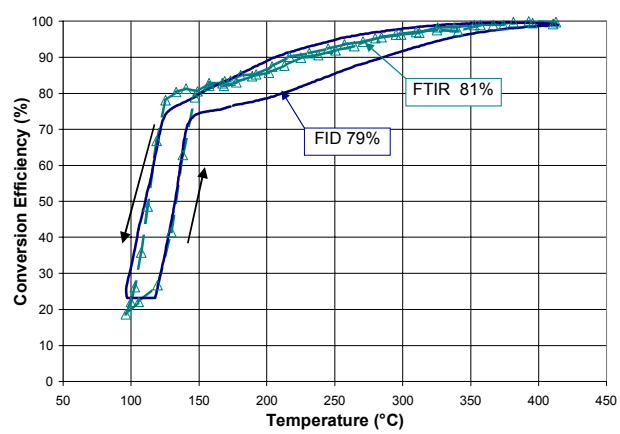

Figure 4 HC conversion versus temperature. FID: Horiba flame ionization detector. FTIR (triangles): see text.

Figure 5 shows plots for NO, NO_2 and N_2O after the catalysts. The complex mixture of storage and conversion results in varying NOx composition at the catalyst exit. It is likely that the N_2O formation around 150°C is related to NOx conversion on the Pt, since neither BaY nor alumina tends to make very much N_2O (4,5).

Previous work has shown formation of intermediates such as methyl nitrate and HCN

in plasma-catalysis (6). As shown in Figure 6, these compounds are effectively removed before leaving the combination of three catalysts.

Figure 5 NO, NO_2 (squares) and N_2O (triangles) concentrations after the catalysts.

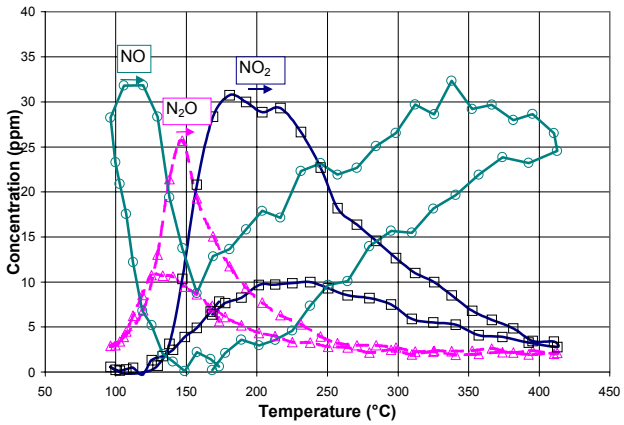

Figure 6 HCN and methyl nitrate (triangles) after the catalysts.

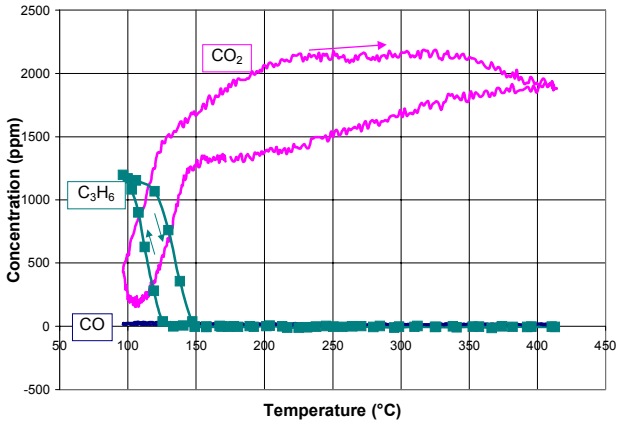

Figure 7 CO, CO_2 and propene (squares) concentrations after the catalysts.

Figure 7 shows CO, CO_2 and propene concentrations after the catalysts. There are no other measurable organic compounds present after the catalysts. A reasonable carbon balance is obtained above 150°C, showing that all the input HC has been oxidized to CO_2.

CONCLUSIONS:

1. Average NOx conversion between 100 and 400°C is 57-60%.
2. Average HC conversion between 100 and 400°C is 79-81%.
3. For many N and C species, there is significant adsorption and desorption, resulting in large hysteresis loops on the concentration-temperature plots.
4. Remaining NOx consists of NO, NO_2 and N_2O in relative quantities which depend on temperature.
5. The Pt catalyst removes HCN formed over the zeolites at temperatures as low as 100°C.
6. The Pt removes organic species such as propene, aldehydes and nitrates above 125°C.
7. The Pt catalyst removes CO formed in intermediate stages at all temperatures from 100 to 400°C.

REFERENCES

1. John Hoard and M. Lou Balmer, “Analysis of Plasma-Catalysis for Diesel NOx Remediation”, SAE paper 982429, 1998.
2. 6. Peter A. Gabele, “Investigation of Analyzer Problems in the Measurement NOx from Methanol Vehicles”. EPA report PB89-124374, 1988.
3. John Hilliard and Richard Wheeler, “Nitrogen Dioxide in Engine Exhaust”. SAE paper 790691 (1979).
4. A.G. Panov, R. Tonkyn, S. Yoon, A. Kolwaite, S. Barlow and M.L. Balmer, “Effect of Simulated Diesel Exhaust Gas Composition and Temperature on NOx reduction Behavior of Alumina and Zeolite Catalysts in Combination with Non-Thermal Plasma”, SAE paper 2000-01-2964.
5. R. Tonkyn et.al., “Lean NOx Reduction in Two Stages : Non-thermal Plasma Followed by Heterogeneous Catalysis”, SAE paper 2000-01-2896.
6. John Hoard & Alexander Panov, “Products and Intermediates in Plasma-Catalyst Treatment of Simulated Diesel Exhaust”. SAE paper 2001-01-3512 (in press).

ACKNOWLEDGEMENTS

Portions of this work were performed under a CRADA with the Low Emission Technologies Research and Development Partnership. The authors gratefully acknowledge the DOE Energy Efficiency Office of Advanced Automotive Technology and Laboratory Technology research for support of this program. The research described in this paper was performed at the Ford Research Laboratory.

CONTACT

John Hoard
Ford Research Laboratory
PO Box 2053 MD3083SRL
Dearborn, MI, 48124
Phone (313) 594-1316
e-mail jhoard@ford.com