On the Road in 2020: An Assessment of Future Transportation Technology

John B. Heywood
Director, Sloan Automotive Laboratory
Massachusetts Institute of Technology

7th Diesel Engine Emissions Reduction Workshop

Portsmouth, VA
August 5-9, 2001

Recent automotive technology assessment

ON THE ROAD IN 2020

A Life Cycle Analysis of New

Automobile Technologies

M.A. Weiss, J.B. Heywood, E.M. Drake, A. Schafer, F.F. AuYeung

MIT Energy Laboratory Report

#MIT EL 00-003

October 2000

(http://web.mit.edu/energylab/www/)

Objectives

1. Assess the relative performance of future light-duty vehicle technology and fuels, some 20 years from now.

2. Focus on energy consumption, CO_2 emissions, and cost.

3. Do this on a “well to wheels” basis: energy source through vehicle use and scrappage.

4. Assess the relative attractive of these technologies and fuels to all the major stakeholders.

5. Start by focusing on vehicle and propulsion system technology.

Fuel and Vehicle Technology

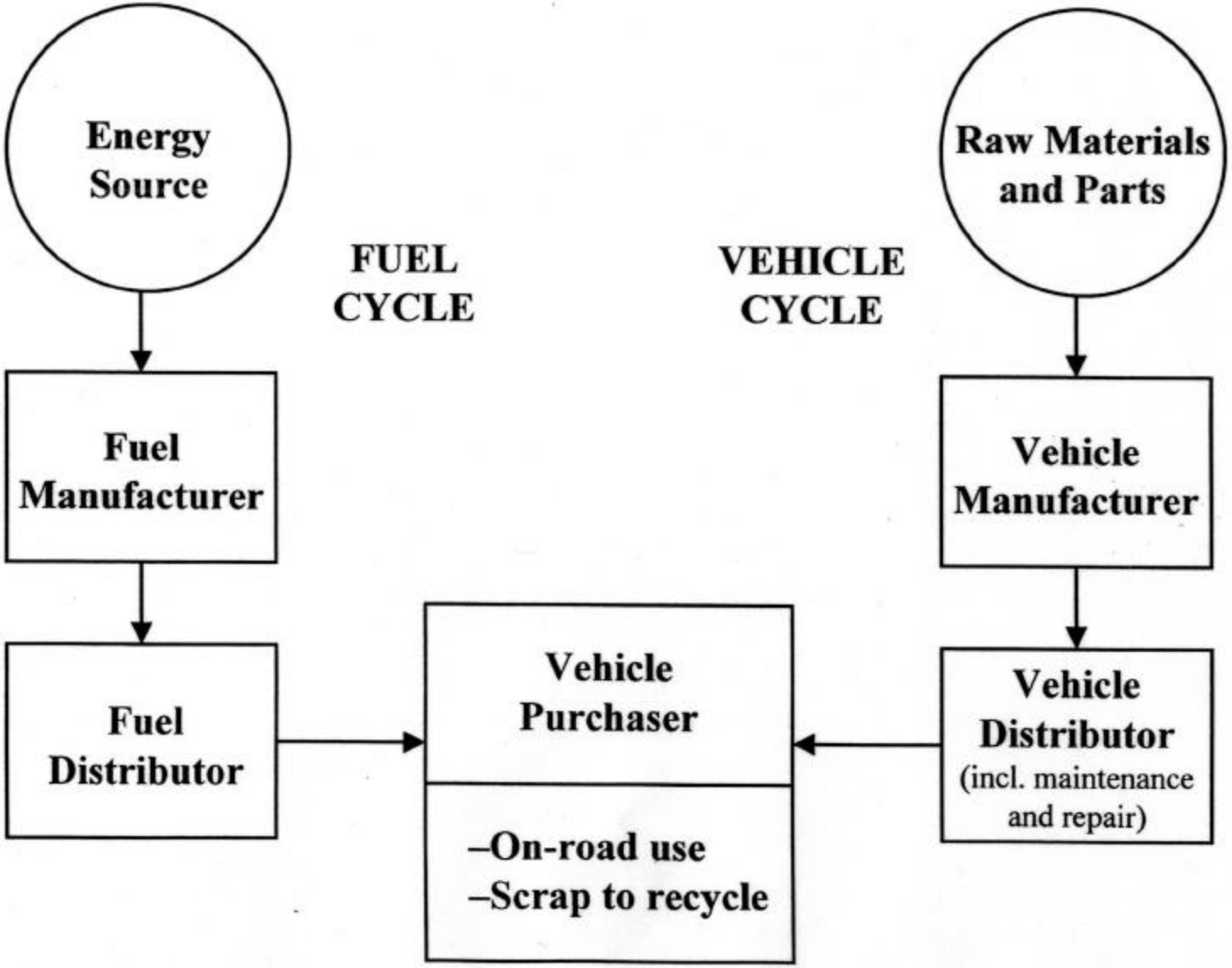

Approach

1. Fuels
   - Assess energy consumption, emissions and costs

In delivering fuel to vehicle

2. Vehicles
   - Use propulsion system, vehicle, drive cycle simulation to predicts performance
   - Evaluate a set of promising fuel, propulsion system and vehicle technology combinations
   - Match attributes of current average car (Toyota Camry)

3. Total system
   - Combine fuel production, vehicle production, and vehicle use costs, energy consumption , CO_2
   - Use templates (lists of relevant attributes) for all major stakeholders to assess likely impact

Important Propulsion System Attributes

1. Specific power (bulk size or weight/power): performance
2. Specific cost (cost/power)
3. Driveability (start-up and drive-away time, smooth variations in torque and speed)
4. Fuel economy
5. Robustness, durability, maintainability
6. Range and refueling time
7. Emissions
8. Safety

Technology Options

1. Improved mainstream technologies
   - Vehicle: better conventional materials (e.g. high strength steel, lower drag
   - Engine: higher power/volume, improved efficiency, lighter weight
   - Transmission: more gears, automatic/manual, continuously variable
   - Fuel: cleaner gasoline and diesel

2. Advanced technologies
   - Vehicle: lightweight materials (e.g. aluminum, magnesium), lowest drag
   - Powertrain
     - Hybrids (engine plus energy storage)
     - Fuel cells (hydrogen fueled; liquid fueled with reformer)
   - Fuels: natural gas, biomass (alcohols), hydrogen

Calculation logic: ICE - battery electric parallel drivetrain

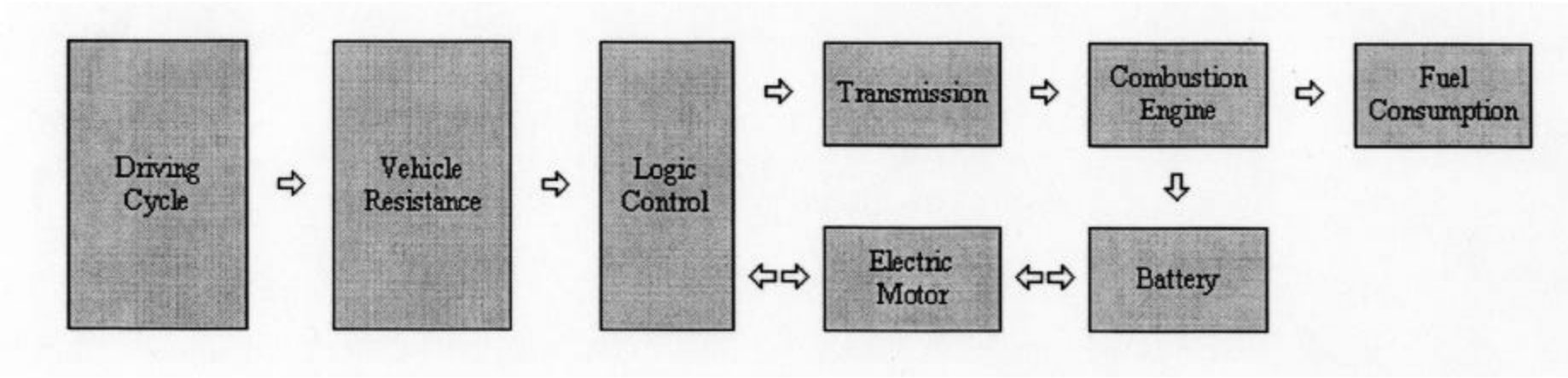

Vehicle Assumptions (2020)

1. Weight reduction

   Evolving: High strength steel, component scaling

   Advanced: Lighter weight materials (aluminum), component scaling

2. Drag reduction

   Current C_D, 0.33; Evolving (baseline) C_D, 0.27; Advanced C_D, 0.22

3. Tire resistance

   Current rolling resistance coefft., 0.009; Evolving RR coefft., 0.008; Advanced RR coefft., 0.006

4. Power to weight ratio: 75 W/kg (constant performance); interior volume constant (cross-sectional area fixed)

IC Engine Model and Assumptions

1. IC engine indicated efficiency assumed constant:
   - Current, 38% SI engine; 48% diesel
   - Future, 41% SI engine; 52% diesel

2. Engine friction assumed constant:
   - Current tfmep = 165 kPa SIE; 180 kPa diesel
   - Future 25% reduction, SIE; 15% diesel

3. Brake efficiency obtained from indicated efficiency and friction data.

4. Maximum torque and power scaled by extrapolating historical trends (e.g. 20% increase in max. power)

Performance maps for current and 2020 gasoline and diesel engines

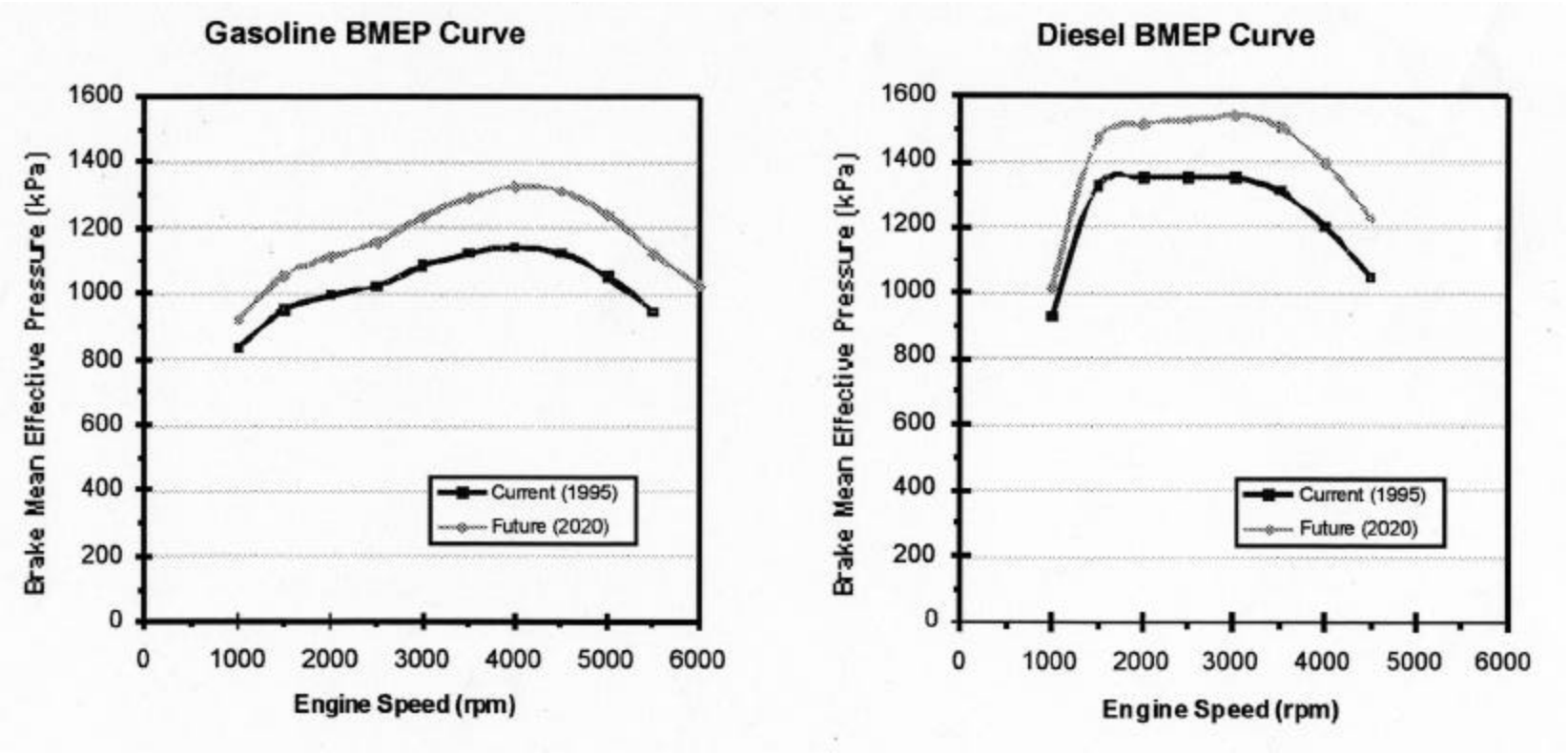

Mechanical and Electrical Transmissions

1. Current 4-speed automatic: 70% efficiency urban, 80% highway

2. Current 5-speed manual: 90% efficiency

3. Future 5-speed auto-shift clutch: 88% efficiency

4. Future continuously variable transmission: 88% efficiency

5. Electric: single ratio direct drive; efficiency varies with speed and power; average about 93%

(Kluger and Long, SAE Paper 1999-01-1259)

Battery Details

1. Current nickel metal hydride (NiMH): For EVs, specific energy 70 Wh/kg, specific power 150 W/kg; for HEVs, specific power 400 W/kg, specific energy 40 Wh/kg.

2. For 2020: For EVs, used Advanced Battery Consortium's commercial goals of 150 Wh/kg and 300 W/kg; for HEVs used 800 W/kg and 50 Wh/kg.

3. Lithium-ion batteries might meet the EV goals; HEV values within reach.

4. Cost is a major issue with these battery technologies.

Torque and Power Characteristics for a 60 kW Motor

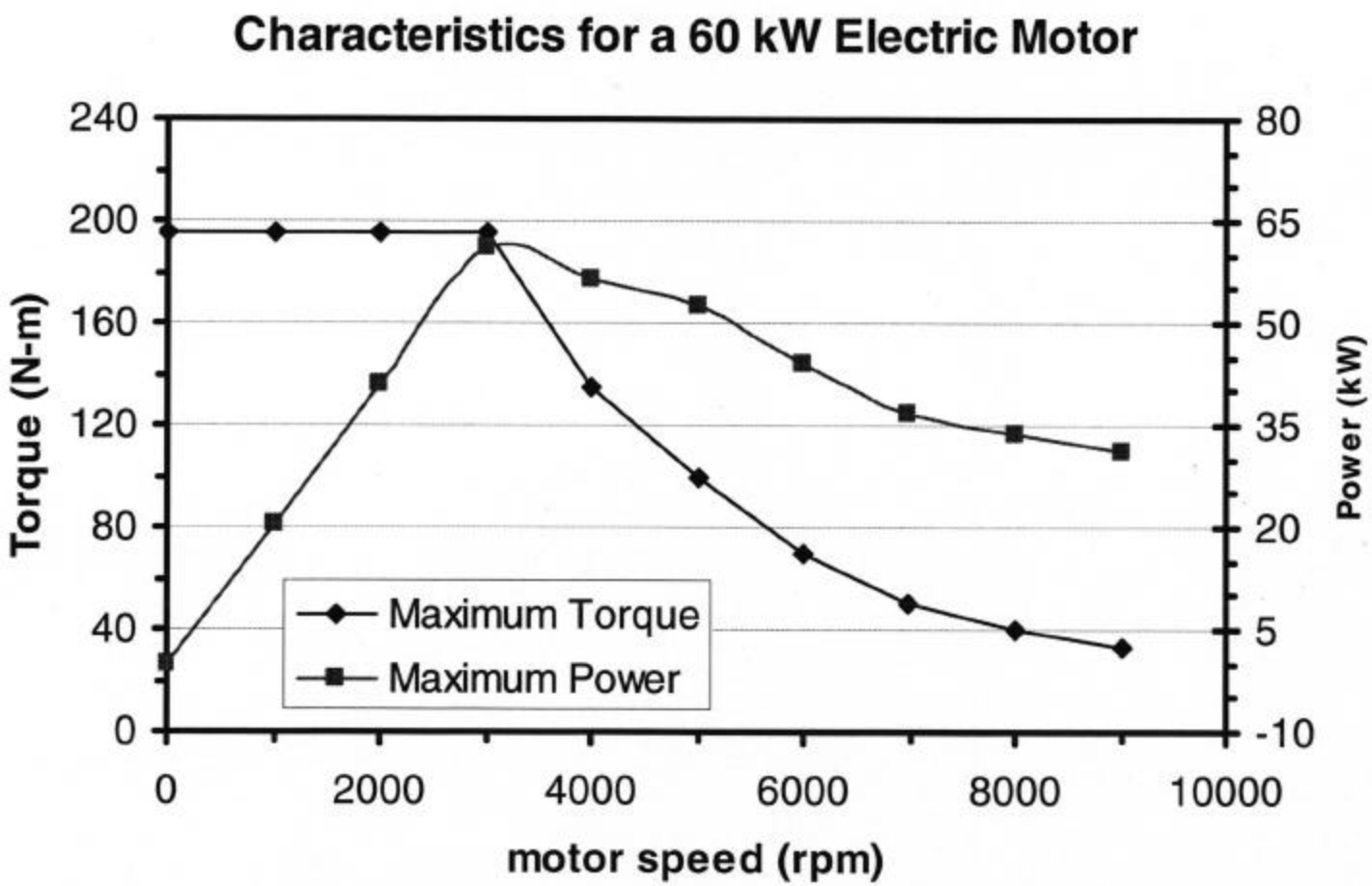

Fuel Cell Details

1. Used efficiency/output curve from Directed Technologies model (SAE 1999-01-0539)

2. With a reformer the hydrogen fuel is diluted, and cannot be fully utilized

3. Methanol reformer (82% efficient): exit stream 75% hydrogen, 10% power loss

4. Gasoline reformer (73% efficient): exit stream 40% hydrogen, 22% power loss

5. Reformer fuel cells have 85% hydrogen utilization

Fuel Cell Efficiency for a 60 kW Stack

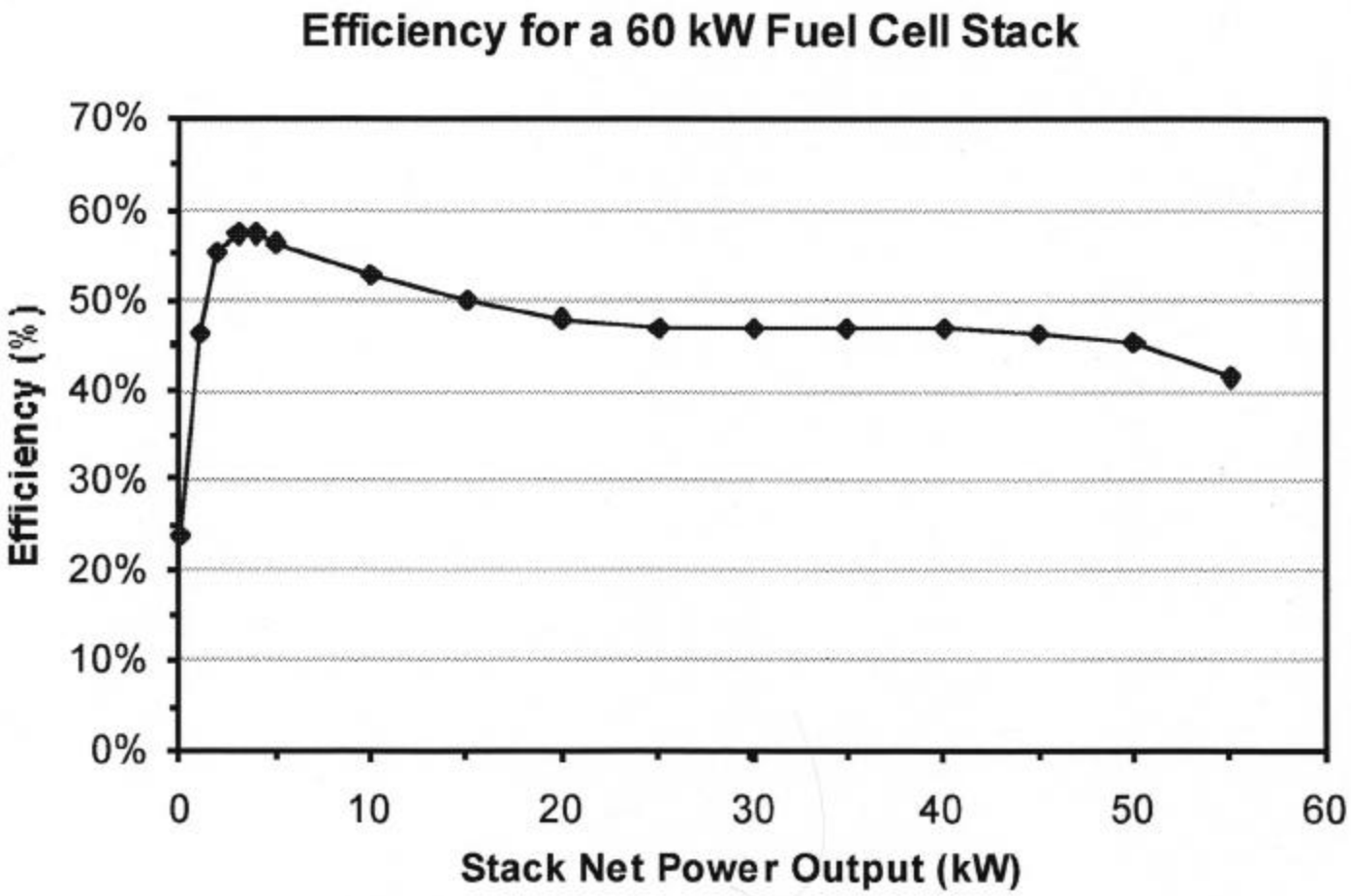

Summary of Vehicle Operating Fuel Consumption and Prices

2020 Vehicle Technology (except "Reference")	Fuel	Fuel Consumption mpg (gas. equiv.)	Fuel Consumption % of Base	Retail Price 1997$	Retail Price % of Base
1996 Reference, SI-ICE	Gasoline	28	155	17,200	96
Base case, evolutionary SI-ICE	Gasoline	43	100	18,000	100
Advanced SI-ICE	Gasoline	49	88	19,400	108
Advanced CI-ICE	Diesel	56	77	20,500	114
Hybrid SI-ICE	Gasoline	71	61	21,000	117
Hybrid CI-ICE	Diesel	82	52	22,100	123
Hybrid CNG-ICE	Nat. Gas	73	59	21,600	120
Hybrid reformer FC	Gasoline	42	102	23,400	130
Hybrid reformer FC	Methanol	57	76	23,200	129
Hybrid FC	Hydrogen	94	46	22,100	123
Battery electric	Electricity	149	29	27,000	150

Performance Potential in 2020

Technology	Energy source	Vehicle gasoline equivalent mpg	Total system energy use MJ/km	Total system CO_2 gC/km	Price increase $
(a) Mainstream					
Current gasoline fueled ICE vehicle	Petroleum	28	3.6	72	0
Evolving (2020) baseline ICE/vehicle	Petroleum	43	2.3	47	800
(b) Advanced Vehicle (2020)					
Gasoline ICE	Petroleum	49	2.1	42	2,200
Diesel ICE	Petroleum	56	1.8	37	3,300
Gasoline, ICE hybrid, battery	Petroleum	71	1.5	30	4,000
Diesel, ICE hybrid, battery	Petroleum	82	1.3	27	4,900
CNG ICE hybrid, battery	Nat. Gas	73	1.5	24	4,500
Compressed H_2 fuel cell hybrid	Nat. Gas	94	1.7	34	5,000
Gasoline reformer fuel cell hybrid	Petroleum	42	2.4	49	6,200

Summary

1. Sizeable improvements in internal combustion engine performance and efficiency are feasible (of order a percent a year).
2. Add engine, transmission, and vehicle improvements together, long-term total system energy consumption impact is significant (of order a factor of two).
3. Total system--“well to wheels”--energy and CO_2 emissions for best ICE-based hybrid propulsion systems, and hydrogen fuel-cell hybrid system, are similar in magnitude.
4. Fuel cell hybrid systems, with on-board liquid fuel reformers, are comparable to future standard spark-ignition engine vehicle (baseline).