High Performance Diesel Fueled Cabin Heater

Tom Butcher and James Wegrzyn
Energy Science and Technology Division
Building 526 Upton, N.Y. 11973
Brookhaven National Laboratory

Abstract

Recent DOE-OHVT studies show that diesel emissions and fuel consumption can be greatly reduced at truck stops by switching from engine idle to auxiliary-fired heaters. Brookhaven National Laboratory (BNL) has studied high performance diesel burner designs that address the shortcomings of current low fire-rate burners. Initial test results suggest a real opportunity for the development of a truly advanced truck heating system. The BNL approach is to use a low pressure, air-atomized burner derived form burner designs used commonly in gas turbine combustors. This paper reviews the design and test results of the BNL diesel fueled cabin heater. The burner design is covered by U.S. Patent 6,102,687 and was issued to U.S. DOE on August 15, 2000.

1. Introduction

The development of several novel oil burner applications based on low-pressure air atomization is described. The atomizer used is a pre-filming, air blast nozzle of the type commonly used in gas turbine combustion. The air pressure used can be as low as 1300 Pa and such pressure can be easily achieved with a fan. Advantages over conventional, pressure-atomized nozzles include ability to operate at low input rates without very small passages and much lower fuel pressure requirements.

At very low firing rates the small passage sizes in pressure swirl nozzles lead to poor reliability and this factor has practically constrained these burners to firing rates over 14 kW. Air atomization can be used very effectively at low firing rates to overcome this concern. However, many air atomizer designs require pressures that can be achieved only with a compressor, greatly complicating the burner package and increasing cost. The work described in this paper has been aimed at the practical adaptation of low-pressure air atomization to low input oil burners. The objective of this work is the development of burners that can achieve the benefits of air atomization with air pressures practically achievable with a simple burner fan.

2. Description of the Atomizer

The nozzle can be characterized as a low-pressure, pre-filming, air blast atomizer typical of those used in gas turbine combustors. A cross section illustration is provided in Figure 1.

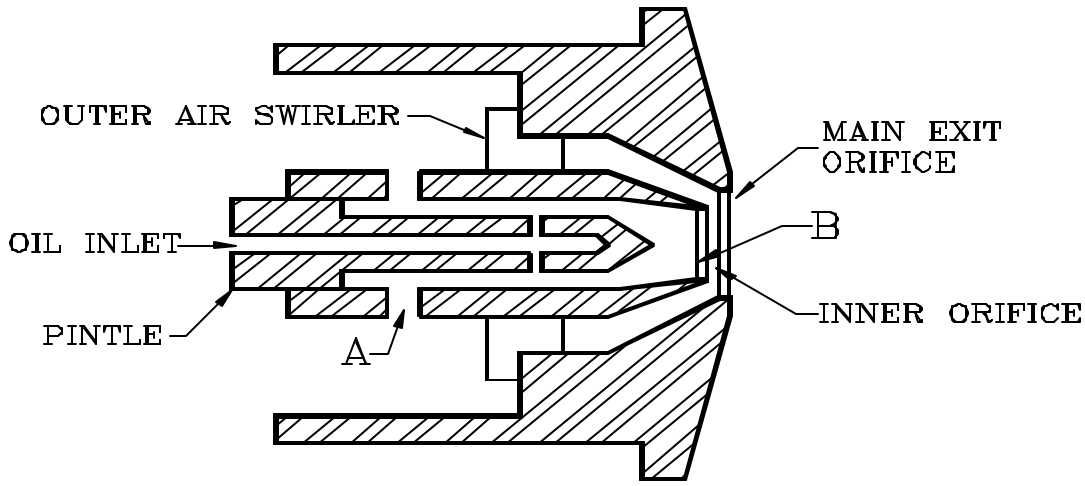

Figure 1. Illustration of the internal features of an atomizer

Air entering the back of the nozzle is internally divided into two parts. Most of the air passes through the outer swirler and spins out through the main exit orifice. A smaller amount passes radially inward through four small, offset holes ("A" in Figure 1), providing counter swirling air around the pintle. Fuel enters the back of the nozzle and is injected, through small, radial holes onto the inner surface of the "swirler". The swirling air distributes and swirls the oil, pre-filming it as it leaves the inner orifice ("B"). The size and number of the oil injection holes depends upon the firing rate, but typically 2 or 3 holes are used with diameters 200 to 400 microns. Studying the form of the exit jet sets the design parameters. If the velocity is too low the fuel may exit as a poorly formed jet or even drip, resulting in an uneven film on the inner surface of the swirler. Fuel pressure at the nozzle is typically 0.1 bars.

The swirl downstream of the nozzle is primarily dominated by the axial swirl vanes inside of the nozzle. The swirl level can be characterized as "weak" and a recirculation zone on the axis of the flow is not produced. The important implication of this is that the flame must be stabilized with an "external" rather than an "internal" recirculation pattern.

The characteristics of air blast atomizers have been well studied. Droplet size is strongly influenced by atomizer air/fuel ratio and air velocity. Increasing the air pressure as well as the fraction of the total combustion air that passes through the atomizer will both reduce the size of the drops. In this work the performance of atomizers is measured using a laser diffraction particle size monitor. Generally, the atomizer used here can produce similar or better performance than the conventional pressure swirl nozzles with air pressure over 1300 Pa.

The pattern or "spray angle" produced by the nozzle can be influenced by the angle of the axial swirl vanes on the nozzle swirler. A typical pattern, produced with 30-degree vanes is illustrated in Figure 2.

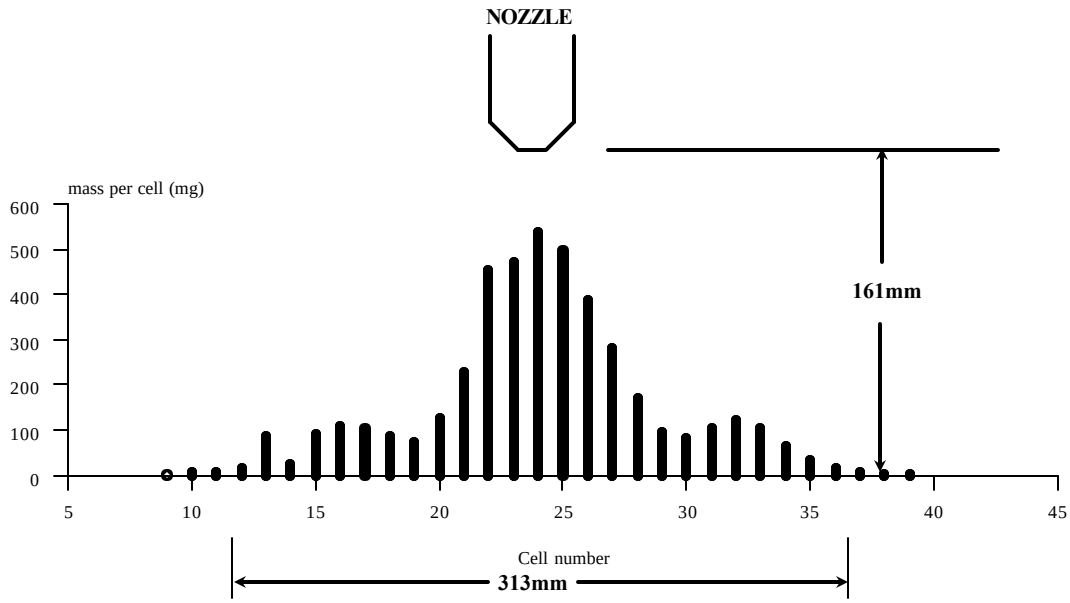

Figure 2. Illustration of typical spray pattern

3. Application 1. Domestic Heating

The first head arrangement developed is illustrated in Figure 3 and this follows a similar arrangement used in traditional, retention head burners. All of the air from the burner's fan is delivered into the air tube plenum behind the burner head. At the head the air is divided into three different parts: primary air – which passes through the nozzle, atomizing the oil; secondary air – which passes through small slots on the face of the burner head, primarily serving to keep the face clear from coke deposits; and tertiary air which enters the flame zone through an adjustable annular opening around the outer edges of the head. As in many traditional burners the head can be moved in and out to provide a range of excess air and firing rate adjustment. In this design the full air pressure from the fan, in the range of 1300 Pa, is available at the back end of the head. Tertiary air velocity is high and this has considerable influence on the flow patterns within the flame zone. In addition, the tertiary air annular opening is small, on the order of 1.3 mm and some care must be taken in design to assure a uniform gap around the circumference.

The fan used in this application is a conventional oil burner fan, driven with a 3450 rpm AC motor on a single shaft with a conventional gear-type fuel pump. A flow meter orifice between the pump and the nozzle is used to control firing rate and keep the fuel pressure at the nozzle at the 0.1 bars level. In field tests the fuel pump pressure has been evaluated at both low (0.4 bar) and high (7 bar) levels. The issue of fuel pressure to be

employed is not really combustion related but rather related to reliability of regulation and the performance under conditions of partial fuel filter and line blockage. The burner uses a conventional "cad cell" operating control and interrupted ignition.

This arrangement has been taken to commercial status as the Pioneer burner. It is fully approved for commercial use in the U.S. over the firing rate range of 12. to 25 kW. Field trials are in progress.

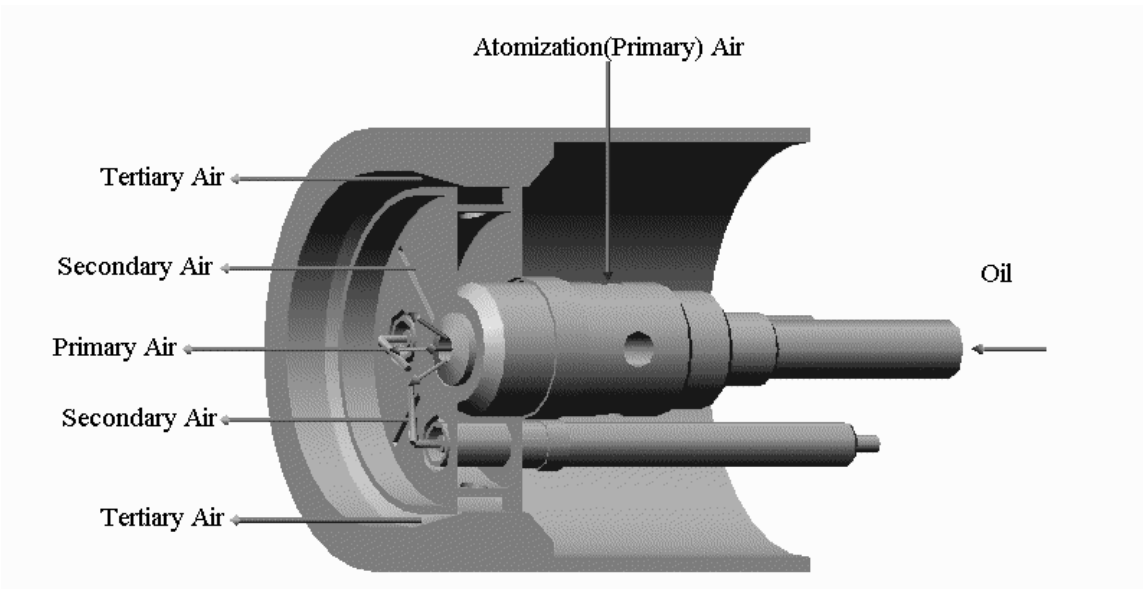

Figure 3. Burner head arrangement #1

4. Application 2. Domestic Heating

A second, considerably different, burner head is currently under active development with the objectives of a simpler head relative to the Pioneer burner and a higher fraction of total combustion airflow through the atomizing nozzle. Figure 4 shows the general arrangement of the air tube, burner head, and flame tube.

All of the air from the fan in this case is delivered into a central feed tube with the nozzle at the far end. Radial holes around the air tube allow a small fraction (~30%) of the total flow to pass out of this central air tube into the surrounding annular space. This secondary air then flows axially down, entering the flame zone as low velocity (.5 m/s) secondary air. The flow pattern in the flame zone is essentially a strong central, swirling jet with a torroidal recirculation pattern. The flame tube, choke ring, and recirculation slots shown serve to provide flame stability and a controlled amount of recirculation of cooler gas from outside of the flame tube back into the flame zone. The emission levels of NO_X from the burner can be adjusted by allowing greater amounts of recirculation. However, for the U.S. markets NO_X emissions are not an important technology driver and the paramount design parameter has been compatibility with a common, yellow flame burner operating control.

With the burner configured as shown there is obviously no provision for flow control. This burner is intended as a fixed firing rate unit without excess air adjustment ability except through fuel pressure adjustment. All current work is focused on an input rate of 13.5 kW, although smaller and larger heads have been built.

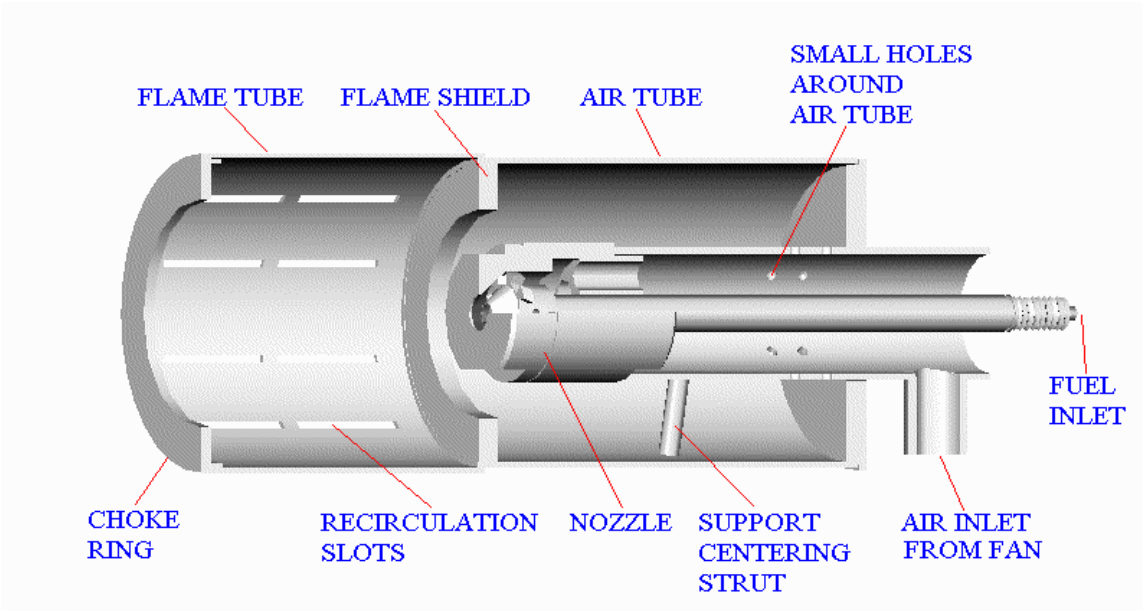

Figure 4. Burner head arrangement #2

The choke ring at the end of the flame tube can be eliminated if the flame tube was made longer and some development effort has been placed in this direction. However, the burner must be compatible with typical U.S. cast iron boilers that can have a very short length available in the combustion chamber.

The current prototype burner system based on this head arrangement is based on non-conventional components. The fan is a brush less DC blower / fan set with a maximum static pressure of 2000 Pa. Fuel is delivered using a discrete solenoid pump with integral pressure regulator set at 2.1 bars. A conventional operating control is used with interrupted ignition. Configured in this way the system electric power draw is 65 watts.

The prototype of this burner started field trials during the 1999/2000 heating season.

5. Summary

In summary, low-pressure air atomization of diesel fuel with air pressures in the range of 1500Pa can be used to develop practical cabin heaters. Several burners have been developed with firing rate ranging from 2.8 kW to 27 kW. Low NOx emissions can be achieved by designing the burner heads for high recirculation rates

Acknowledgements – Sponsors of the work described here include the United States Department of Energy, the New York State Energy Research and Development Authority, and the United States Army.