An Integrated Virtual Lab Approach for Aftertreatment System Simulation

B. Bolton, N. Hakim, K. Sisken, H. Zhang

Detroit Diesel Corporation

An integrated CIDI (diesel) engine-aftertreatment-vehicle system is extremely complex with numerous interacting variables and an unlimited number of control options. An experimental approach to develop an optimized viable system is tedious, if at all possible. Sophisticated component, subsystem and integrated simulation tools offer an excellent option of a virtual lab approach to the development of such a complex system. A viable and robust CIDI aftertreatment system can thus be developed within optimum time and resources when this virtual simulation is "Wired" with selected hardware-based testing.

Detroit Diesel is developing an effective virtual lab, multi-level, integrated engine-aftertreatment-vehicle system package. A common platform embodies 0-, 1- and multi-dimensional models of selected components and subsystems. Different models can be coupled or integrated, and simulated tests can be carried out in order to define optimum control parameters or to predict system response. This paper will present the general approach, selected model features and some preliminary results.

DAIMLERCHRYSLER

DaimlerChrysler Powersystems

Integrated Virtual Lab for Aftertreatment Simulation

B. Bolton, N. Hakim,
K. Sisken, H. Zhang

Acknowledgements

- DOE-OTT
- S. Bhargava, X. Fan, Y. Liu and M. Sun of DDC
- The Rest of the DDC Engineering Technologies Team
- The Many Simulation Suppliers and Subcontractors Involved in This Work

DDC's Aftertreatment (AT) Virtual Lab
Objective

- DDC has embarked on the development of a comprehensive AT simulation tool set.
- When validated and integrated with other engine simulation tools, virtual testing of various AT technologies and integrated systems will be carried out.
- This will result in optimized designs, in record cycle time and maximized return on the R&D investment.

DDC's Aftertreatment (AT) Virtual Lab

Strategy

- DDC's strategy is to cover a wide range of resolution to selectively meet requirements for low computational time as well as for high spatial resolution.
- DDC <u>has shared this strategy with suppliers and partners of the simulation tools</u>. DDC then teamed up with few for the development of various building blocks of our tool set.
- Initial validation efforts are promising.

DDC's Aftertreatment (AT) Virtual Lab
The "Three-Layer" Strategy

3D- CFD Base

Detailed physics and high spatial resolution. High computational time required.

1D- CFD Base

Engine system integration focus with simplified geometry and limited control strategy application.

0D- Mean Value Base

Engine/vehicle/AT control strategy focus. Pursue real time analysis goal.

Focus on 1D "Middle Layer" Description

Diesel Cycle Simulation Domain

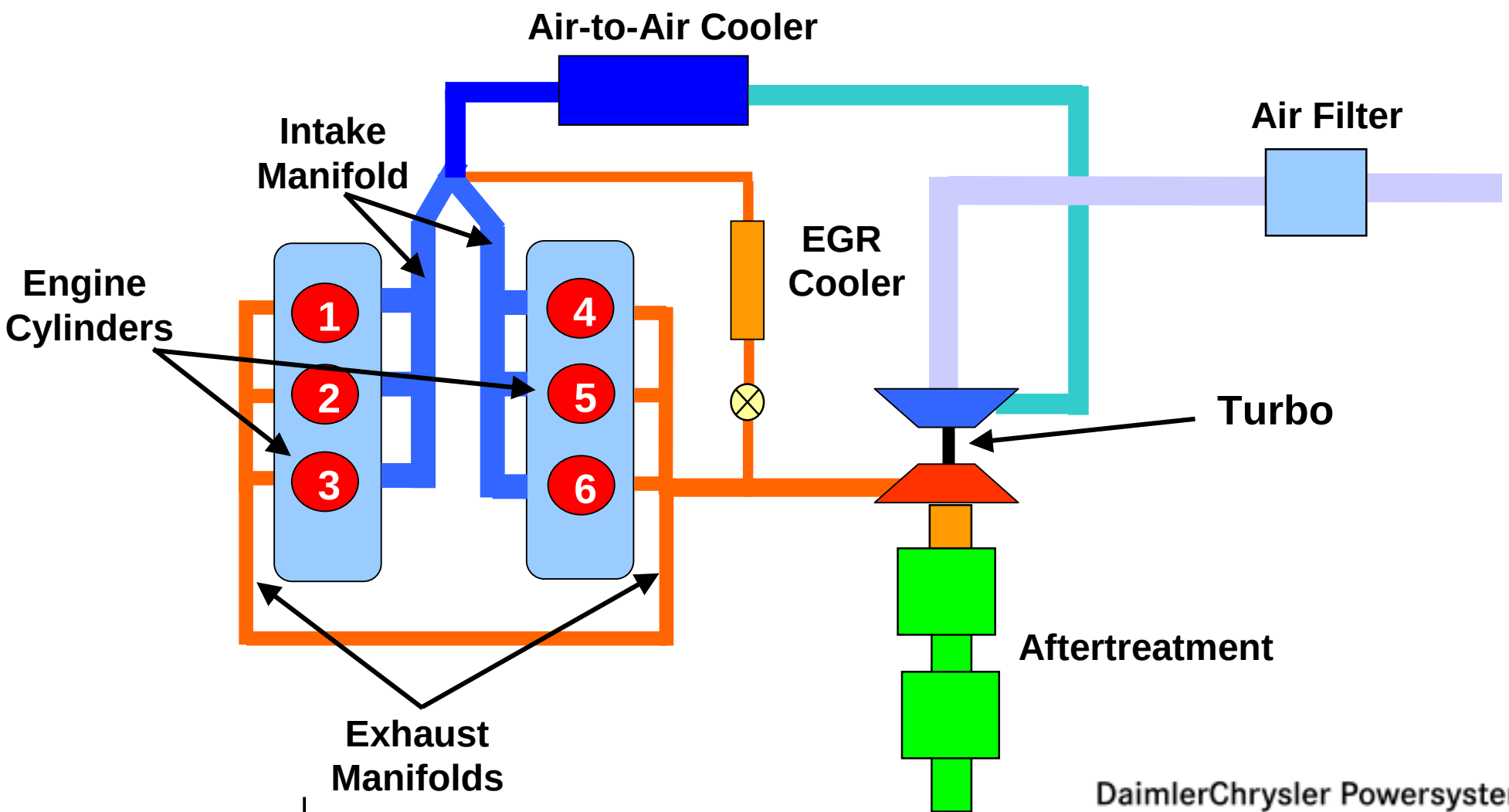

Diesel Cycle Simulation Tool Interactions

MBC - "Smarter" engine

CFD

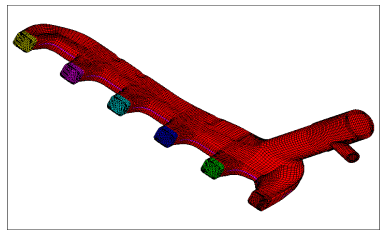

Combustion

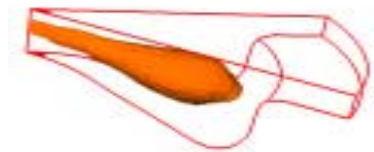

Aftertreatment

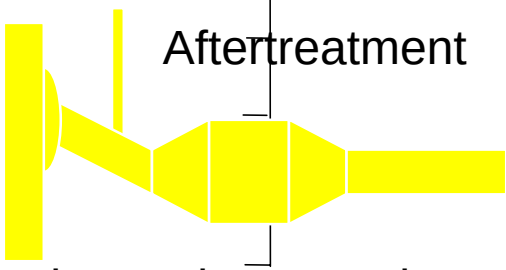

Bearing and Cranktrain

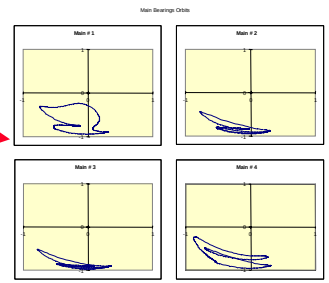

Diesel Cycle Simulation

Valve Train Dynamics

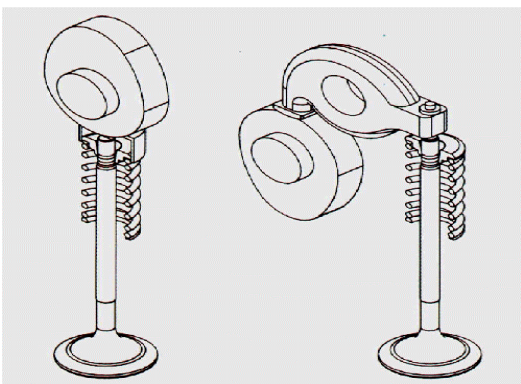

FEA

Cooling and Lubrication

Cycle Simulation With AT Models

In Cooperation with Gamma Technologies

Plug & Play Example

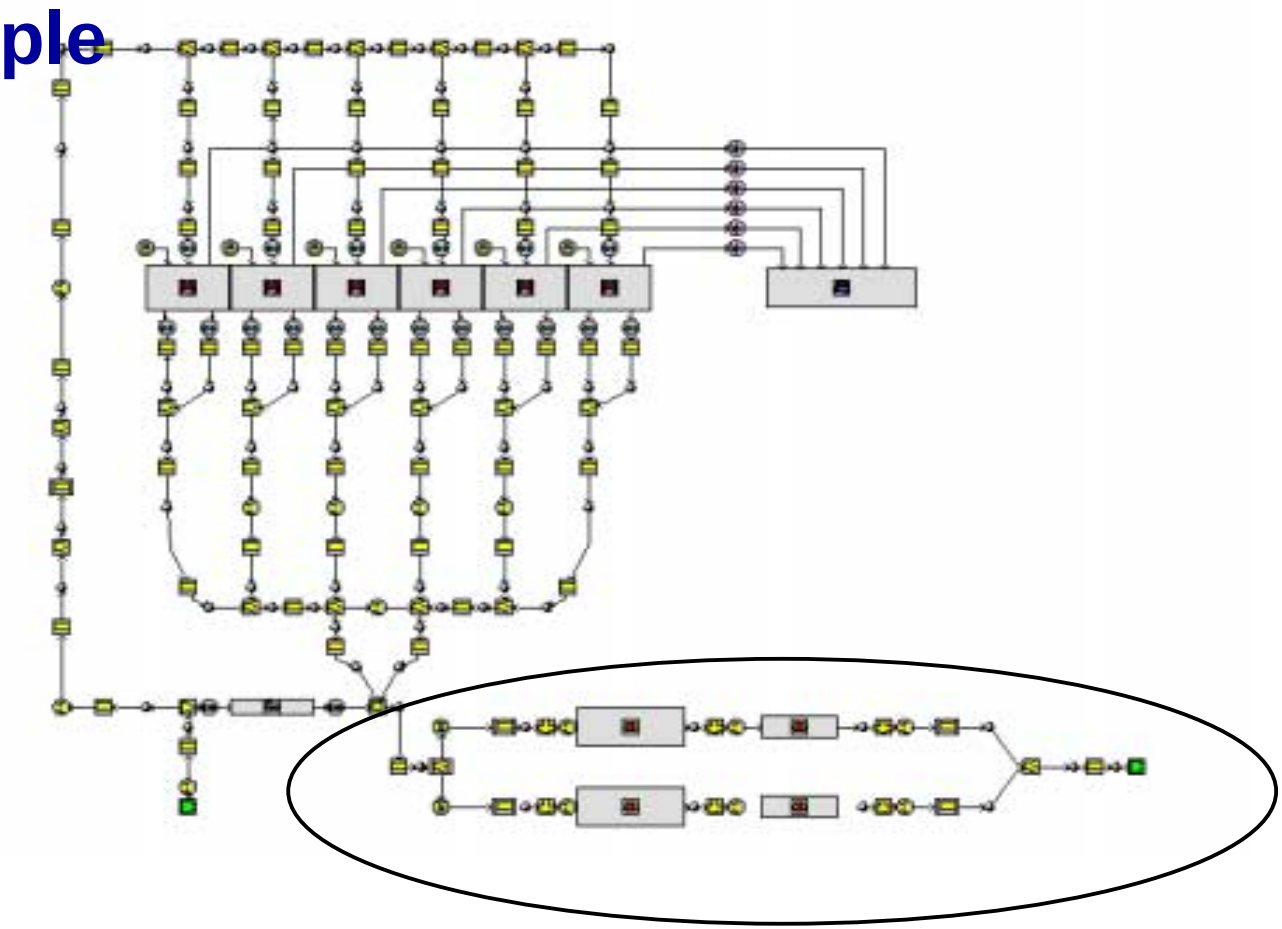

Cycle Simulation With AT Models

In Cooperation with Gamma Technologies

Plug & Play Example

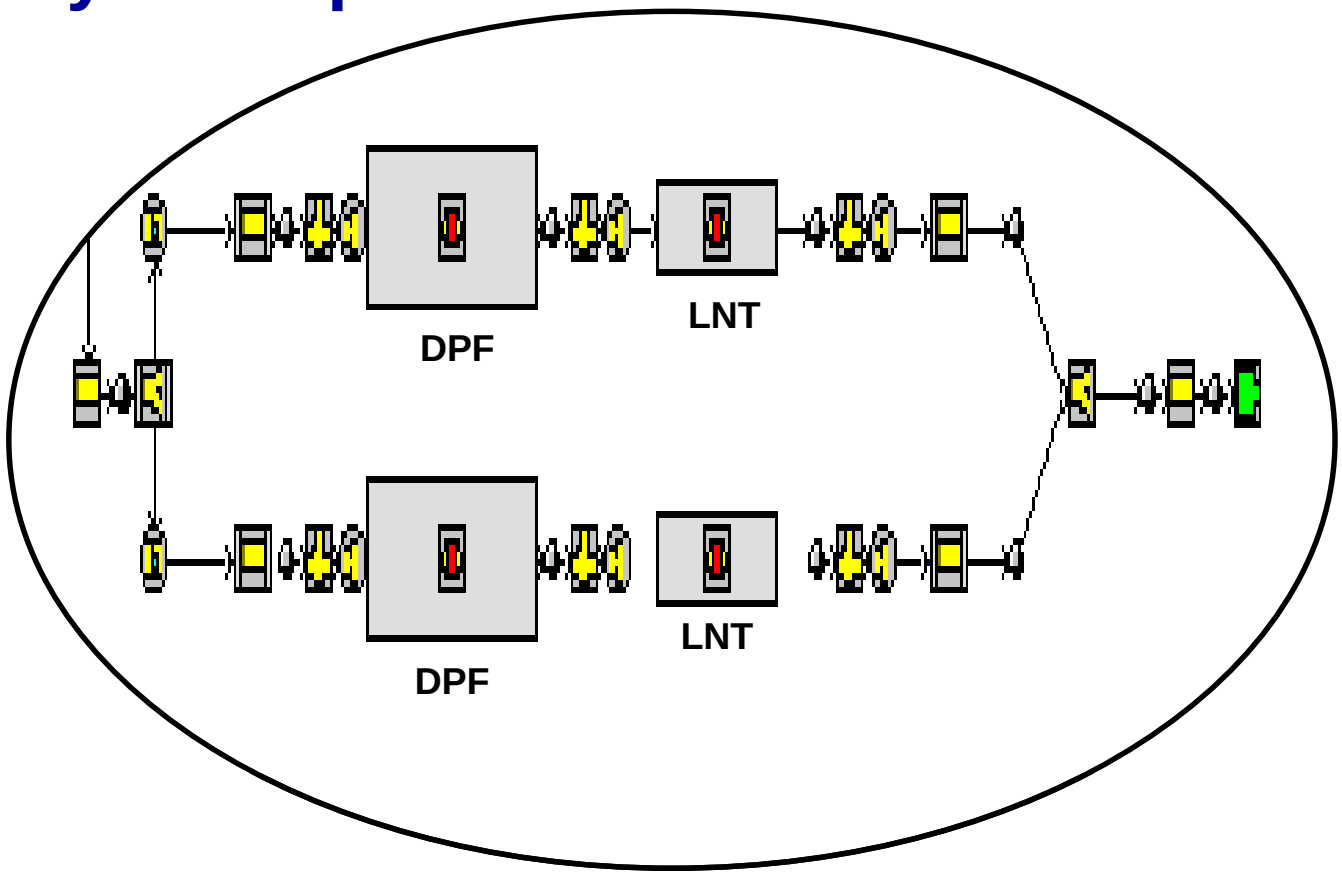

Lean NOx Trap (LNT) Simulation

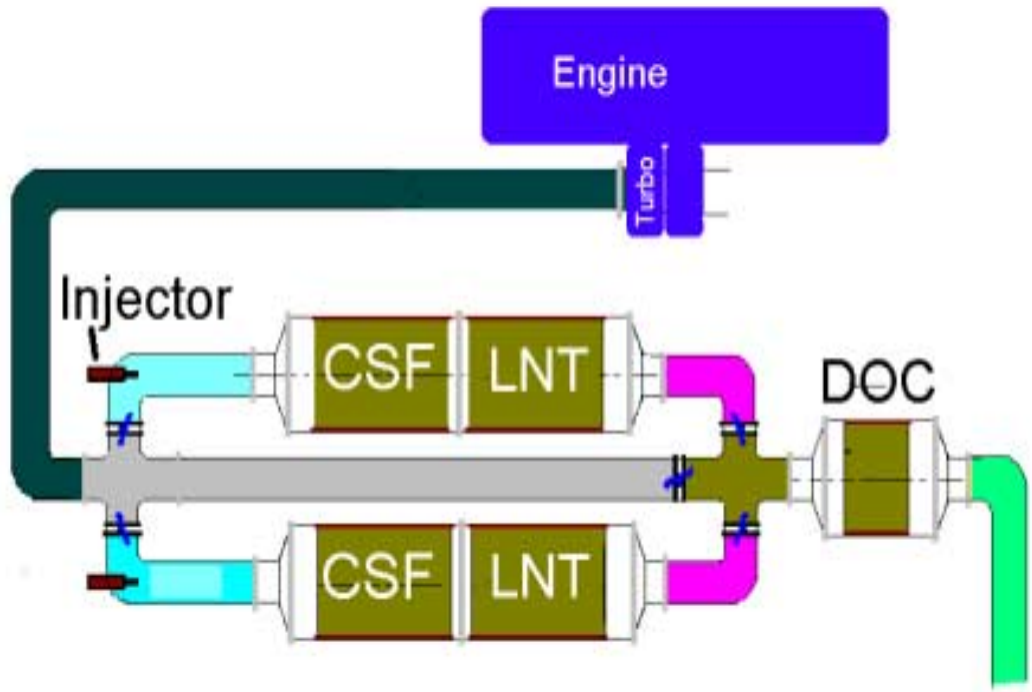

Developing LNT Regeneration Strategy

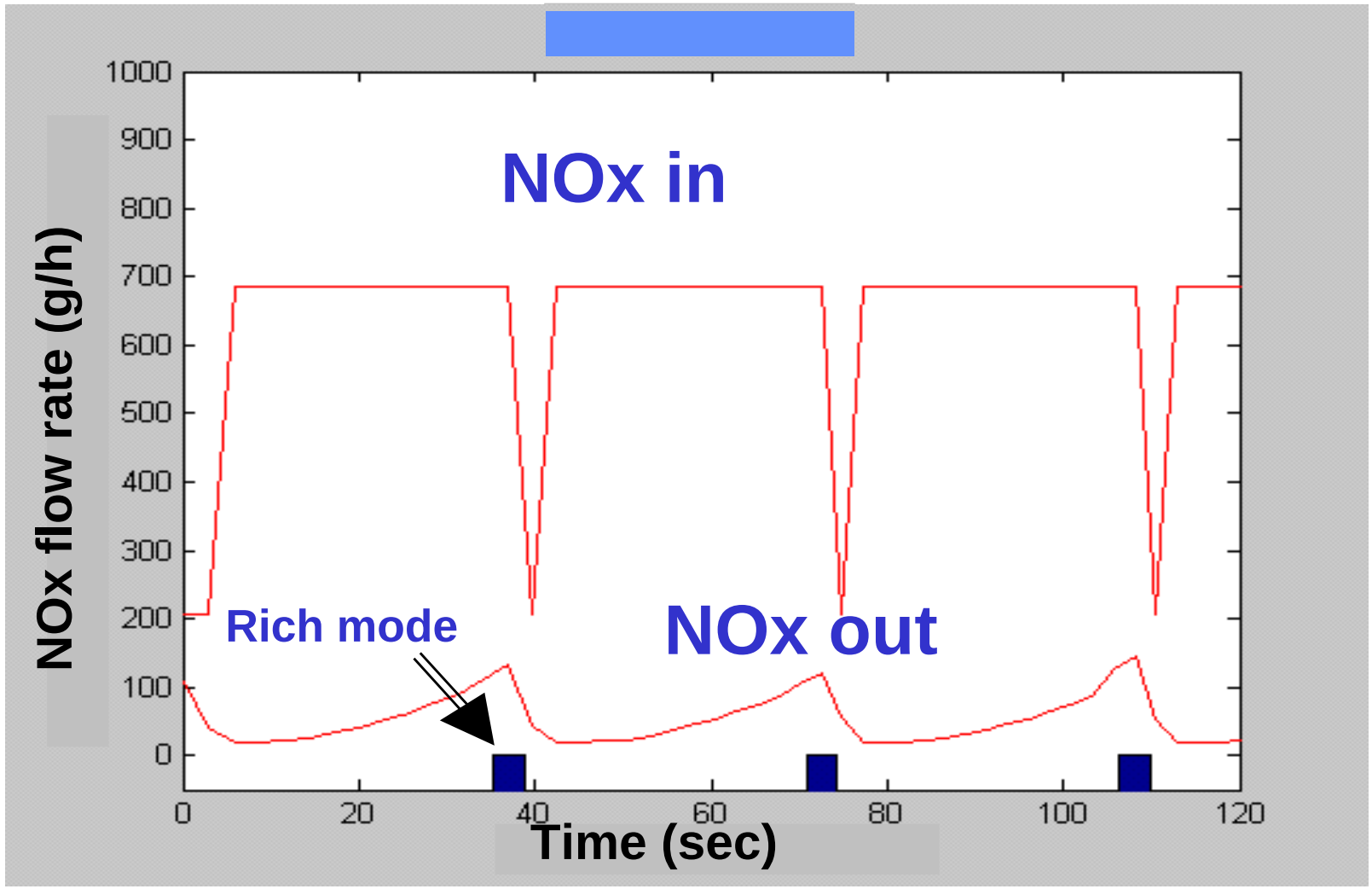

LNT Control System - NOx Conversion Efficiency

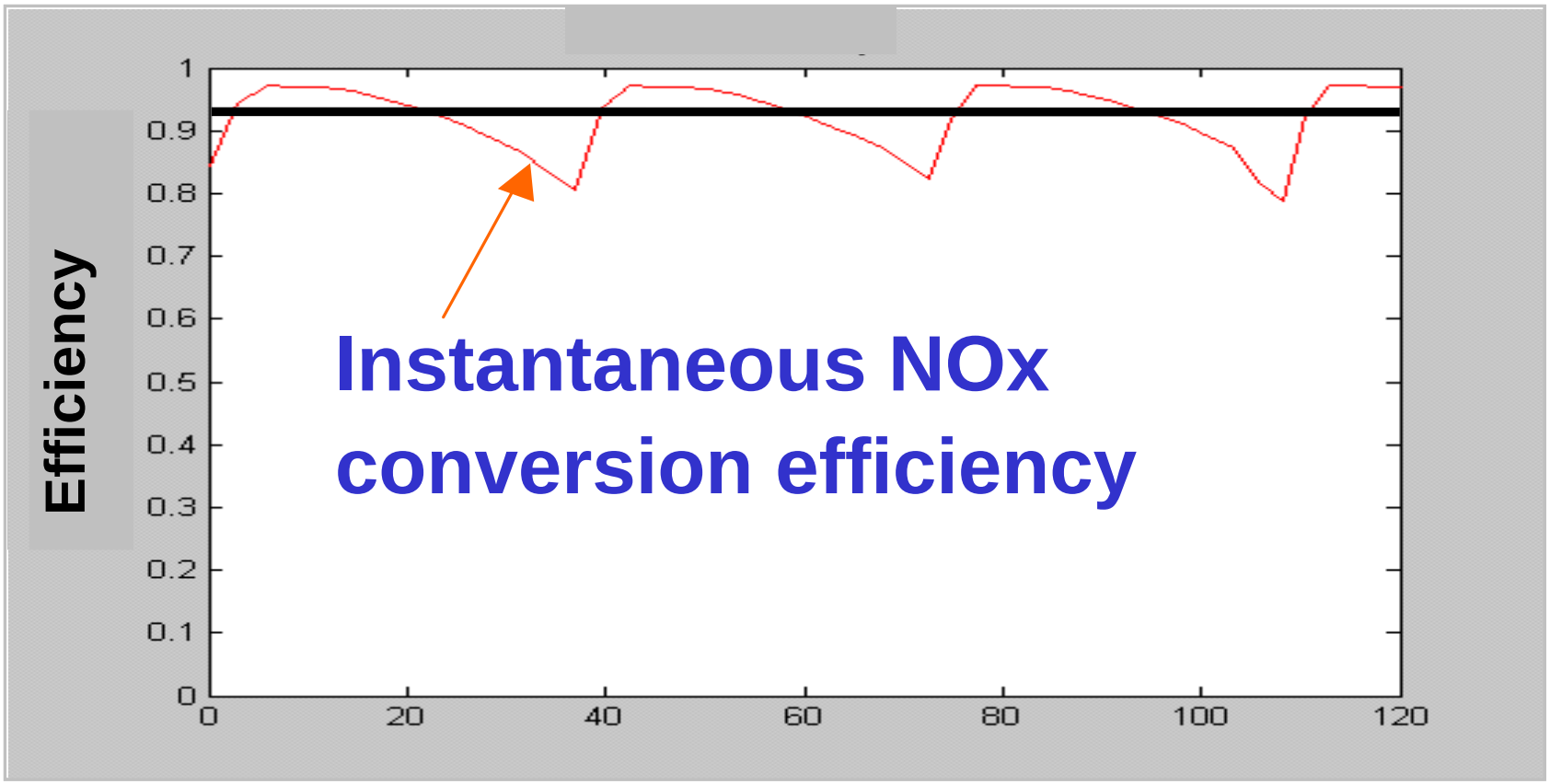

Overall NOx Conversion Efficiency = 91%

Regeneration Cycle is 35/3 seconds lean/rich

LNT Control System - LNT Instantaneous NOx Distribution

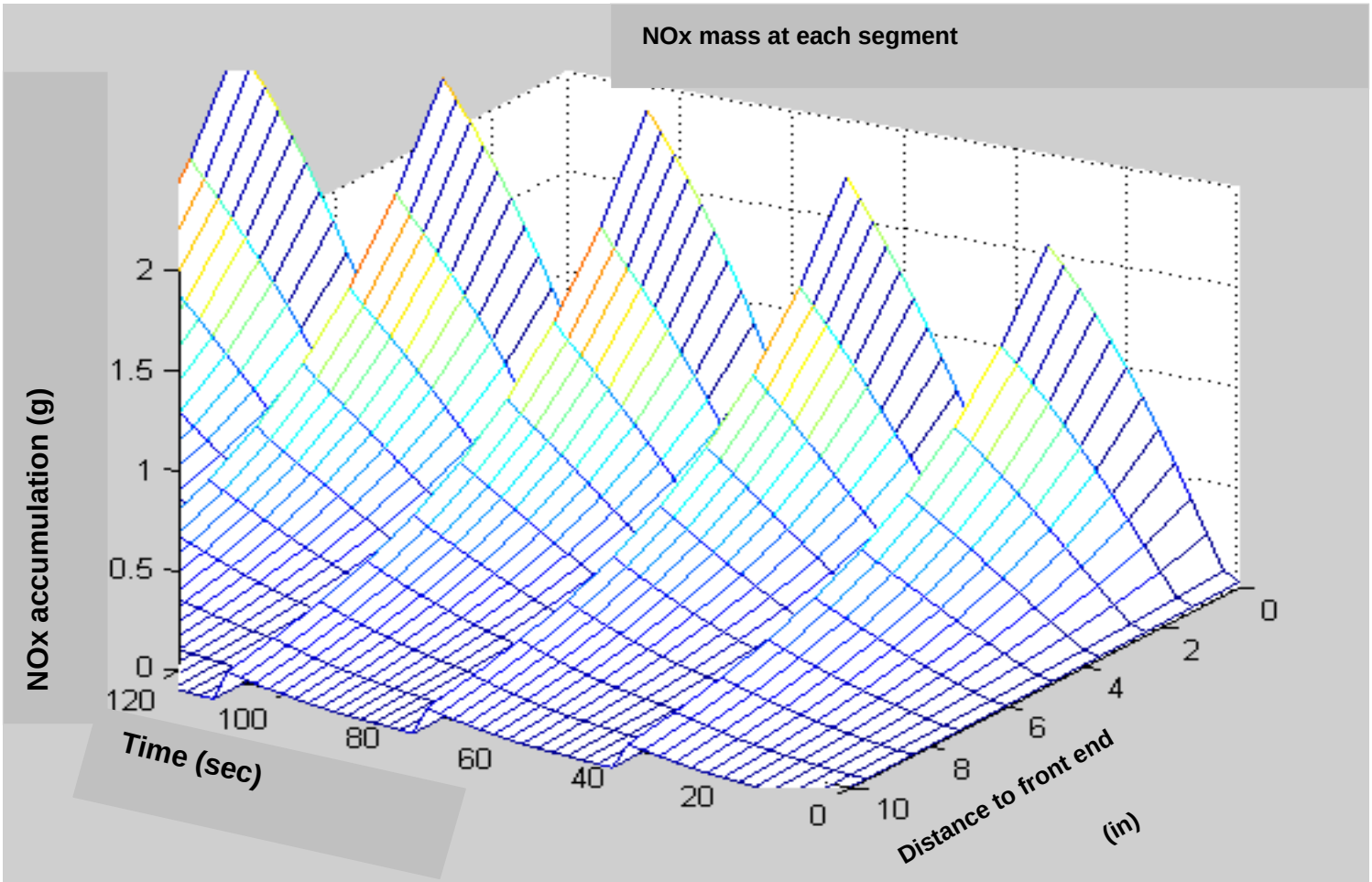

DDC's Virtual Lab Methodology

1D Aftertreatment Model Principles

- **Models Are Based on the First Principal of Physics.**
  - **Control Volume Approach Applied to Each Sub-volume**

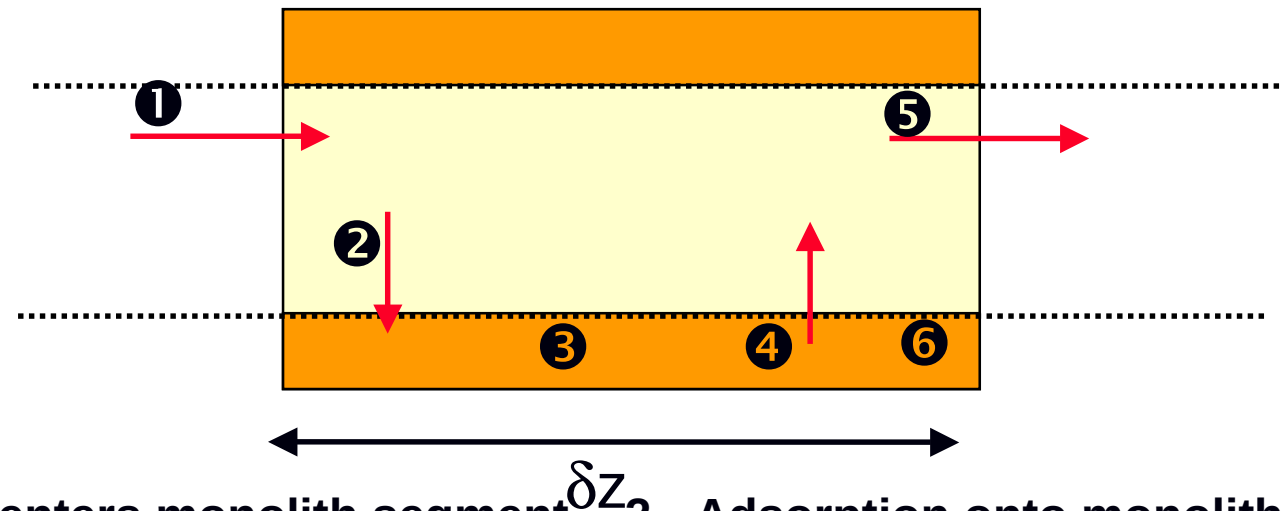

1 - Gas enters monolith segment

2 - Adsorption onto monolith

3 - Chemical reaction

4 - Desorption off monolith

5 - Gas exits monolith segment

6 - Energy Conservation to capture substrate temperature

DDC's Virtual Lab Methodology

Aftertreatment Models - Flow Sub-Model

- **Governing Equations Are Solved by Mass Transfer Coupled with Energy and Chemical Species Conservation.**

Two Phase Mass Transfer:

Gas Phase:

$$\varepsilon \frac{\partial C_g}{\partial t} + v_g \frac{\partial C_g}{\partial z} = -k_m G_a (C_g - C_s)$$

Solid Phase:

$$(1-\varepsilon) \frac{\partial C_s}{\partial t} = k_m G_a (C_g - C_s) - R(C_g, T)$$

- **Thermal Equations Includes Conduction, Convection and Chemical Reactions**

- **19 Gaseous Species Used in Models**

DDC's Virtual Lab Methodology

DPF Model Geometry

Schematic of Computational Domain

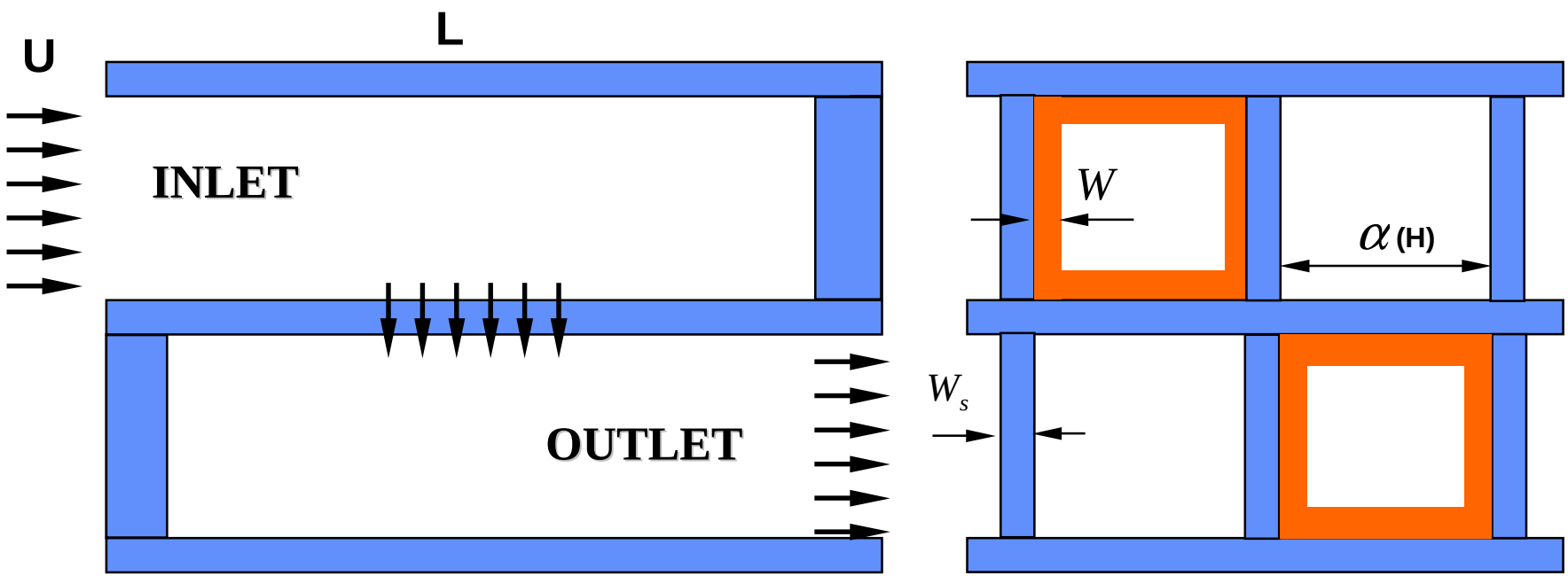

The Pressure Drop of a Diesel Particulate Trap Consists of Four Components Built into Filtration Theory

$$\Delta P = \Delta P_{channel} + \Delta P_{wall} + \Delta P_{cake} + \Delta P_{contract/e\ xpand}$$

CSF Model Validations

Engine "Steady State" and Transient Conditions

"Steady State" Filter Loading Test

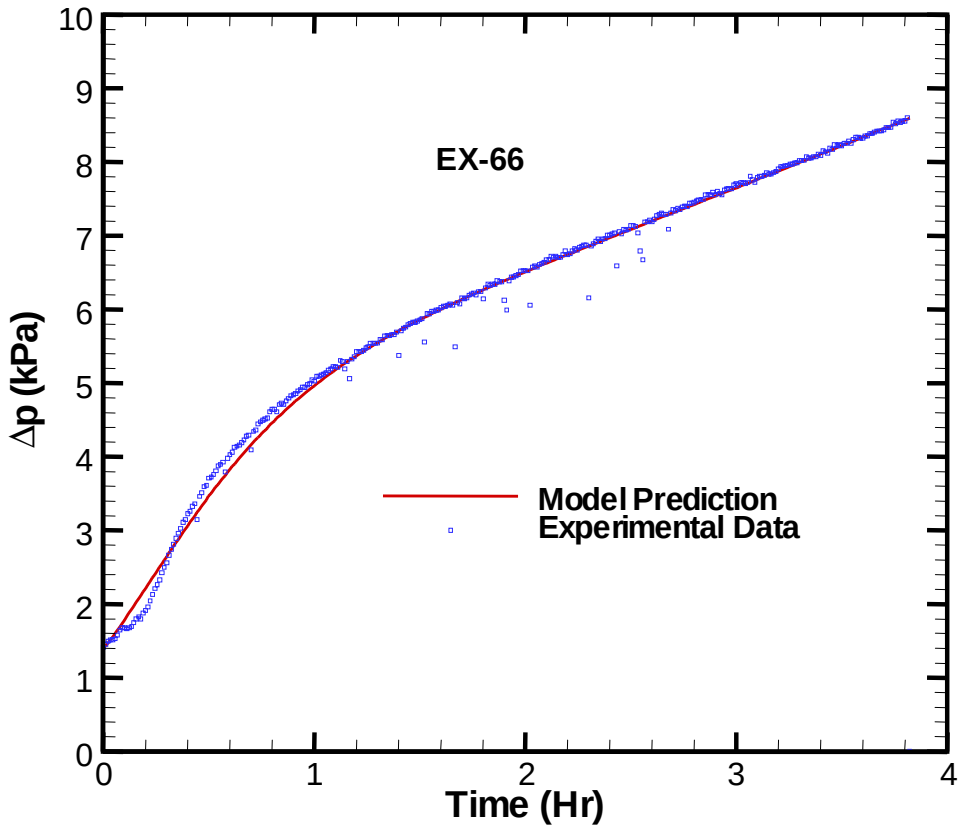

Transient OICA 13 Mode Tests

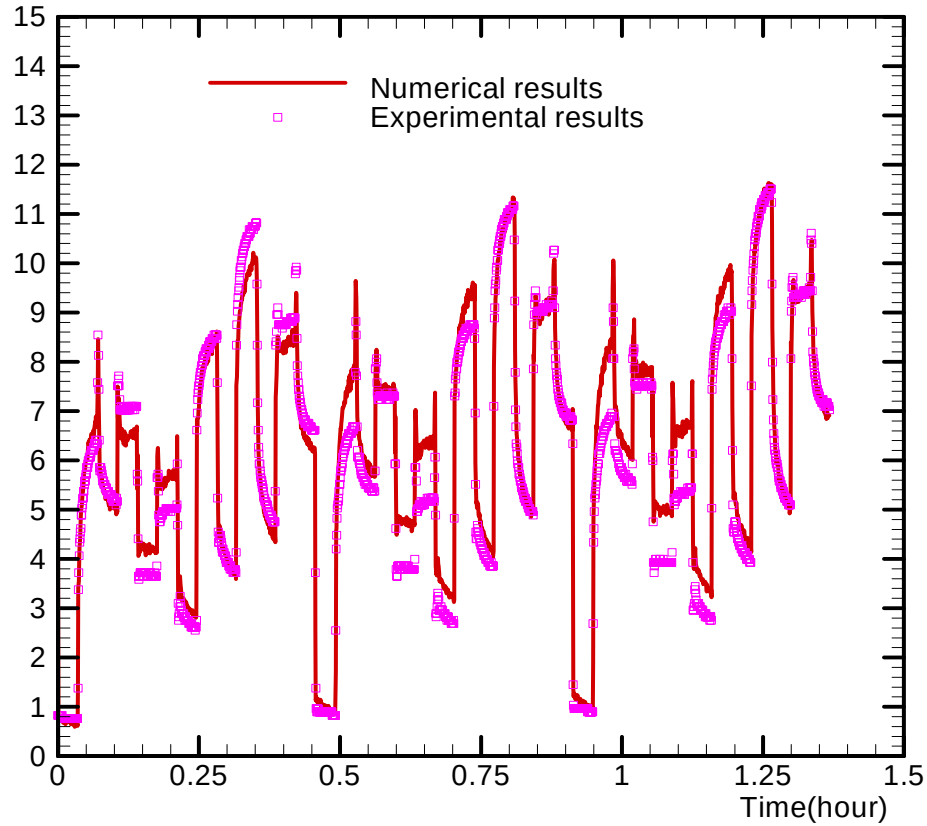

In Cooperation with Michigan Technological University and Engelhard Corp.

DaimlerChrysler Powersystems

SCR Model Validation

Steady State Results - Temperature Sensitivity

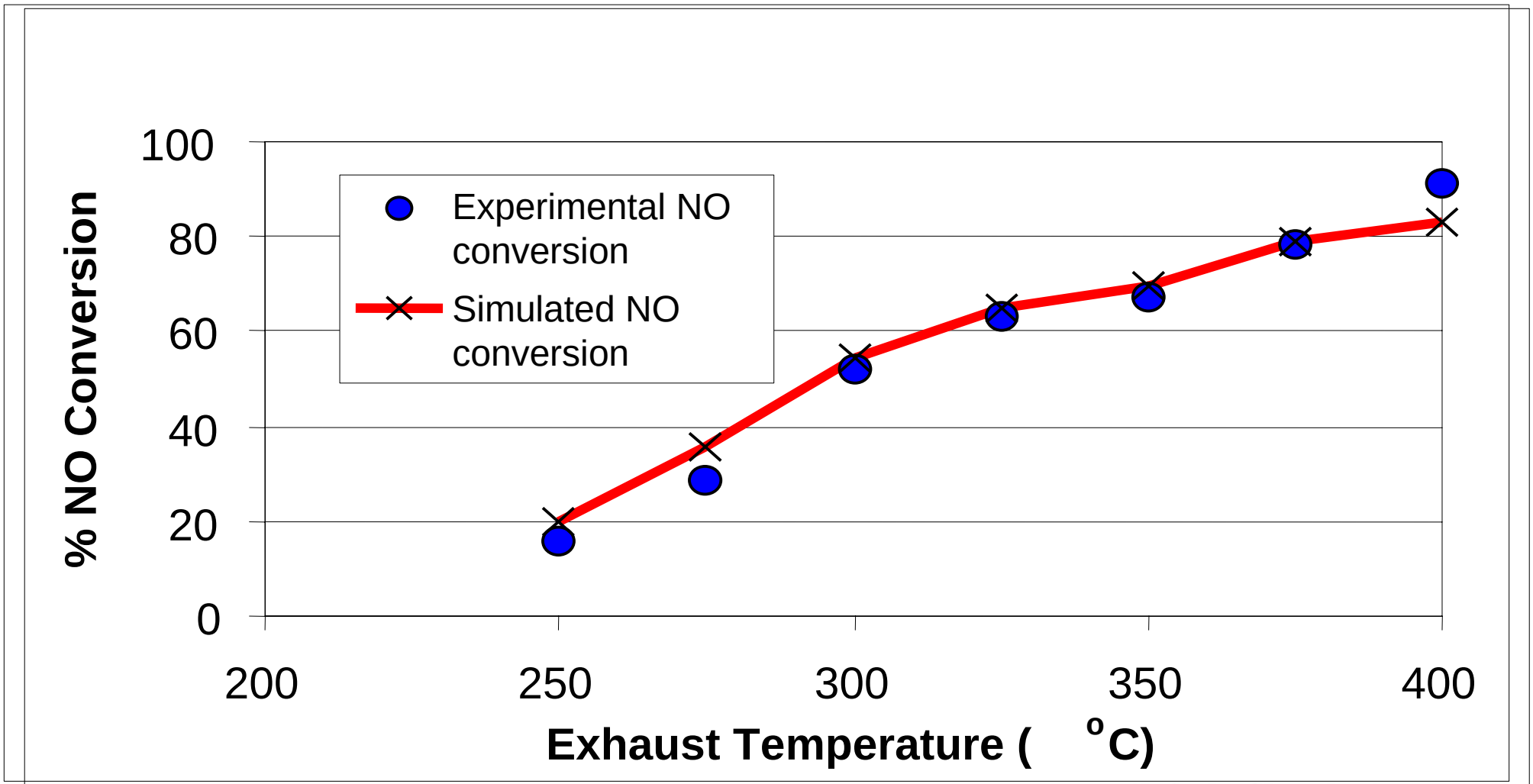

SCR Model Validation
Vehicle Transient Emission Results

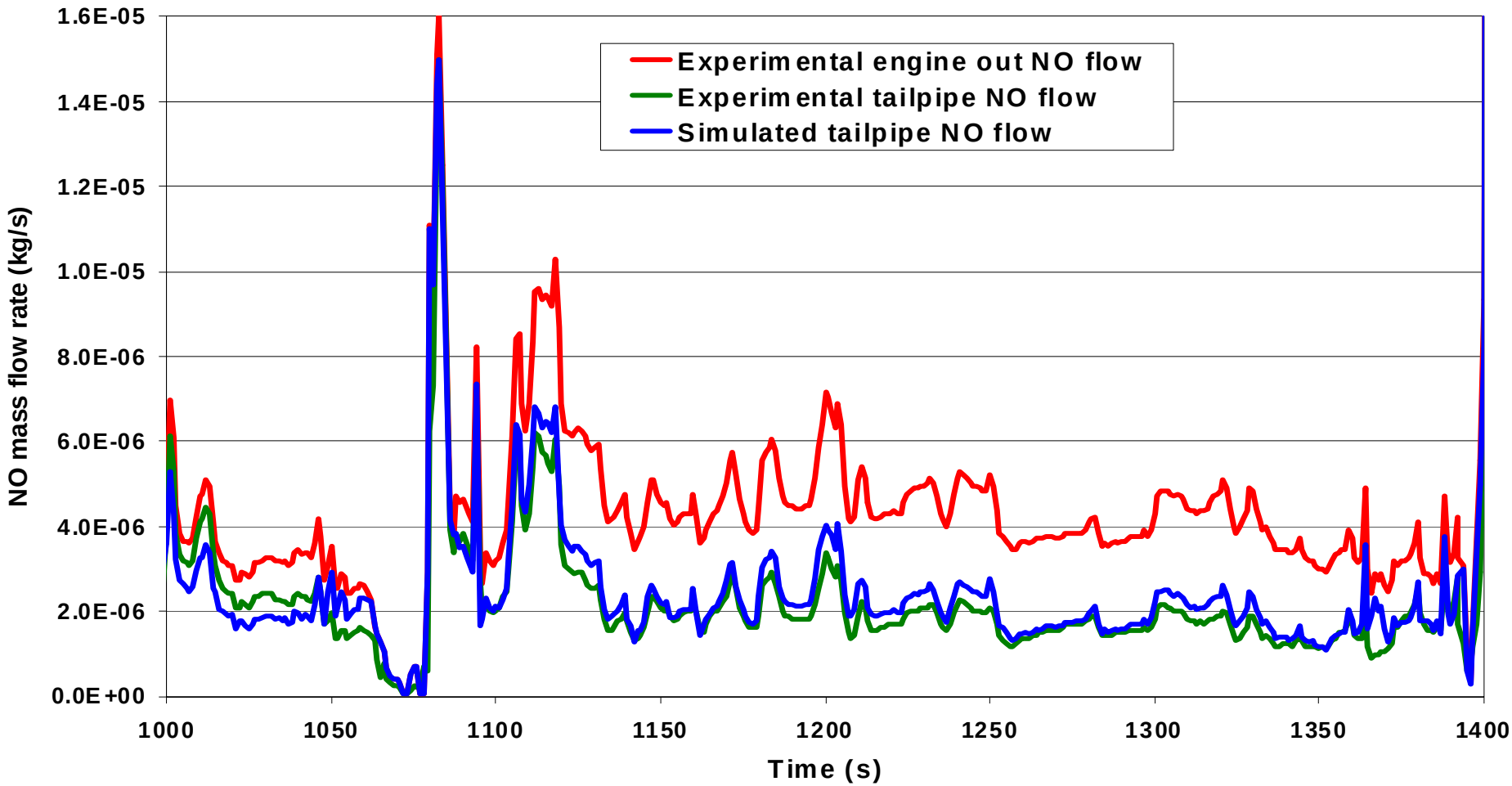

In Cooperation with Ricardo

Chemical Kinetics Options
Micro Kinetics: Chemkin Integrated with Star-CD

Exhaust Oxidation on a Pt-Rh Catalyst

Pt + Rh Exhaust Oxidation Reactions (56 Steps) (University of Heidelberg)

In Cooperation with adapco

$$R = \frac{k_1[CO][O_2]}{\left(1+K_1[CO]+K_2[C_xH_y]\right)^2\left(1+K_3[CO]^2[C_3H_6]^2\right)}$$

Lumped Reaction Mechanism

Account for rate limiting chemical reactions & species

University of Michigan - Dearborn

SURFACE MECHANISM ON Pt

1. ADSORPTION

O_2 + Pt(S) + Pt(S) → O(S) + O(S)
C3H6 + Pt(S) + Pt(S) → C3H6(S)
H_2 + Pt(S) + Pt(S) → H(S) + H(S)
H_2O + Pt(S) → H_2O(S)
CO_2 + Pt(S) → CO_2(S)
CO + Pt(S) → CO(S)
NO + Pt(S) → NO(S)
NO_2 + Pt(S) → NO_2(S)

2. DESORPTION

O(S) + O(S) → Pt(S) + Pt(S) +O_2
C_3H_6(S) → C_3H_6 + Pt(S) + Pt(S)
H(S) + H(S) → H_2 + Pt(S) + Pt(S)
H_2O(S) → Pt(S) + H_2O
CO(S) → CO + Pt(S)
CO_2 (S) → CO_2 + Pt(S)
NO(S) → NO + Pt(S)
NO_2(S) → NO_2 + Pt(S)
N(S) + N(S) → N_2 + Pt(S) + Pt(S)

3. SURFACE REACTIONS

C_3H_6(S) → C_3H_5(S) + H(S)
C_3H_5(S) + H(S) → C_3H_6(S)
C_3H_5(S) + Pt(S) → C_2H_3(S) + CH_2 (S)
C_2H_3(S) + CH_2(S) → C_3H_5(S) + Pt(S)
C_2H_3(S) + Pt(S) → CH_3(S) +C(S)
CH_3(S) + C(S) → C_2H_3(S) + Pt(S)
CH_3(S) + O(S) → CH_2(S) + OH(S)
CH_2(S) + OH(S) → CH_3(S) + O(S)
CH_2(S) + O(S) → CH(S) + OH(S)
CH(S) + OH(S) → CH_2(S) + O(S)
CH(S) + O(S) → C(S) + OH(S)
C(S) + OH(S) → CH(S) + O(S)
CH_3(S) + OH(S) → CH_2(S) + H_2O(S)
CH_2(S) + H_2O(S) → CH_3(S)+ OH(S)
CH_2(S) + OH(S) → CH(S) + H_2O(S)
CH(S) + H_2O(S) → CH_2(S) + OH(S)
CH(S) + OH(S) → C(S) + H_2O(S)
C(S) + H_2O(S) → CH(S) + OH(S)
O(S) + H(S) → OH(S) + Pt(S)
OH(S) + Pt(S) → O(S) + H(S)
H(S) + OH(S) → H_2O(S) + Pt(S)
H_2O(S) + Pt(S) → H(S) + OH(S)
OH(S) + OH(S) → H_2O(S) + O(S)
H_2O(S) + O(S) → OH(S) + OH(S)
CO(S) + O(S) → CO_2 (S) + Pt(S)
CO_2 (S) + Pt(S) → CO(S) + O(S)
C(S) + O(S) → CO(S) + Pt(S)
CO(S) + Pt(S) → C(S) + O(S)
NO(S) + Pt(S) → N(S) + O(S)
N(S) + O(S) → NO(S) + Pt(S)

SURFACE MECHANISM ON Rh

1. ADSORPTION

O_2 + Rh(S) + Rh(S) → O(S) + O(S)
CO + Rh(S) → CO(S)
NO + Rh(S) → NO(S)

2. DESORPTION

O(S) + O(S) → O_2 + Rh(S) + Rh(S)
CO(S) → CO + Rh(S)
NO(S) → NO + Rh(S)
N(S)+ N(S) → N_2 + Rh(S) + Rh(S)
CO(S) + O(S) → CO_2 + Rh(S) + Rh(S)

3. NO(Rh) SURFACE REACTIONS

NO(S) + Rh(S) → N(S) + O(S)

DaimlerChrysler Powersystems

Micro Versus Macro Kinetic Approach

- **Micro Kinetic**
  - Difficult to Generate
  - Appropriate Task for National Labs/Academia
  - Database Can Generate Lumped Reaction Mechanism
  - Modified AT Formulation May Require Minimal Tweaks
  - Potentially Applicable to Component Durability Analysis

Micro Versus Macro Kinetic Approach

- **Macro Kinetic**
  - **Lumped Kinetic Approach**
    - » Simplifies Each Mechanism Into Representative Reaction
    - » Lumps these into Reaction Mechanism
  - **More Economical**
    - » Reduced Computational Time and Species
  - **New AT Formulations Require New Reaction Descriptions**

Summary

- **Aftertreatment Models Being Developed**
  - **Flexible Resolution, Plug & Play**
  - **Good Application to Transients**
  - **Integrated System Control Applications**

Summary

- **Industry Develops and Applies Tools**
- **Leverage National Lab/Academia Expertise to Support <u>Fundamental Database Generation</u>**
  - **Micro-Kinetics**
  - **Detailed Diagnostic Data for Model Validation**
  - **Aging Factors Assessment**