DELPHI
Automotive Systems

Non-Thermal Plasma Approach To Simultaneous Removal of NOx & Particulate Matter

Diesel Engine Emission Reduction 2000 Workshop

SanDiego, California

August 20 - 24, 2000

Joachim Kupe, Dave Goulette, Mark Hemingway, Tom Silvis: Delphi E&C

Galen Fisher, Craig DiMaggio: Delphi Research Labs

Darrell Herling, Del Lessor, Suresh Baskaran, John Frye, Monty Smith : Pacific Northwest National Laboratory

DELPHI
Automotive Systems

Agenda

- Delphi System Approach
- Project Structure
- Modeling
- Reactor Design
- Power Requirements / Supply
- Catalyst & Mechanisms
- Particulate Filter Regeneration
- Summary / Timing

Non-Thermal Plasma Exhaust Aftertreatment NTP System Diagram

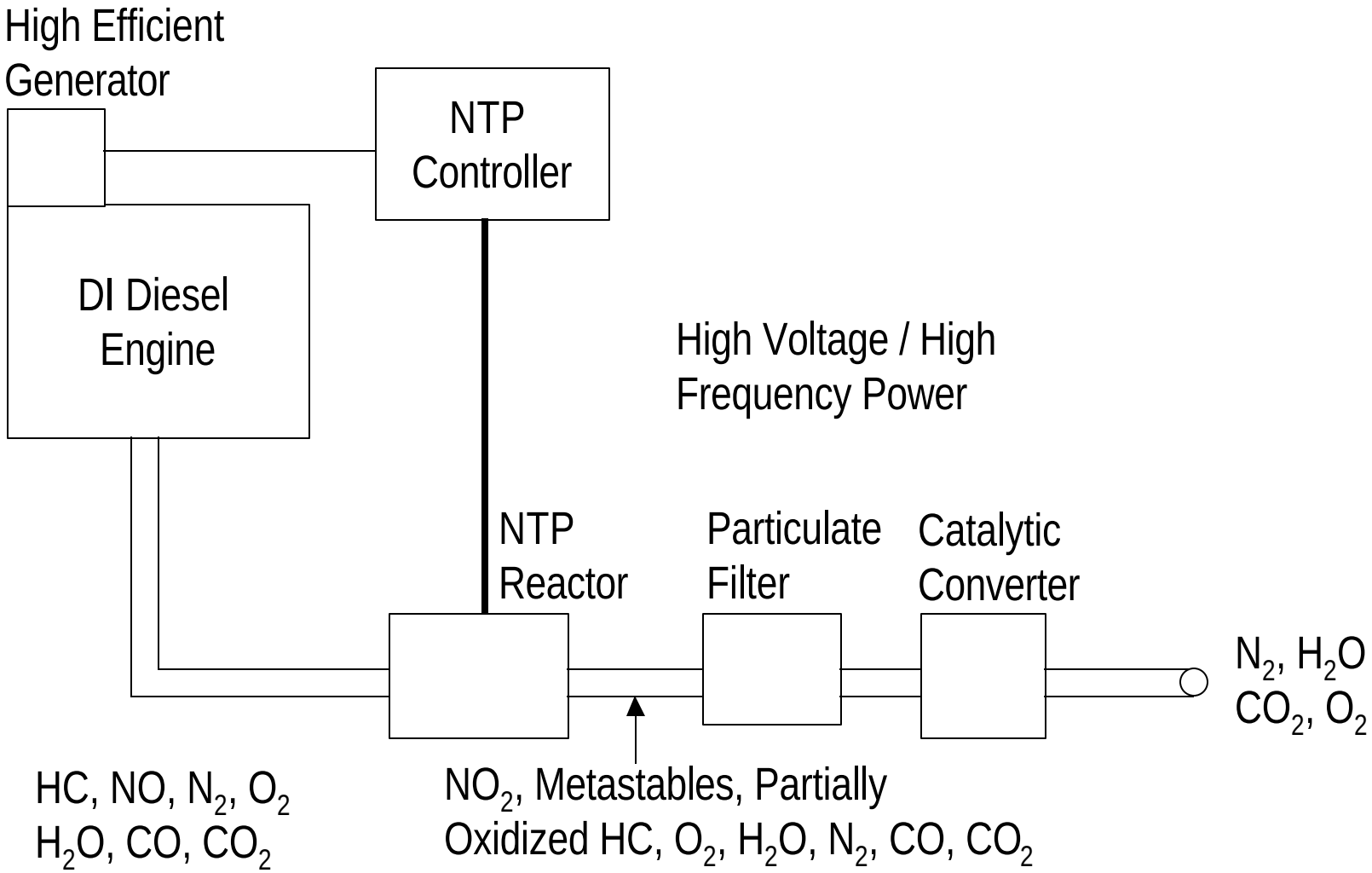

DELPHI
Automotive Systems

Team Structure

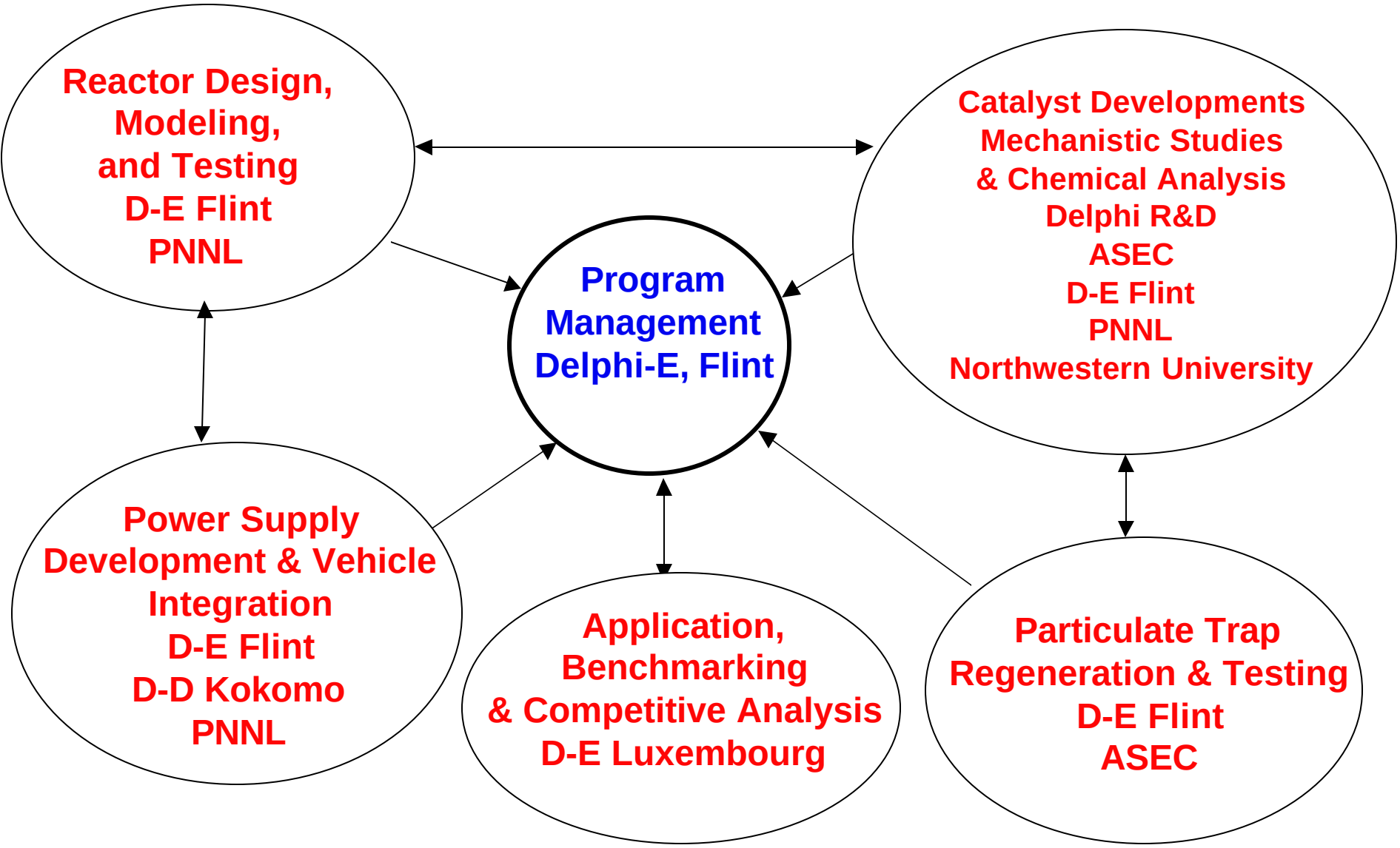

Reactor Modeling Purpose

- Develop predictive performance and plasma chemistry tools for an NTP reactor
  - Insights for reactor optimization and energy efficiency
  - Qualitative screening of reactor design concepts
- Develop working model to guide reactor design
  - Power requirements and operating parameters
  - Geometry and properties
    - » Gap width and thickness, barrier material and thickness, etc
    - » Voltage requirements, frequency, space velocity
- Insights on or resolution of operational issues
- Diagnosis and interpretation of experiments

Reactor Modeling
Discharge Model

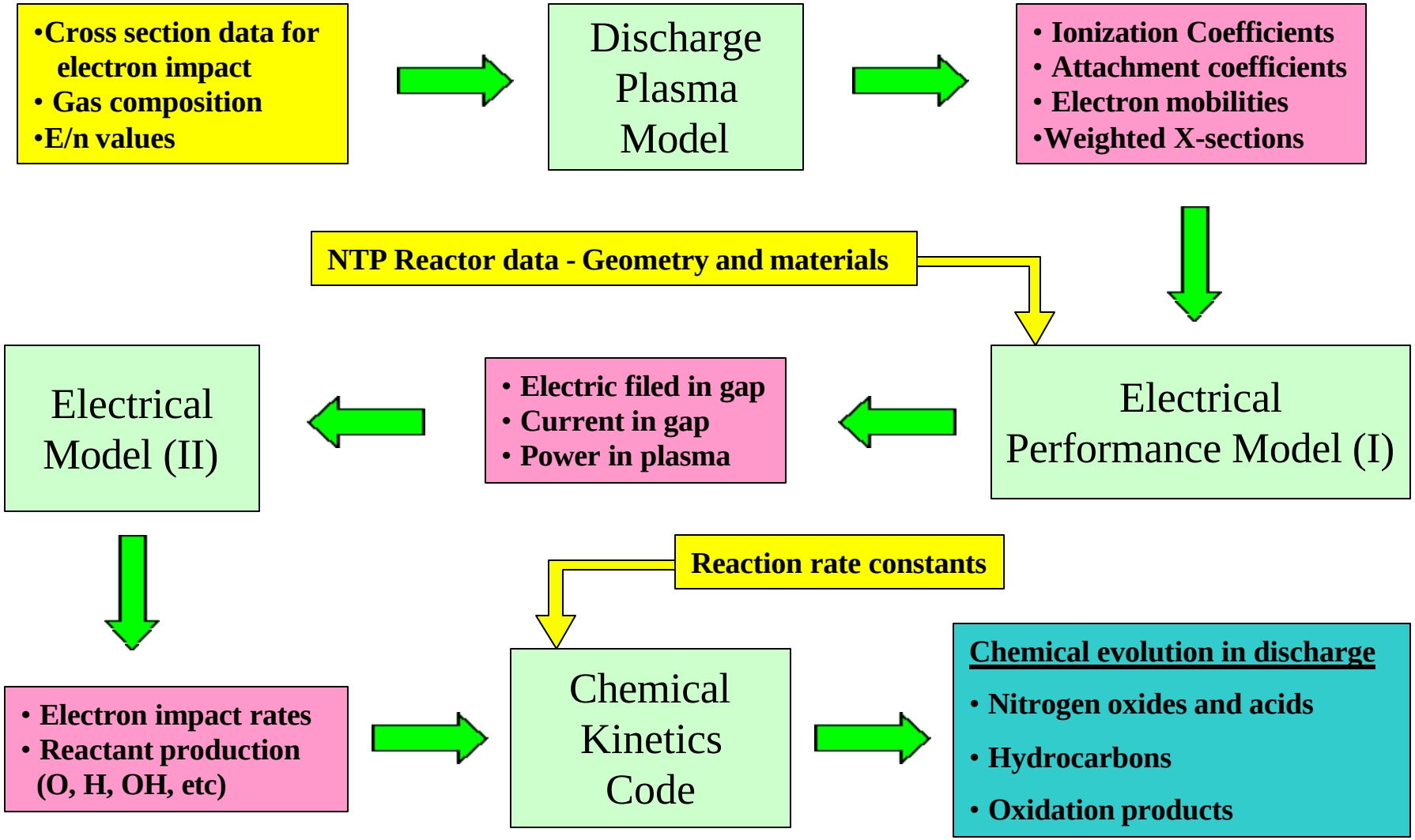

Reactor Modeling
Model Architecture

- Discharge plasma model – ELENDIF
  - Calculates electron energy distribution and rate parameters for electron impact production of ions and reactants
  - Determines electron transport parameters: ionization, attachment, drift velocity or mobility
- Electrical performance models
  - Relates time-dependent electric currents, electron and ion fluxes, electric field, and power deposited in plasma to geometry, materials, and time-dependent driving voltage
  - Calculates power and reactant production rates over space and cycle
  - Versions for detailed time-dependence model and “ultimate performance” model for hard electrical driving
- Chemical kinetics code – CHEMKIN
  - Calculation of subsequent NOx chemistry from radical formation

Reactor Design

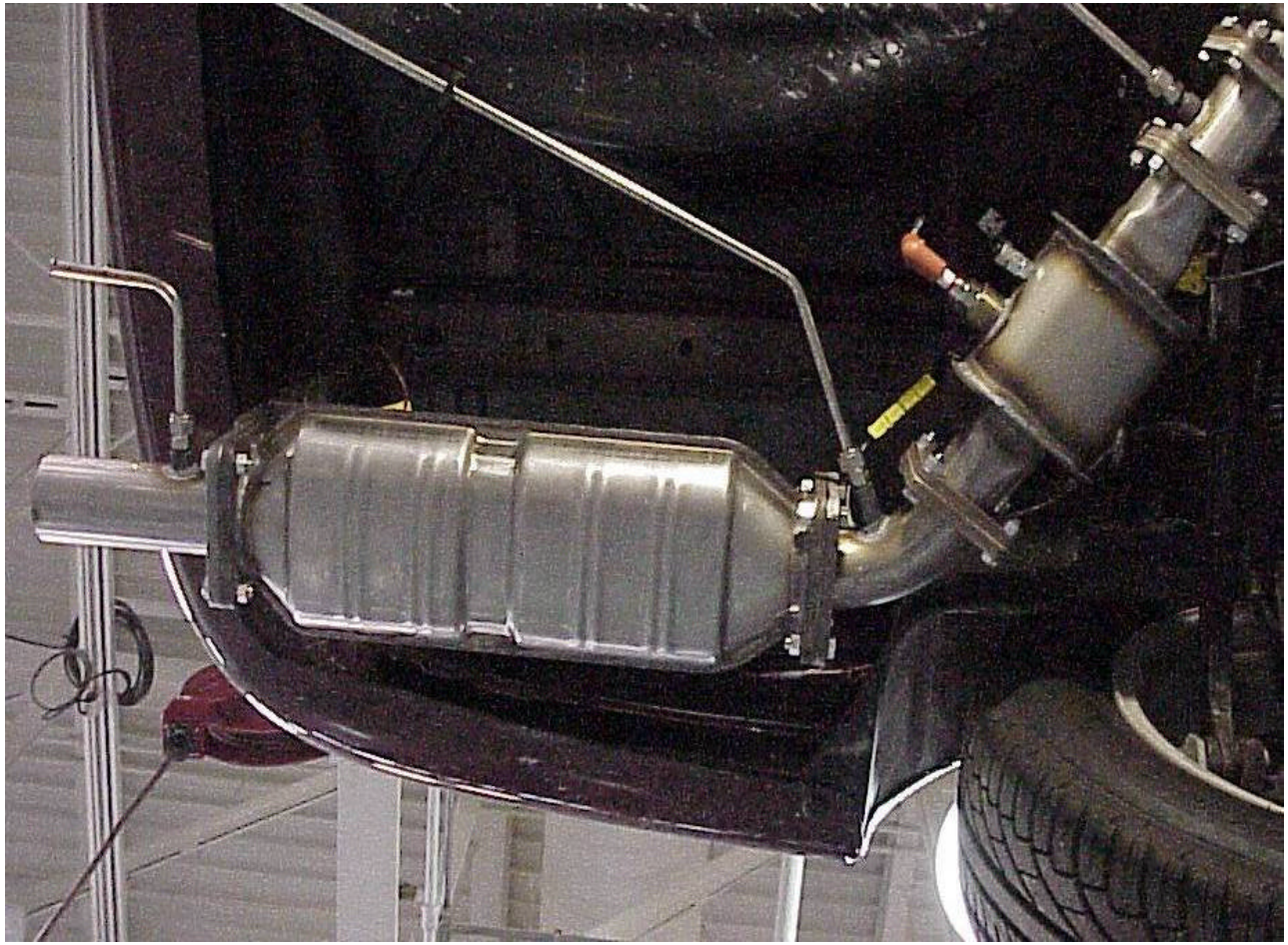

- Reactor Can
  - Weight: 3.3kg
  - Length: 121mm
  - Width: 120mm
  - Height: 110mm
- Reactor Brick
  - Length: 165mm
  - Width: 137mm
  - Height: 83mm

Power Supply
Fuel Consumption

Fuel Use as a function of Additional Electrical Load
(from Luxembourg data on Opel Vectra 2.0 Dti)

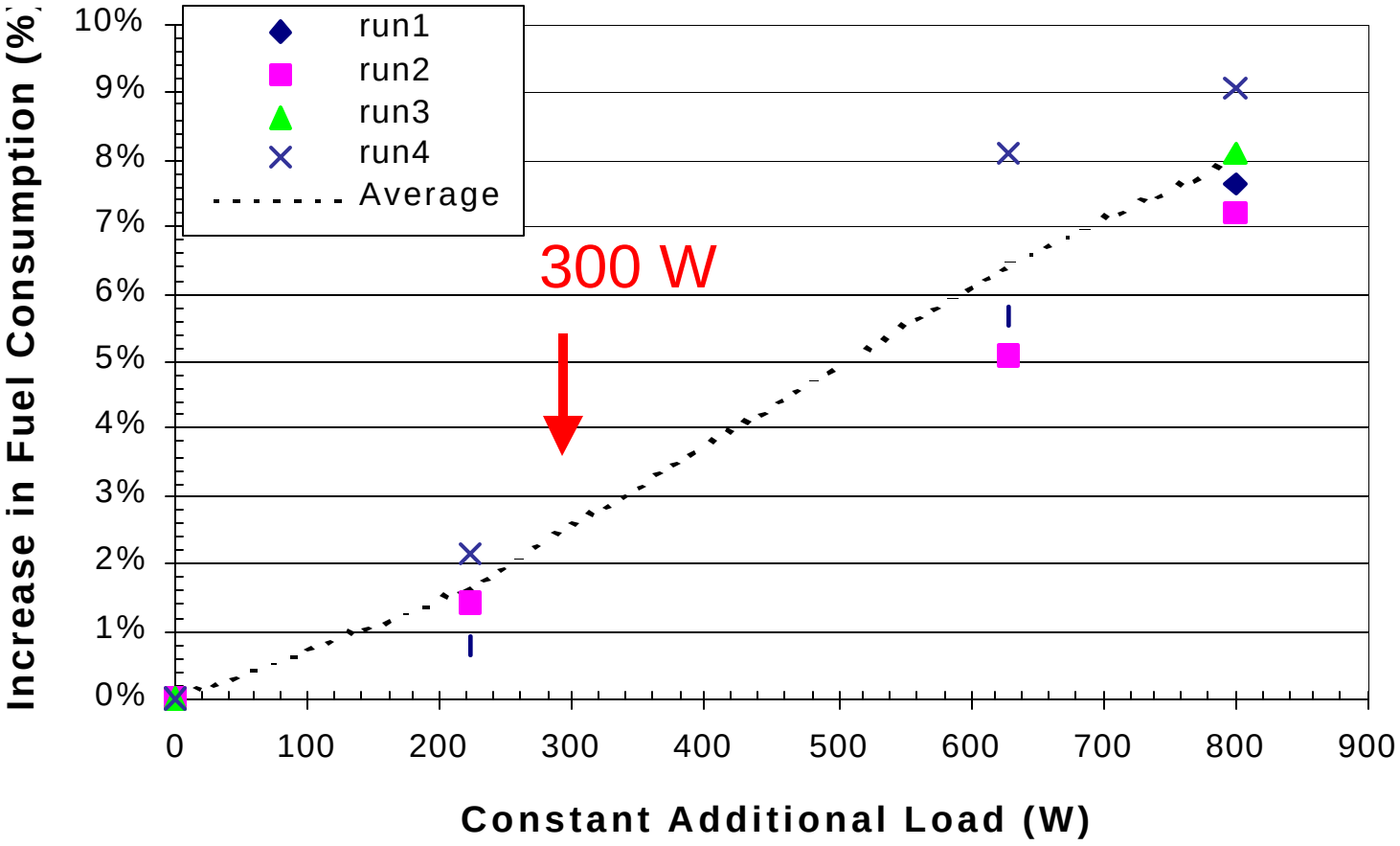

Power Supply
Fuel Consumption

- Power used vs. fuel economy penalty
  - Target
    - » 2-3% fuel economy penalty
- How much energy can we use??
  - Calculated (based on emission data)
  - European driving cycle testing (Opel vectra w/ constant electrical loads)
  - Customer input (1kW=0.8l/100km on cycle)
    - » 300 W acceptable on cycle
- ⇒ Target power consumption
  - 300 W average on driving cycle
  - 1000 W peak

Power Supply Current Configuration

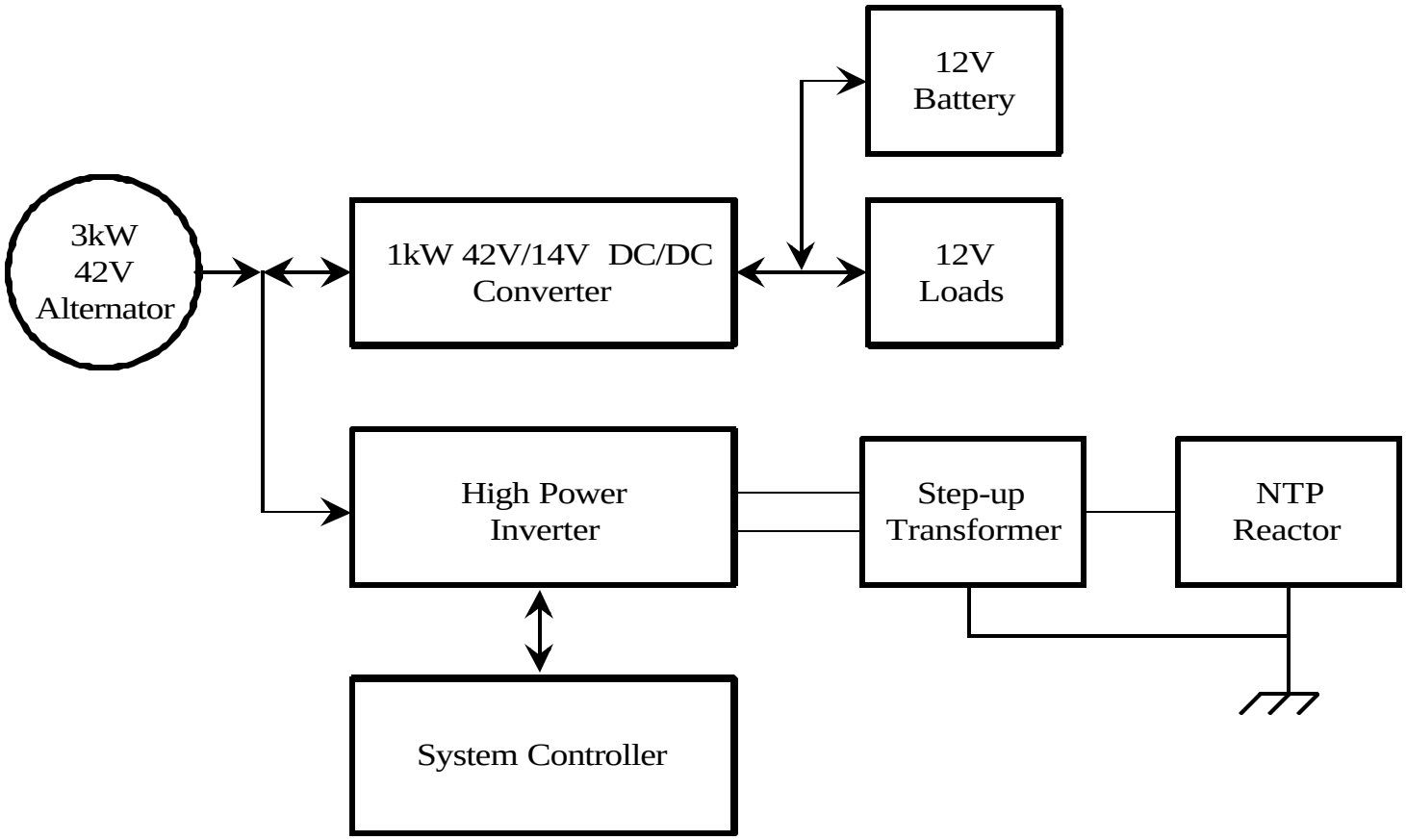

Vehicle Integration Future Direction

- Reduce power consumption
  - Additional Hydrocarbons
    - » Balance between electrical and fuel use for total fuel penalty
    - » EMS Solution (EO emissions)
    - » Post injection methods
    - » Supplemental HC injection
  - Optimize Power Delivery System
  - Optimize Reactor Design with respect to power efficiency
- Reduce cost
  - Lower power design (300 W average, 1000 W peak)
- Reduce size
  - Integrate components
- Meet emission and electrical targets

Effect Of HC Injection - Idle

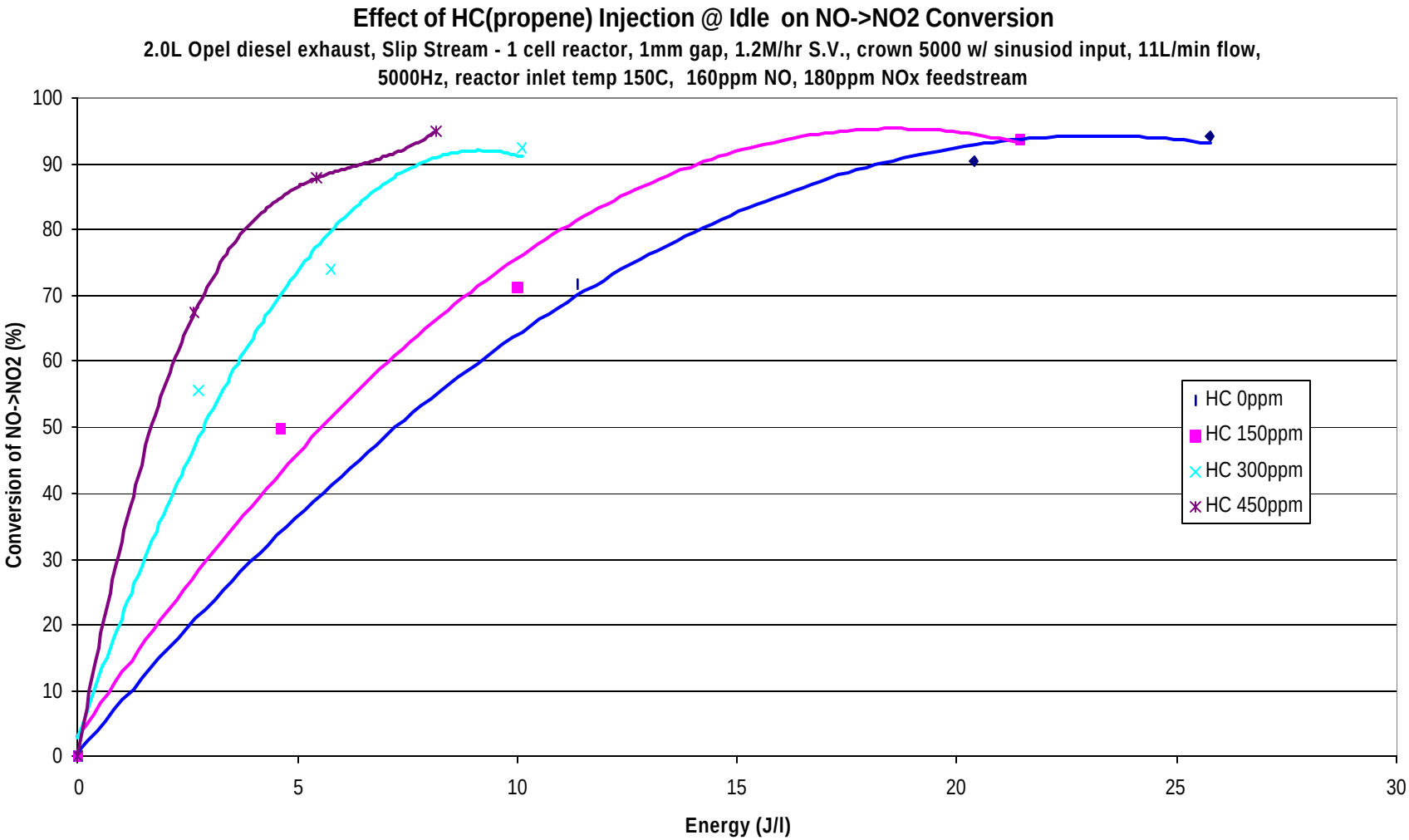

Vehicle Integration
Future Partitioning

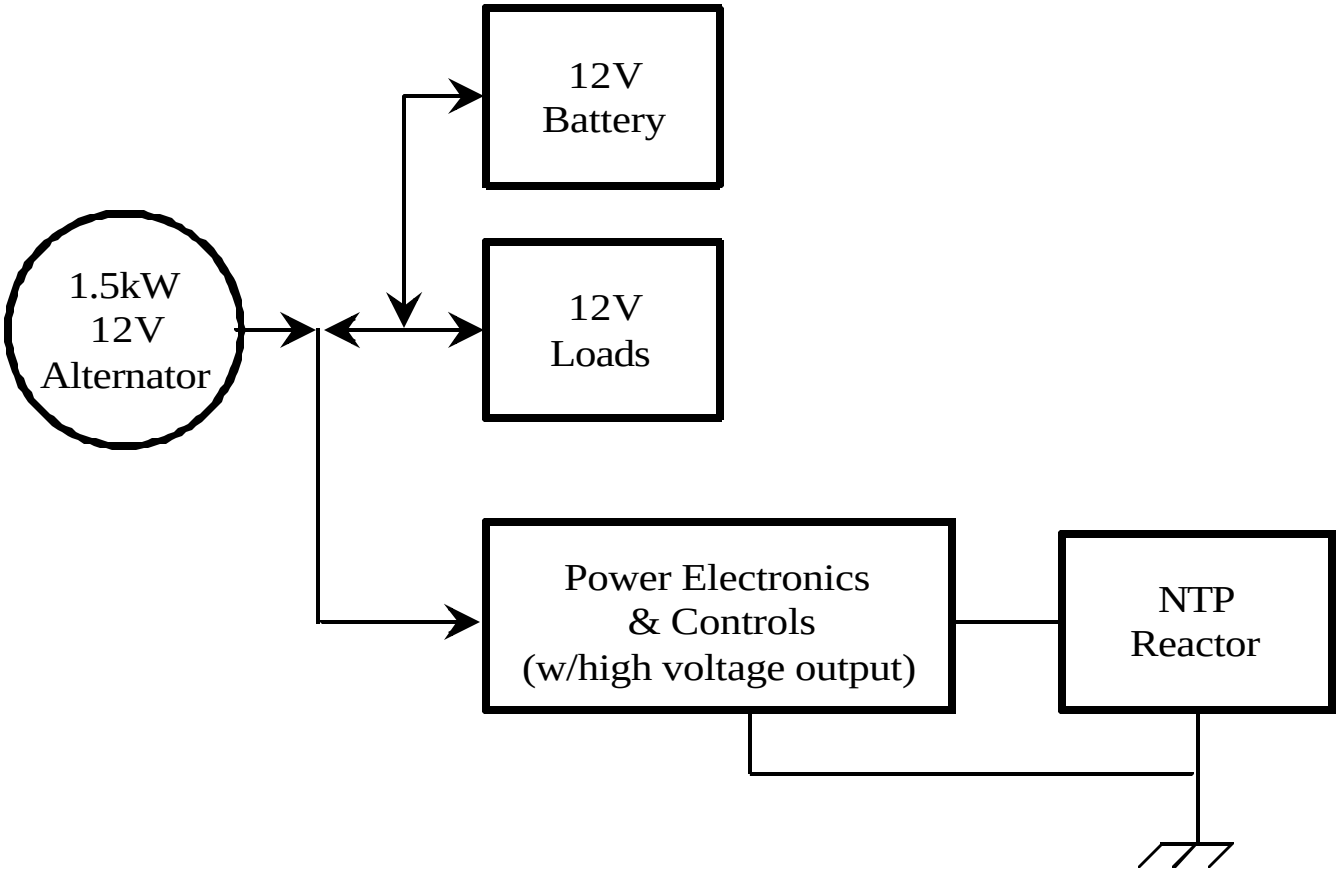

Catalyst and Mechanisms Targets

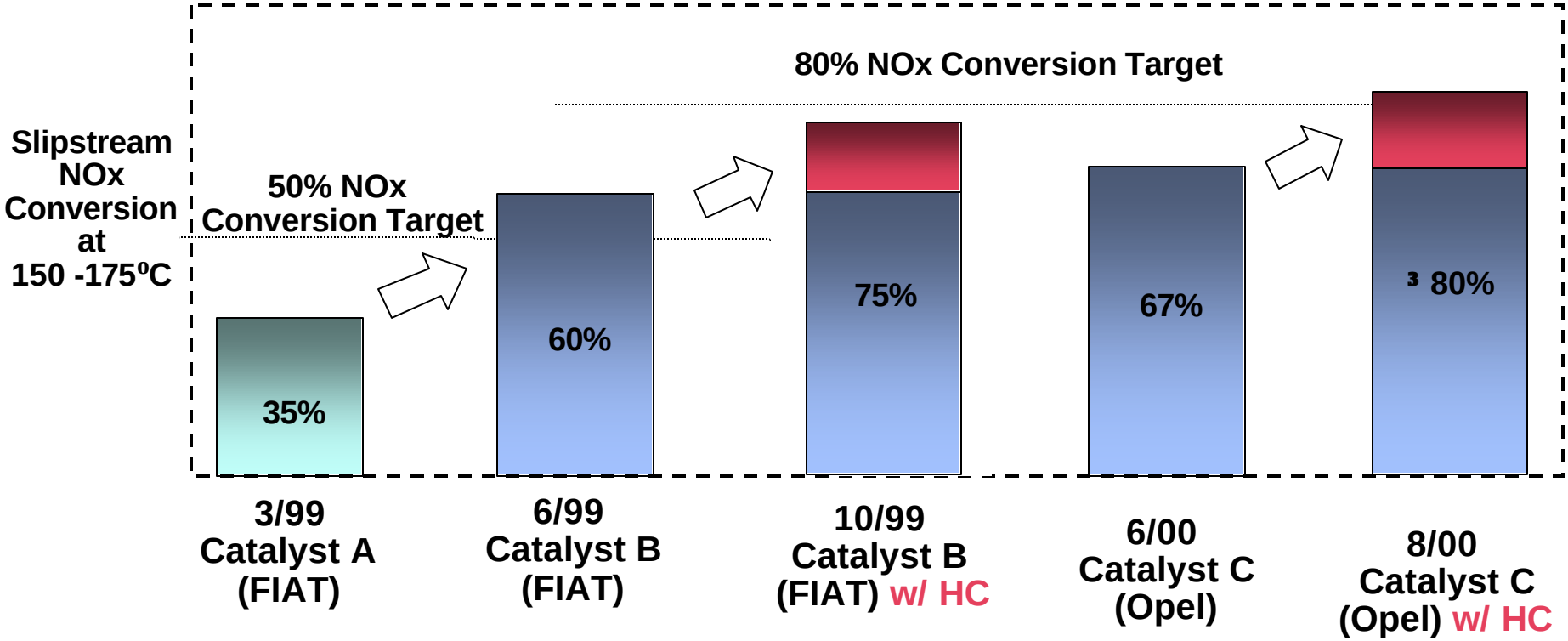

- System NOx conversion has increased through time
- Similar results with exhaust from two vehicles with low HC levels

DELPHI Automotive Systems

Particulate Control - DPF Regeneration

- Regeneration: The Challenge
  - Particulate mass captured in the DPF is removed by “regenerating” the filter. Regeneration is accomplished by combusting the carbon and HC mass captured in the filter.
  - Natural soot ignition temperature: 550°C - 600°C. This temperature range greatly exceeds the typical diesel exhaust temperature under most driving conditions.
  - Combustion of the trapped carbon and HC can create a large exotherm which can melt or damage the trap; particularly at low engine flow.
  - Consistent, reliable regeneration of the trap is the biggest technical challenge to the DPF system.
- Regeneration System Types
  - Active Regeneration Systems
    - Heat the exhaust gases or filter above the particulate ignition temperature
    - Examples: burners, electrical heat, microwave
  - Passive Regeneration Systems
    - Lower the particulate ignition temperature either by adding a catalyst to the trap or fuel, or by forming a stronger oxidizing agent in the exhaust gases (NO_2).
    - Competing technologies:
      - Fuel additives
      - Catalyzed traps
      - NO_2 from oxidation catalyst
      - NO_2 from Non-Thermal Plasma

DELPHI
Automotive Systems

Why a NTP Reactor Instead of CRT?

- Generates NO_2 below 250° C.; in addition, NTP generates other species which may also contribute to the oxidation of soot at low temperatures.
- NTP performance not affected by sulfur in fuel.
- Generates appropriate NO_2 levels needed for a reliable filter regeneration.
- NO to NO_2 conversion efficiency higher than 70%

Proprietary Catalyst Mechanistic Studies

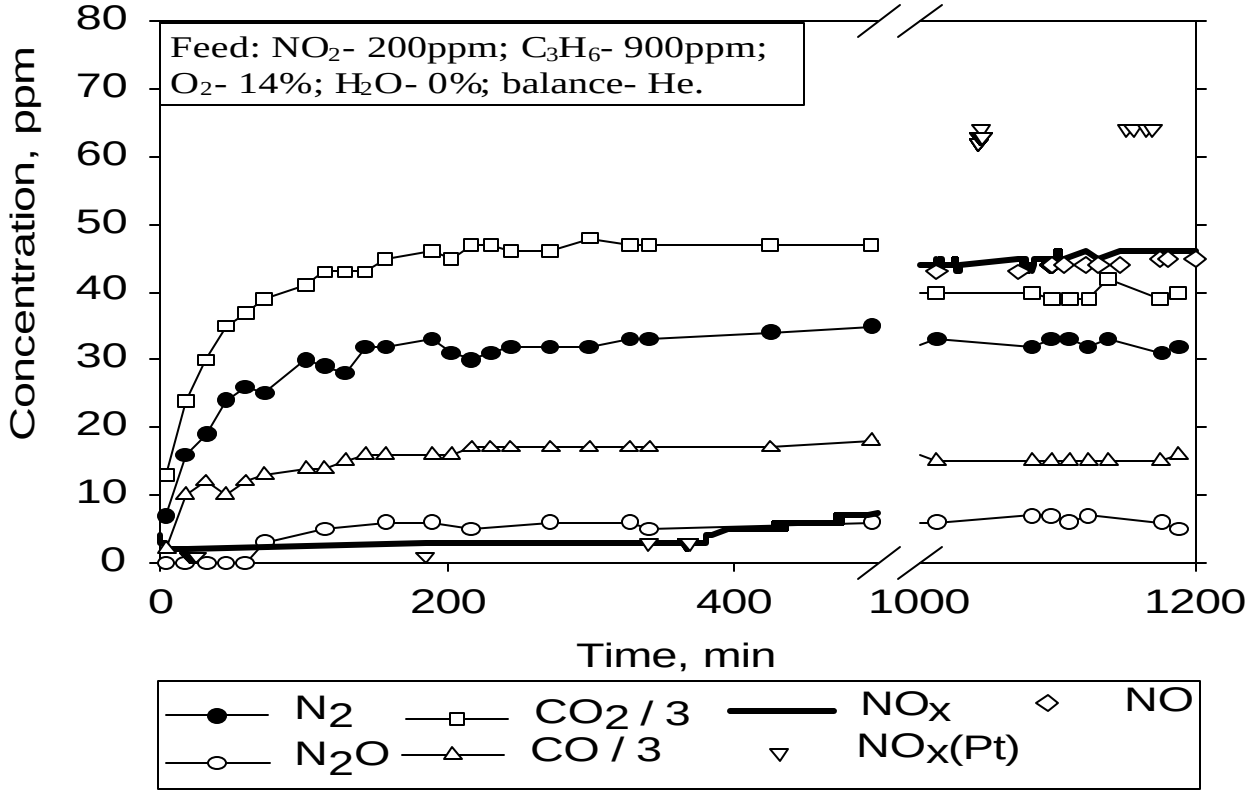

- At 150°C (dry feed), N_2 and CO_2 grow in together , showing HC selective catalytic reduction of NO_2 to N_2.
- NOx adsorption saturates much more slowly (> 8 hours).

Proprietary Catalyst Mechanistic Studies

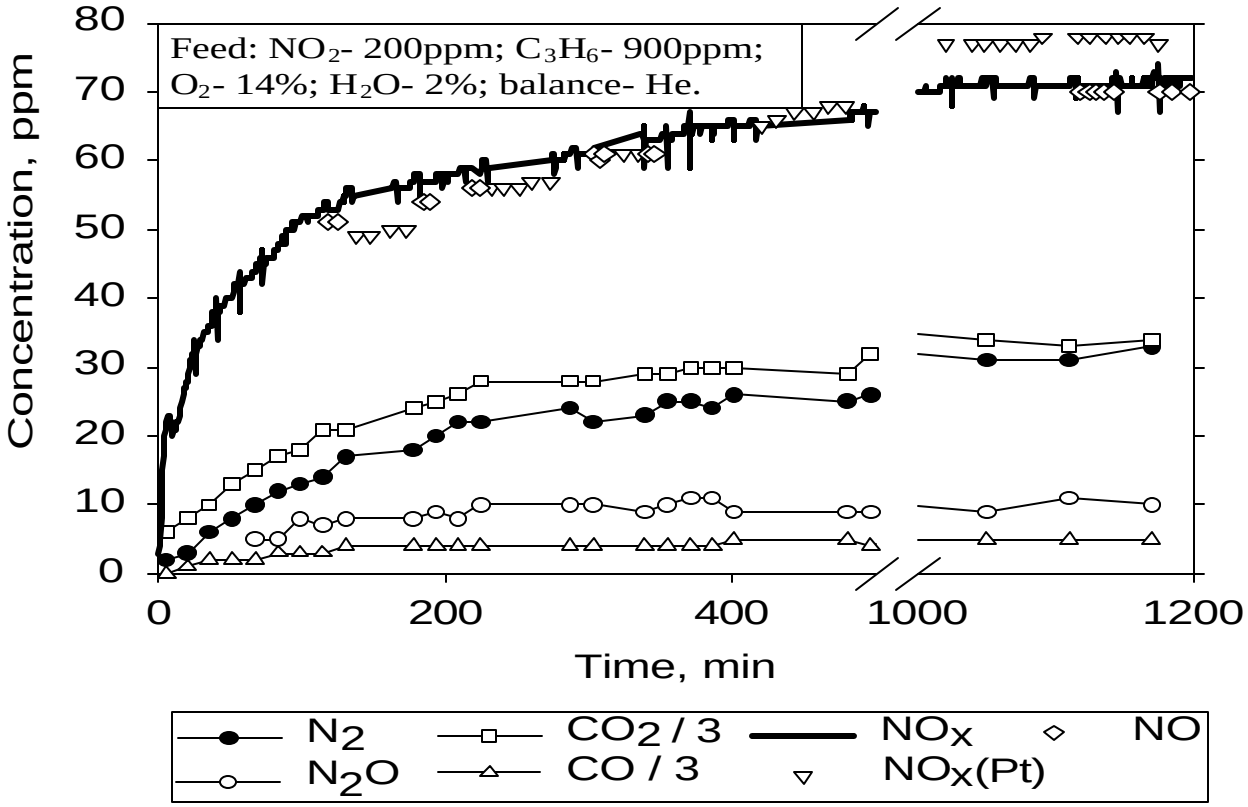

- With water present, NOx adsorption saturates rapidly.
- Catalysis forming N_2 and CO_2 still proceeds as when dry.
- NOx adsorption and reaction to form N2 are decoupled.

Proprietary Catalyst Mechanistic Studies

MAIN CATALYST FINDINGS

- Similar time dependence of N_2 and CO_2 formation clearly demonstrate hydrocarbon selective catalytic reduction (HC-SCR) of NO_2 to form N_2 at 150°C.
- The same quantitative relationship between N_2 and CO_2 is observed between 150°C and 200°C.
- Very different time dependence of NO_2 adsorption and catalytic reaction shows they are decoupled and may occur at different sites.
- Dominant product of NO_2 adsorption is NO.
- At 200°C for a space velocity of 12,600 h^{-1} the conversion of NO_2 to N_2 is 50%.
- Optimization of the catalyst should lead to higher activities.

DELPHI
Automotive Systems

Summary

- Key NTP Benefits
  - Low temperature operation
  - Not affected by sulfur
  - Flexible options:
    - » NOx reduction
    - » Particulate matter reduction
    - » Both
  - Applicable to the full range of diesel vehicles and direct injection gasoline vehicles.
  - Potential of combining de-pollution and noise reduction.

- The NTP exhaust aftertreatment system has the potential to make a difference; therefore the team is aggressively pursuing this technology in order to turn it into a commerciable product and be first in the market.

- Timing
  - Target Production 2004 CY (2005 MY)
  - Samples available end of 2000 - beginning 2001