marlow
industries, inc.

Thin Film Thermoelectrics from an Applications Perspective

J. Sharp
A. Thompson
H. Lyon
Marlow Industries Inc.

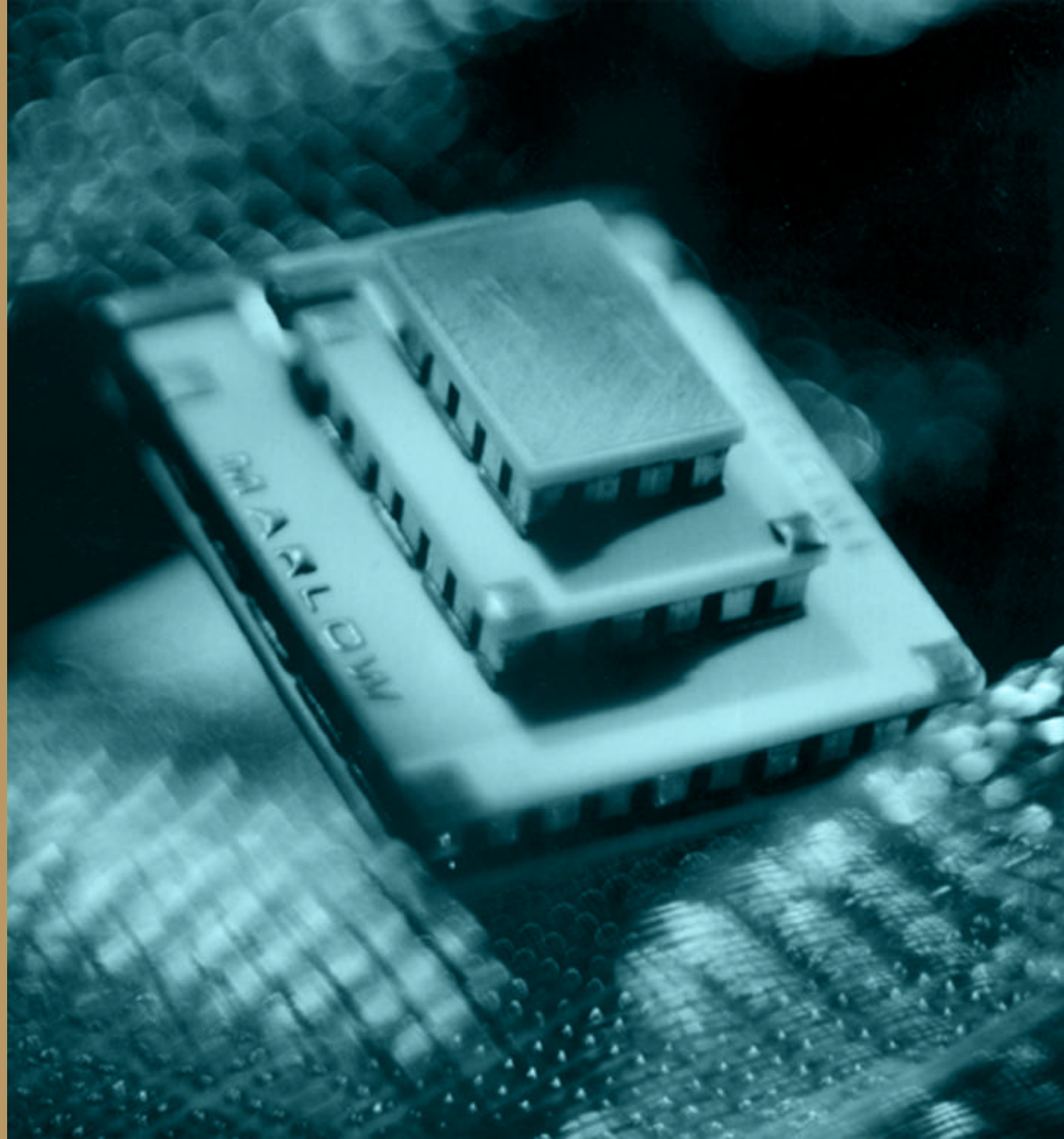

Alternate Phenomena

Comparison of different thin film formats for electronic cooling		
Format	Strengths	Weaknesses
Peltier, Perpendicular	No Substrate Thermal Shunt Relatively robust legs	Contact Resistance Substrate Thermal Resistance P/N Co-location
Peltier, Parallel	No Contact Resistance Problems High Voltage, Low Current	Substrate Thermal Shunt Fragile legs, if unsupported P/N Co-location
Ettingshausen	No substrate Thermal Shunt No Contact Resistance Problems No P/N Co-location Robust legs	Magnets Substrate Thermal Resistance

The practical advantages of Ettingshausen formats make it worthwhile to see what can be Achieved with thermomagnetic cooling at the micron scale.

The Heat Flux Problem

Assumptions:

- Perpendicular Peltier Cooling
- Film Thickness = *t*
- Lateral dimensions w_1 and w_2
- Resistivity $\rho = 10^{-3}\ \Omega$-cm
- $T_c = 250\ ^oC$, $\Delta T = 50\ ^oC$

Calculate optimum current (ΔT_{max} or Q_{max})

- I_{opt} = Seebeck * T_c/ Resistance
- Resistance = $\rho\ t / (w_1 \times w_2)$
- *T,* w_1, w_2 expressed in cm
- I = 50 amps x $(w_1 \times w_2)/t$
- *t < 0.001 I > 5 x* 10^4 *amps x* $(w_1 \times w_2)$

Constraint on lateral dimensions to get a reasonable current

- $(w_1 \times w_2) < 10^{-4}$ to get a desirable current

Power density (P) is now set

- Need a good packing density to avoid inordinate passive load
- A real density of junctions must be ~ 25% of $(w_1 \times w_2)^{-1}$
- P = Seebeck x I x T_c / (4 x $(w_1 \times w_2)$)
  or P = Seebeck x T_c x 50 amps / (4 x *t*)
- *P* > 600 W/cm for *t* < 10^{-3}
- Cold side flux is less than this.
  Hot side flux is more.

Conclusions

- **Severe challenge for thermal pathway**
- **Direct result of film thickness** (10 microns assumed) **and current requirement.**
- **With 1 W/cm-K materials (alumina) a thickness of 100 microns between load and cold or hot junction causes a 10 ^{o}C loss of** ΔT

Ettingshausen effect

The current, temperature gradient and magnetic field are all orthogonal.

To measure the temperature difference

- Located thermocouples on the top surface of the Bismuth film near the center and in a groove sliced in the substrate.
- At the bottom of the groove, the substrate was thinned to approximately 75 microns in order to place the thermocouple near the bottom surface.
- The magnetic field was provided by two NdFeB permanent magnets. The area of the magnets was 0.5” X 1.0” placed 0.25” apart.
- A magnetic field of 0.28 Tesla was obtained in the gap between the magnets where the temperature measurements were made

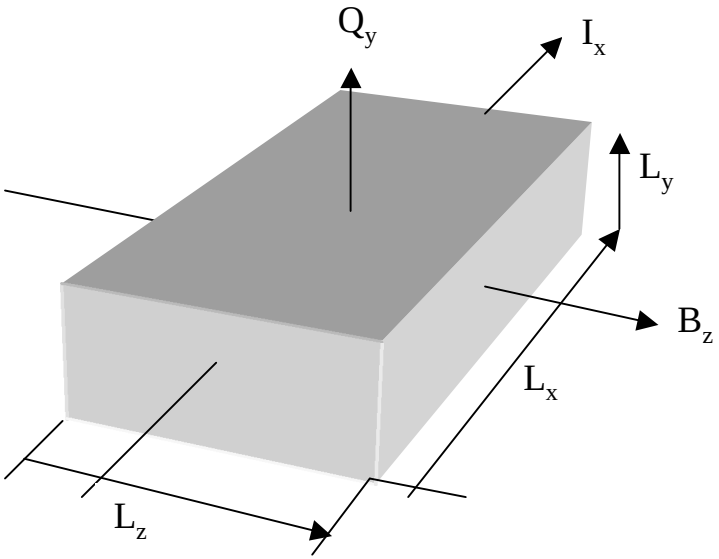

Ettingshausen effect

- Bismuth films were deposited by e-beam evaporation on alumina substrates.
- The substrates were unheated during evaporation.
- The films were protected with an overcoat of silica.
- HF acid was used to remove strips of silica at each end to enable electrical contact.
- Measurements before and after a 250 ^{o}C heat treat in argon indicated no change in properties.
- We confirmed by measurements that the electrical resistivity and Seebeck coefficient of the films were nominally those of Bismuth.

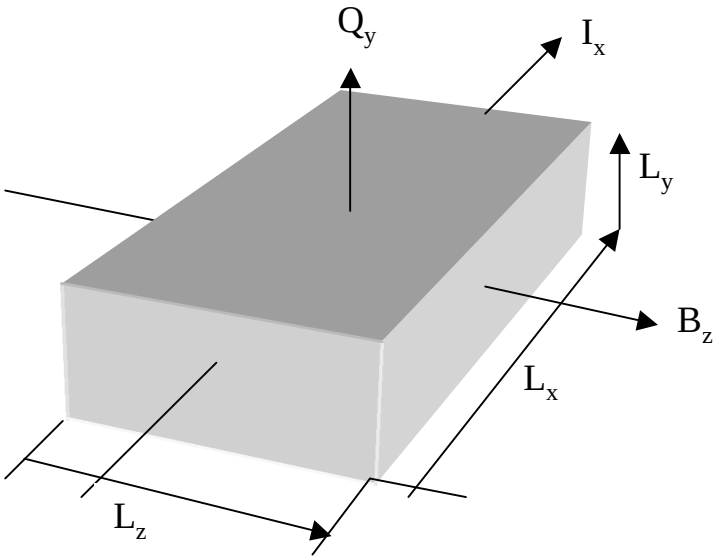

Ettingshausen effect

Results from a 1 micron film with a current of 0.2 amperes.

We assumed the measured ΔT is along the trigonal axis of Bismuth but we did not measure the orientation.

Base Temp	Polarity	Ave Sample T	Delta T (bottom - top)
27	+	43.35	+0.32
27	-	44.238	-0.46
-73	+	-53.2	-0.51
-73	-	-53.4	-1.69

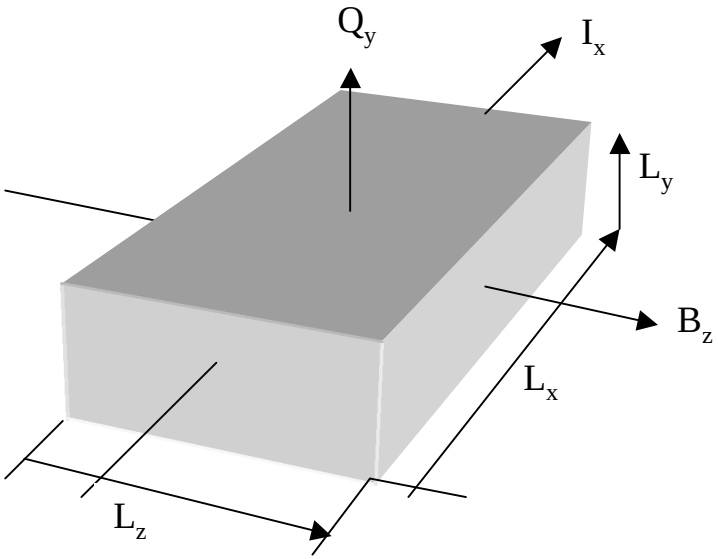

The + polarity is where the top is cooled relative to the substrate.

There is another ΔT associated with the inadequate heat sinking.

Ettingshausen effect

- The ΔT caused by the Ettingshausen effect is 0.39° C at a sample temperature of 44° C and 0.59° C at the sample temperature –53° C.
  (This was calculated by taking the difference of the positive and negative polarity DT at each point and dividing by 2)
- We could get much more ΔT if we could approach maximum current
- But … that would be way too much power, which is the thin film problem,
- To do better we would need a much thicker film that is less wide in the direction of the magnetic field.
- Our plan was to get data at lower temperatures but our assembly came loose from the base after the –73° C data were taken.
- As meager as it seems, a 0.59° C across a 1 micron film may be the largest measured.

Base Temp	Polarity	Ave Sample T	Delta T (bottom - top)
27	+	43.35	+0.32
27	-	44.238	-0.46
-73	+	-53.2	-0.51
-73	-	-53.4	-1.69

Conclusion

- ***Neither Peltier nor Ettingshausen cooling makes sense for material thickness < 100 microns in the direction of the temperature gradient.***
- ***It may be possible to use films that are thin perpendicular to the temperature gradient but they will need to be supported in some exotic way.***
- ***We need a thick film technology to enable our electronic refrigeration dreams***