High Efficiency Thermoelectrics for the Aircraft, Aerospace and Refrigeration Industries:

Potential Applications within United Technologies Corporation

Rhonda Willigan
United Technologies Research Center
East Hartford, Connecticut 06108

DOE High Efficiency Thermoelectrics Workshop
February 19th, 2004 San Diego, CA

United Technologies Corporation (UTC)

UTC is a $31 billion, globally owned company made up of 7 operating units

Pratt & Whitney

Otis

Carrier

Chubb

Sikorsky

Hamilton Sundstrand

UTC Power

United Technologies Research Center (UTRC)

UTC Opportunities for Thermoelectrics

Many opportunities exist across UTC for both power and cooling

Business Opportunity	***UTC Operating Unit***	***Power***	***Cooling***
Waste Heat Recovery from ECS/TMS units	Hamilton Sundstrand	X	
Waste Heat Recovery for Sensors and Actuators	Pratt & Whitney	X	
Reduction of IR Signals	Pratt & Whitney	X	
Waste Heat Recovery from Air/Fuel Cooling Loops	Pratt & Whitney Hamilton Sundstrand	X	
Waste Heat Recovery from Existing Heat Exchangers	Pratt & Whitney Hamilton Sundstrand	X	
Heat Injection into Hydrogen Storage Media	UT Power	X	
Waste Heat Recovery from SOFC	UT Power	X	
Solid State Heat Pump for Engine Control Electronics	Pratt & Whitney		X
Cooling of Electronic Computer Chips	Pratt & Whitney Hamilton Sundstrand		X
Cooling of motor driven actuators	Hamilton Sundstrand		X
Cooling of external viewing sensors	Hamilton Sundstrand		X
Cooling of space suit and terrestrial suits	Hamilton Sunderland		X

P&W Aircraft Engine Thermal Environments

Aircraft engines offer various temperature differentials

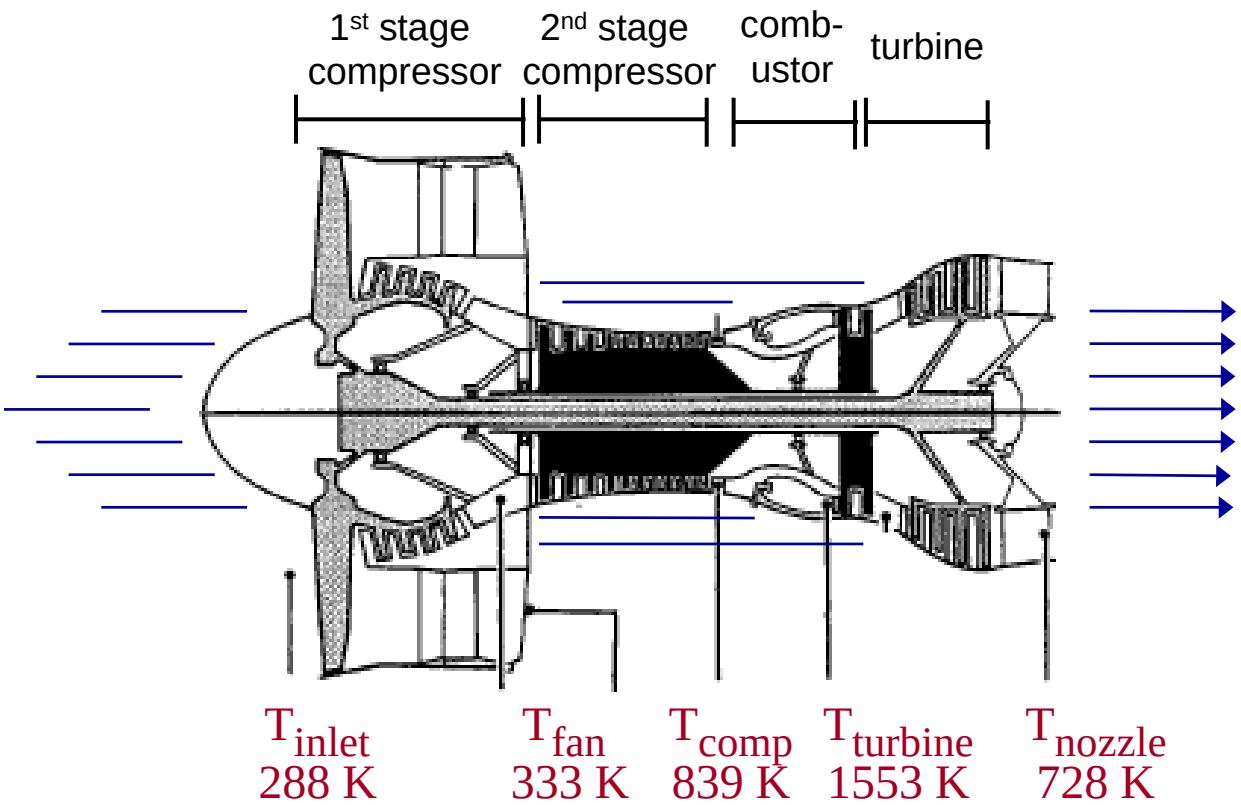

Location	ΔT
Fan – Compressor	506 K
Compressor – Turbine	714 K
Turbine – Nozzle	825 K
Component - Air	84 –1304 K

P&W Engine and Aircraft Power Requirements

TE power generation offers a wide array of opportunity

Need	Opportunity	Power Requirement
Power for sensor systems	*Local* power generation	1 – 100 W
Power for engine functions (computers, valves)	*Local* or *Centralized* power generation	1 – 10 kW
Power for aircraft functions (electric, pneumatic power)	*Centralized* power generation	100 – 1000 kW

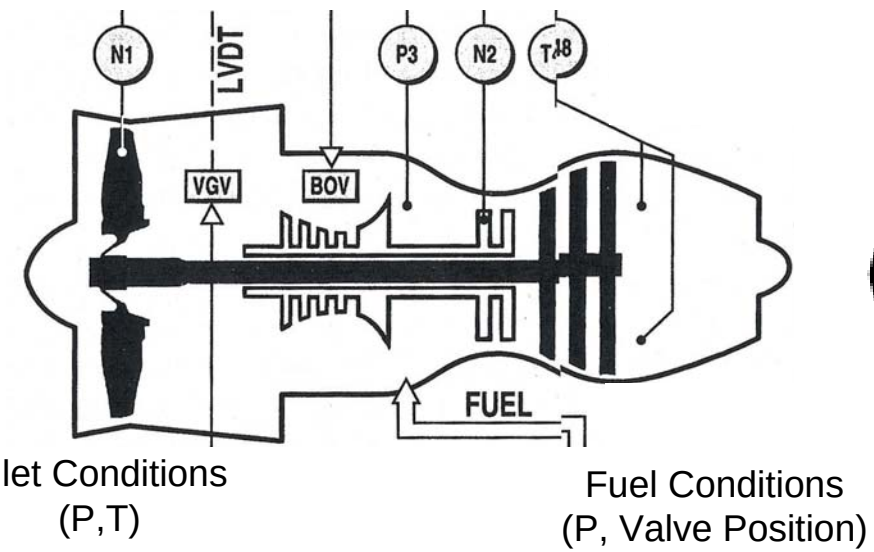

Energy Harvesting for Self-Powered Sensors

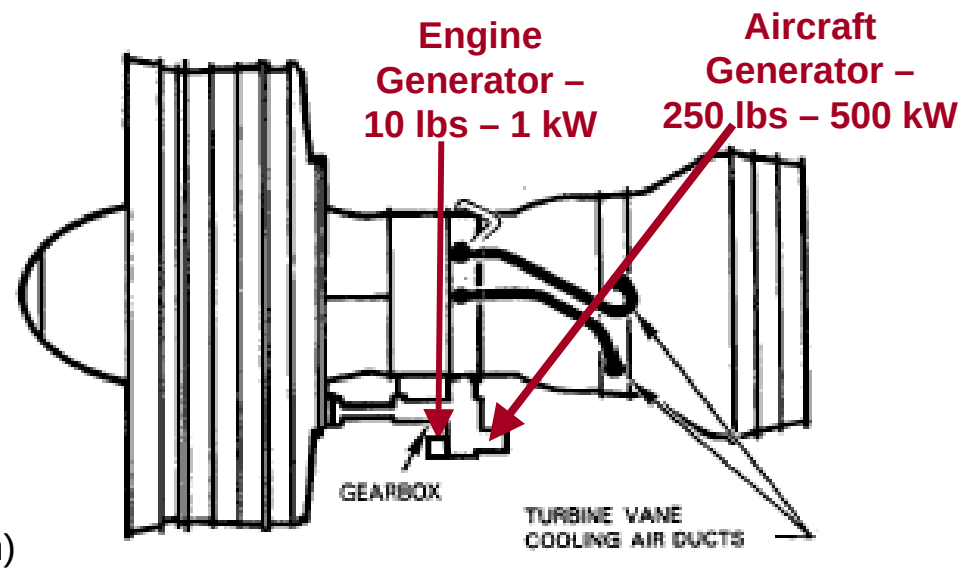

Aircraft and Engine Power Generation

Locally Powered Engine Sensors

1 – 100 W, Thermoelectrics could harvest local power, simplifying instrumentation

- Instrumentation for engine testing represents substantial cost due to installation
- New controls architectures are driving increased Prognostics and Health Management
- Each sensor installation represents a power and data wire
  - Thermoelectrics can enable “stick-on” installation by powering sensor system
  - Sensor only consumer 1 Watt of Power

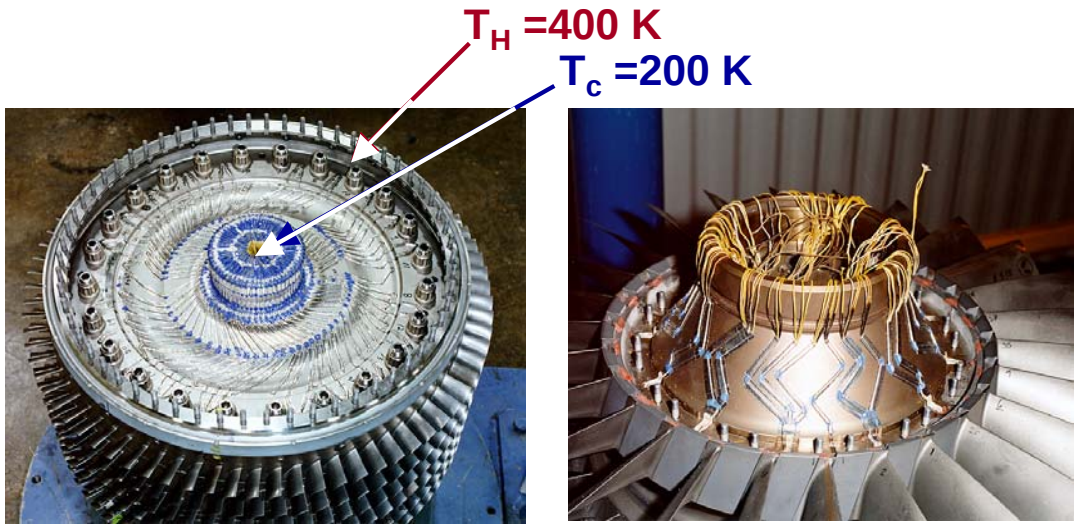

COMPRESSOR FAN

Challenges

- Sensor locations do not necessarily have access to both heat sources and sinks
- Temperature differentials are small

Power Generation from Engine Cooling Loops

1-10 kW, Thermoelectrics could meet engine electrical needs

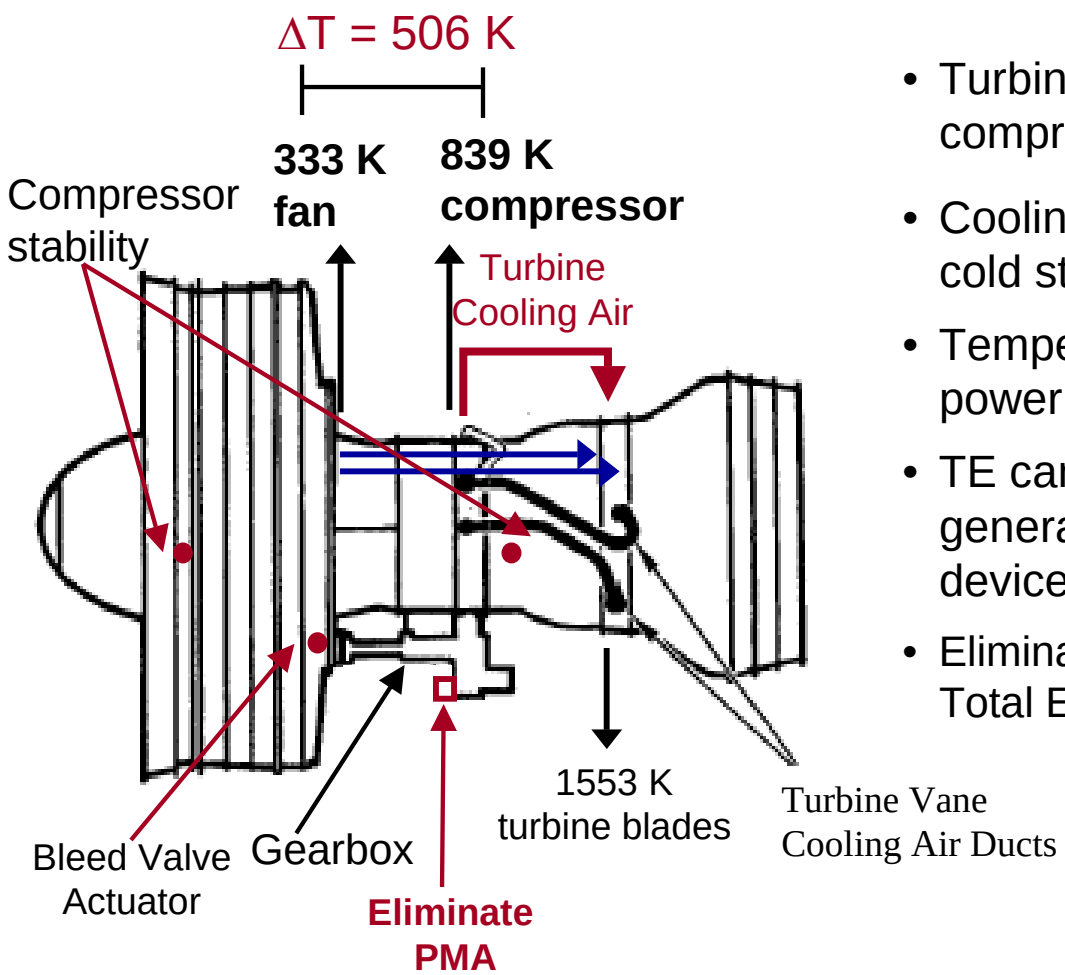

- Turbine Cooling Requires relatively cold compressor air to cool turbine
- Cooling air is opportunity for bringing hot and cold streams in proximity
- Temperature differential could translate into power for actuation, as well as instrumentation
- TE can exchange compressor heat to fan and generate power for engine; 200-1000 cm^2 device could plate the duct
- Elimination of Permanent Magnet Actuator (PMA); Total Engine Wire and Harness Weight is 150 lb.

Challenges

- Actuator locations do not necessarily have access to both heat sources and sinks
- Ideally placed TE devices (near source and sink) will not enable a wireless system.

Power Generation from an Engine Nozzle

100 kW–1MW ,Thermoelectrics could meet aircraft electrical needs

- Engine is primary source of electrical power for the aircraft
- Current state requires engine to generate Hydraulic, Electric, Fuel Pressure and Pneumatic power through complicated gears, generators, pumps and bleeds
- Industry strives for all electric aircraft to simplify power generation and distribution
- TE power generation would eliminate gearbox, towershaft, generators and pumps ~ 400 lbs/engine
- Power generation aids in removing energy in already hot flow – i.e. cooled cooling air

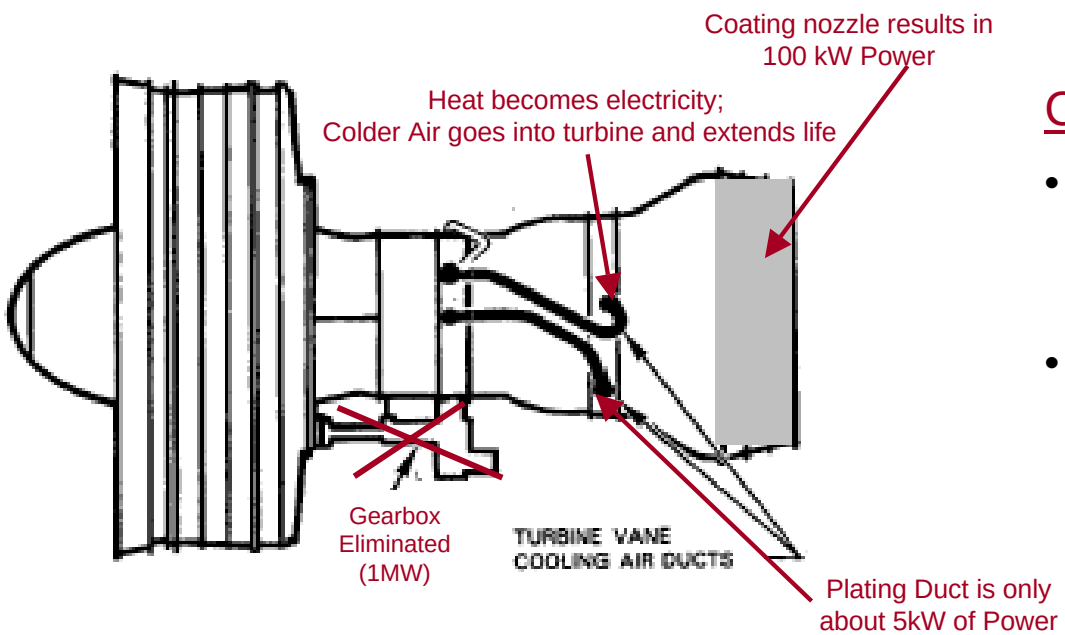

Challenges

- 1 MW of power generation would require 10 m^2 of material per engine
- Difficult packaging problem, though the weight of power generation is only 5 lbs.

Hamilton Sundstrand
A United Technologies Company

United Technologies Research Center

The Aerospace Power Company™

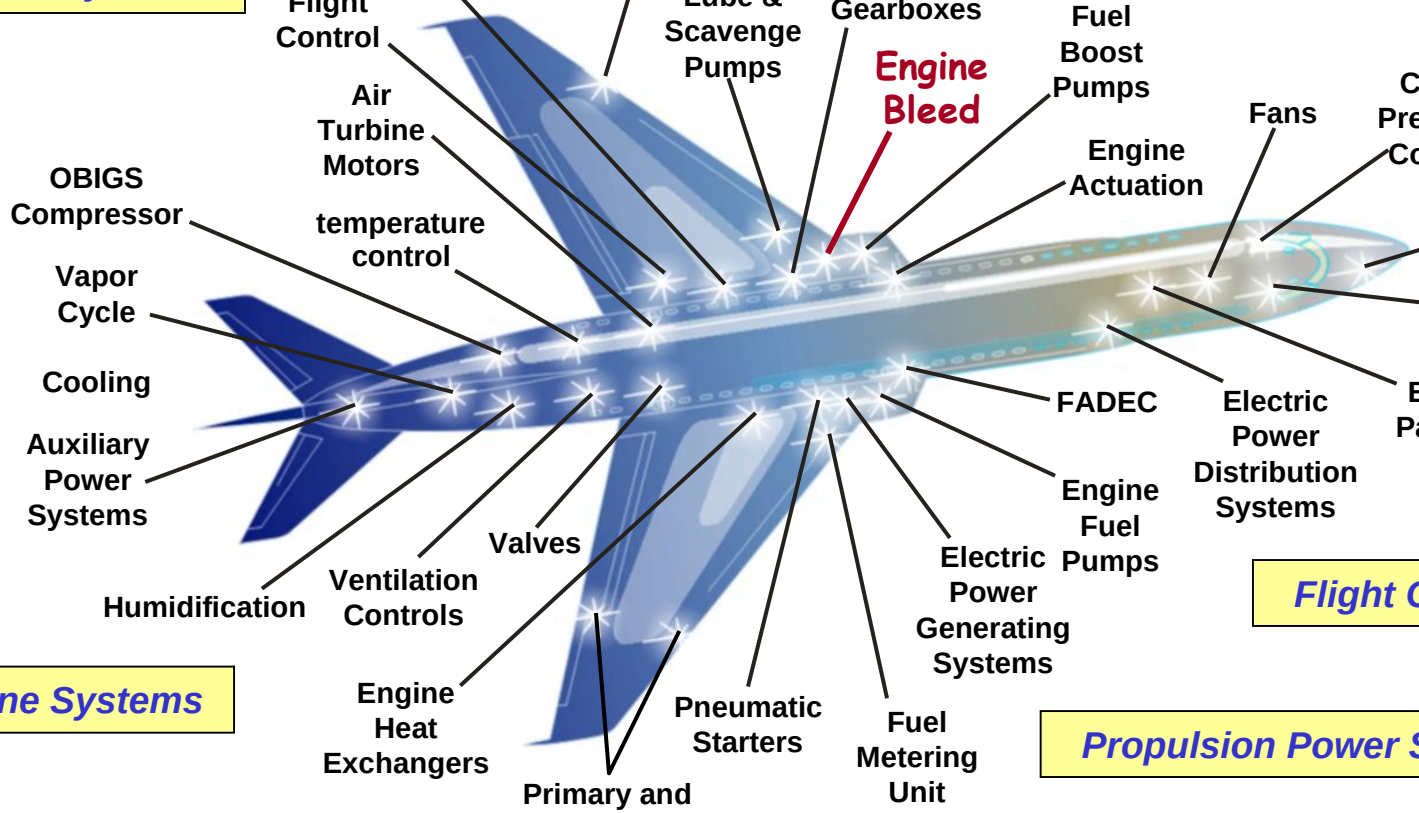

Power Generation from a Hamilton ECS / TMS unit

1 –10 kW,Thermoelectrics could power aircraft cabin valves, sensors

Heat Source	ECS Inlet @ 477K
Heat Sink	ECS Inlet or skin @ 249K (ram air)
Available Heat In	30 - 300 kW
Power Out	3 – 30 kW (assuming 10% efficient)
Area Needed	600 - 6,000 cm^2 (assuming 5W/cm^2 power density)
Area Available	ECS Primary Hex 15,000 cm^2
Uses for Power	Pneumatic System Valves, < 1 W Sensors, and ECS Fan, 1–10 kW

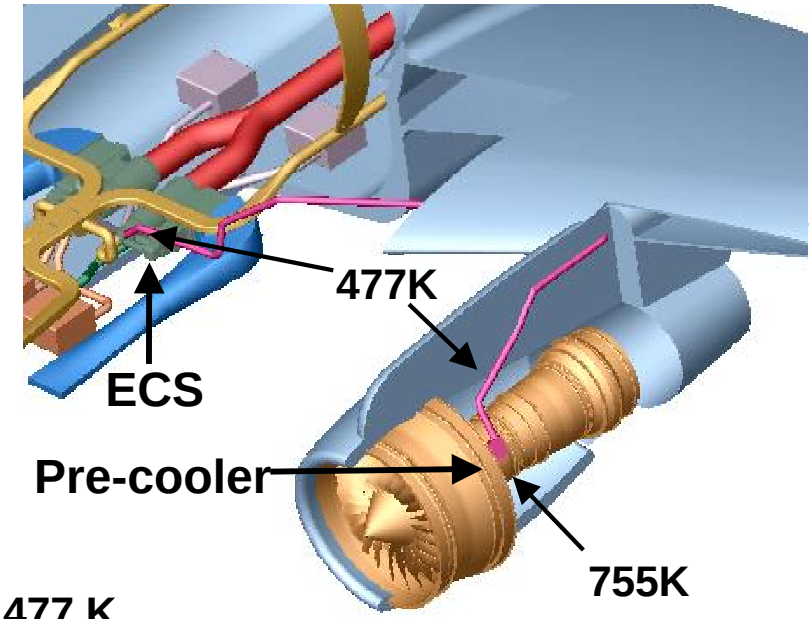

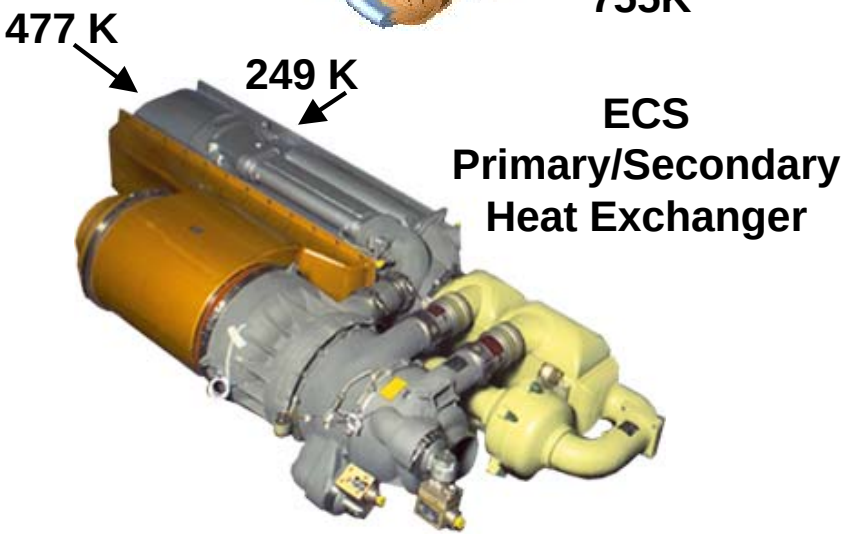

Other Potential Applications across UTC

1.

Cooling of Space Suits
Power Generation from Large, Low Temperature Differentials
(Hamilton Sundstrand)

2.

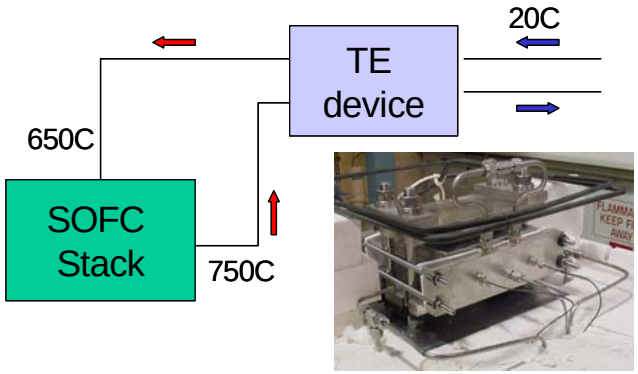

Heat Recovery from SOFC
(UTC Power)

3.

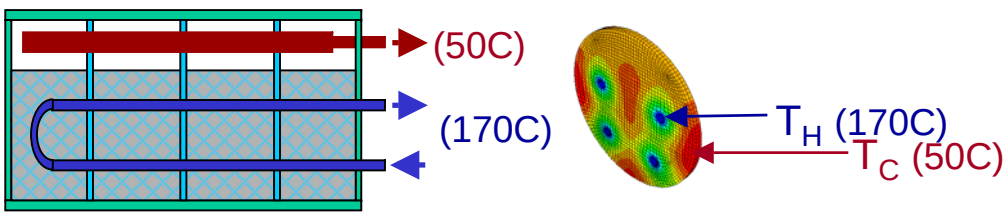

Heat Injection into Hydrogen Storage Media
(UTC Power)

Thermoelectric Challenges

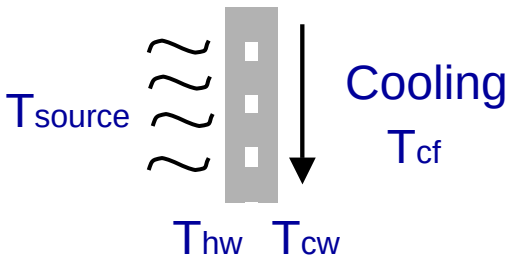

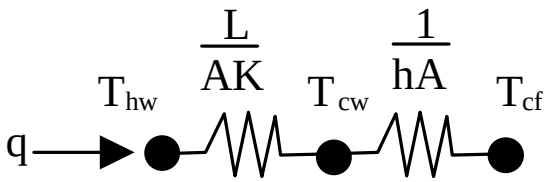

$\Delta T = QR$

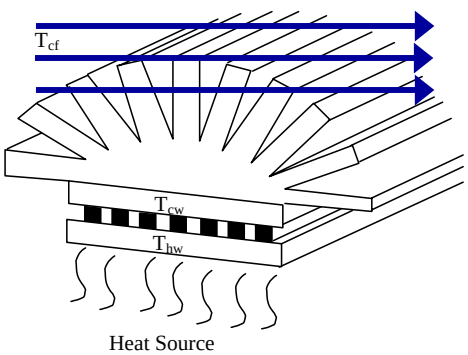

- TE power generation requires substantial ΔT
- ΔT achieved by creating greatest thermal resistance across device.
- Aggressive heat transfer required on both the heat source and sink
- Thin film TE's have small L, hence low resistance
- Low cooling causes T_C to be near T_H
  - Power generation reduced
- High resistance at device will also insulate source and drive up its temperature.

Current Research at UTRC

1. Power Generation

2004 - Develop packaging requirements to integrate advanced TE power modules into an aircraft engine nozzle

Fan Case

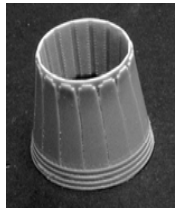

Exhaust Nozzle

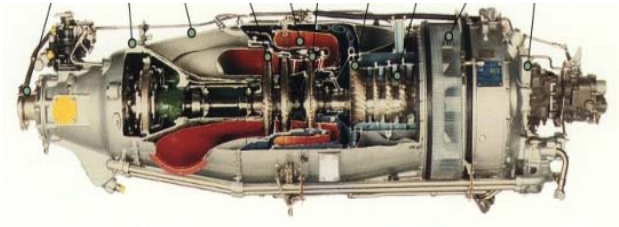

Combustion Liner

2. Solid State Cooling

2004 - Define and select a conceptual solid state cooling system or subsystem that will be competitive to conventional vapor compression system

Transport Truck/Trailer

Residential Air-Conditioning

Commercial Refrigeration

Water Chiller