Clarkson
UNIVERSITY
Potsdam, New York 13699

ELECTRIC ENERGY GENERATION from the EXHAUST OF A LIGHT TRUCK

2004 DOE/EPRI High Efficiency Thermoelectrics Workshop

NYSERDA

Hi-Z TECHNOLOGY, INC.

DELPHI
Driving Tomorrow's Technology

GM

Topics

- Project tasks, organization, & support
- Automobile exhaust (AETEG) system
- System model
- Test
- Commercialization

Tasks

- Phase 1
  - Design
  - Draft commercialization plan
- **Phase 2A**
  - **Build & bench test AETEG**
  - **Test AETEG in light truck**
  - **Verify the AETEG simulation**
- Phase 2B (if authorized)
  - Optimization
  - Commercialization plan
  - Application studies (current & quantum well TEG)

Clarkson UNIVERSITY
Potsdam, New York 13699

Support

New York State Energy Research and Development Authority

Project Funding – Joseph R. Wagner **Senior Project Manager**
Transportation Research

Department of Energy

John W. Fairbanks – Project Manager
Light Truck Clean Diesel Program

Delphi Corporation

Wind tunnel testing services of up to 2 weeks
Engineering services of up to 160 hours

General Motors Corporation

Test Vehicle – 1999 GMC Sierra 1500

NYSERDA Hi-Z TECHNOLOGY, INC. DELPHI Driving Tomorrow's Technology GM

AETEG SYSTEM

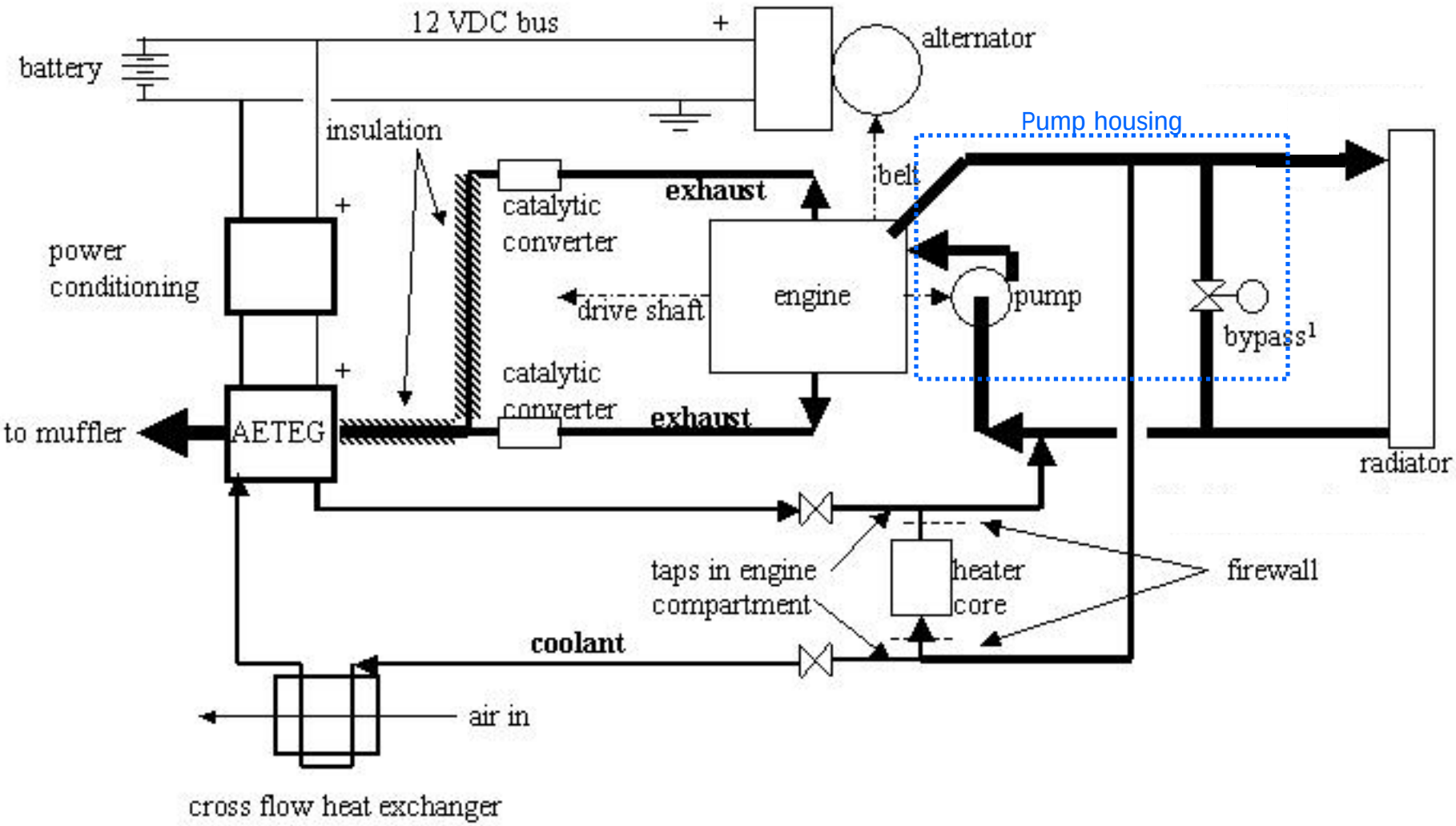
12 VDC bus
+
alternator
battery
insulation
Pump housing
belt
exhaust
catalytic
converter
+
power
conditioning
engine
pump
drive shaft
bypass1
+
catalytic
converter
exhaust
to muffler
AETEG
radiator
taps in engine
compartment
heater
core
firewall
coolant
air in
cross flow heat exchanger

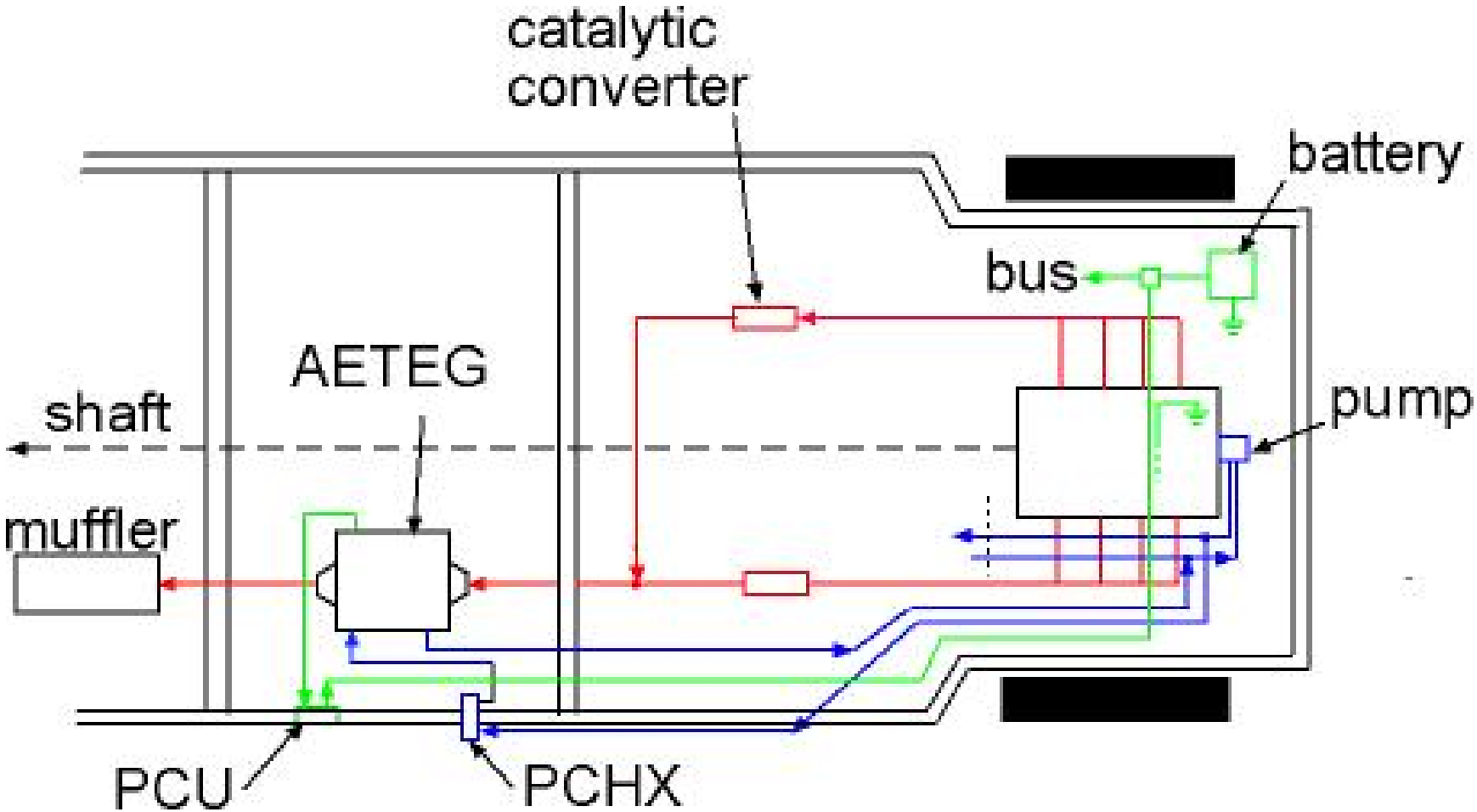
catalytic
converter
battery
bus
AETEG
shaft
pump
muffler
PCU
PCHX

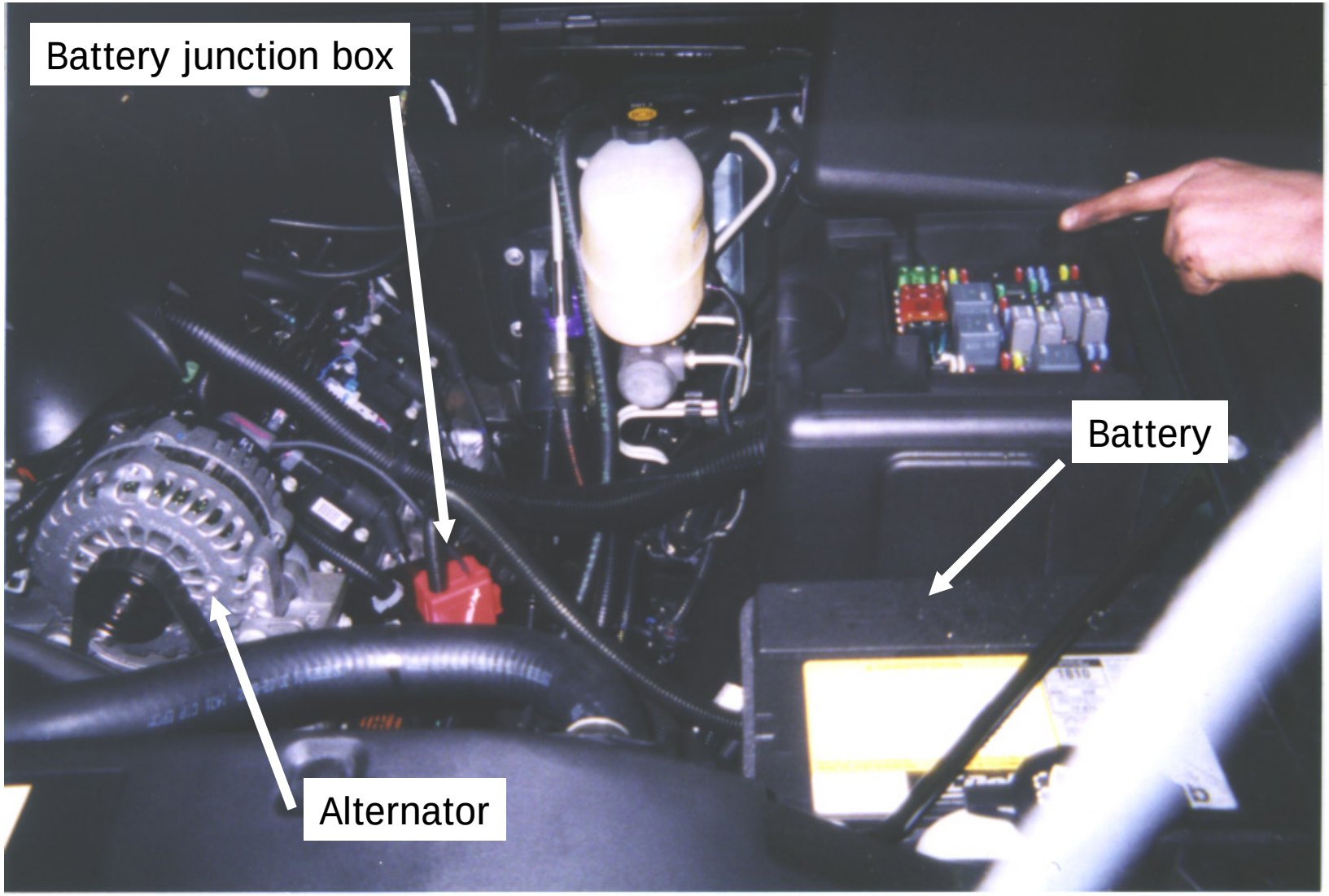
Battery junction box
Battery
Alternator

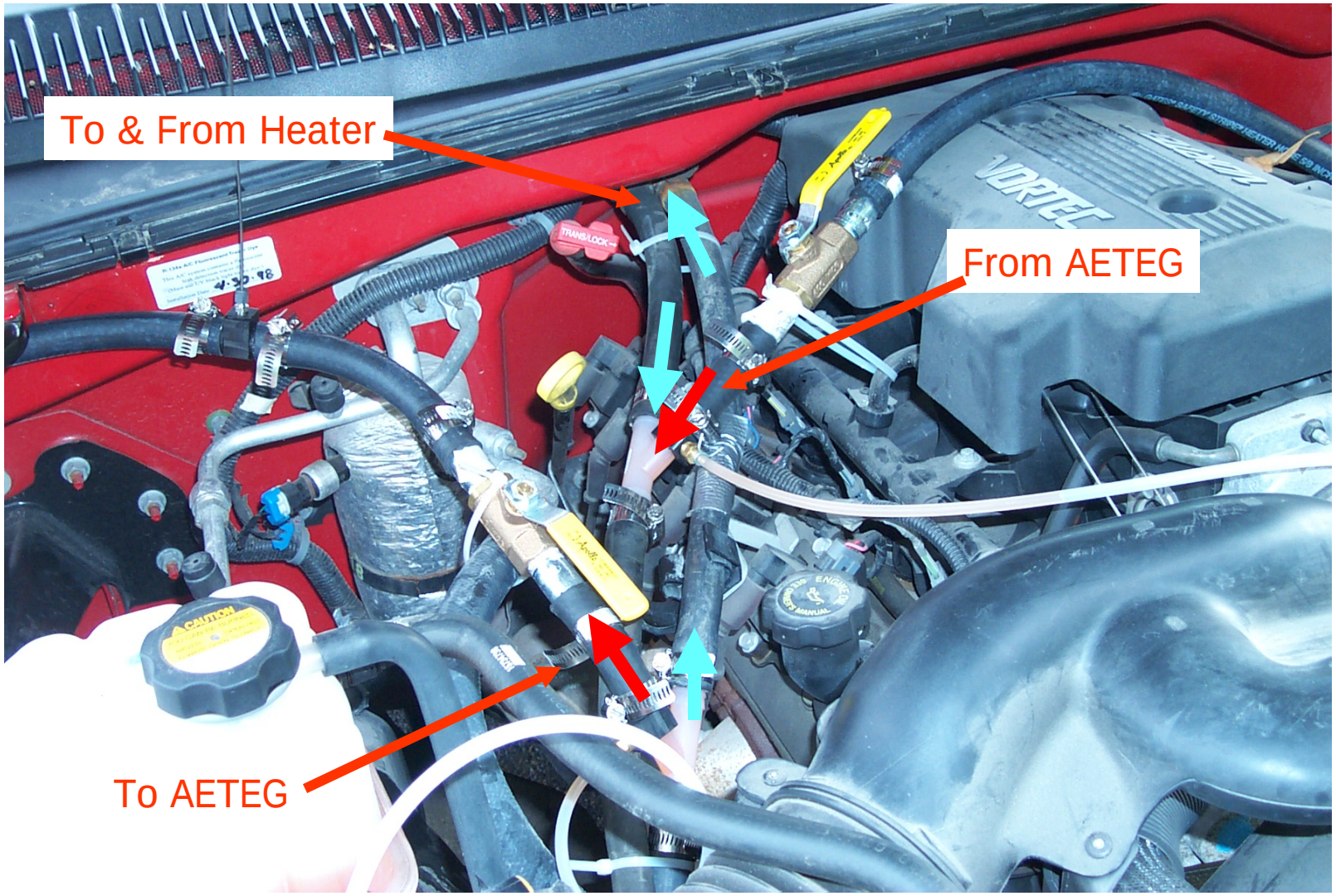
To & From Heater
From AETEG
To AETEG
VORTEC
TRANSLOCK
CAUTION

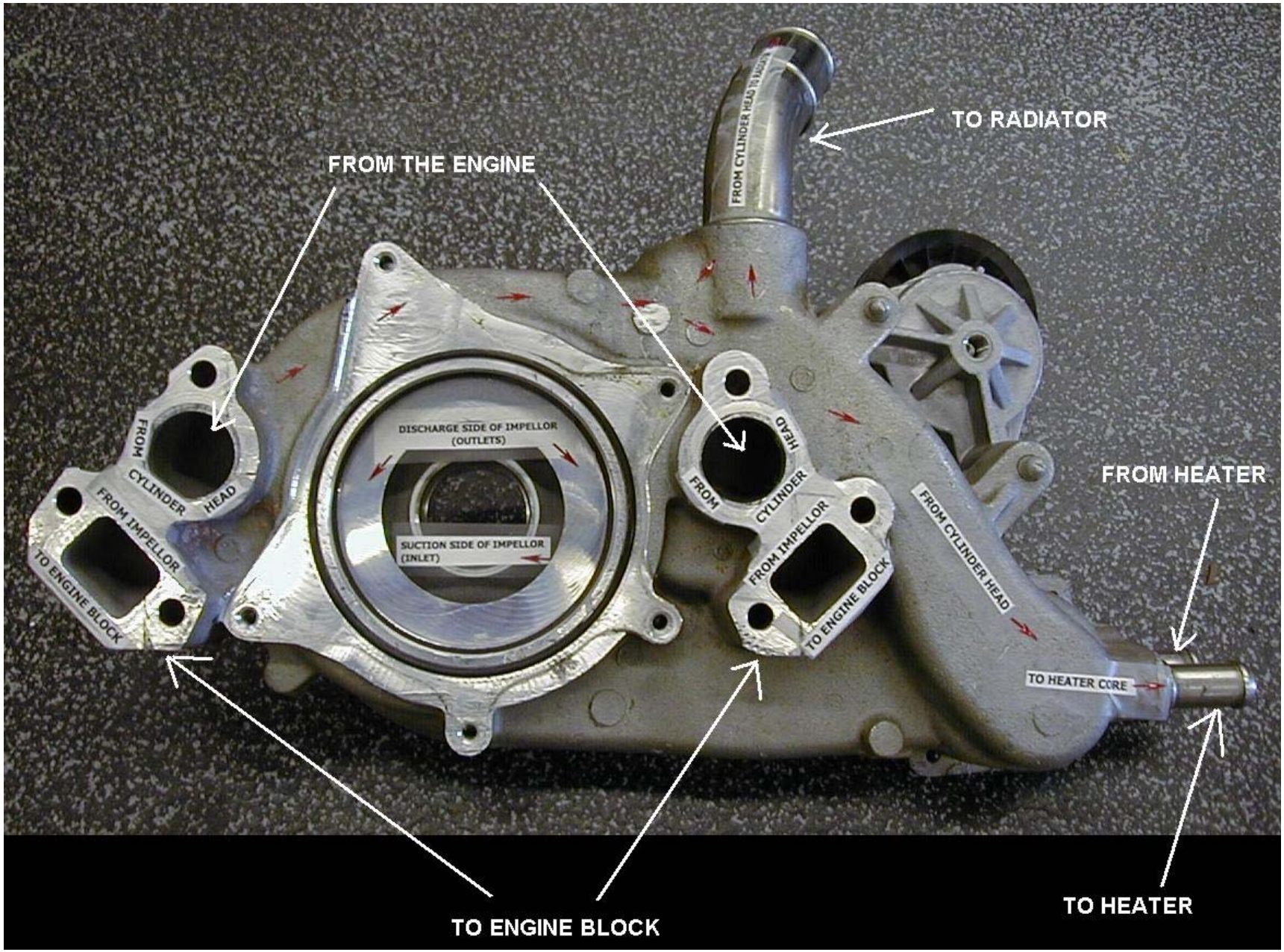
TO RADIATOR
FROM THE ENGINE
FROM CYLINDER HEAD
FROM HEATER
DISCHARGE SIDE OF IMPELLOR
(OUTLETS)
SUCTION SIDE OF IMPELLOR
(INLET)
FROM CYLINDER HEAD
FROM IMPELLOR
TO ENGINE BLOCK
FROM CYLINDER HEAD
FROM IMPELLOR
TO ENGINE BLOCK
FROM CYLINDER HEAD
TO HEATER CORE
TO ENGINE BLOCK
TO HEATER

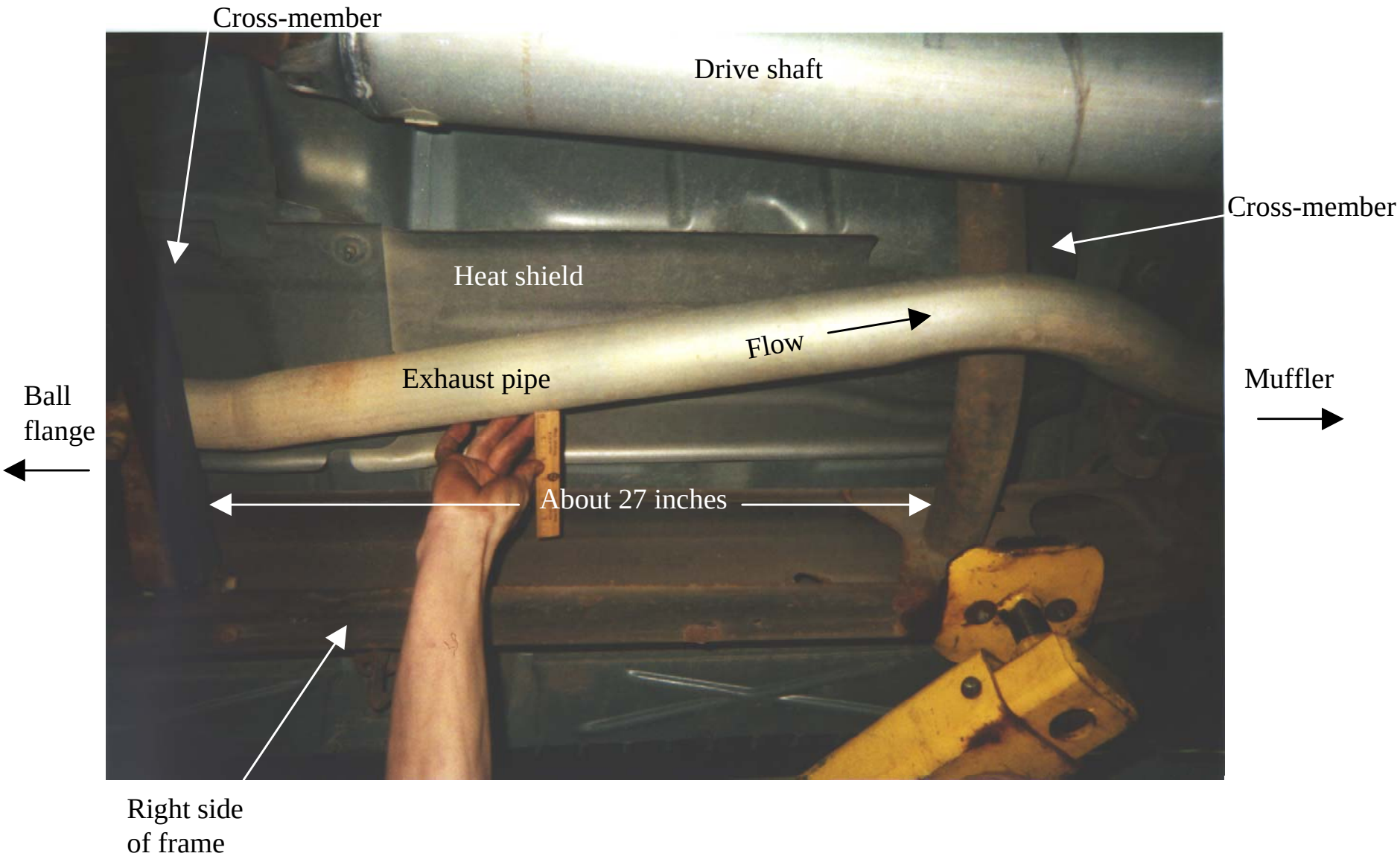
Cross-member
Drive shaft
Cross-member
Heat shield
Flow
Exhaust pipe
Ball
flange
Muffler
About 27 inches
Right side
of frame

AETEG (330 W)

Thermoelectric generator

Shown without case

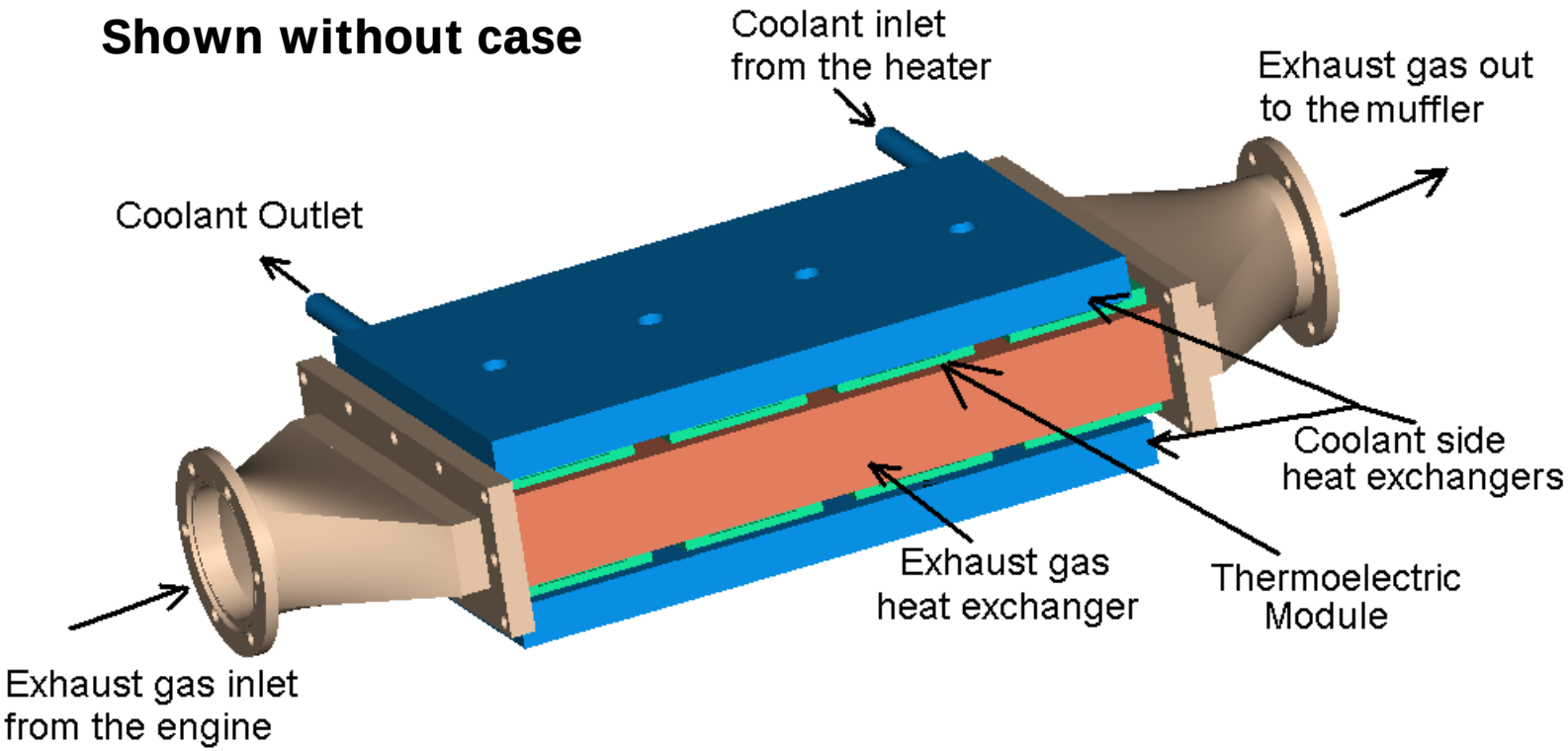

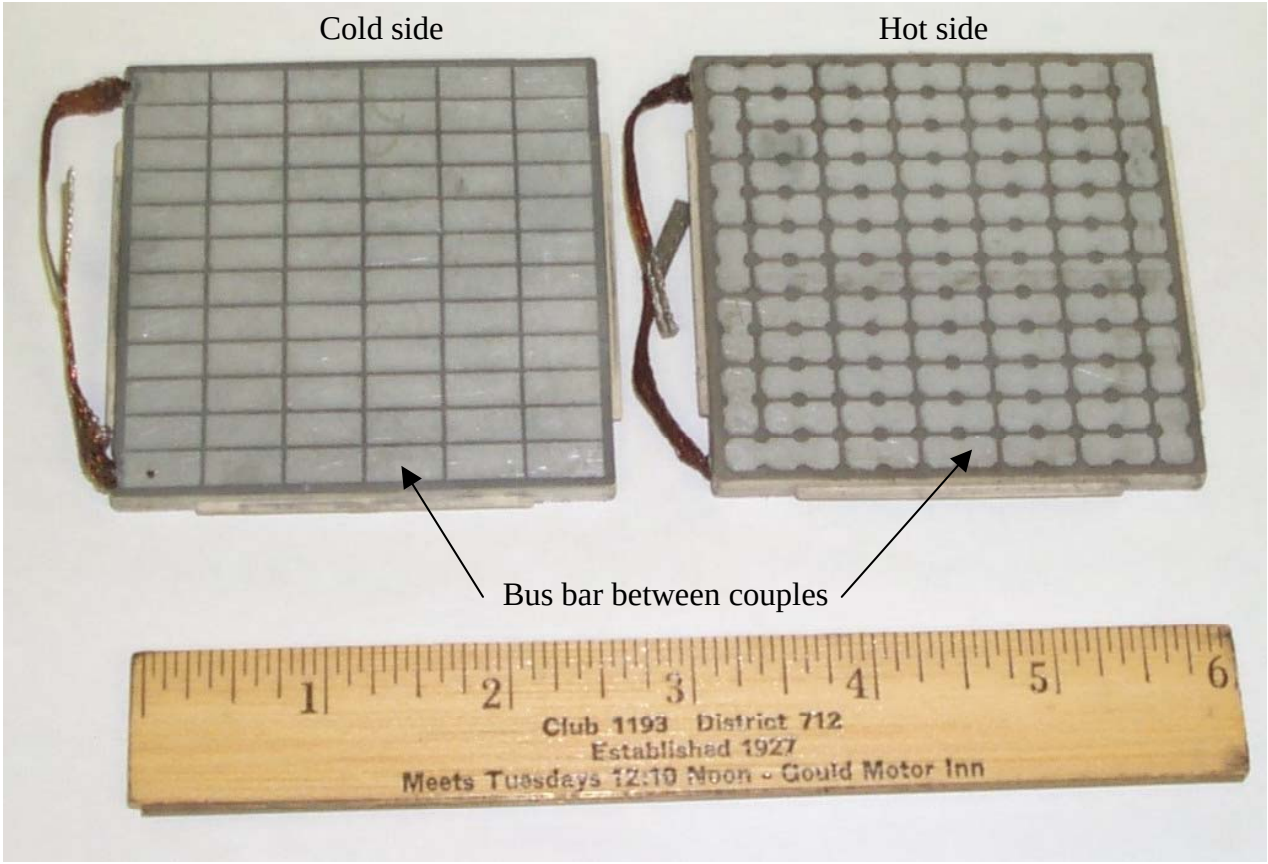

- T_h design: 230 °C; T_c design: 30 °C
- Max continuous: 250 °C; Max intermittent: 400 °C
- Power (matched load): 19 W (2.53 V & 7.5 A)
- Efficiency: 4.5%

Assembled AETEG

Dr. Alex Kushch

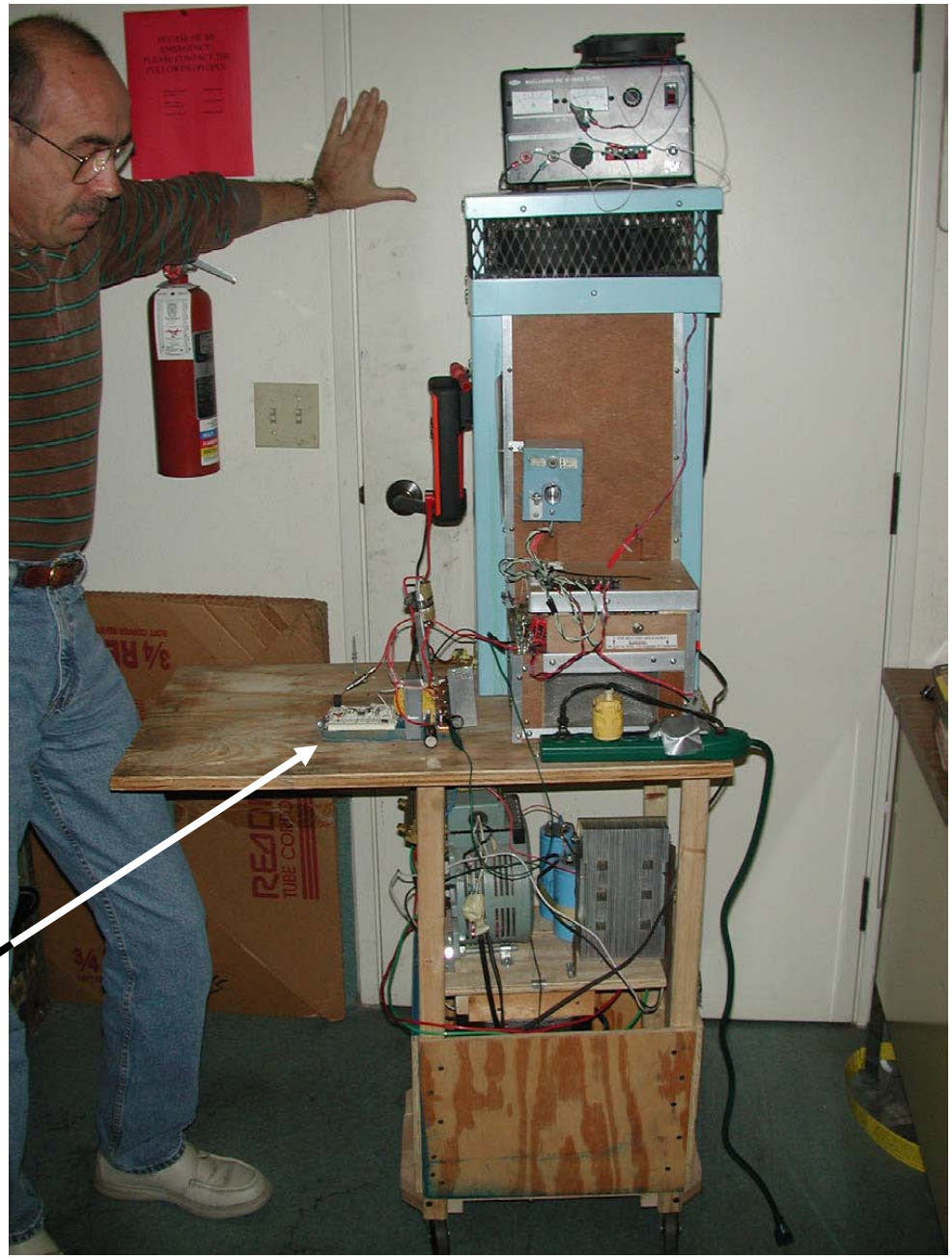

PCU breadboard

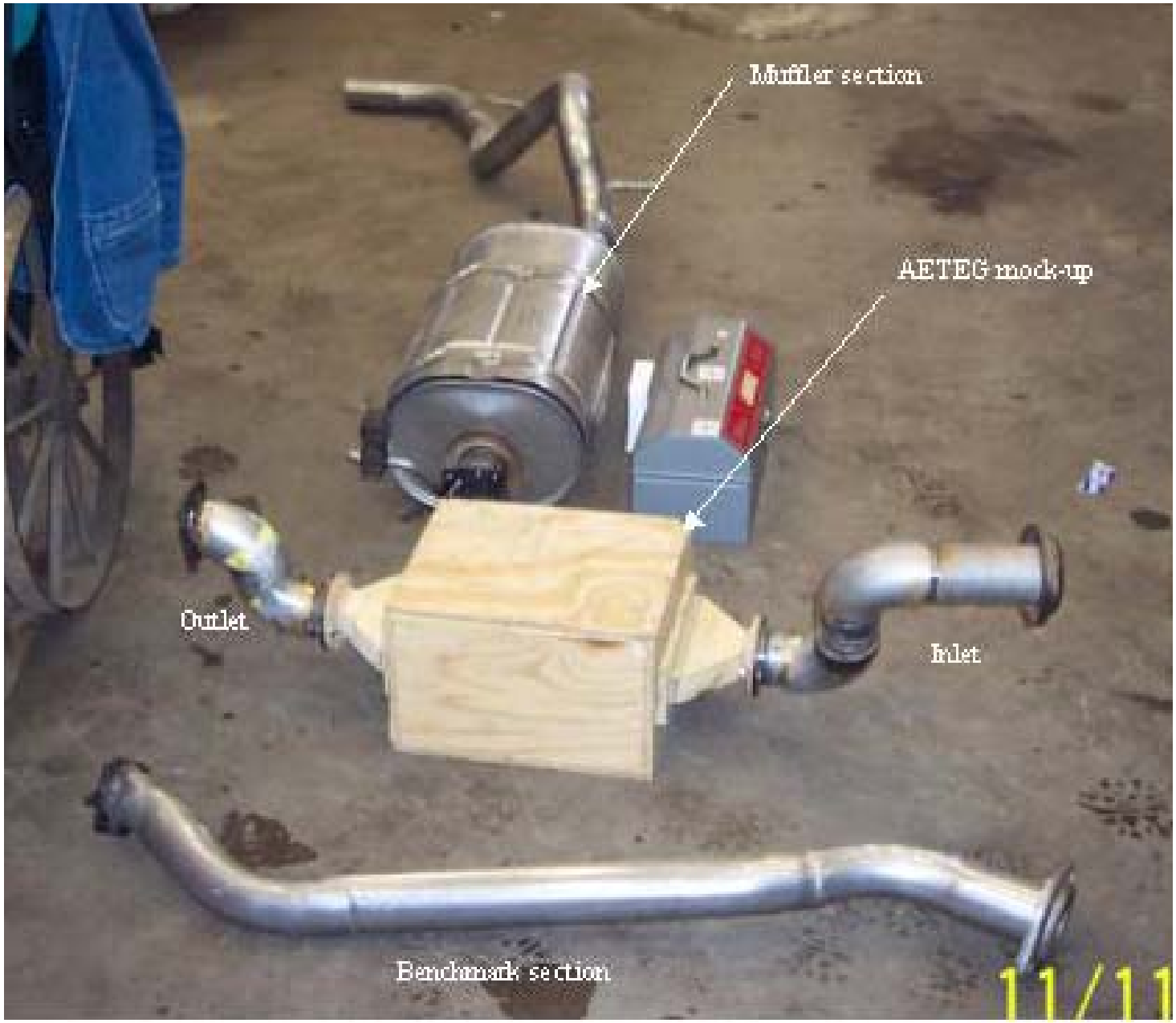
Muffler section
AETEG mock-up
Outlet
Inlet
Benchmark section
11/11

Drive shaft
Flexible pipe
Fit is better than appearance
Leroy Willard
Wendel's hoist
AETEG mock-up
Wendel Carey
11/11/2003

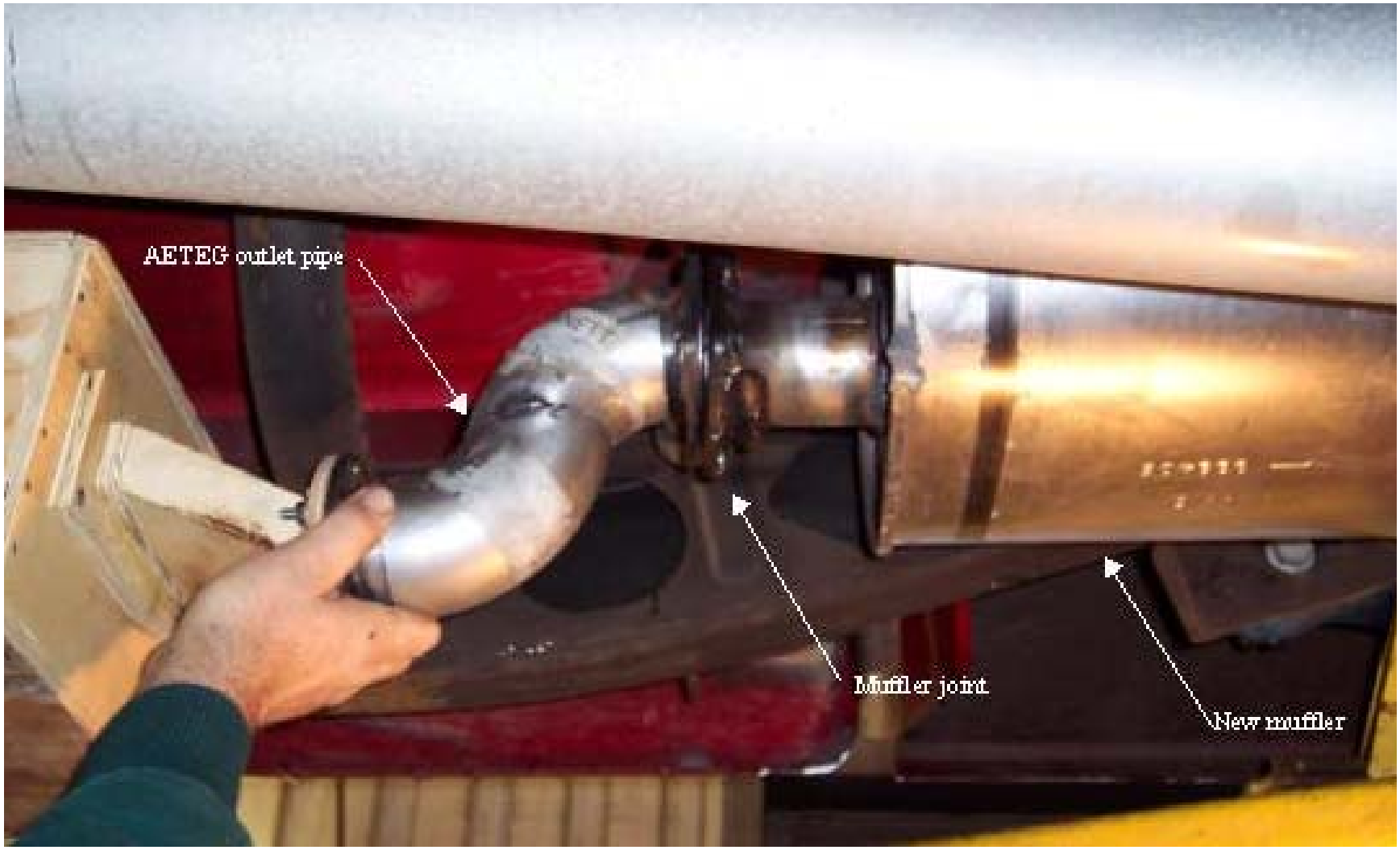
AETEG outlet pipe
Muffler joint
New muffler

SYSTEM MODEL

Tools & Components

- Tools
  - MatLab® & Simulink®
  - ADVISOR 2002, NREL's vehicle simulator
- Components
  - TEG
  - Coolant system
  - Engine and exhaust
  - Electrical bus
  - Vehicle

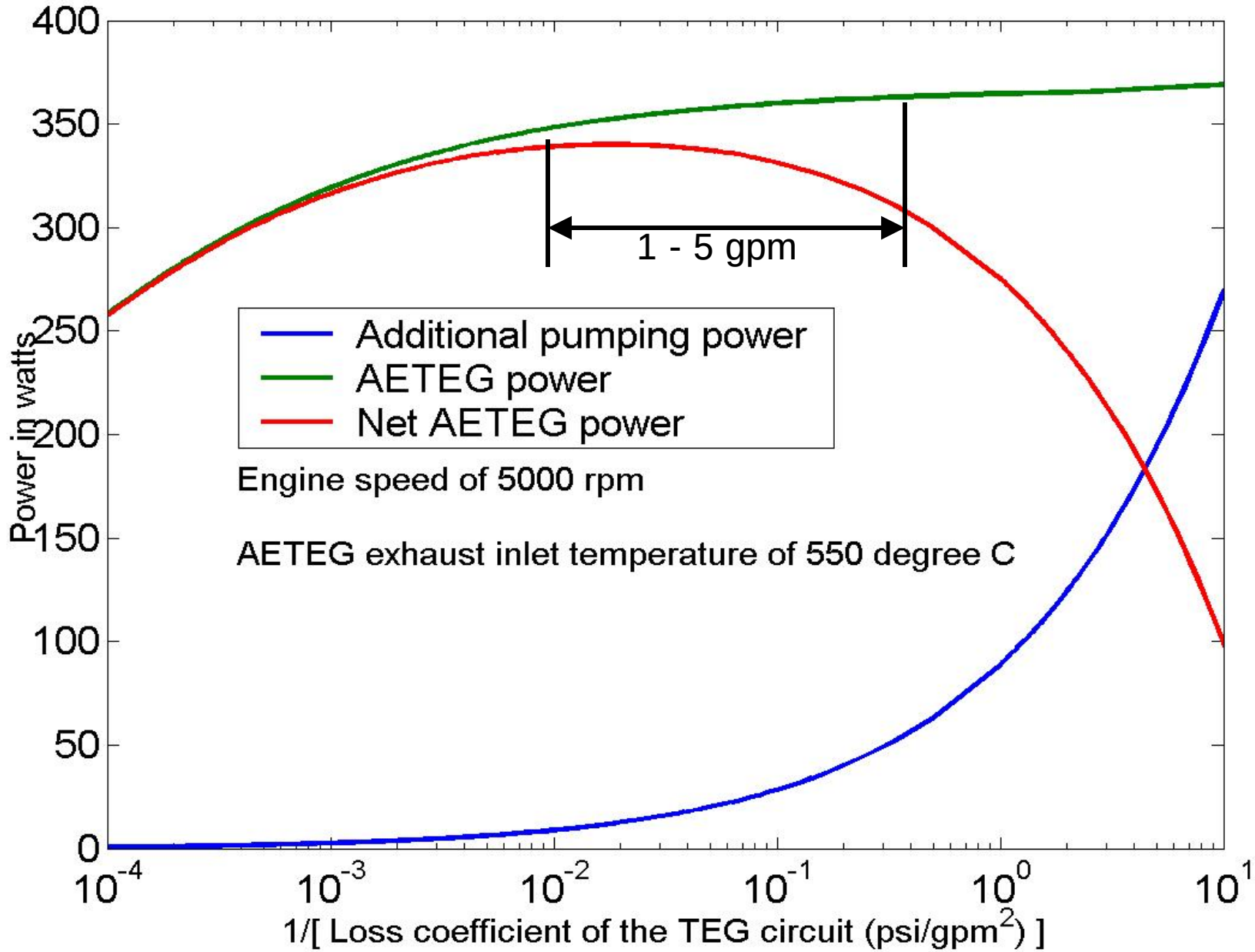
400
350
300
250
200
150
100
50
0
Power in watts
1 - 5 gpm
Additional pumping power
AETEG power
Net AETEG power
Engine speed of 5000 rpm
AETEG exhaust inlet temperature of 550 degree C
10^{-4}
10^{-3}
10^{-2}
10^{-1}
10^{0}
10^{1}
1/[Loss coefficient of the TEG circuit (psi/gpm^2)]

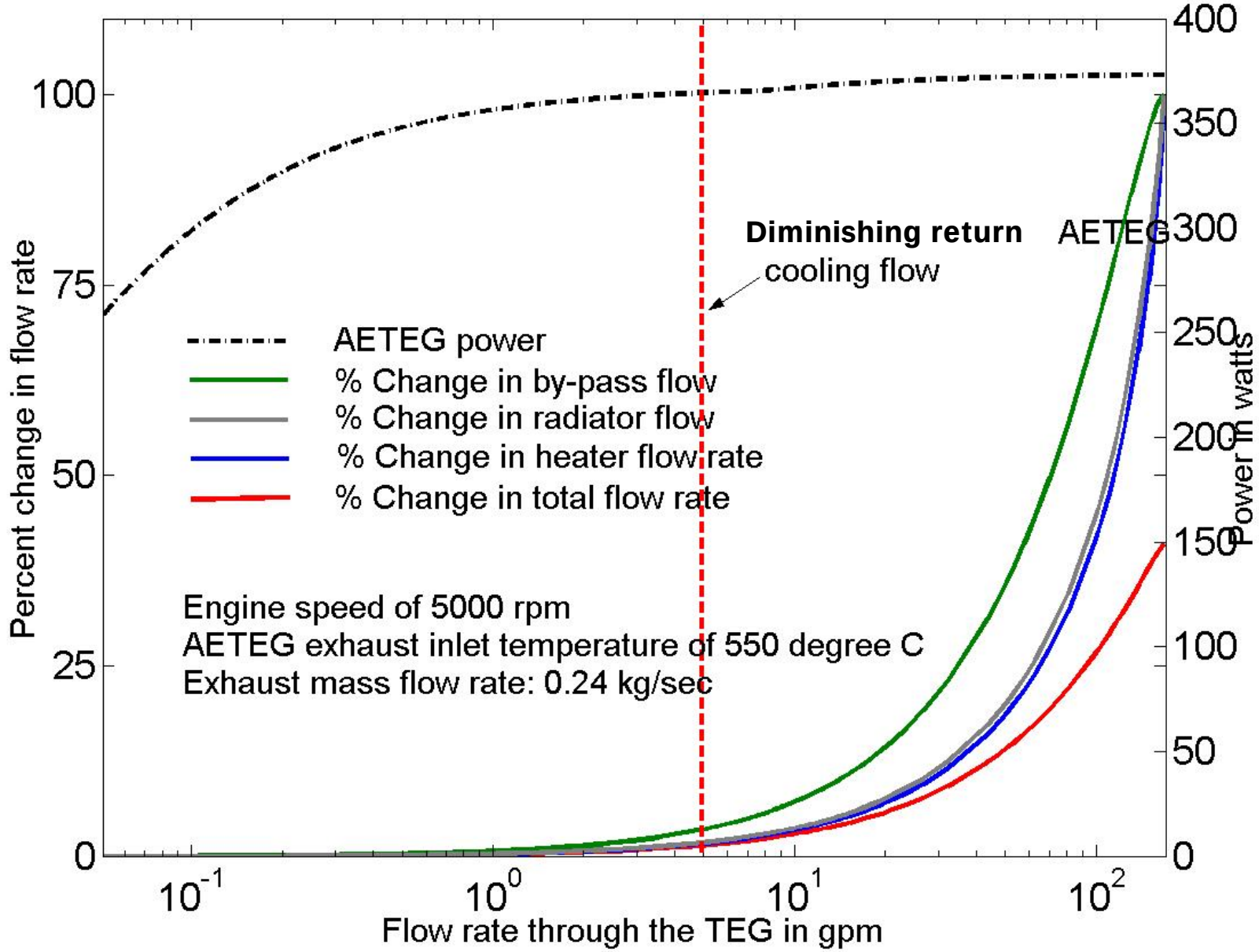
Percent change in flow rate
Power in watts
Flow rate through the TEG in gpm
Diminishing return
cooling flow
AETEG
AETEG power
% Change in by-pass flow
% Change in radiator flow
% Change in heater flow rate
% Change in total flow rate
Engine speed of 5000 rpm
AETEG exhaust inlet temperature of 550 degree C
Exhaust mass flow rate: 0.24 kg/sec
0
25
50
75
100
0
50
100
150
200
250
300
350
400
10^{-1}
10^{0}
10^{1}
10^{2}

TEST (plan in review now)

Test Truck

- 1999 Sierra 1500
- GVW: 6200 lb
- Wheel base: 143.5 in
- Length: 227.7 in
- Width: 78.5 in
- Height: 71.2 in
- Maximum power: 270 hp @ 5000 rpm
- Displacement: 5.3 L

Objectives

- Performance
- Effects on truck systems
- Effect of exhaust pipe insulation
- Effect of pre-cooling coolant
- Muffler effect
- Verify simulation
- Alternator efficiency

Test Plan

- Test at Delphi Corporation, Lockport, NY, May 10 - May 23
- Wind tunnels: dynamometers, extensive environment simulation capability
- Benchmark test with no AETEG
- Tests with AETEG

Configurations

- Benchmark: no AETEG
- AETEG: no exhaust insulation nor pre-cool
- AETEG: exhaust insulation, no pre-cool
- AETEG: exhaust insulation and pre-cool

Runs @ Configuration

- Idle, 30 mph, 50 mph, 70 mph
  - Three tunnel inlet temperatures
  - Three electrical loads
  - Perhaps different powers at each speed
- Urban driving cycle
- Highway driving cycle

Measurements

Fuel consumption

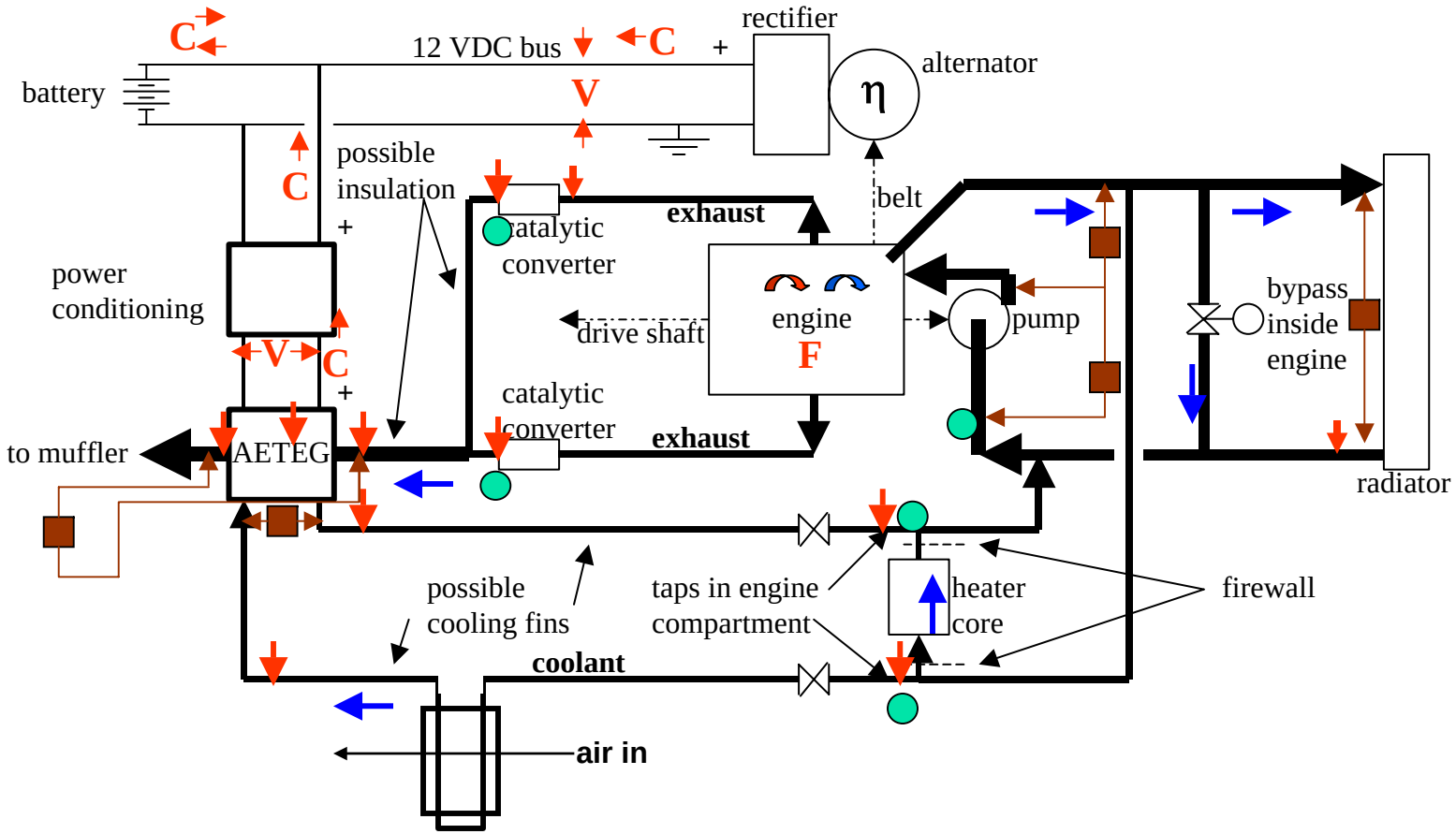

Coolant & Exhaust Temperatures

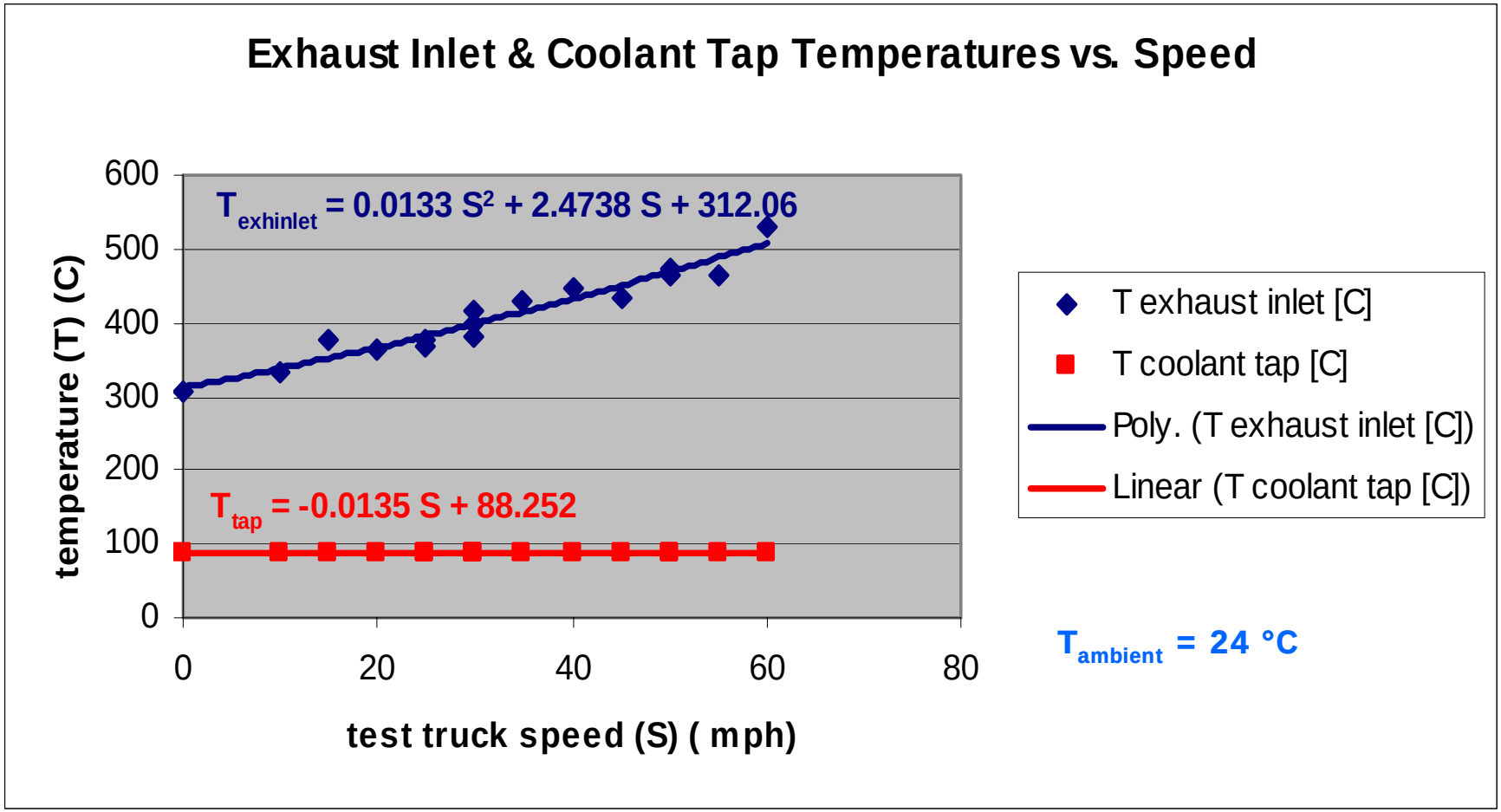

Muffler joint
Frame
Crossover joint
Benchmark section bolted in place
Tap for thermocouple compression fitting

Market Study

- Fleet vehicles: promising for after-market AETEG

Map to High-volume Production

- Tasks
  - Detailed product spec.: technical & commercial
  - Build & Test proof-of-concept unit
  - Obtain funding
  - Mfg location
  - Sourcing plan (**sufficient material & sources**?)
  - Complete production design integrating into vehicles' architecture
  - Build & test prototype units

Production...2

- Design manufacturing system
- Service plan
- Tool & equipment specifications
- Build production tools & equipment
- Pilot samples and mfg process validation
- Customer approval & start production

Production...3

- Duration: about two years
- Finance: $1.7-$2.0 million

END