Measurement of Thermoelectric Properties of Thin Films

L.C. Olsen and P.M.Martin
Pacific Northwest National Laboratory

Outline of Presentation

- Focus of Thermoelectric Materials Development
- Characterization of a Thin Film on Silicon
- Application to Boron Carbides
- Importance of Insulating Substrate and Scale Up

TE Materials Development

Major Objectives

- Investigating Scale-Up Deposition process for Si/SiGe and B_4C/B_9C Multilayer Film Structures
- Verify Properties Previously Reported for These Materials

Key Measurement Requirement

- TE Properties of Film Deposited onto Single Crystal silicon
- Development of Measurement Approach
- Application to Boron-Carbide

Possible Sample Configurations

Self Standing Film

- Relatively Straight Forward to Measure Seebeck (S), Electrical Resistivity (ρ) and in Fact ZT Directly
- Must Have Ohmic Contacts -- and of Course Self Standing Film

Film on Insulating Substrate

- Again, Relatively Straight Forward to Measure S and ρ Assuming Ohmic Contacts

Film on Substrate With S(sub) and ρ(sub)

- Must know Substrate Properties
- And Have Ohmic Contacts

Measurement Approach

Key Features

- Ohmic Contacts Applied to Film and Substrate
- Soldered Thermocouples
- Gold Plated Heater Assemblies

Assumed Model

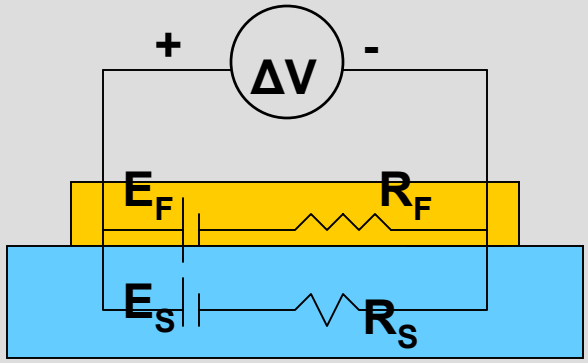

$$E_F = S_F(\Delta T)$$

$$E_S = S_S(\Delta T)$$

$$R_{MEAS} = \frac{R_F R_S}{(R_F + R_S)}$$

$$S_{MEAS} = S_F + R_F\left(\frac{S_S - S_F}{R_S + R_F}\right)$$

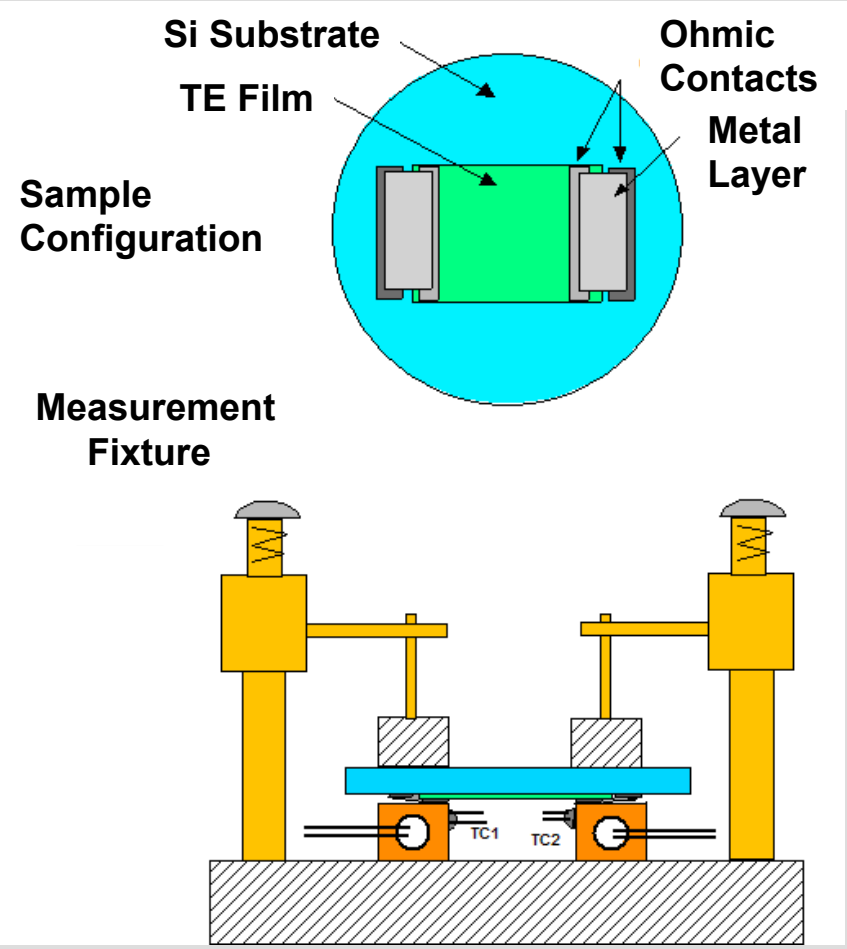

Measurement Fixture

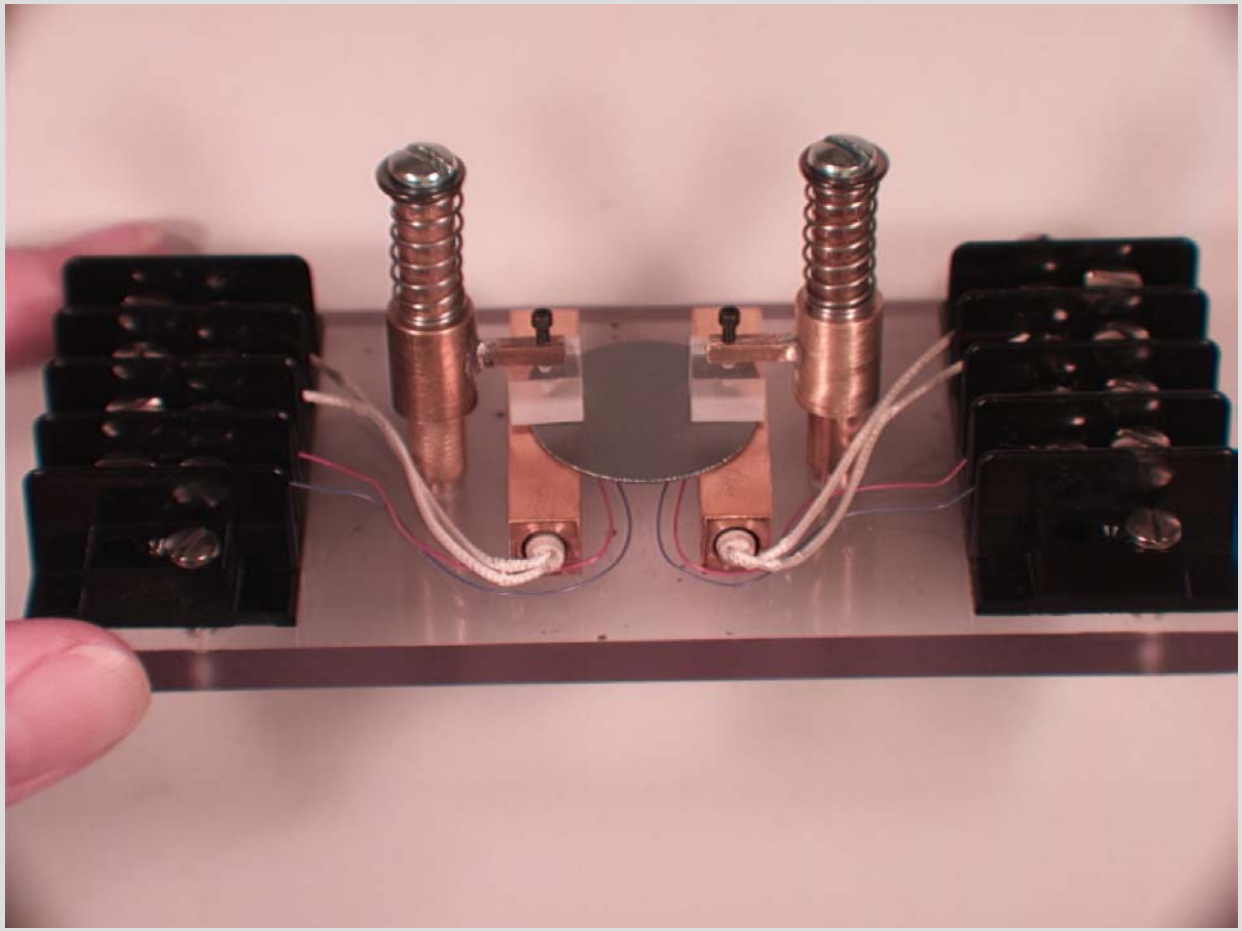

Application To P-Type Boron Carbide Films On Silicon

- Start with Three 1" P-Si Wafers Cut from a 4" Wafer
- B-C Film Deposited by RF Sputtering Onto 2 Si Substrates
- Pt Ohmic Contacts Deposited as Shown
- Pt Forms Ohmic Contacts on Both the P-Si and P-BC

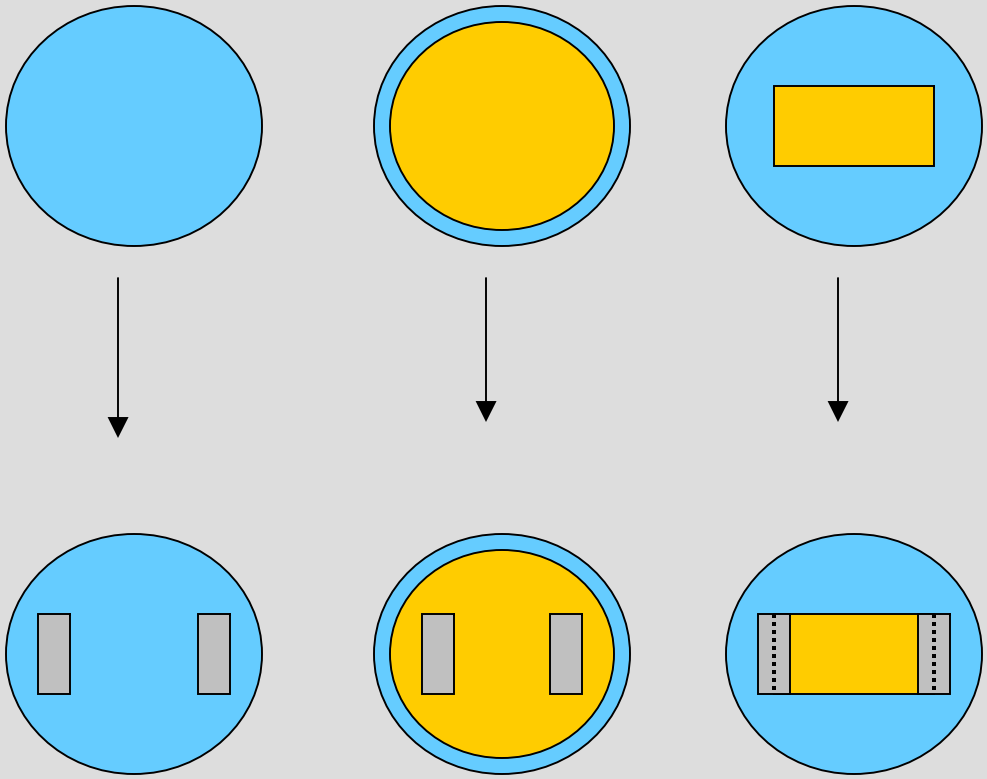

Resistance Measurements And Verifying Ohmic Contacts

Bare P-Si Wafer

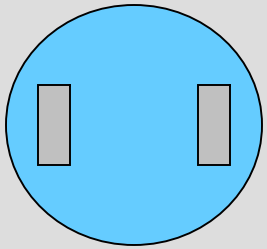

Series 1S-S

Ohmic and

R = 167 ohms

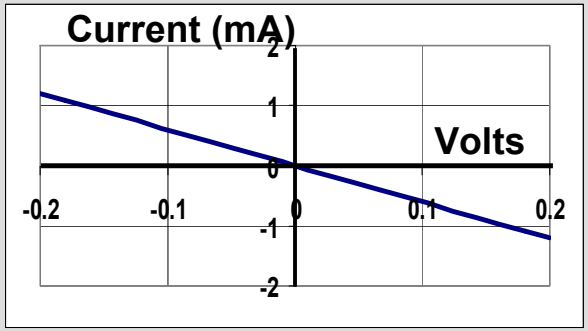

BC Film Covering Si Wafer

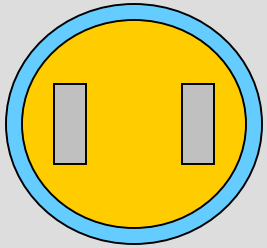

Ohmic

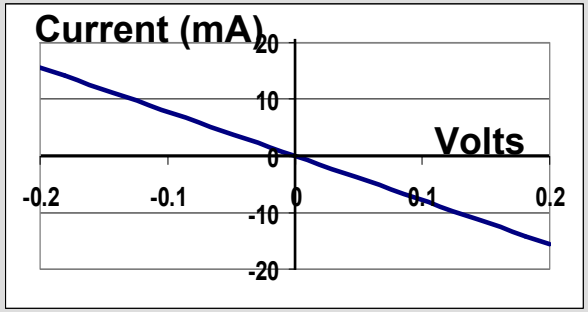

Rectangular BC Film

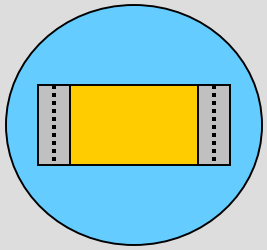

Ohmic and

R = 21.1 ohms

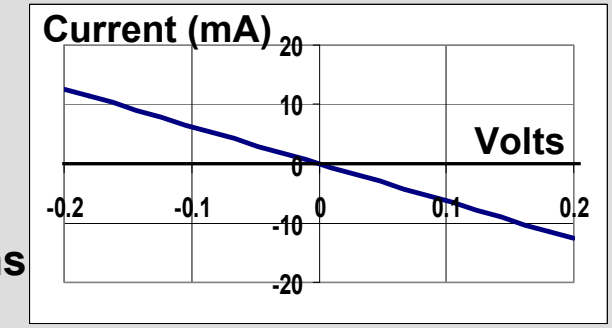

Impact of Non-Ohmic Contacts

- P-Silicon Substrates (10-20 ohm-cm)

  Non-Ohmic Contacts S = 1330 μV/ºC

  Ohmic Contacts S = 900 μV/ºC

- Boron-Carbide Film

  Non-Ohmic Contacts S = 450 μV/ºC

  Ohmic Contacts S = 300 μV/ºC

Sputter Deposition And Processing Of B-C Films

- Films Grown By RF Sputtering From B_4C and B_9C Targets
- Substrate Temperatures of 400°C to 600°C
- B_4C and B_9C Films and Multilayered Structures Studied
- Utilized Si And Ge Doping to Increase Conductivity
- Films Heat Treated @ 1000ºC to Increase Conductivity

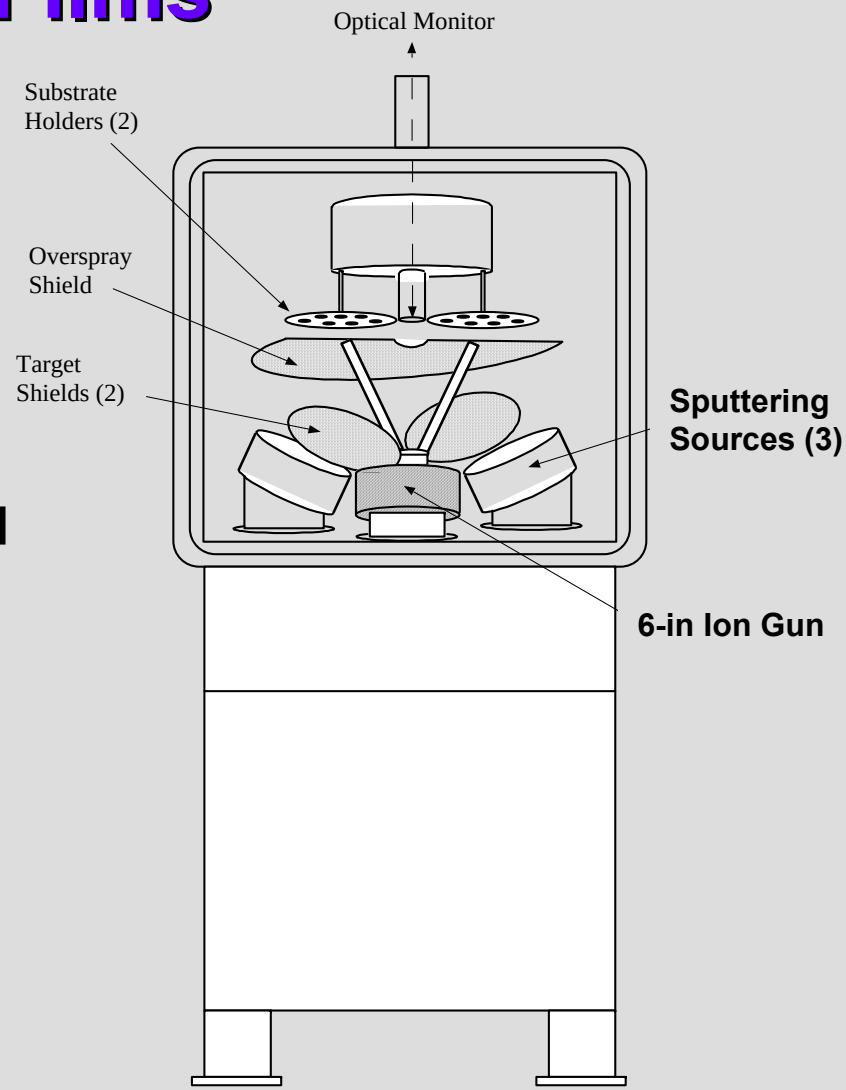

Results For B-C Films

Sample	Process	Conductivity (Ohm-cm) $^{-1}$	Seebeck Coeff (μV/°C)	Power Factor
T = 300ºK				
A	Boron @ 600°C	35	340	.0012
A	HT @ 1000°C	1660	223	.025
B	40L @ 600°C HT @ 1000°C	2560	201	.031
C	20L @ 600°C (Increased Ge)	4160	235	.070
D	Boron on Sapphire	118	170	.001

Notes

- Power Factor = $S^2\sigma T$ (W/cm/°K)
- All samples have Ge doping
- Results for B agree well with literature : Thin Solid Films 407 (2002), p. 132

Modeling Effects Of The Substrate For In-Plane Configuration

- **Assumptions:**

	S (μV/ºC)	σ(ohm-cm)	κ(W/cm/ºC)
Film	1000	1000	.05
Silicon	1000	1000	1.0
Glass	0	0	.01
Plastic	0	0	.001

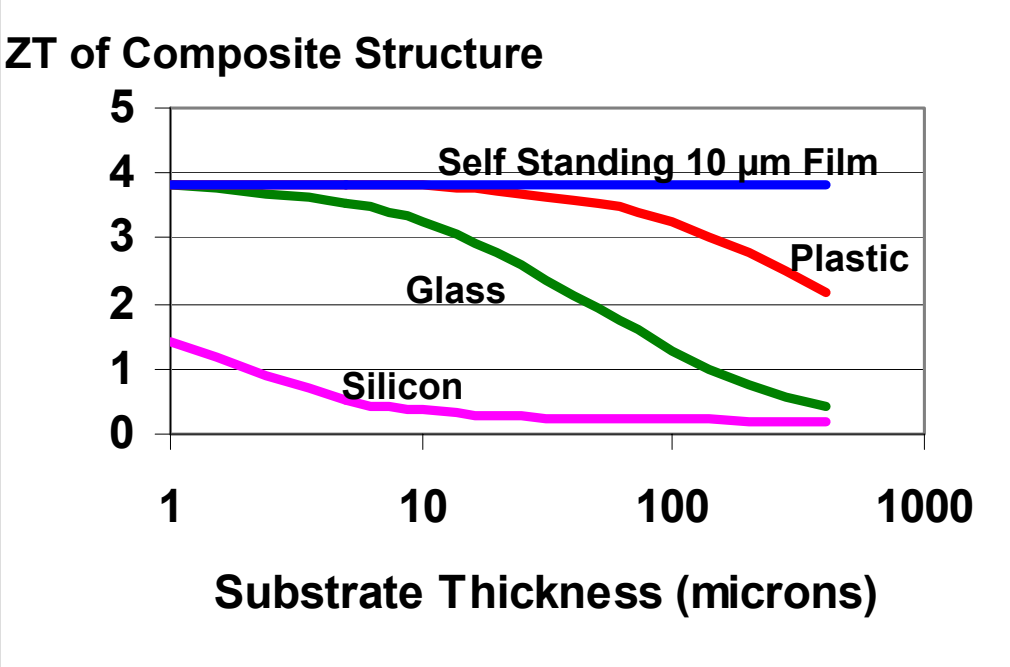

- **Applications of TE Thin Films**
  - Require Insulating Substrates
  - In-Plane and Cross-Plane Configurations

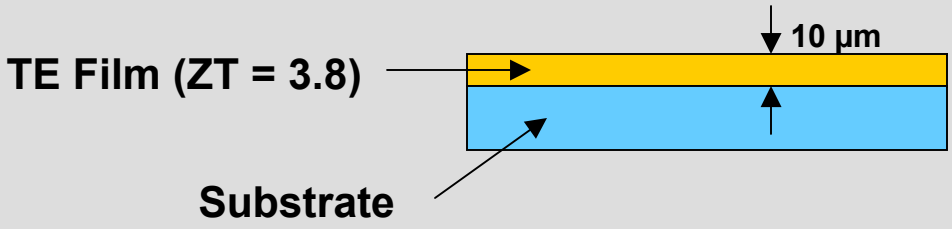

Application of Thin Film TE Materials

- Requires Insulating Substrates
- Requires Scale-Up Approach

PNNL Large 3 Meter Sputtering Chamber

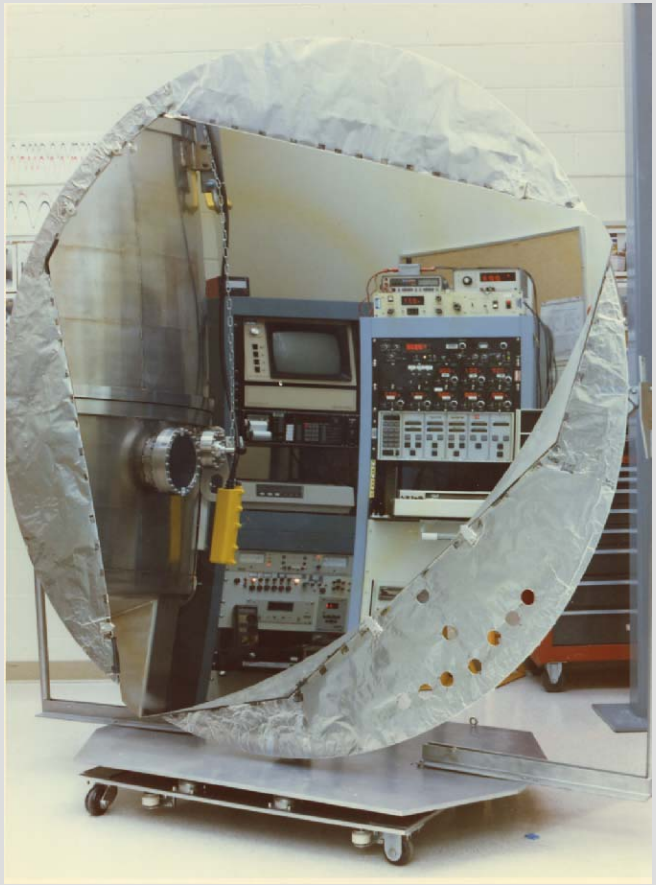

Large Laser Mirror (30 µm Thick)

Summary

- Characterization of a Thin Film Grown on a Conducting Substrate Requires Ohmic Contacts and Careful Temperature Measurement

- Have Developed Process for Depositing B_9C, B_4C and Multilayered Films That Show Promising Properties:

  20 Layer B4C/B9C(Ge) Film --- $\sigma = 4160$ $S = 235$ $S^2\sigma T = .070$

  Boron on Sapphire ---------- $\sigma = 116$ $S = 170$ $S^2\sigma T = .001$

- Modeling Presented Shows Importance of Insulating Substrates

- Scale-Up Will Require Growth of Large Area Films With Minimum Stress and Good Adhesion