Thoughts on Inhomogeneous Thermoelectrics

Terry Aselage
Long-Life Power Sources Dept. 2525
Sandia National Laboratories

David Emin
Department of Physics and Astronomy
University of New Mexico

Sandia National Laboratories

Inhomogeneous Materials – Parallel Connections

Electrical conductance $G_c >> G_i$
Thermal conductance $K_c >> K_i$
Seebeck coefficient $\alpha_i > \alpha_c$

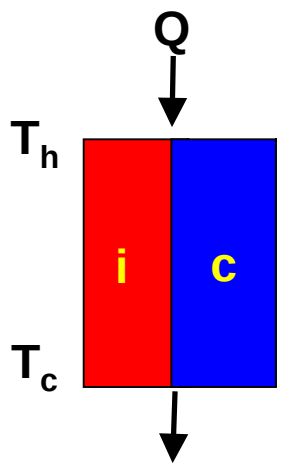

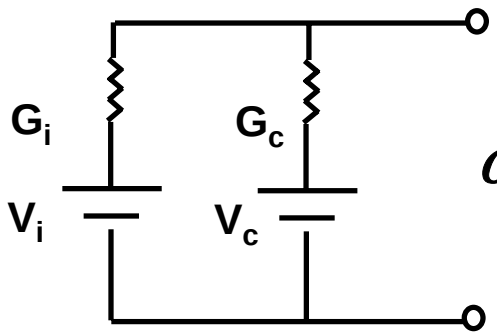

$$\alpha_{apparent} = \frac{\alpha_c G_c + \alpha_i G_i}{G_c + G_i}$$

- **Path of highest electrical conductance (short) dominates $\alpha_{apparent}$**
- **Net effect – no improvement in thermoelectric performance.**

High apparent conductance possible, but coupled with Low apparent Seebeck coefficient

Sandia National Laboratories

Inhomogeneous Materials – Series Connections

Electrical conductance $G_c >> G_i$
Thermal conductance $K_c >> K_i$
Seebeck coefficient $\alpha_i > \alpha_c$

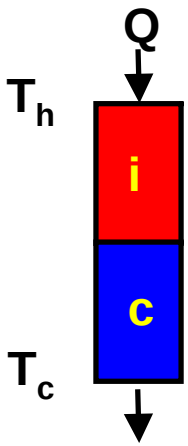

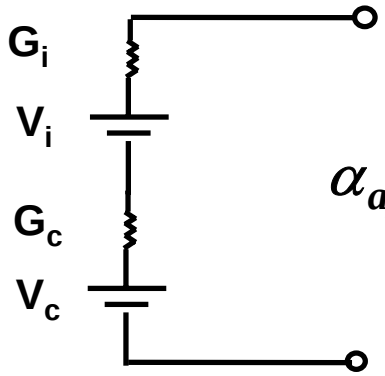

$$\alpha_{apparent} = \frac{\alpha_i \left(1/K_i \right) + \alpha_c \left(1/K_c \right)}{\left(1/K_i \right) + \left(1/K_c \right)}$$

- **Regions of lowest thermal conductance (large ΔT) dominate $\alpha_{apparent}$**

Net Effect – no improvement in thermoelectric performance.
Highest $ZT_{series} \leq ZT$ of best individual material

Sandia National Laboratories

Case 1: Ag Particles Dispersed in Polythiophene*

Step 1)
- 8 μm aggregates of 20 nm Ag particles, 0, 5, and 10 vol. % in
- RPOT (Regioregular poly (3-octylthiophene-2,5-diyl))
- Dispersed/dissolved in chloroform
- Cast onto glass slides
- Solvent evaporation → 100 to 300 μm, homogeneous (by TEM) films

Step 2)
- Stacks of films from Step 1) layered to produce
- Test samples 2 to 4 mm thick by 4 cm length
- 1 to 4 vol.% samples by mixing 0 and 5 vol.% films

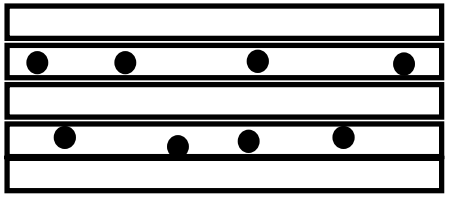

- Stacks then "Melted/mixed/annealed" (190 to 200°C)
- Materials' homogeneity not characterized post-processing

*: "Composite Thermoelectric Materials",
US Patent 5,973,050, Oct. 26, 1999,
G. H. Johnson and R. A. Martin

Sandia National Laboratories

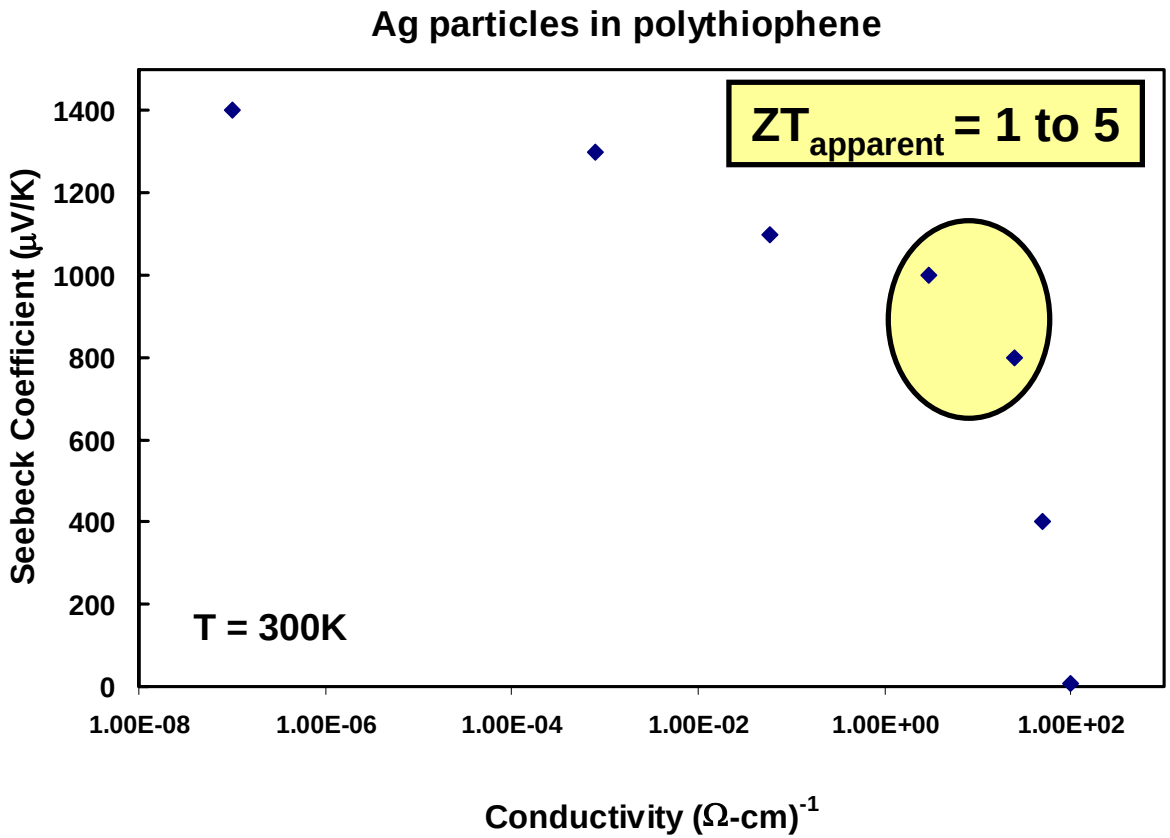

- **Simultaneous high Seebeck coefficient and conductivity are inconsistent with simple circuit models.**
- **Is the result artifactual?**
  Different heat and electrical current paths during α, σ measurement?

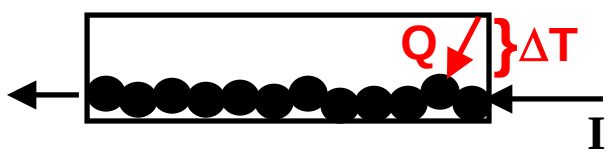

- **Is there another (useful) explanation?**

Sandia National Laboratories

Case 2 Background: Boron Carbides

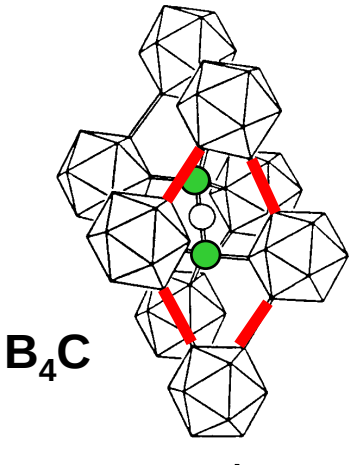

- Based on twelve-atom, boron-rich icosahedra
- Very wide single-phase region: 9 to 19 atomic percent C
- Substitutional solid solution:
  $(B_{11}C)$ { [CBC] → [CBB] → [BBB] }
- "B_4C" = carbon-rich end member of solid solution (19a/o)
- "B_9C" = solid solution member with 10 percent C
- B for C substitution results in high densities of holes (0.1 to 1 per site)

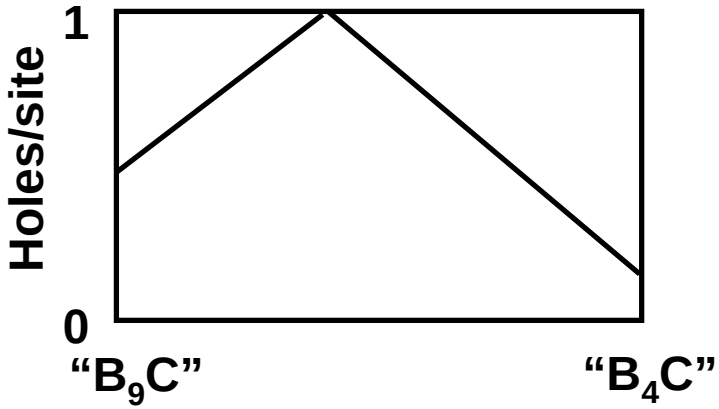

- ***Holes localize on icosahedra*** (diameter ≈ 3Å), move by hopping.
- ***Quantum well description is inappropriate.***

Sandia National Laboratories

Case 2: Boron – Carbon Films on Si*

- Composition-modulated (B_4C/B_9C) films deposited by sputter or MBE
- On Si substrates (only?)
- "Low" as-deposited conductivity, but much greater than literature: $\approx 10^{-8}$ Ω-cm
- Anneal 1050°C, 24 hours → dramatic increase in conductivity
- Materials' homogeneity (crystallinity?) not characterized post-anneal

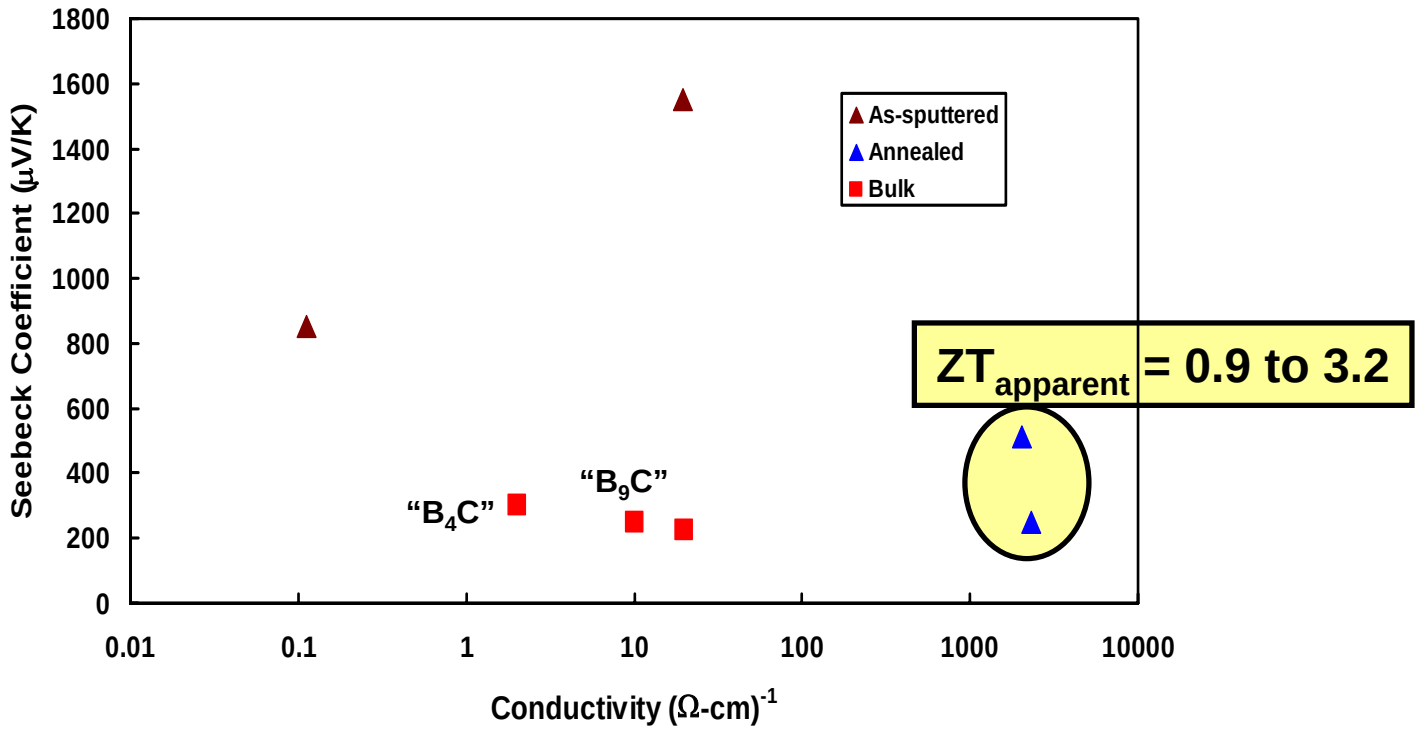

*: Thermoelectric Performance of B_4C/B_9C Heterostructures", 15th ICT Proceedings, 1996
S. Ghamaty et al.

Sandia National Laboratories

Effect of Inhomogeneity in B-C films?

- Prolonged high-temperature anneals can promote inhomogeneities:

  Interfacial reactions & Diffusion of B into Si and Si into B_xC.

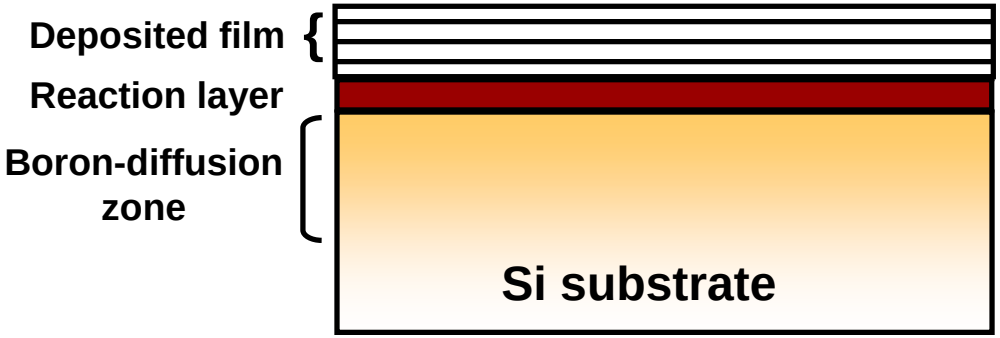

(30 min. CVD at 1350°C)

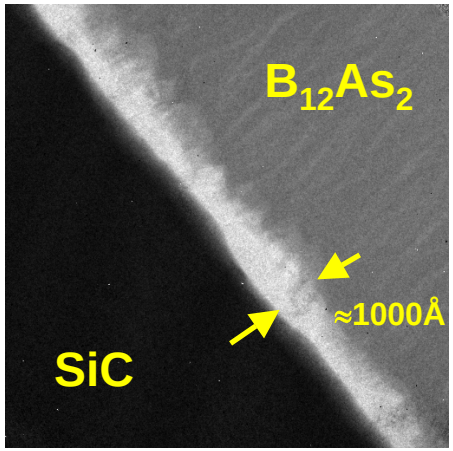

Energy-filtered TEM highlights B_4C reaction layer. Si diffuses into $B_{12}As_2$.

- Parallel conduction paths:

  B_xC film with Si impurity
  Interfacial reaction layer
  Heavily B-doped Si layer

- Simultaneous high Seebeck coefficient and conductivity inconsistent with simple parallel circuit analysis.

- How to understand these measurements?

Sandia National Laboratories

Concluding Thoughts

- Two very dissimilar material systems have unexpectedly high apparent ZT.
  - Ag clusters in polythiophene
  - B-C films on Si
- Both systems have anomalously high power factor from high conductivity.
- Enhancement of power factors appear unrelated to quantum confinement.
- Simple circuit analyses of inhomogeneities fail to explain large power factors.
- Very large ZT, if real, are technologically and scientifically significant.
- Effort should be made to better understand these effects.
  - Better characterization of materials and their inhomogeneities.
  - Careful transport measurement to probe effect of inhomogeneity.