CONF-940602--23-Rev.1

UCRL-JC-117397 Rev 1
PREPRINT

The National Ignition Facility Project

J. A. Paisner
E. M. Campbell
W. J. Hogan

This paper was prepared for submittal to the
American Nuclear Society 11th Annual Meeting
on the Technology of Fusion Energy
New Orleans, LA
June 19–23, 1994

RECEIVED
JUL 18 1995
OSTI

June 16, 1994

Lawrence Livermore National Laboratory

This is a preprint of a paper intended for publication in a journal or proceedings. Since changes may be made before publication, this preprint is made available with the understanding that it will not be cited or reproduced without the permission of the author.

DISTRIBUTION OF THIS DOCUMENT IS UNLIMITED

DISCLAIMER

This document was prepared as an account of work sponsored by an agency of the United States Government. Neither the United States Government nor the University of California nor any of their employees, makes any warranty, express or implied, or assumes any legal liability or responsibility for the accuracy, completeness, or usefulness of any information, apparatus, product, or process disclosed, or represents that its use would not infringe privately owned rights. Reference herein to any specific commercial product, process, or service by trade name, trademark, manufacturer, or otherwise, does not necessarily constitute or imply its endorsement, recommendation, or favoring by the United States Government or the University of California. The views and opinions of authors expressed herein do not necessarily state or reflect those of the United States Government or the University of California, and shall not be used for advertising or product endorsement purposes.

DISCLAIMER

Portions of this document may be illegible in electronic image products. Images are produced from the best available original document.

THE NATIONAL IGNITION FACILITY PROJECT

J. A. Paisner
Lawrence Livermore
National Laboratory
P. O. Box 808; L-490
Livermore, CA 94550
(510)422-6211

E. M. Campbell
Lawrence Livermore
National Laboratory
P. O. Box 808; L-488
Livermore, CA 94550
(510)422-5391

W. J. Hogan
Lawrence Livermore
National Laboratory
P. O. Box 808; L-481
Livermore, CA 94550
(510)422-1344

ABSTRACT

The mission of the National Ignition Facility is to achieve ignition and gain in inertial confinement fusion targets in the laboratory. The facility will be used for defense applications such as weapons physics and weapons effects testing, and for civilian applications such as fusion energy development and fundamental studies of matter at high temperatures and densities. This paper reviews the design, schedule, and costs associated with the construction project.

I. INTRODUCTION

A Conceptual Design Report (CDR) for the National Ignition Facility (NIF) was commissioned by the U.S. Secretary of Energy in January 1993 as part of a Key Decision Zero, Justification of Mission Need. Motivated by the progress to date by the Inertial Confinement Fusion (ICF) Program in meeting the Nova Technical Contract[1] goals established by the National Academy of Sciences in 1989, the Secretary requested a design using a solid-state laser driver operating at the third harmonic (0.35 μm) of neodymium glass. A Memorandum of Agreement between the participating ICF laboratories was signed in August 1993 and a Project organization was established, including a technical team from the Lawrence Livermore National Laboratory, Los Alamos National Laboratory, Sandia National Laboratory, and the Laboratory for Laser Energetics at the University of Rochester. A detailed multi-volume CDR[2] has recently been completed by this multi-laboratory team and submitted for review as part of the Department of Energy's Key Decision One, Project Authorization. The facility design is shown in Figure 1. The mission of the NIF is to produce ignition and modest energy gain in ICF targets in support of national security and civilian applications. For national security, the NIF will be one of the cornerstones of the DOE's science- and technology-based Stockpile Stewardship Program and, for civilian applications, will provide critical data on inertial fusion ignition systems.

An overview of the NIF Project is presented in this paper. Other papers in this conference provide more detail on ICF target physics and on key subsystems under consideration for the NIF.

II. NIF DESIGN CRITERIA

The identified laser power and energy operating regimes for indirect-drive fusion ignition targets is displayed in Figure 2. Each point on the operating map corresponds to a different temporal pulse shape, typically one with a relatively long foot-pulse (10–20 ns), followed by a short peak-pulse (2–8 ns) having a high contrast ratio (25–100). In the high-power, short temporal-pulse region, performance is limited by laser-plasma instabilities, while in the low-power, long temporal-pulse region, performance is limited by hydrodynamic instabilities. The baseline target, shown in Figure 3, requires a laser system that routinely delivers 500 TW/1.8 MJ at 0.35 μm in a 50:1 contrast ratio pulse through a 500-μm spot at the laser entrance hole of the target hohlraum with a positioning accuracy of 50 μm. Each beam must achieve a power balance of approximately 8% rms (over any 2-ns interval) with respect to a reference value. As illustrated in Figure 3, symmetrical implosion of the capsule requires two-sided target irradiation with two cones per side; each having an outer cone to inner cone laser power ratio of two to one, and at least eight-fold azimuthal irradiation symmetry. The cone angles, nominally at 53° (outer) and 27° (inner), and laser power ratio are chosen to maintain time-dependent symmetry of the x-ray drive seen by the imploding capsule. To avoid

MASTER
DISTRIBUTION OF THIS DOCUMENT IS UNLIMITED

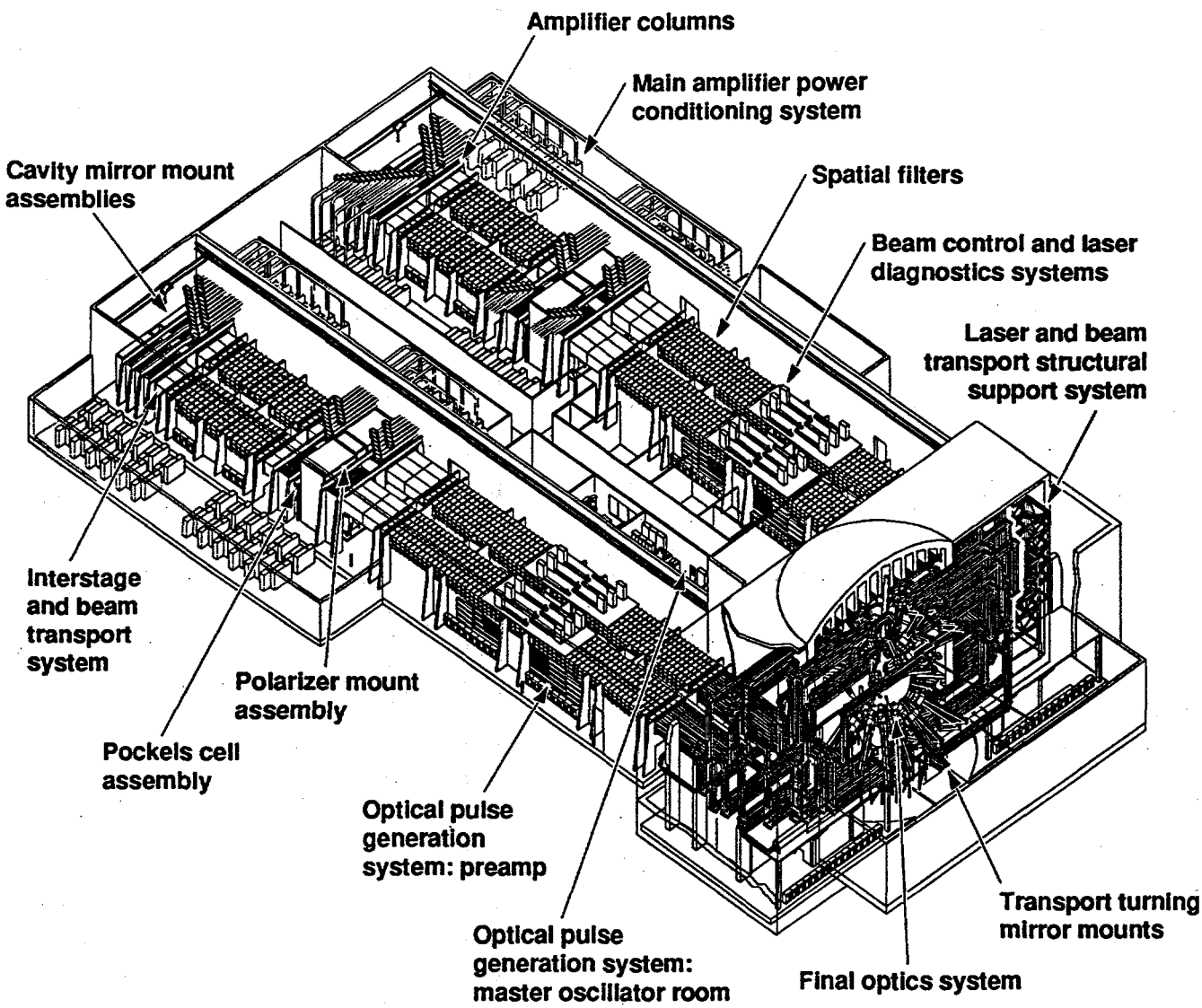

Figure 1. The National Ignition Facility overview. The NIF will be a low hazard, non nuclear facility.

laser-plasma instabilities, such as filamentation and stimulated scattering, the baseline indirect-drive target hohlraum requires laser spatial beam smoothing using phase plates, and laser temporal smoothing using a combination of four beams at different center wavelengths, each separated by 3.3 Å (3.3×10^{-4} μm). This separation was set by the requirement on the motion of the kinoform-induced speckle pattern at the target focus. As a consequence of these design rules, the laser system must deliver at least 192 beams to the target chamber. A laser system designed to meet these criteria has a safety margin of approximately two for achieving ignition, as indicated in Figure 2. It is important to note that these laser system requirements, optimized for indirect-drive ignition targets, are consistent with those proposed for direct-drive ignition targets.

The primary criteria for the NIF systems given in Table 1 represent a small subset of the functional requirements for the facility, which include other mission-related and lifecycle requirements for the laser, experimental area, radiation confinement systems, building and structural systems, safety systems, environmental protection systems, and safeguard and security systems. The NIF was

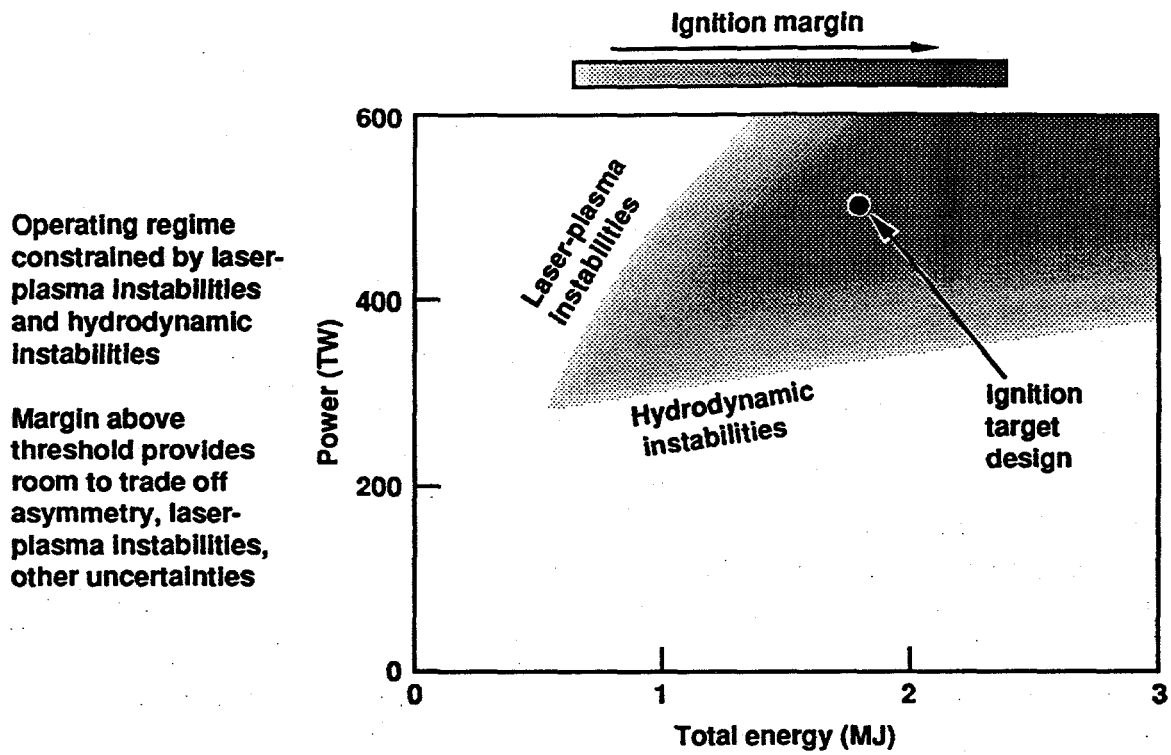

50-05-0494-1803pb01

Figure 2. The indirect-drive target ignition regime in laser power-energy space at 0.35 μm. Each point on the plane corresponds to a unique two-step temporal pulse. The baseline design at 500 TW/1.8 MJ has approximately a factor of 2 safety margin.

- **Generic NIF ignition target**

"Outer cones" enter at 57 and 48 degrees
500 μm best focus at entrance hole, F/8
"Inner cones" enter at 23 and 32 degrees
500 μm best focus ~3mm inside hohlraum, F/8

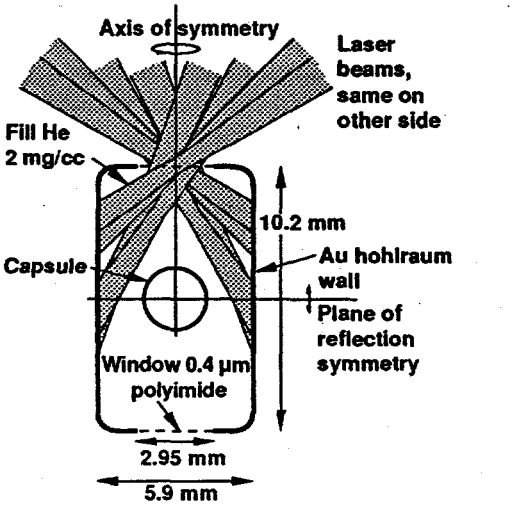

40-00-0294-0596Apub

- **Minimum number of beamlets is 192**

Symmetry	Beam multiplier	
Time dependent hydrodynamics	3	Outer cone at ~53° at 2x energy/power Inner cone at ~27° at 1x energy/power
Axial symmetry	≥8	
Reflection symmetry	2	
Beam smoothing	4	Smoothing by multiple apertures/ colors
	≥192 (or 192, 216, 240,...) beams	

Figure 3. Minimum number of beams delivered to ignition target is determined by implosion symmetry requirements.

Table 1. Primary criteria for the National Ignition Facility.

Laser pulse energy	1.8 MJ
Laser pulse peak power	500 TW
Laser pulse wavelength	0.35 μm
Beamlet power balance	<8% rms over 2 ns
Beamlet pointing accuracy	<50 μm
ICF target compatibility	Cryogenic and non-cryogenic
Annual number of shots with fusion yield	100 with yield 1 kJ–100 kJ 35 with yield 100 kJ–5 MJ 10 with yield 5 MJ–20 MJ
Maximum credible DT fusion yield	45 MJ
Classification level of experiments	Classified and unclassified

designed for a generic site and is consistent with all relevant orders, codes, and standards. The U-shaped building configuration shown in Figure 1 satisfies a key functional requirement; providing for the future addition of a second large target chamber to accommodate special requirements of other communities, such as for weapons effect tests, with minimal interruptions to system operations. Preliminary analysis has shown that a modest upgrade of the currently designed NIF target area and target chamber system would accommodate direct-drive ignition target experiments without impacting the indirect-drive mission.

III. LASER SYSTEM DESIGN

The neodymium glass laser system must provide at least 632 TW/3.3 MJ in a 5.1-ns pulse at 1.053 μm to account for modest beam transport losses, and energy and power conversion efficiencies of 60% and 85%, respectively. A schematic of one NIF beamline is shown in Figure 4. It uses a four-pass architecture with a large aperture optical switch consisting of a plasma electrode Pockels cell and polarizer combination. The laser chain in this beamline was designed using the CHAINOP family of numerical codes that model the performance and cost of high-power solid-state ICF laser systems. These codes vary a number of design parameters to maximize laser output per unit cost, while remaining within a set of constraints. The constraints include fluence maxima, non-linear effects, and pulse distortion. CHAINOP contains several analytical models that simulate the optical pumping process, the propagation of the laser beam through the system (including gain, loss, diffraction, and non-linear optical effects), frequency conversion, and cost. This design procedure is excellent for cost scaling and system tradeoff studies, but does not suffice for predicting detailed performance, which requires analysis with a suite of non-linear physical optics codes, or determining project costs, which are estimated using a detailed engineering design and a rigorous "bottom-up" costing described later in the paper.

The laser chain used in the CDR as the baseline for estimating NIF system cost and performance has a hard aperture of 40 cm × 40 cm. The amplifiers contain 19 neodymium-doped glass laser slabs arranged in a 9-5-5 configuration as shown in Figure 4. Each Brewster-angled slab is 3.4-cm thick. The 1.053-μm performance of this laser chain is shown in Figure 5. At the design point each laser chain should generate 3.9 TW/20.5 kJ. Because only 162 beams are required to achieve the performance criteria, a 192-beam system has a design margin of greater than 15%. Currently, a prototype beamline, Beamlet, is undergoing tests at the Lawrence Livermore National Laboratory to demonstrate performance projections using the large-aperture optical switch. Variations of this design with reduced-aperture switches have comparable performance projections when optimized. Tests on the Beamlet with reduced-aperture switches are planned for next year.

The NIF design incorporates 4-high × 12-wide arrays of laser beams as shown in Figure 1. The design is very compact compared to previous laser fusion systems, increasing overall electrical and optical efficiency while simultaneously reducing system size and cost. The optical pulse generation system provides individually controlled input pulses from one of four tunable fiber oscillators and an integrated optics network located in the master

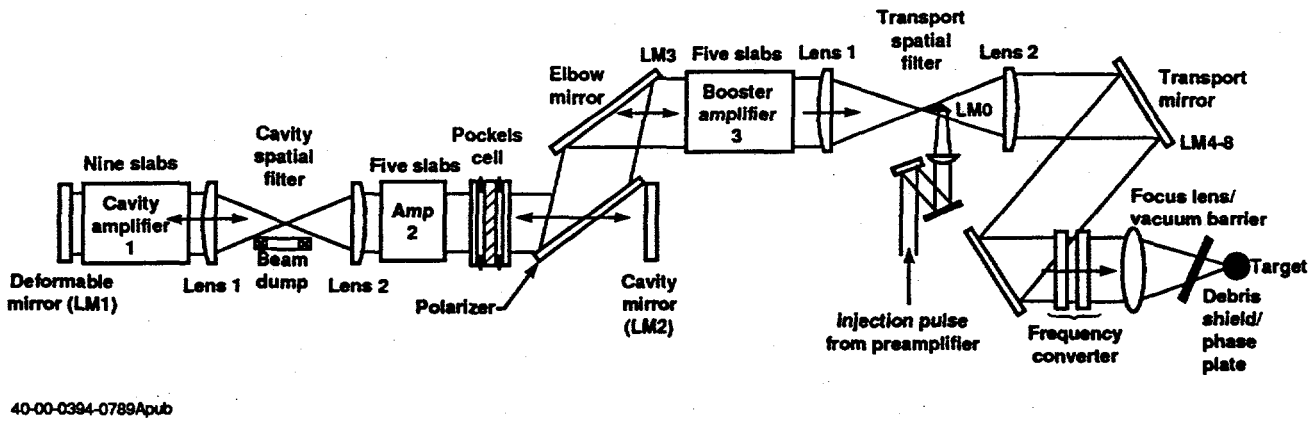

Figure 4. A schematic of one beamline of the NIF laser from pulse injection to final focus on target.

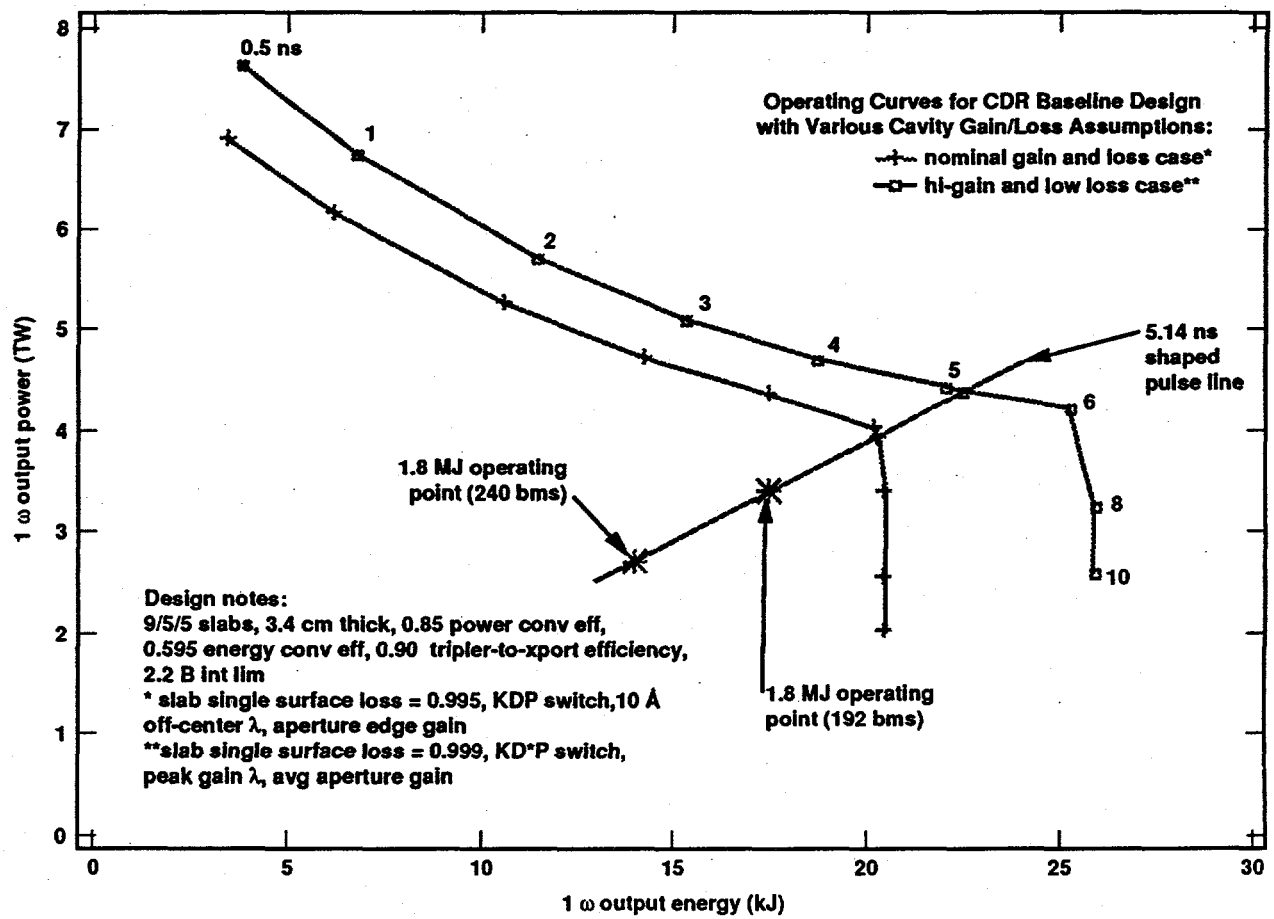

Figure 5. 1.053 μm (1ω) performance curve for the optimized 9-5-5 amplifier design.

oscillator room. The outputs from the master oscillator room are delivered on single-mode polarization preserving fibers to each of 192 preamplifiers. These stand-alone packages, located beneath the transport spatial filters, provide individual power balance capability for each of the 192 beams. The output beams from the preamplifiers are injected into the far-field pinholes of the transport spatial filters, passed through the boost-amplifier stages, the optical switch assemblies, and are then captured inside the multipass cavities. The flashlamps located in the amplifier enclosures that uniformly pump the glass laser slabs are energized with approximately 260 MJ of electrical energy from a modular bank of thin film, metallized dielectric capacitors. After four passes through the cavity amplifiers, the pulses are switched out of the multi-pass, further amplified by the boost stage, and then transported to the target chamber. The laser arrangement allows for top and bottom access to the amplifiers and the optical switch arrays. The pulsed power is transmitted to the amplifiers overhead with large, 30-cm-diameter, coaxial conductors. The space below the amplifiers allows access for assembly and maintenance of any 4-high amplifier column.

A novel feature of this design is the use of deformable mirrors in place of the end cavity mirrors (see Figure 4), to correct for static and pump-induced short-term wavefront aberrations. The wavefront control, alignment, and diagnostic systems support a two-hour system turnaround. Wavefront aberrations resulting from the long-term thermal cooling of the glass laser slabs ultimately limits the shot rate of the laser system. The NIF is currently designed to achieve about 700 full-system performance shots/ year. It is expected that through continued engineering design the system shot rate will increase substantially. This is consistent with experience on all previous ICF glass laser systems, including Nova, which has had its shot rate increase by a factor of six since operations began in 1985.

IV. TARGET AREA DESIGN

A cutaway view of the switchyard and target area is shown in Figure 6. The 192 laser beams are

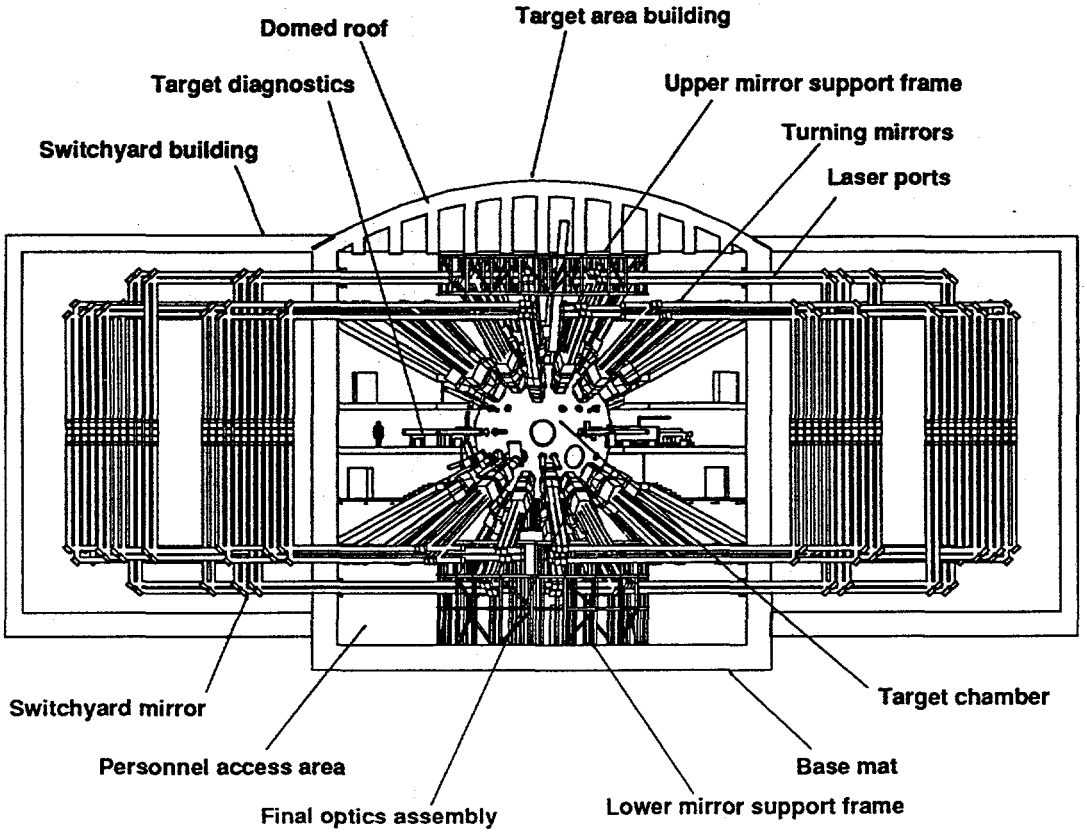

Figure 6. A cutaway view of the NIF target area showing major subsystems.

optically relayed via the transport spatial filters in 48 2 × 2 groupings to the final optics assemblies. The beams are constrained to only "s" and "p" polarized reflections in the optical switchyard and target areas so that they maintain complete azimuthal, spatial, and polarization symmetry with respect to the target. The (48) final optics assemblies are positioned on the 53° outer cone (16 assemblies) and 27° inner cone (8 assemblies) at the top and on the bottom of the target chamber. At the chamber each 2 × 2 grouping is converted to 0.35 μm by a Type I (KDP)/Type II (KD*P) crystal array in the final optics assembly (Figure 7). The final optics assemblies mount to the exterior of the chamber, and also provide 2 × 2 lens arrays for focusing the light onto the target and 2 × 2 debris shield/kinoform phase plate arrays for protecting the lenses from target shrapnel. Each beam in every 2 × 2 grouping can be operated at a different center wavelength to provide the requisite laser temporal beam smoothing. The final optics assemblies are offset from the nominal cone angles by ±4 degrees to provide isolation between opposing beamlines.

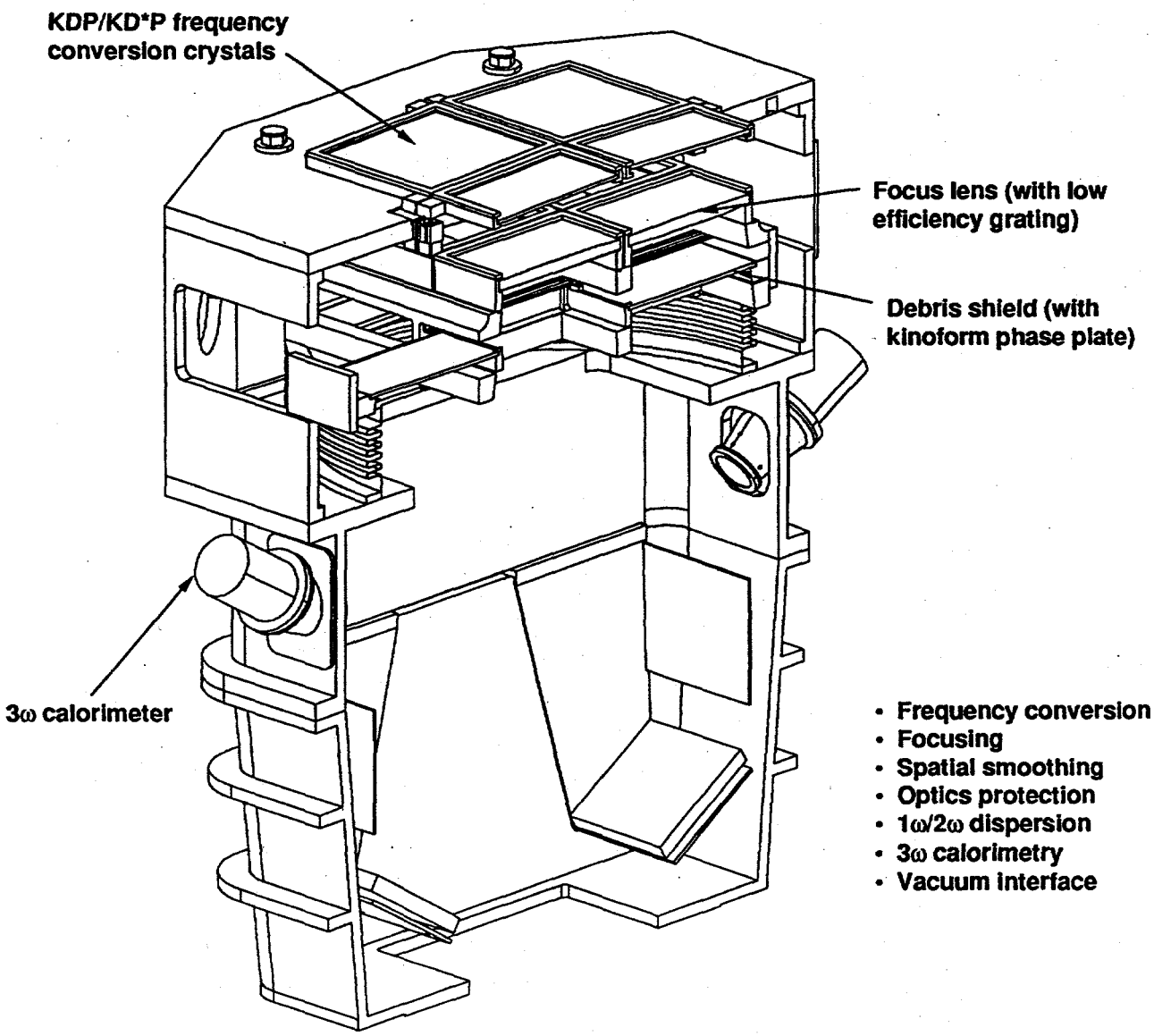

40-00-0294-0600B pub

Figure 7. The final optics assembly has multiple functions.

The target chamber is housed in a reinforced-concrete building with three separate operational areas. The upper and lower pole regions of the target chamber house the final optics and turning mirrors in a Class 1000 clean room. Personnel access to these areas will be limited to preserve cleanliness levels. The cantilevered floor sections of the building provide a separation of the clean-room enclosures at the polar regions from the equatorial target diagnostics area. This horizontal, planar architecture simplifies the design of the access structures required to service the optical components and target diagnostics.

The NIF baseline target chamber is a 10-cm-thick by 10-m internal-diameter spherical aluminum shell designed to accommodate the suite of x-ray and neutron diagnostics required to measure the performance of targets that can achieve ignition. The aluminum wall provides the vacuum barrier and mounting surfaces for the first wall panels, which protect the aluminum from soft x-rays and shrapnel. The unconverted laser light hitting the opposite wall is absorbed by other panels offset from the opposing beam port. The exterior of the chamber is encased in 40 cm of concrete to provide neutron shielding. The chamber is supported vertically by a hollow concrete pedestal and horizontally by radial joints connected to the cantilevered floor. The target area building, chamber, and auxiliary systems are designed to handle 145 shots/year of yields up to 20 MJ as shown in Table 1.

Recent engineering analyses and target physics calculations show that the baseline design can be easily modified, as illustrated in Figure 8, to incorporate a direct-drive ignition capability, further broadening the utility of the facility.

V. NIF PROJECT SCHEDULE

The summary schedule shown in Figure 9 describes the sequence of events leading to NIF operations in October 2002. This overall schedule assumes the NIF Project is initiated by line-item funding in FY1996 consistent with a Key Decision One expected this summer. A more detailed integrated project schedule reveals the critical path that affects the project duration. The major NIF critical path consists of design, site selection, design

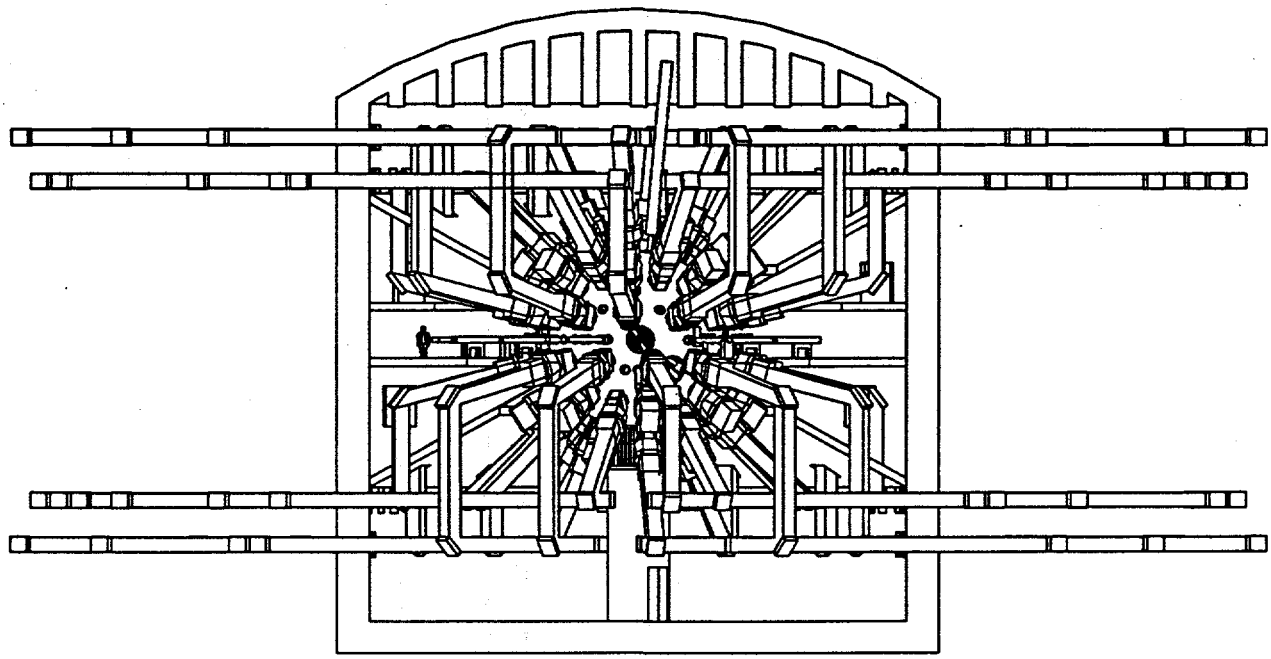

40-00-0694-2750 pub

Figure 8. Implementation of direct drive requires that 24 of the 48 beams be re-positioned. This can be easily accomplished using the NIF optical system design.

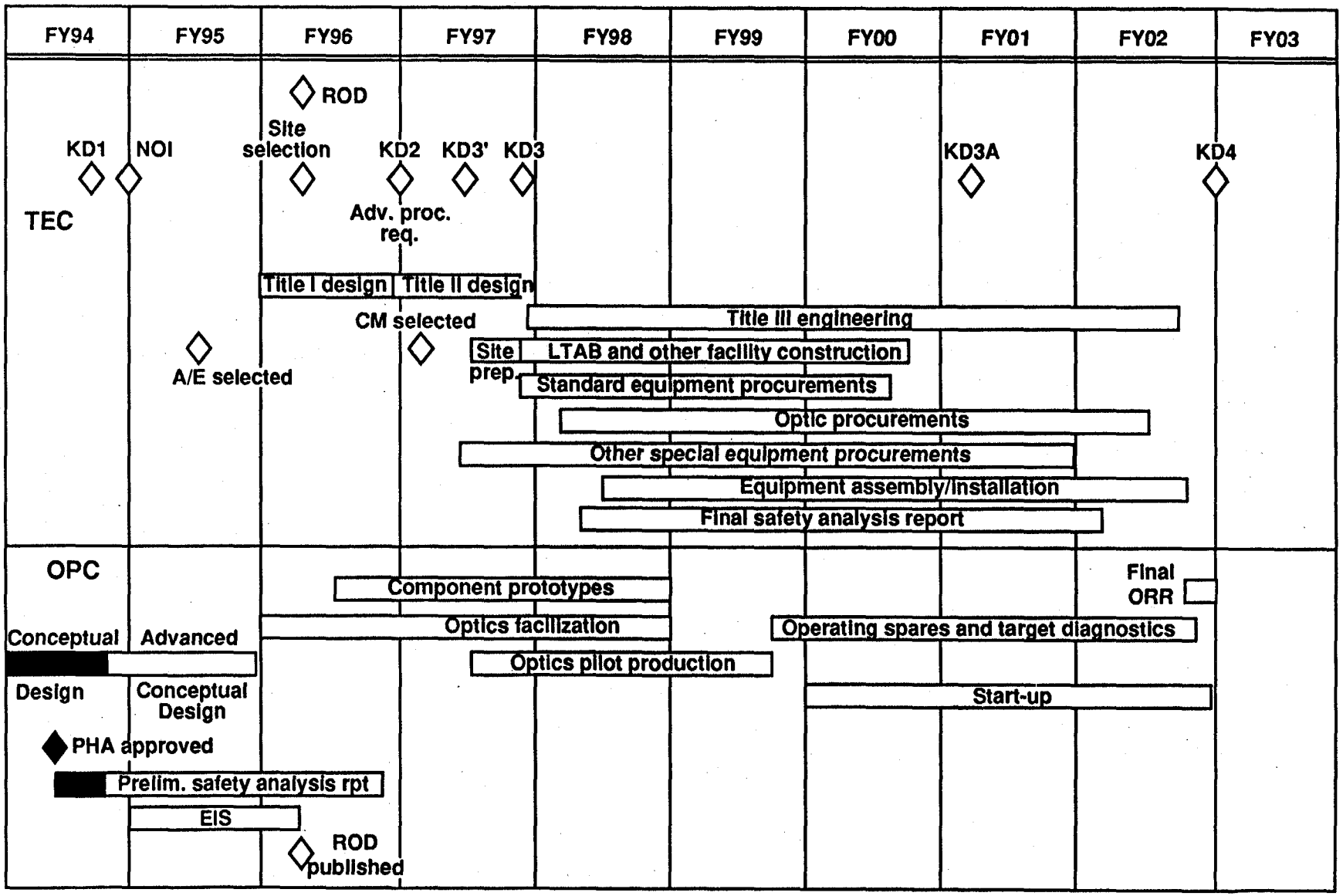

40-00-0494-1786Apub

Figure 9. NIF project schedule.

and construction of the building through beneficial occupancy, laser and other special equipment installation, completion of the acceptance test procedures, and start-up. Construction completion, equipment installation, and start-up are overlapped to shorten the critical path within limits of a practical funding profile. The release of design, construction, procurement, and operating funds is constrained by the DOE Key Decision process.

VI. NIF PROJECT COST

The NIF Total Project Cost (TPC) is the sum of the Total Estimated Cost (TEC) and the Other Project Cost (OPC). The TEC is funded by Plant and Capital Equipment (PACE) funds and the OPC is funded by Operating Expense (OPEX) funds. Division of costs between TEC and OPC is provided in DOE guidelines. TEC activities include, for example, Title I and II design, and Title III engineering; building construction; procurement; assembly and installation of all special equipment; and sufficient spares to pass the acceptance test procedures. OPC activities include, for example, conceptual design; advanced conceptual design; NEPA documentation; vendor facilitization and pilot production; vendor component qualification/reliability/lifetime testing; operational readiness reviews; startup costs; and operational spares.

The costs shown in Table 2 were derived from a "bottom-up" estimate based on a detailed work breakdown structure that is summarized at WBS Level 3 in Figure 10. The Martin Marietta Energy Systems, Inc. Automated Estimating System (AES) was adopted by the Project as its cost management tool. The AES is consistent with DOE Order 5700.2d, "Cost Estimating Analysis and Standardization," and has been used in many other DOE projects in the past. The labor rates, overhead costs, allowances for incidental costs not directly estimated, and other indirect costs were applied to the data base using the AES. Contingency information provided by each estimator for every Level 3 item was used in a separate probabilistic contingency analysis performed by Bechtel Corporation using their Microrac code. The results of that analysis were entered into the AES. Integrated project schedule data was combined with the cost information in the AES to estimate escalation and calculate the Budget Authority and Budget Outlay profiles required in the Project submission to DOE. The annual operating costs for the facility, shown in Table 2, were estimated by identifying all the NIF unit operations based on Nova experience. It does not include, per DOE guidance, the annual ICF Program costs (currently at approximately $175 M/year).

Figure 11 gives a second level breakout of TEC and a third level breakout of OPC (without contingency or escalation). The engineering design was sufficiently detailed to generate costs, typically, at level 5, and, in some cases, at level 6 or 7. Approximately 70% of the costs (in dollars) were derived from catalog prices, vendor estimates, or engineering drawings. The costs in Table 2 have been validated by the DOE and by an Independent Cost Estimator (ICE) team commissioned by DOE.

VII. SUMMARY

The National Ignition Facility design is the product of the efforts of a multi-laboratory team, representing over a twenty year experience base at the Lawrence Livermore National Laboratory, Los Alamos National Laboratory, Sandia National Laboratory, and the Laboratory for Laser Energetics at the University of Rochester. Using the world's most powerful laser to ignite and burn ICF targets, the NIF will produce conditions in matter similar to

Table 2. Summary of NIF costs for 192 beam system.

	Base costs	Contingency	Total	Total
		($M FY94)		($M escalated)
TEC	586	121	707	842
OPC	199	N/A	199	231
TPC	785	121	906	1073
Annual operating costs	57	N/A	57	N/A

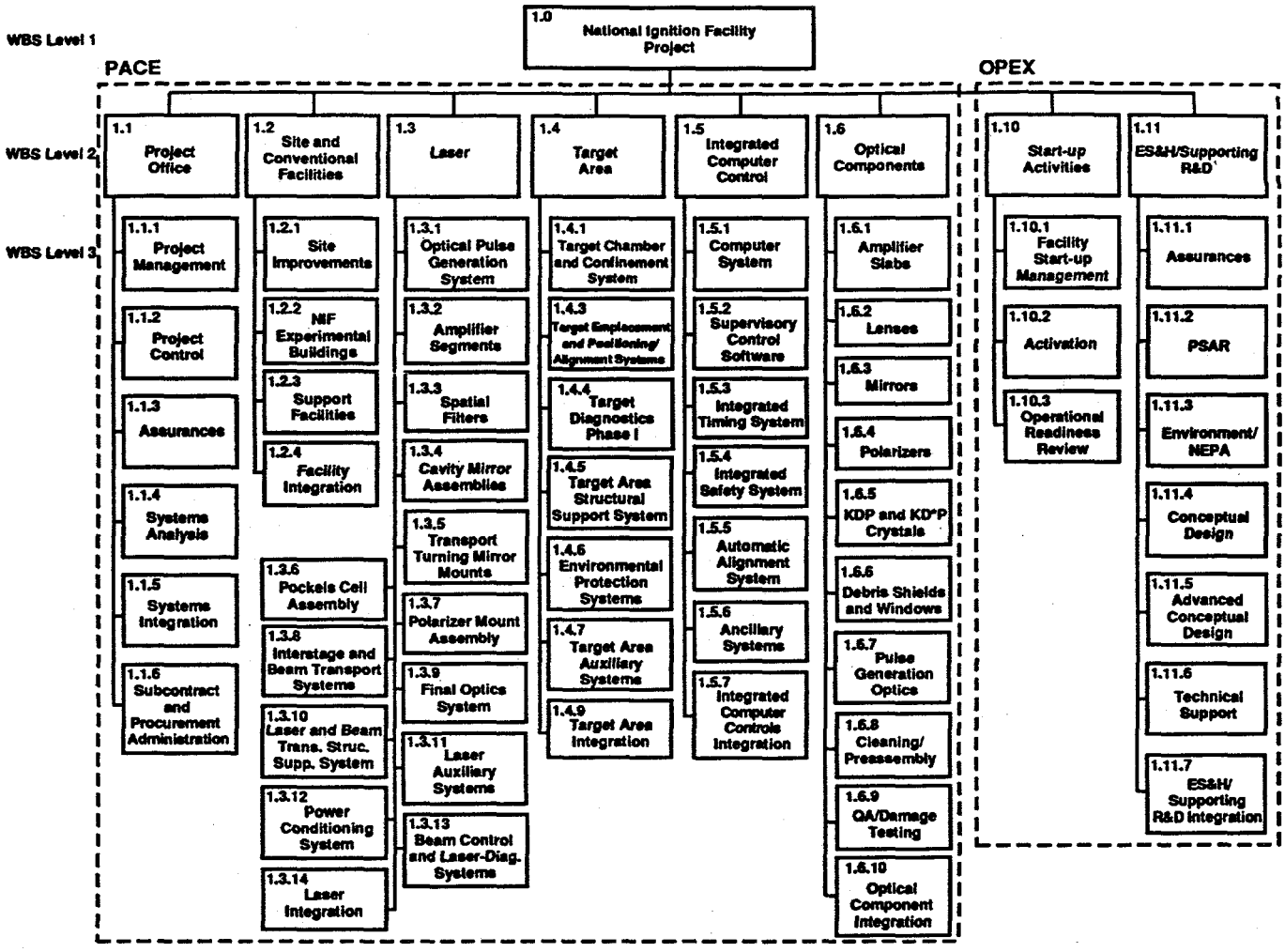

Figure 10. NIF project WBS elements to level 3.

those found at the center of the sun and other stars. New, well characterized, high energy-density regimes will be routinely accessible in the laboratory for the first time. The NIF will impact and extend scientific and technical fields such as controlled thermonuclear fusion, astrophysics and space science, plasma physics, hydrodynamics, atomic and radiation physics, material science, nonlinear optics, advanced coherent and incoherent x-ray sources, and computational physics. The importance and uniqueness of the NIF to these wide-ranging fields of science and technology have been recently reviewed in a series of workshops.[3] If authorized in FY1996, the NIF could begin operations in FY2003.

This work was performed under the auspices of the U.S. DOE by LLNL under contract no. W-7405-Eng-48.

REFERENCES

1. Committee for a Second Review of DOE's ICF Program, *Final Report—Second Review of the Department of Energy's Inertial Confinement Fusion Program*, National Academy of Sciences, Commission on Physical Sciences, Mathematics, and Applications, National Research Council (National Academy Press, Washington, D.C., September 1990).
2. *National Ignition Facility Conceptual Design Report*, Lawrence Livermore National Laboratory, Livermore, CA, UCRL-PROP-117093, (1994).
3. *Utility of the National Ignition Facility*, Lawrence Livermore National Laboratory, Livermore, CA, NIF-LLNL-94-240, UCRL-117384, (1994).

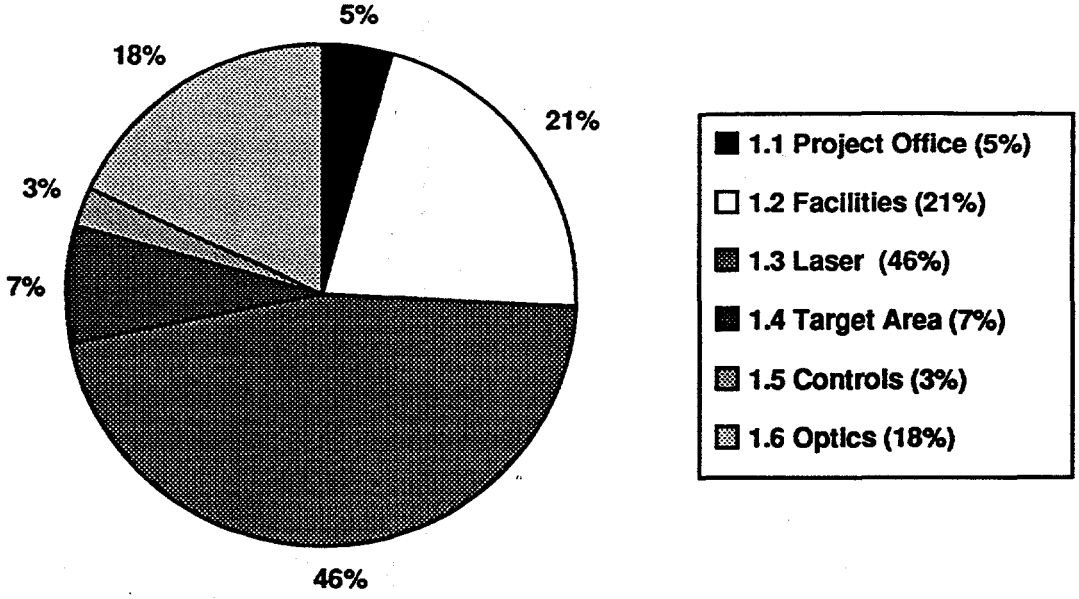

40-00-0494-1669 pub

Figure 11a. Total Estimated Cost (TEC) (without contingency in unescalated dollars) broken down to level 2.

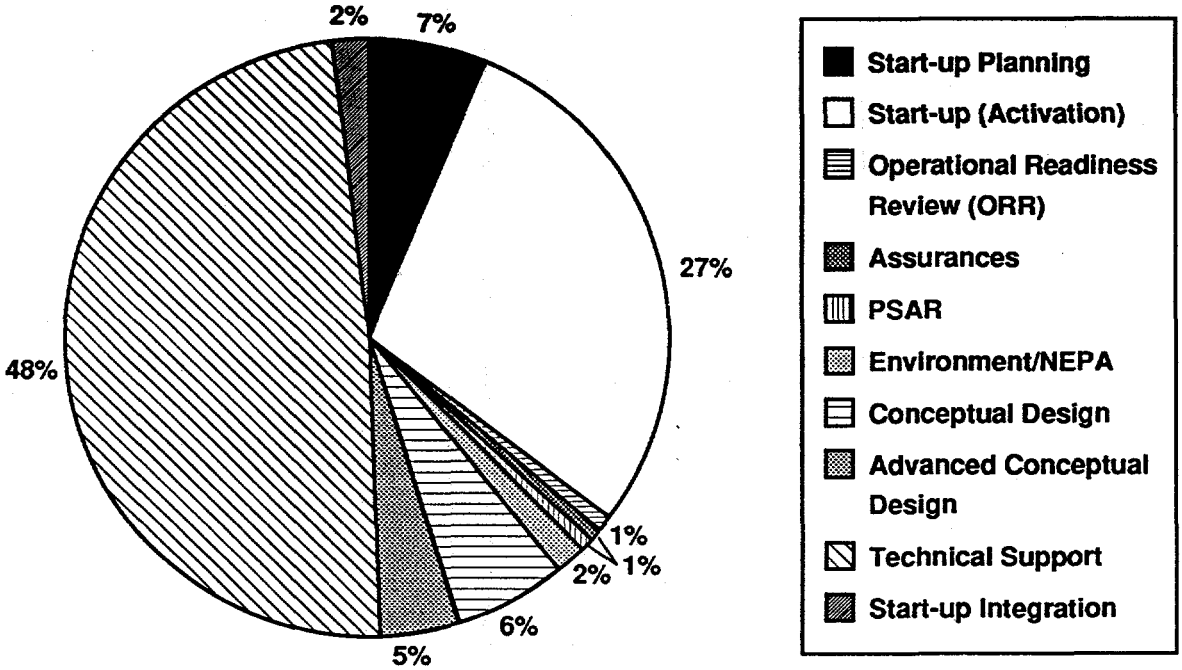

40-00-0494-1720Apub

Figure 11b. Other Project Cost (OPC) (in unescalated dollars) broken down to level 3.