UR-1024

ORNL/TM-5798

Design, Operation, and Initial Results from Capsule OC-1, the First of a Series of Graphite Creep Irradiation Experiments

R. L. Senn
J. A. Conlin
W. H. Cook
W. P. Eatherly

MASTER

OAK RIDGE NATIONAL LABORATORY
OPERATED BY UNION CARBIDE CORPORATION FOR THE ENERGY RESEARCH AND DEVELOPMENT ADMINISTRATION

DISCLAIMER

This report was prepared as an account of work sponsored by an agency of the United States Government. Neither the United States Government nor any agency Thereof, nor any of their employees, makes any warranty, express or implied, or assumes any legal liability or responsibility for the accuracy, completeness, or usefulness of any information, apparatus, product, or process disclosed, or represents that its use would not infringe privately owned rights. Reference herein to any specific commercial product, process, or service by trade name, trademark, manufacturer, or otherwise does not necessarily constitute or imply its endorsement, recommendation, or favoring by the United States Government or any agency thereof. The views and opinions of authors expressed herein do not necessarily state or reflect those of the United States Government or any agency thereof.

DISCLAIMER

Portions of this document may be illegible in electronic image products. Images are produced from the best available original document.

ORNL/TM-5798
Dist. Category UC-77

Contract No. W-7405-eng-26

Engineering Technology Division

HTGR BASE TECHNOLOGY PROGRAM

Graphite Creep Irradiation Experiment (189a OH056)

DESIGN, OPERATION, AND INITIAL RESULTS FROM CAPSULE OC-1, THE FIRST OF A SERIES OF GRAPHITE CREEP IRRADIATION EXPERIMENTS

R. L. Senn W. H. Cook
J. A. Conlin W. P. Eatherly

NOTICE
This report was prepared as an account of work sponsored by the United States Government. Neither the United States nor the United States Energy Research and Development Administration, nor any of their employees, nor any of their contractors, subcontractors, or their employees, makes any warranty, express or implied, or assumes any legal liability or responsibility for the accuracy, completeness or usefulness of any information, apparatus, product or process disclosed, or represents that its use would not infringe privately owned rights.

Manuscript Completed — April 25, 1977
Date Published — May 1977

NOTICE: This document contains information of a preliminary nature. It is subject to revision or correction and therefore does not represent a final report.

Prepared by the
OAK RIDGE NATIONAL LABORATORY
Oak Ridge, Tennessee 37830
operated by
UNION CARBIDE CORPORATION
for the
ENERGY RESEARCH AND DEVELOPMENT ADMINISTRATION

DISTRIBUTION OF THIS DOCUMENT IS UNLIMITED

CONTENTS

Page

ABSTRACT 1

INTRODUCTION 1

PROGRAM OBJECTIVES AND DESIGN CRITERIA 2

Principal Objectives 2

Type of Test 3

Test Materials 3

Test Parameters 4

DESIGN OF THE ORR FACILITY AND THE 900°C CREEP CAPSULE OC-1 4

Irradiation Facility 4

Capsule and Test Specimens 7

Temperature Control of Specimens 13

Computer and Ancillary Equipment 18

Test Specimen Configurations and Test Plans 19

OPERATION AND INITIAL RESULTS 22

Summary of Results 22

Specimen Temperature Control 24

Movable Thermocouples 26

Fixed Thermocouples 28

Heaters 29

Pressure Systems 29

LVDT Load Cell Transducers 30

Computer Operation 30

OC-1 Experiment Postirradiation Examination 31

APPLICATIONS AND FUTURE PLANS 35

ACKNOWLEDGMENTS 36

REFERENCES 36

DESIGN, OPERATION, AND INITIAL RESULTS FROM CAPSULE OC-1, THE FIRST OF A SERIES OF GRAPHITE CREEP IRRADIATION EXPERIMENTS

R. L. Senn W. H. Cook
J. A. Conlin W. P. Eatherly

ABSTRACT

A series of 12 irradiation experiments was designed to evaluate the creep characteristics of graphites when exposed to elevated temperatures and high fast fluences. Various graphites of interest to HTGR designers are to be examined. The series encompasses the irradiation of 28 specimens, each 15.24 mm (0.6 in.) in diameter by 25.4 mm (1 in.) long, to incremental exposures of 1, 2, 4, and 8 E+25 n/m^2 (E > 0.18 MeV) at 900°C; 28 similar specimens to the same exposures at 600°C; and 28 others at 1250°C. A compressive stress of 13.79 MPa (2000 psi) is applied to 20 of the specimens in each test by means of a metal bellows, which is expanded by gas pressure against the specimen columns; 8 of the stacked specimens are stressed to 20.68 MPa (3000 psi) by a reduction in diameter. This report describes special features of the capsules, which include (1) movable centerline thermocouples to measure the temperature profile along the axes of the capsule, (2) special linear variable differential transformer-type load cells to monitor the applied load, and (3) a computerized temperature control system designed to provide accurate longitudinal temperatures over the 0.508-m (20-in.) length of the test specimen columns.

Irradiation of capsule OC-1, the first test of this series, has been completed. The capsule was operated at a nominal specimen temperature of 900°C in the E-5 core position of the Oak Ridge Research Reactor for ∿1139 hr at 30 MW reactor power to a peak fluence of 1.3 E+25 n/m^2 (E > 0.18 MeV). Operational characteristics of this experiment and some preliminary results are presented. Detailed characterization of the graphite specimens will be reported separately.

INTRODUCTION

Dimensional distortion induced by fast-neutron irradiation can produce high internal stresses in graphite. In general, these stresses are limited by fast-neutron irradiation-induced creep, which provides a

stress-relaxation mechanism. It is necessary that the creep coefficients be well known in order to properly design for safety and reliable operation of reactors that use graphite in the cores. This knowledge is necessary not only to calculate anticipated static stress loads in regions of the core where thermal and fluence gradients occur, but also to evaluate abnormal transient conditions, such as thermal stress, on shutdown and startup and superimposed cyclic loading. Creep data exist for a number of graphites of United States, European, and Russian origin. However, these data are scattered by factors of 3 to 5, and the graphites do not correspond to the coarse-grained, isotropic graphites being considered for large-scale high-temperature gas-cooled reactors (HTGRs). It is obviously necessary to develop creep data for these latter materials. The work described below is a part of the overall programs by General Atomic Company (GAC) and the Oak Ridge National Laboratory (ORNL) for the characterization and standardization of graphites employed in HTGRs.

The basic objective of this work is to determine the primary and secondary creep coefficients for the neutron-induced creep of HTGR graphites at 600, 900, and 1250°C for accumulated fluences $\geq$8 E+25 n/m^2 (E > 0.18 MeV).* The maximum design fluence accumulation for core graphite of a 1000-MW(e) central station HTGR during the reactor lifetime is 8 E+25 n/m^2.†

PROGRAM OBJECTIVES AND DESIGN CRITERIA

Principal Objectives

Our program plan for the study of the fast-neutron-induced creep of graphite is oriented about a series of 12 irradiation capsules, the OC series; the source of fast neutrons will be the Oak Ridge Research Reactor

*Unless otherwise stated, all fast-neutron energies shall be of this value.

†Equivalent to the more commonly stated units of 8×10^{21} neutrons/cm^2.

(ORR). The program has two main objectives: (1) to design and construct an irradiation facility in the ORR E-5 position, and (2) to determine both the primary and secondary creep coefficients and other property data (such as the electrical resistivity, sonic velocity, and coefficient of thermal expansion) required for the constitutive equations for graphites employed in high-temperature reactors.

Type of Test

The best way to accurately determine the creep coefficients for any set of conditions is to continuously monitor the creep strain during the test; however, the limitations on the quantity of specimens that could be tested and the complications involved in the test design and the maintenance of the integrity of strain gages or dilatometers make it impractical to conduct tensile tests at this time. Therefore, we selected the simplest test — a constant-stress compressive test — as the basis for our design. This type of test is less complex and therefore less expensive than tension stress tests and also has the advantage that the primary and secondary creep strains are reported[1] to be approximately equal for compression and tension stresses.

Test Materials

The selection of the first materials for these tests was predominantly influenced by the HTGRs currently in operation or being designed. The core material, graphite grade H-327, for the Fort St. Vrain Reactor is represented by sufficient numbers of specimens to substantiate its anticipated creep behavior. A small number of specimens of graphite grade AXF-8QBG1 (previously irradiated at the Battelle Pacific Northwest Laboratories to 1.0 E+26 n/m^2) are included for the purposes of extending data on creep behavior to very high fluences after breakaway expansion. Most of the specimens in these tests are from grade H-451 graphite, which is a near-isotropic material manufactured by the Great Lakes Carbon Corporation, New York, and one of the principal contenders for 1000-MW(e) HTGR application. It was selected for use in this series

because it is currently the most thoroughly characterized material of its kind and thus far appears to be acceptable.

Test Parameters

Our basic objective will be to determine the primary and secondary creep coefficients as functions of fluence, temperature, stress, and Young's moduli of elasticity. These data will be obtained with a series of capsules that are alternately irradiated, in the order of priority, at 900, 600, and 1250°C in fluence increments of approximately 1, 1, 2, and 4 E+25 n/m^2. Irradiation will continue until each set of test specimens for each test temperature has accumulated a fluence in excess of 8 E+25 n/m^2, which is maximum design fluence for a full-scale HTGR. The compressive stresses at each temperature will be 13.8 MPa (2000 psi) and 20.7 MPa (3000 psi). The dimensions, Young's modulus, and shear modulus for each graphite specimen will be determined prior to neutron irradiation and after each accumulated increment of fluence. As explained later in more detail, each capsule will contain a set of unstressed specimens that match the stressed specimens. These unstressed specimens serve as controls and are characterized before and after irradiations as are the stressed specimens. Basically, the total creep strains are determined by the dimensional differences between stressed specimens and their matching control specimens after each cycle in the ORR. The primary creep strain has been found to be recoverable under irradiation if the stress is removed.[1] Therefore, selected stress-tested specimens will be reirradiated at their test temperature to recover, and thereby determine, their primary creep strains. Our objective is to acquire the creep data to an accuracy within 10%; that is, good engineering design data are sought.

DESIGN OF THE ORR FACILITY AND THE 900°C CREEP CAPSULE

Irradiation Facility

As indicated above, the capsules for each experiment will be irradiated sequentially in the E-5 core position of the ORR. This requires only a minor rearrangement of the ORR core loading pattern to permit

construction of an irradiation facility. This location within the ORR core and the general configuration of an experiment are shown in Figs. 1 and 2. The E-5 core position provides a large [76 × 76 mm (3 × 3 in.)] water-cooled facility that will accommodate an experiment up to about 71 mm (2.8 in.) in overall diameter. The experiments will be placed in the E-5 position inside an aluminum core filler piece.

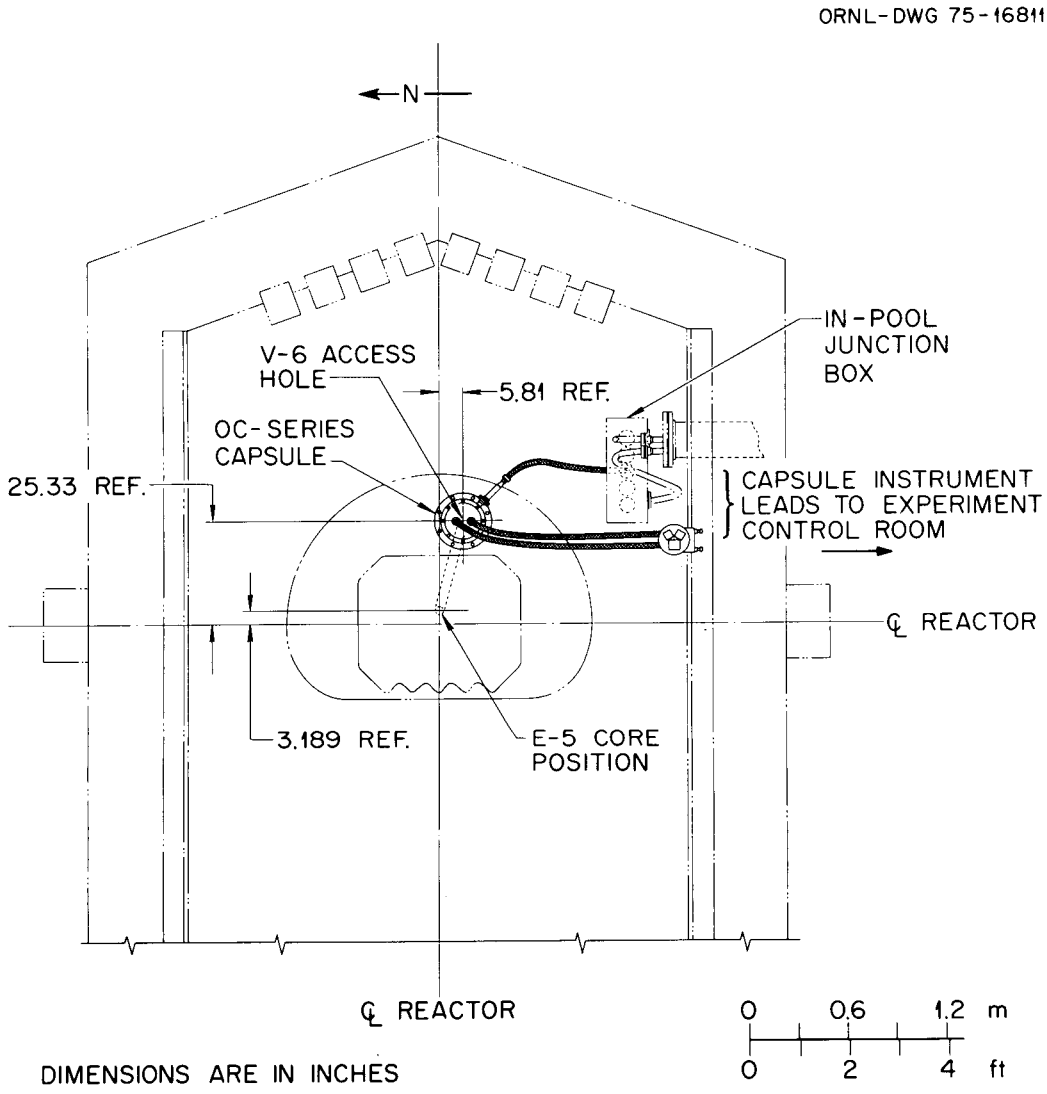

Fig. 1. Top view of an OC-series capsule installed in the ORR E-5 position.

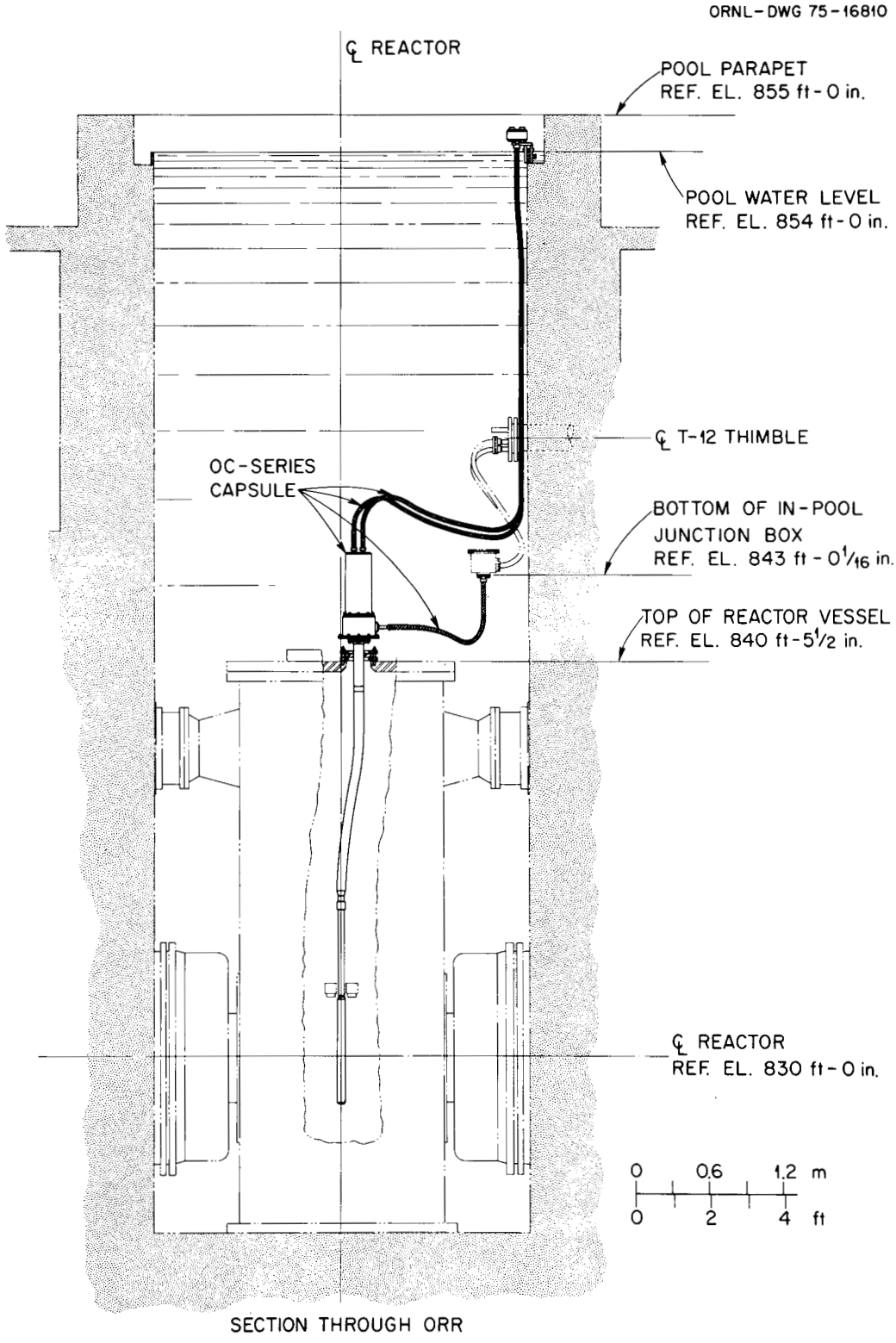

Fig. 2. Elevation view of an OC-series capsule installed in the ORR E-5 position.

Capsule and Test Specimens

Each experiment is contained inside a type 304 or 304L stainless steel container. Basically, an experiment consists of a high-density isotropic graphite* holder [59.61 mm (2.347 in.) in diameter, 591 mm (23 1/4 in.) long] having four longitudinal holes 90° apart; each hole contains 14 diametrically centered graphite test specimens. The experiment also includes metal bellows for loading the test specimens, temperature trimming heaters, thermocouples, and flux monitors. Beyond this, the accuracy and precision required, plus the complexity of this most direct approach, require complex designs and sophisticated equipment for the capsules and the irradiation test facility.

Capsule OC-1 was designed to irradiate twenty-eight 15.24-mm-diam (0.6000-in.) by 25.4-mm-long (1.0000-in.) compressively stressed graphite test specimens at 900°C to the first planned exposure level of 1 E+25 n/m^2. A compressive stress of 13.8 MPa (2000 psi) was applied to 20 of the specimens by precalibrated metal bellows expanded by gas pressure against the specimen columns. Eight of the specimens in the two columns had reduced diameters so as to increase the stress to 20.7 MPa (3000 psi). Each capsule also included 28 unstressed control specimens made of the same graphite used in the stressed specimens.

Special features of the capsule design included (1) movable centerline thermocouples to measure the temperature profile along the axes of the control specimens of the capsule, (2) special linear variable differential transformer (LVDT) type load cells to monitor the applied load, and (3) computerized temperature control designed to provide accurate and precise uniform temperatures over the 0.508-m (20-in.) length of the test specimen columns. These features are described in more detail below.

Figure 3 is a cross-sectional view showing the two stressed specimen columns in the in-core portion of the capsule. The specimens have shallow holes in each end to accommodate the graphite pins that pass through the spacers and serve as centering guides for the specimen column.

---

*Grade AXF-8Q, manufactured by POCO Graphite, Inc., a subsidiary of Union Oil Corporation, Decatur, Tex.

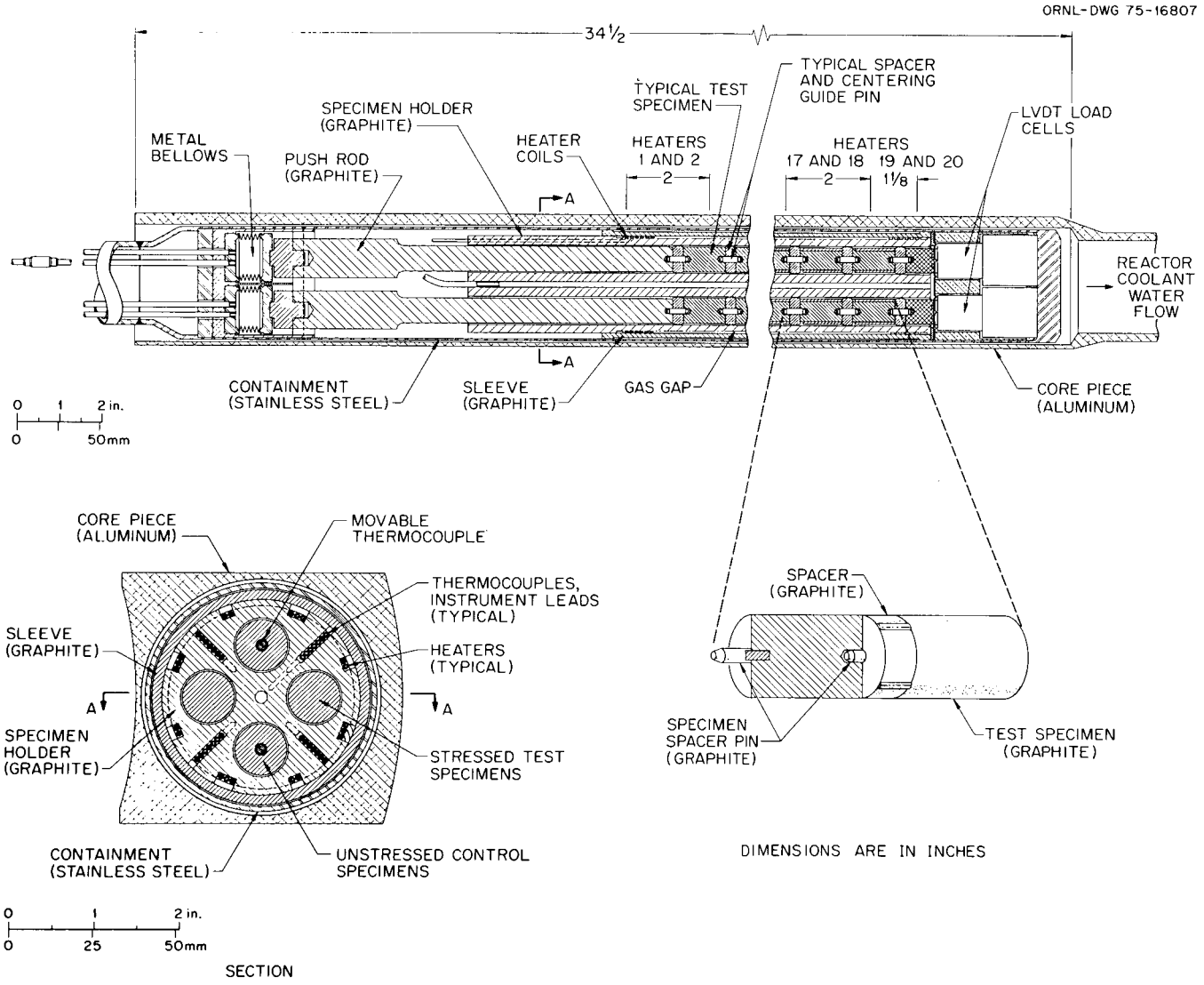

Fig. 3. Cross-sectional view of the in-core portion of ORR capsule showing the stressed columns.

The spacers center the column by means of longitudinal centering ridges protruding from their cylindrical surfaces. The centering is important to the proper loading and temperature control of the specimens. Photographs of typical specimens, spacers, and pins are shown in Figs. 4 and 5. The split graphite sleeve, which is visible in Fig. 5, was used on the smaller diameter, highly stressed specimens to provide the correct

PHOTO 4130–76

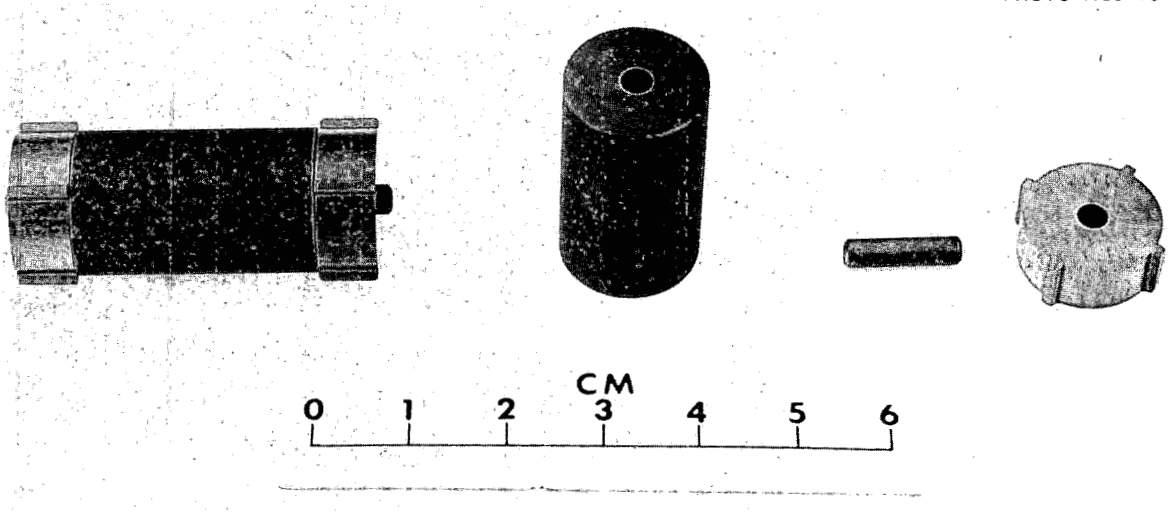

Fig. 4. ORR capsule OC-1 — typical stressed specimens with spacers and centering pins.

PHOTO 4131–76

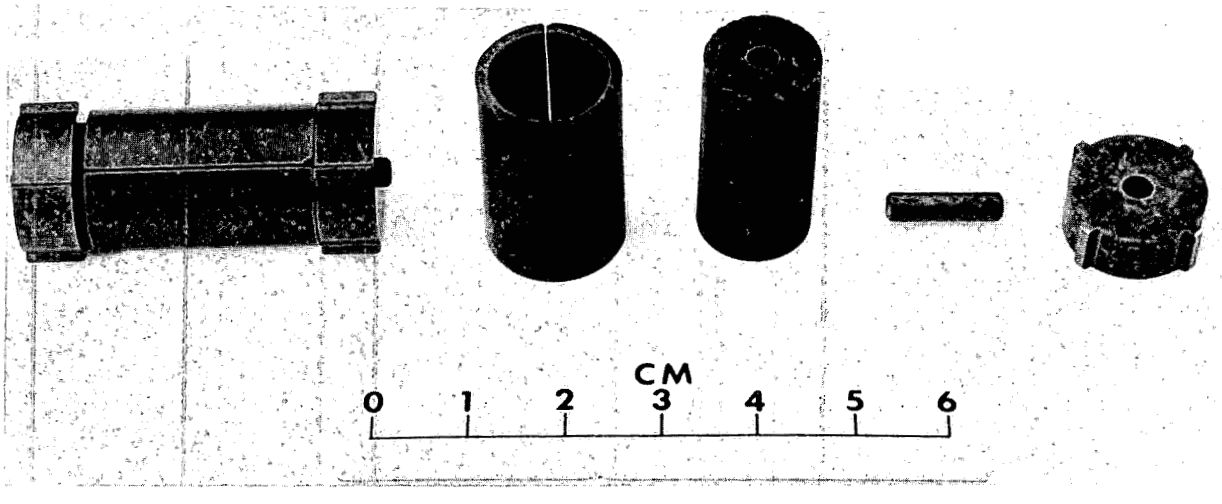

Fig. 5. ORR capsule OC-1 — typical highly stressed specimens with spacers, centering pins, and split sleeve.

thermal resistance across the gas gap and thus control the specimen temperature to the design value. A typical stressed specimen column is shown in Fig. 6.

Each metal bellows, shown at the top of the two specimen columns in Fig. 3 and in detail in Fig. 7, was pressurized with helium gas to 4.89 MPa (854 psig) to provide a load of 2515 N (565.4 lb), which gave the required compressive stress. Force from each bellows was transmitted to the specimen column through a graphite push rod. At the lower end of each column, the force was sensed by an LVDT-type load cell (shown in Fig. 8), which was designed to measure up to 3115 N (700 lb) at 480°C. Although monitoring of the pressure in the bellows was the primary measure of the load being applied to the specimens, the LVDT-type load cell was intended to provide backup information during the early stages of the irradiation and ensure that the force was indeed transmitted throughout the specimen column. The load cell was expected to suffer radiation damage and decalibration at exposures exceeding 3 E+24 n/m^2; but, as discussed later, the device provided very little useful information even during initial capsule operation.

The unstressed control specimen columns are shown in the cross-sectional view in Fig. 9, and a typical control specimen with spacers is presented in Fig. 10. These specimens were stacked and centered in a manner similar to the stressed specimens, except that a longitudinal hole was provided to serve as a guide for the 3.2-mm-diam (1/8-in.), stainless steel-sheathed, Chromel-Alumel movable thermocouple that was installed in each column. These thermocouples can be moved through a 0.38-m (15-in.) stroke, thus providing temperature traverses from the midplane of the uppermost specimen to the midplane of the lowest specimen in each column. The sheathed thermocouples passed up through the various bulkheads and through a 6.4-mm-diam (1/4-in.) guide tube to the junction box located just above the reactor vessel top flange. This junction box housed the rack-and-pinion assemblies that drove the thermocouples. A rack was attached to the top end of each movable thermocouple, and an electrically driven motor drove the rack-and-pinion gear assembly and the attached thermocouple up and down at a rate of 0.83 mm/s (2 in./min). A variable resistor driven by a gear from the rack provided a signal related to the

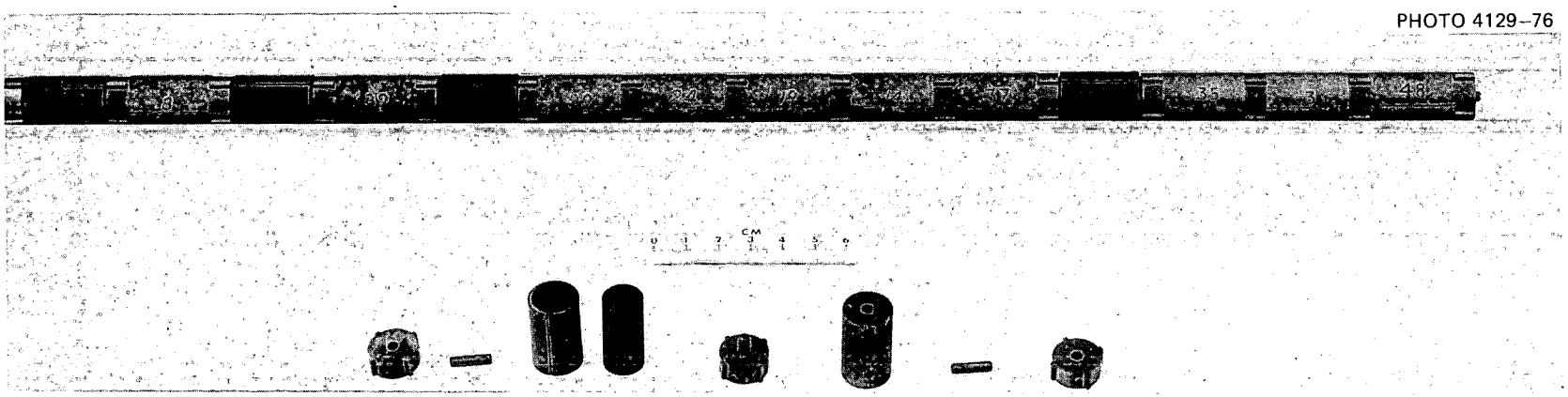

Fig. 6. ORR capsule OC-1 — assembly of stressed specimen column prior to insertion into the graphite holder.

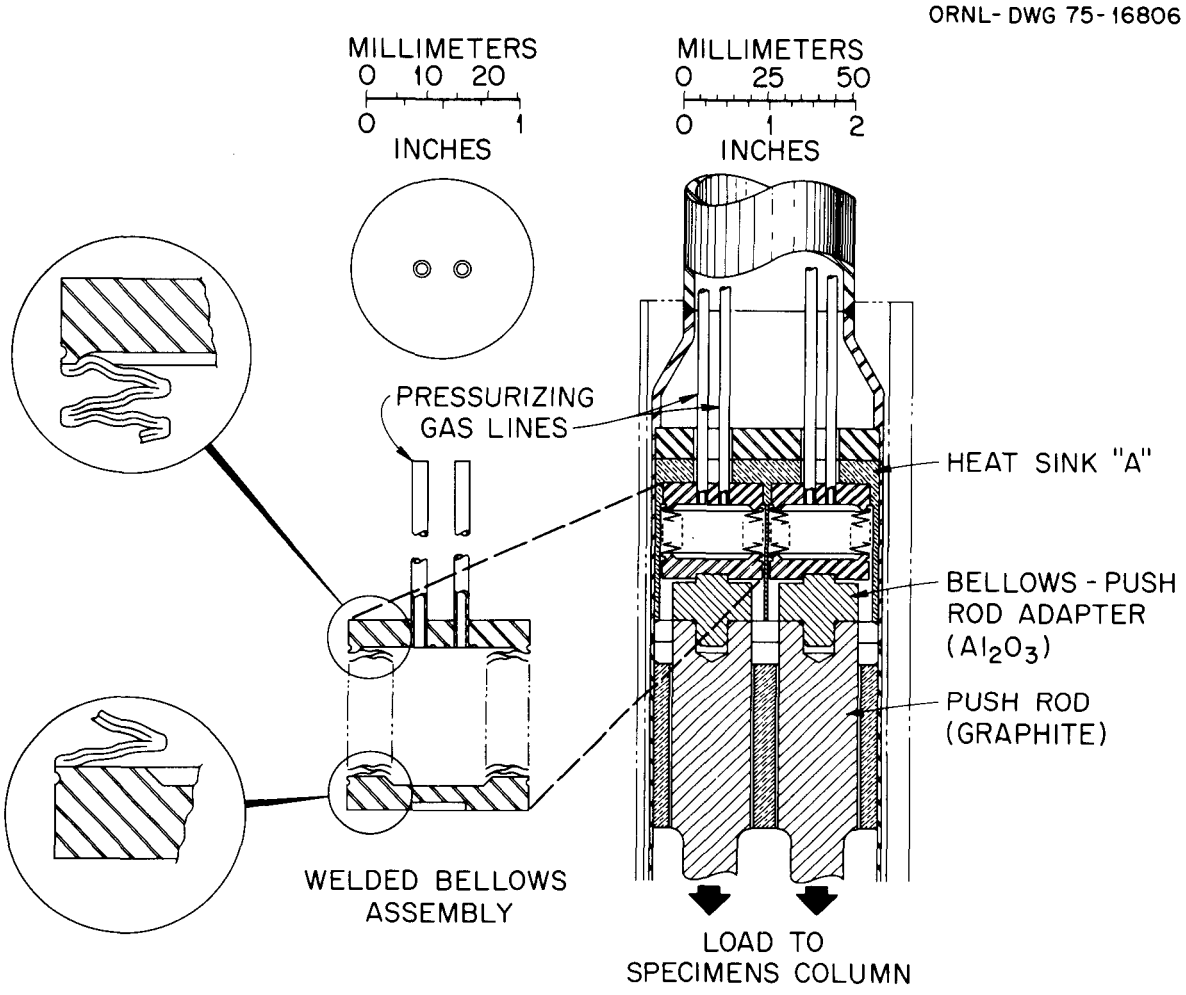

Fig. 7. ORR capsule OC-1 — detail of bellows loading system.

position of the thermocouple. By operation of the motor, the thermocouple position was controlled to less than ±3.2 mm (±1/8 in.) in longitudinal elevation. The thermocouple signal was transmitted to lead wire by means of sliding contacts; these moved along a gold-plated insulated strip that served as the conduit from the contacts to the lead wire. Bench tests demonstrated that the units were mechanically reliable and that no detectable error was introduced in the thermocouple temperature signal.

In addition to the two movable thermocouples, twenty-six 1.6-mm-diam (1/16-in.) stainless-steel-sheathed, MgO-insulated, Chromel Alumel thermocouples were provided for monitoring capsule temperatures and/or for control purposes. Of these, 23 were located within the graphite specimen holder adjacent to the test specimens at various elevations along the capsule.

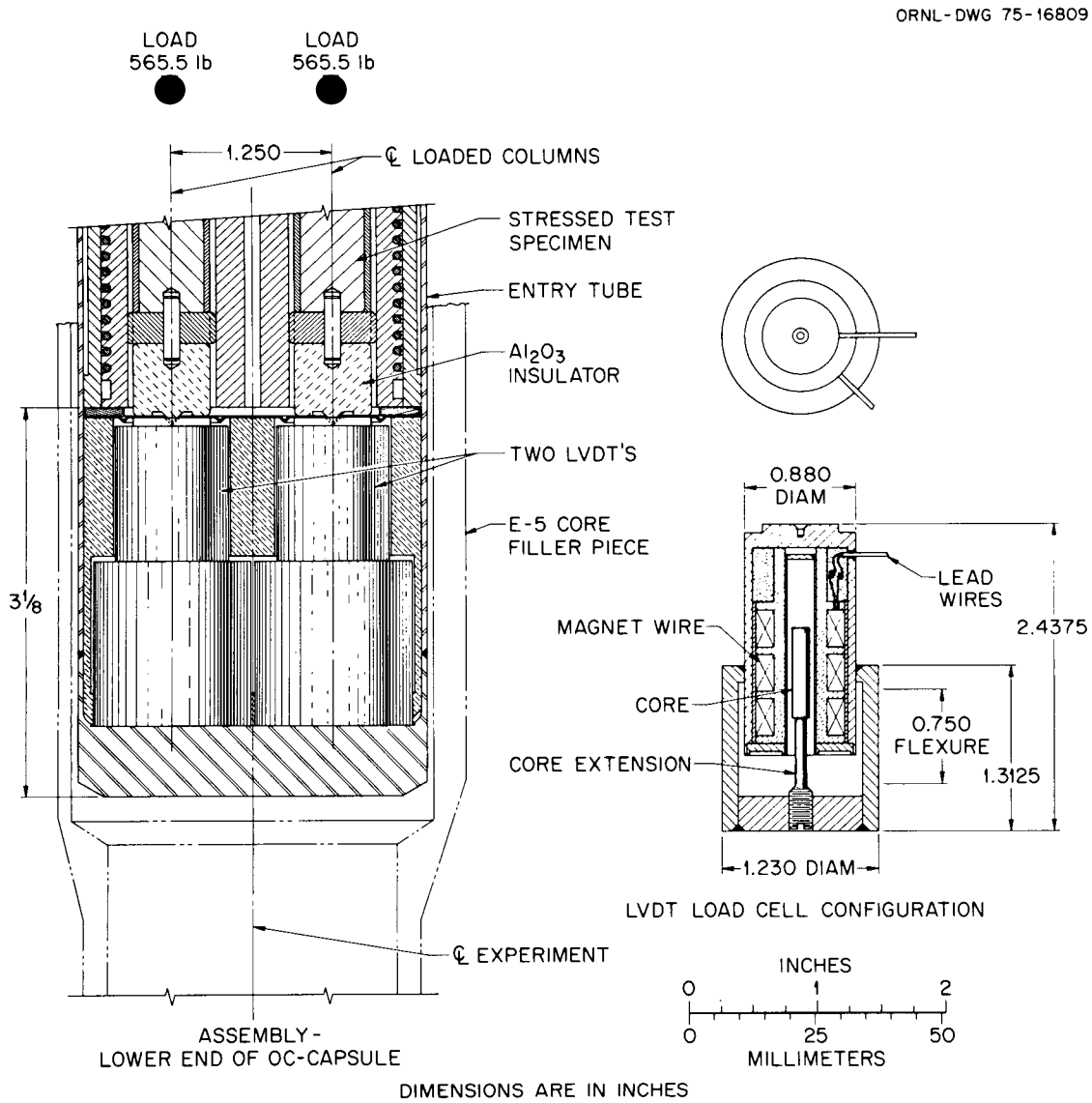

Fig. 8. ORR capsule OC-1 — detail of LVDT load cell assembly.

Temperature Control of Specimens

As stated previously, one of the important objectives of the experiment was to maintain accurate and precise temperature control along the specimen column. To achieve adequate control, the capsule was designed to operate on gamma heat alone approximately 100°C below design temperature. The gamma heat rate in this experiment position in the ORR varies from a low of about 5.4 W/g to a high of about 10 W/g, as shown in Fig. 11. The

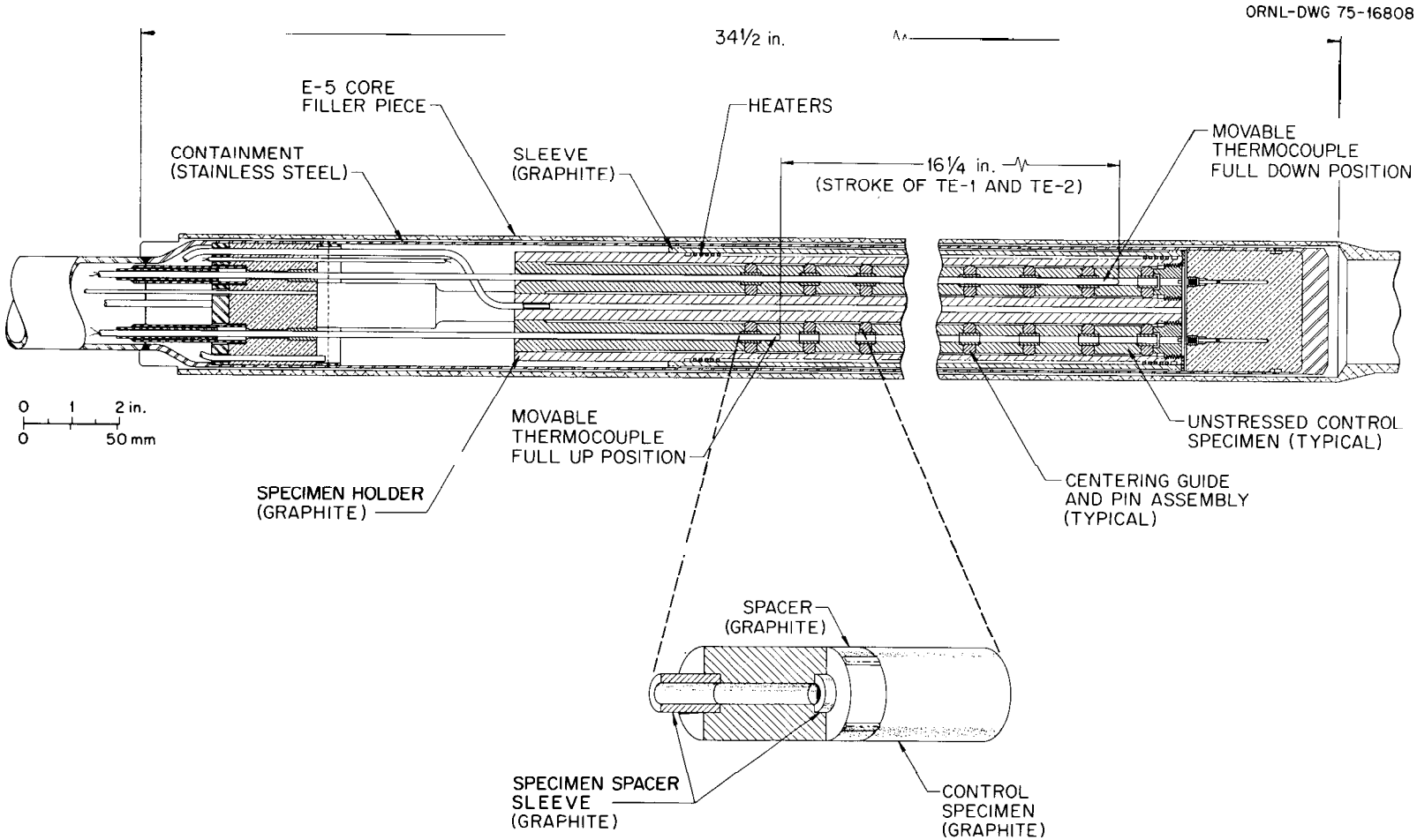

Fig. 9. Cross-sectional view of the in-core portion of the ORR capsule OC-1 showing the unstressed columns.

PHOTO 4132-76

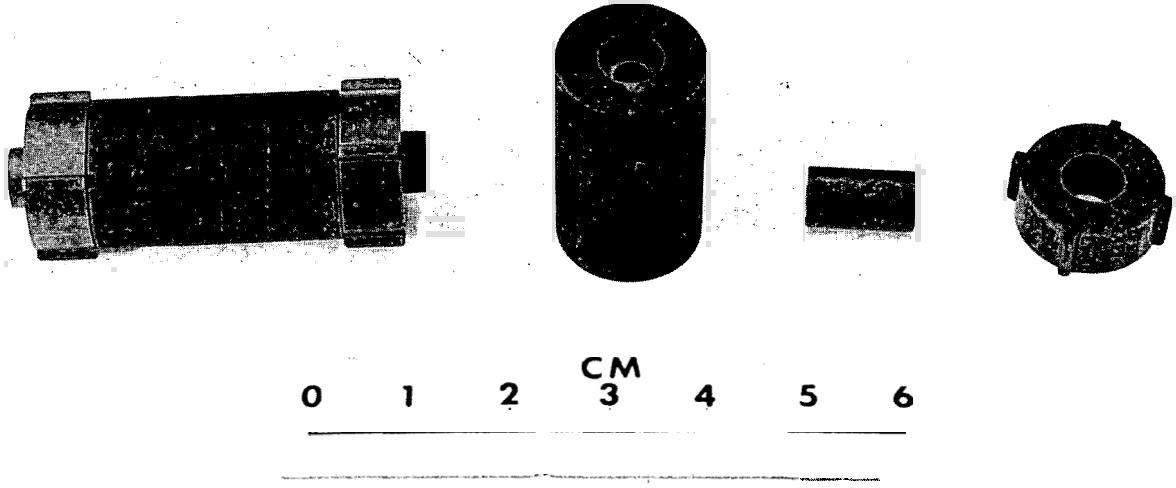

Fig. 10. ORR capsule OC-1 — typical unstressed (control) specimen with spacers and centering pins.

design provided a thermal resistance helium-filled gas gap between the specimen holder sleeve (see Fig. 3) and the water-cooled capsule vessel. The diameter of the specimen holder sleeve was stepped in a manner that provided five different radial gaps. These gaps were designed to accommodate the variation in gamma heating rate and to establish approximately the desired constant longitudinal temperature level.

Design operating temperature and control was achieved by twenty 1.6-mm-diam (1/16-in.) stainless-steel-sheathed, MgO-insulated, Nichrome V heaters wrapped around the specimen holder, as shown in Figs. 3 and 12, and retained there by the graphite sleeve that is slipped over the holder. Figure 12, a photograph made during capsule assembly, shows a pair of heaters being wrapped in the helical grooves on the outside of the specimen holder. A special fixture was required to install the heaters. Some of the fixed thermocouples may be seen in grooves passing under the heater coils. Ten 50-mm-long (2-in.) heated zones, each with two heaters operated in parallel, were positioned along the 0.51-m (20-in.) length of the specimen holder. Each heater was capable of operation at up to 2 kW/linear meter (50 W/linear inch); however, they were expected to operate well below this maximum in order to maintain the design operating temperature of 900°C for the specimens.

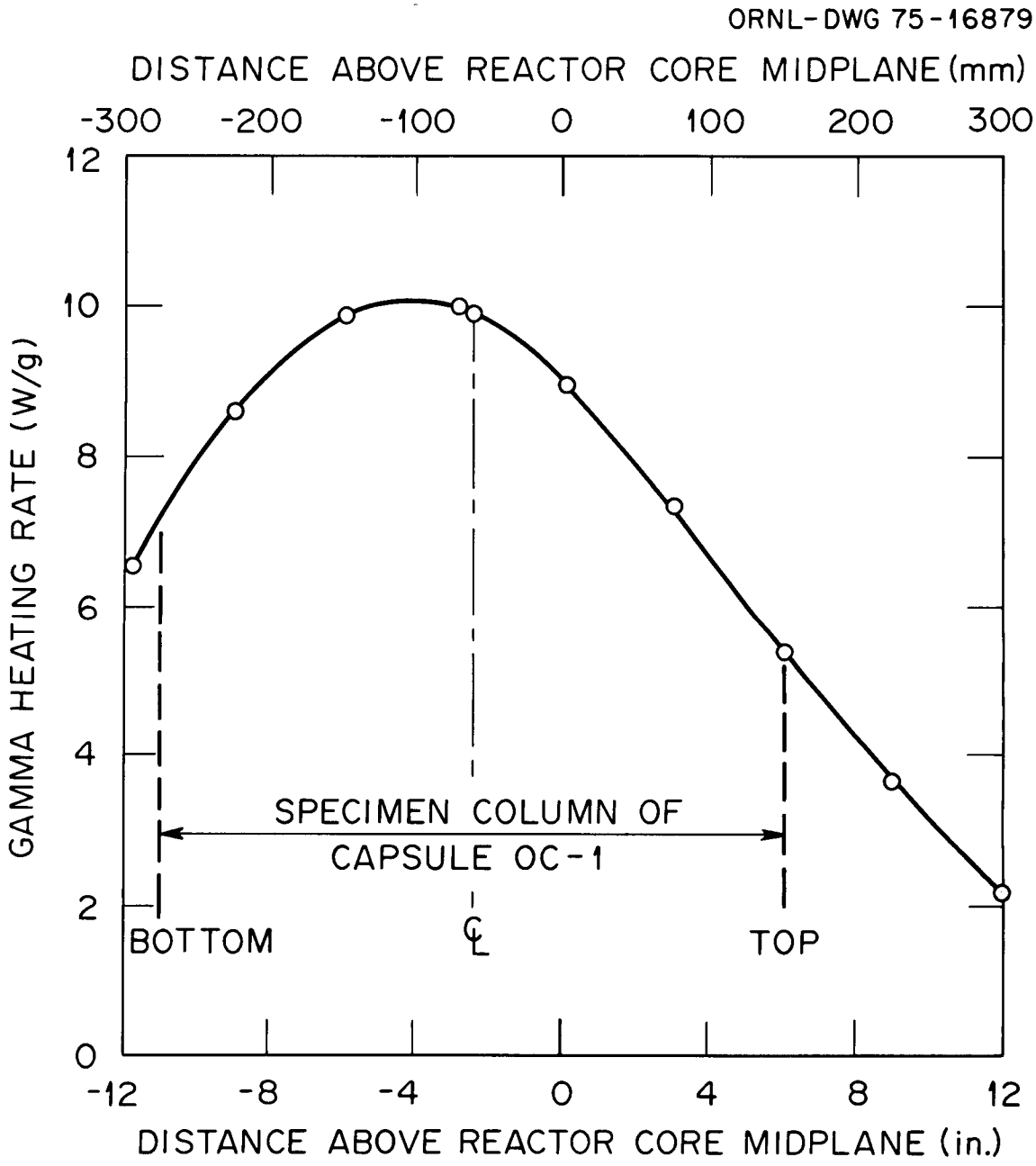

Fig. 11. Results of gamma heating measurements made in the E-5 core facility of the ORR on Sept. 19, 1974.

The HEATING3 program[2] was used for all heat transfer calculations. HEATING3, which is a finite-difference code stored for easy accessibility in the library for computers at ORNL, has been in use at ORNL for several years and has proved satisfactory. It (with appropriate modeling) was

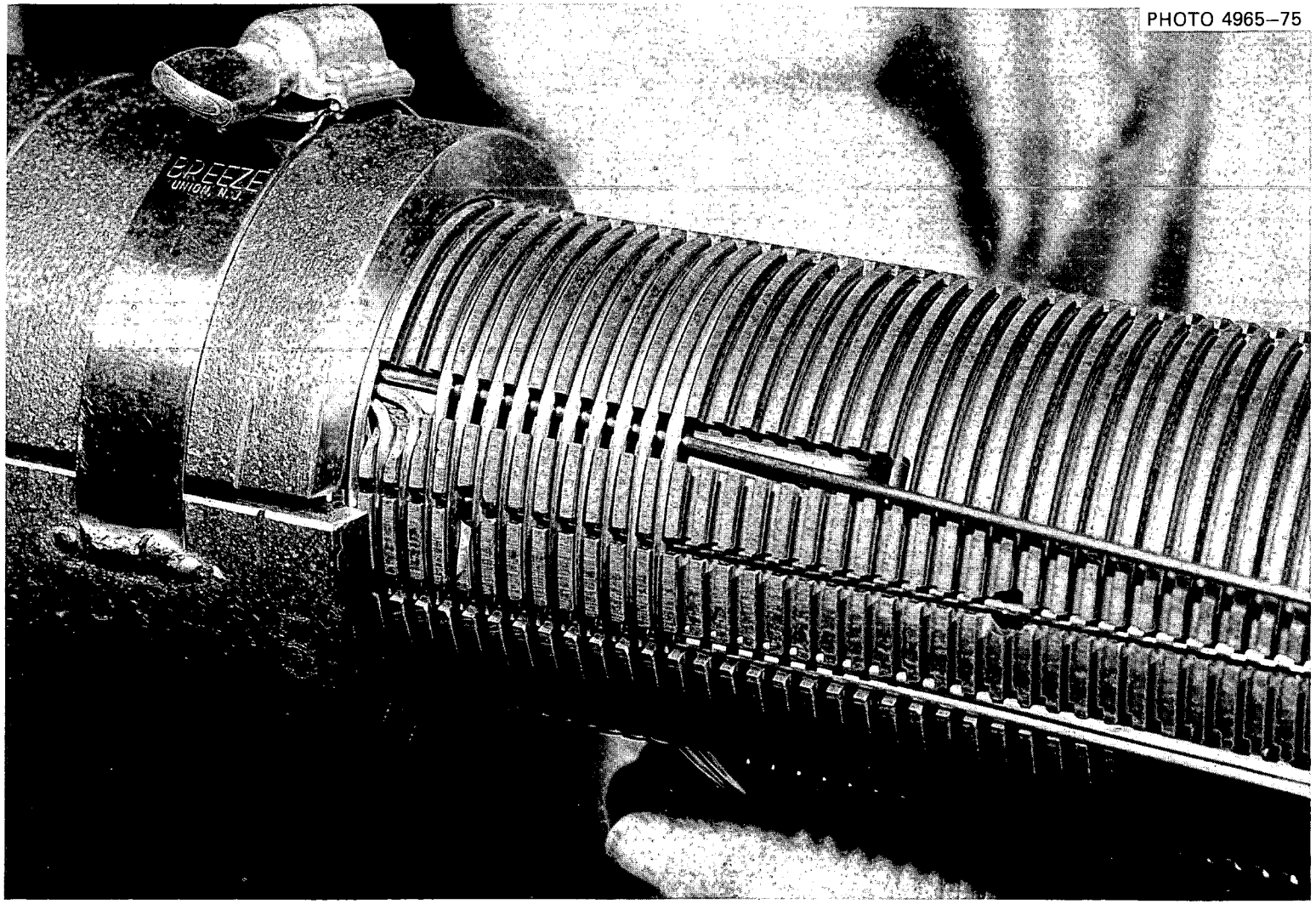

Fig. 12. ORR capsule OC-1 — installation of sheathed heaters on graphite holder.

used to determine the dimensions of the five different radial gaps used in the graphite sleeve to accommodate the variation in the gamma heating rate and to make steady-state, transient, and fine nodal modeling heat-transfer calculations; it was also used in the development of the mathematical relationship for the computer, described below, to calculate the centerline temperatures of the test specimens relative to the outer gas control gap depth in mils (the radial gaps on the outside of the graphite sleeve on the specimen holder), gamma heat related to longitudinal axial position in inches, and heater power in watts per linear inch. Calculations indicated that the greatest heater power requirements for trimming the specimen temperature to the desired 900°C would be for those heaters included in the third zone down from the top. This was expected to be approximately 450 kW/linear meter (11.4 W/linear inch) of heater, less than 23% of the maximum rated power of the heaters.

Computer and Ancillary Equipment

Because of a requirement to maintain a ±10°C temperature control* along the specimen column and the intricate interaction of each heater zone with respect to adjacent heater zones, a computer was acquired to control the experiment temperatures automatically. A Digital Equipment Corporation PDP 11/40 computer with the required ancillary equipment was procured to operate the capsule heaters and to monitor and record the data from the experiment. Algorithms were developed which related the various thermocouple temperatures to the specimen temperatures and thus permitted the computer to adjust the heaters to the required operating levels. Ten solid-state heater control devices (one for each zone) operated under computer control as long as the computer was operating. In the event of loss of signal from the computer, the controller sensed the latest temperature from its control thermocouple and continued to control the heater output to maintain this temperature. As soon as the computer was operating again, it resumed control.

---

*This corresponds to a ±3% change in apparent creep coefficient.

The computer, and its ancillary equipment, presently forms the Oak Ridge Research Reactor Data Acquisition and Control System (ORRDACS) that is installed for the OC series; it will be enlarged for similar operations with other irradiation experiments.

Test Specimen Configurations and Testing Plans

The arrangement of the specimens in the loaded columns of OC-1, the start of the 900°C series of experiments, is outlined in Table 1. As previously stated, the grade of material and positions of each loaded specimen were matched by control specimens in the unloaded columns (see Figs. 3 and 4).

The loading of the specimens in the OC-2 experiment, the start of the 600°C series of experiments, will be like that in OC-1. In the OC-3 experiment, the start of the 1250°C series of experiments, the plan is to use the same type of loading configuration used for OC-1 and -2, except that specimens from grade H-451 graphite will be used in the positions labeled as AXF-8QBG1 in Table 1.

As previously stated, irradiation data have indicated that the primary creep is recoverable if the irradiation creep-tested specimen is exposed in the unloaded condition to fast neutrons at the previous irradiation temperature. Therefore, to acquire the necessary data to calculate the primary creep coefficients, selected specimens will be removed from the loaded columns and reirradiated in an unloaded column of specimens. This will start with the OC-4 experiment, when the set of specimens from OC-1 are reused in OC-4 for their second incremental accumulation of fast fluence. The plan, described in Table 2, involves only specimens of graphite grade H-451 having an intermediate Young's modulus of elasticity. Two of the compressively creeped specimens from the OC-1 experiment are loaded into the unloaded columns of the OC-4 experiment; these are indicated under the heading marked "Primary" in Table 2. The positions that these left vacant in the loaded columns of OC-4 will be filled by new, unirradiated specimens of grade H-451 (or another grade of graphite, if warranted). This technique has the effect of making a small sacrifice in the quantity of specimens that are ultimately available for analyzing for creep coefficients but represents a considerable

Table 1. Configuration of the compressively stressed specimens in columns E and W of capsule OC-1, which operated at 900°C

Position	Grade[a]	Column E			Column W		
		Orientation	Stress[b]	Modulus	Orientation	Stress[b]	Modulus
Top							
1	H-451	Parallel			Parallel		
2	H-327	Parallel			Parallel		
3	H-451	Parallel			Parallel		
4	H-451	Parallel	High		Parallel	High	
5	H-451	Parallel			Parallel		
6	H-451	Parallel		Low	Parallel		Low
7	H-451	Parallel		High	Parallel		High
8	H-451	Parallel		Intermediate	Parallel		Intermediate
9	H-451	Radial			Radial		
10	H-451	Parallel	High		Parallel	High	
11	H-451	Parallel			Parallel		
12	H-451	Parallel	High		Parallel	High	
13	H-327	Radial			Radial		
14	AXF-8QBG1	Isometric	High		Isometric		
Bottom							

[a]The stock for graphite grades H-327 and H-451 is in the form of right circular cylinders. Parallel means that the axis of rotation of the specimen is parallel with that of the stock and with grain; radial means that the axis of rotation of the specimen is parallel with a radius of the stock and across grain.

[b]Blanks indicate a stress of 13.79 MPa (2000 psi); high indicates a stress of 20.68 MPa (3000 psi).

Table 2. Typical plan for the irradiation (at 900°C) of one column section of graphite grade H-451 compressively stressed specimens

Plan				
Capsule No.	OC-1	OC-4	OC-6	OC-8
Fluence, E+25 n/m^2	1	1	2	4
	Number of specimens × fluence			
Low modulus	2 × 1	2 × 2	2 × 4	2 × 8
High modulus	2 × 1	2 × 2	2 × 4	2 × 8
Intermediate modulus	6 × 1	4 × 2	2 × 4	2 × 8
		2 × 1	2 × 3	4 × 4[a]
			2 × 2[a]	2 × 6[a]
Primary		2 × 1	2 × 2	2 × 3

Result	
Number of specimens × fluence	
Secondary creep	Primary Creep
8 × 1[a]	2 × 1
6 × 2[a]	2 × 2
2 × 3	2 × 3
6 × 4[a]	
2 × 6[a]	
2 × 8	

[a]Could use to introduce second graphite type.

savings in that a separate irradiation facility for acquiring the primary creep data is not needed.

Table 2 further illustrates the plan and results anticipated as the OC series of experiments is conducted beyond OC-4 through the desired 12 experiments.

The irradiation schedule for each set of specimens per temperature series involves four capsules that are exposed in turn to accumulate

fluences of approximately 1, 1, 2, and 4 E+25 n/m^2 for the total accumulation of the $\geq$8 E+25 n/m^2. This means that each set of specimens will require 15 months total irradiation time to acquire the desired fluence.

Operation and Initial Results

During irradiation of the OC-1 experiment, started on Apr. 1, 1976, we had difficulty in maintaining the 900 ± 10°C uniform temperature along the length of the specimen columns. There were two major reasons for this. First, the ORR core loading included some partially spent fuel elements, which skewed the flux patterns for the gamma and fast-neutron irradiations. Second, the gamma heating rate failed to bring the specimen temperatures to within the 100°C of the desired operating temperature of 900°C. Consequently, we had to use helium-argon/neon sweep gas instead of just helium in the capsule and to use more heater power than we had originally anticipated in order to bring the specimens to the design temperature.

The instrumentation of the capsule was generally a satisfying part of the experiment for the operational information that it supplied. For example, the two thermocouples that moved up or down through the central axes of the unstressed control specimens proved invaluable in guiding our operations of the controls toward achieving the desired operating conditions. Overall, the ORRDACS, with the computer as its principal component, operated most successfully with data logging, data processing, and control and alarm functions.

Irradiation of capsule OC-1 was completed on May 22, 1976. The capsule was operated at a nominal specimen temprature of 900°C in the ORR E-5 core position for about 34,170 MWhr at 30 MW reactor power for a total peak fluence of about 1.3 E+25 n/m^2. The general operation of the experiment and some of its principal components are summarized and then described in some detail below.

Summary of Results

Capsule OC-1 was successfully irradiated in the ORR E-5 core position for one ORR cycle. The results are given below.

1. The graphite specimens were irradiated for about 1139 hr at 30 MW reactor power and a nominal specimen temperature of 900°C to a peak fluence of 1.3 E+25 n/m^2.

2. Temperatures of the specimens were high and off-design in the upper 16% of the specimen column. In order to maintain the lower part of the specimen column at or near the design temperature, the specimens in upper zones 1 and 2 were permitted to operate at up to about 930°C. Also, the temperature profile along the length of the specimen columns had a small dip approximately one-third of the way down from the tops of the specimen columns throughout the irradiation period. The dip could not be entirely eliminated by sweep-gas mixtures and/or heater power adjustments. Time-integrated temperatures for all specimens will be determined from the data to develop meaningful results.

3. The two movable thermocouple assemblies survived more than 61 and 65 cycles [two 381-mm (15-in.) traverses], respectively, before failing. The failures were apparently mechanical. The traverses cited were entered in the log book during the course of the experiment. Additional traverses were known to have been made, both in pretest operation and during testing for temporary measurements, but were not recorded.

4. Twenty-seven of twenty-eight 1.6-mm-diam (1/16-in.) fixed thermocouples survived the test period. The 24 thermocouples mounted in the graphite specimen holder operated at about 800°C during irradiation.

5. Seventeen of twenty heaters, some of which operated 1.26 kW/linear meter (32 W/linear inch) of heater, survived the test period.

6. The 0.414-MPa (60-psig) gas mixture system used to sweep the capsule and aid in the specimen temperature control and the gas system used to pressurize the bellows used for applying the required loads to the test specimens both operated satisfactorily.

7. Operation of the LVDT load cell transducers was disappointing. The transducers did provide some evidence that the west bellows was probably binding and causing a ratchetting effect as the experiment was heated and cooled during reactor startups and shutdowns. Subsequent thermal expansion of the specimens and spacers at operating temperature in the west column caused a higher than anticipated stress to be applied to these specimens.

8. The computer control and data acquisition system performed very satisfactorily throughout the test. The computer was capable of controlling experiment temperatures to within ±1°C of the desired set points.

The automatic, periodic listing of all experiment parameters being monitored, plus the demand logs of the experiment parameters required by the operators, formed uniquely valuable and essential data bases for the operation and monitoring records of the experiment.

Specimen Temperature Control

As is usual in the first experiment of a new series, some difficulties were experienced in attempting to bring the capsule to design conditions. The helium sweep gas required an addition of approximately 12% by volume of argon to bring the temperatures to the desired range for heater operation. An unanticipated peak temperature along the length of the capsule developed in zones 1 and 2, near the top 16% of the specimen column.* This peak temperature, which worsened as the reactor fuel was burned up and control rods were withdrawn, limited the temperatures that we could achieve in the rest of the specimen columns. These effects were attributed to a "tilt" and shift of the gamma heating profile that was caused by using partially spent reactor fuel elements; therefore, the flux profile was different from that used for the thermal design of the experiment. This was corrected to some degree in subsequent fuel loadings by loading the core with fresh fuel around the experiment. However, after approximately one week of irradiation, the peak near the top of the specimens again became the controlling factor in maintaining the capsule temperatures. By careful analysis of the data accumulated during the OC-1 irradiation, these temperature profile anomalies can be corrected for future experiments in this series by changing the gas gaps and other parameters that affect the specimen temperatures.

There was also a dip in the temperature profile along the length of the capsule approximately in the middle of zone 4,† about one-third down

---

*Defined as that portion of the specimens and their spacers within zones 1 and 2.

†Zones are longitudinal capsule sections, nominally 50 mm (2 in.) long, except for zone 10 [which is 28.6 mm (1 1/8 in.) long], that contain the heater pairs and are numbered 1 through 10 from the top toward the bottom of the capsule.

from the top of the four specimen columns.* Since the temperature peaking in zones 1 and 2 precluded the use of temperature trimming heaters there and inhibited the use of full operating power of the lower heaters, the dip in the temperature profile could not be entirely eliminated during the test period.

As discussed above, there was an unanticipated peak temperature in the top 16% of the specimen columns. This effect worsened because the reactor flux peak shifted toward the top of the experiment as the reactor fuel was burned up and the control rods were withdrawn. In order to keep the upper temperatures within a maximum limit set at 930°C and to maintain control of the temperatures in the lower portions of the capsule, five ORR refueling shutdowns were required during the course of the irradiation.

Further analysis of the temperature increases resulting from the addition of helium and argon vs pure helium sweep gas showed that the effects were as if an ∿30 mole % argon gas concentration had been added to the experiment rather than the ∿12 mole % mixture that was added according to the instrumentation. Analysis of gas samples taken from the exit sweep-gas line verified that we did, indeed, introduce an ∿12 mole % argon gas concentration to the experiment. These results tend to support the theory that some gas separation effect was occurring in the temperature control gas gaps, thus causing zones of higher argon concentration in the capsule and also contributing to the higher than anticipated temperatures in the upper regions of the capsule.

A further test was conducted prior to a refueling shutdown on May 4, 1976. The sweep (control) gas, a helium-argon (88-12%) mixture flowing at approximately 50 cm^3/min, was isolated within the capsule, and the capsule was operated for a few hours as a static system. The results showed an immediate rise in temperatures of the upper zones and slowly increasing temperatures in the lower zones. The test was terminated because the specimen temperatures in zone 2 were exceeding their limits. This test provided further evidence in support of the theory of a gas-separation phenomenon occurring in the capsule gas gaps.

---

*A specimen column is defined here as consisting of the 14 specimens plus the 15 spacers.

Subsequent to the ORR refueling shutdown of May 4, the capsule was operated with a helium-neon sweep-gas mixture. Data were obtained with 100% neon sweep gas and no heater power at 30-MW reactor power. There was still a temperature peak in the upper region of the capsule, but the temperatures along the remainder of the capsule were much closer to the desired constant temperature profile predicted by earlier computations. We were unable to maintain the 100% neon sweep gas except during initial reactor full-power operation before the gamma heat attained its full equilibrium value. Subsequent operation of the experiment was conducted using helium-neon sweep-gas mixtures ranging from 65 to 46 mole % neon. The neon concentration was slowly decreased as the flux profile changed during the course of reactor fuel burnup. Zone 2 specimen temperatures were maintained at about 930°C with the above gas mixtures and no heater power. All zones below zone 2 were maintained at about 900°C specimen temperatures by adding electric heat as required.

Specimen temperatures were maintained by requesting the appropriate graphite temperature set points via the computer control program. These set points were determined by comparing data taken while the movable thermocouples (see below) were operative with the corresponding graphite specimen holder temperatures. The computer-calculated specimen temperatures compared very well with the measured central specimen temperatures except for the anomalous regions in zones 1 and 2 of the capsule.

Movable Thermocouples

Two movable thermocouples, designated as TOON and TOOS, were used to determine the specimen temperatures; each thermocouple traversed 381 mm (15 in.) along holes drilled along the central axes of the control (unstressed) specimen columns. These temperature data were primarily sought (1) to directly monitor the temperatures along the length of the specimen columns and (2) to determine the specimen temperatures for comparison with the calculated temperatures based on the graphite specimen holder temperatures. The latter temperatures were measured with fixed thermocouples mounted in the graphite specimen holder. The movable thermocouples were used frequently to acquire such data. Normally, both movable thermocouples

were used simultaneously whenever a temperature traverse was made. Results from a typical traverse are shown in Fig. 13.

After more than 33 cycles by TOON (Apr. 19, 1976) (a cycle is a full 381-mm traverse in both directions), the thermocouple circuit began to read open between the 208- and 132-mm (8.2- and 5.2-in.) levels above its lowest travel limit. Nevertheless, we continued to obtain useful data both above and below these points until the thermocouple had cycled more than

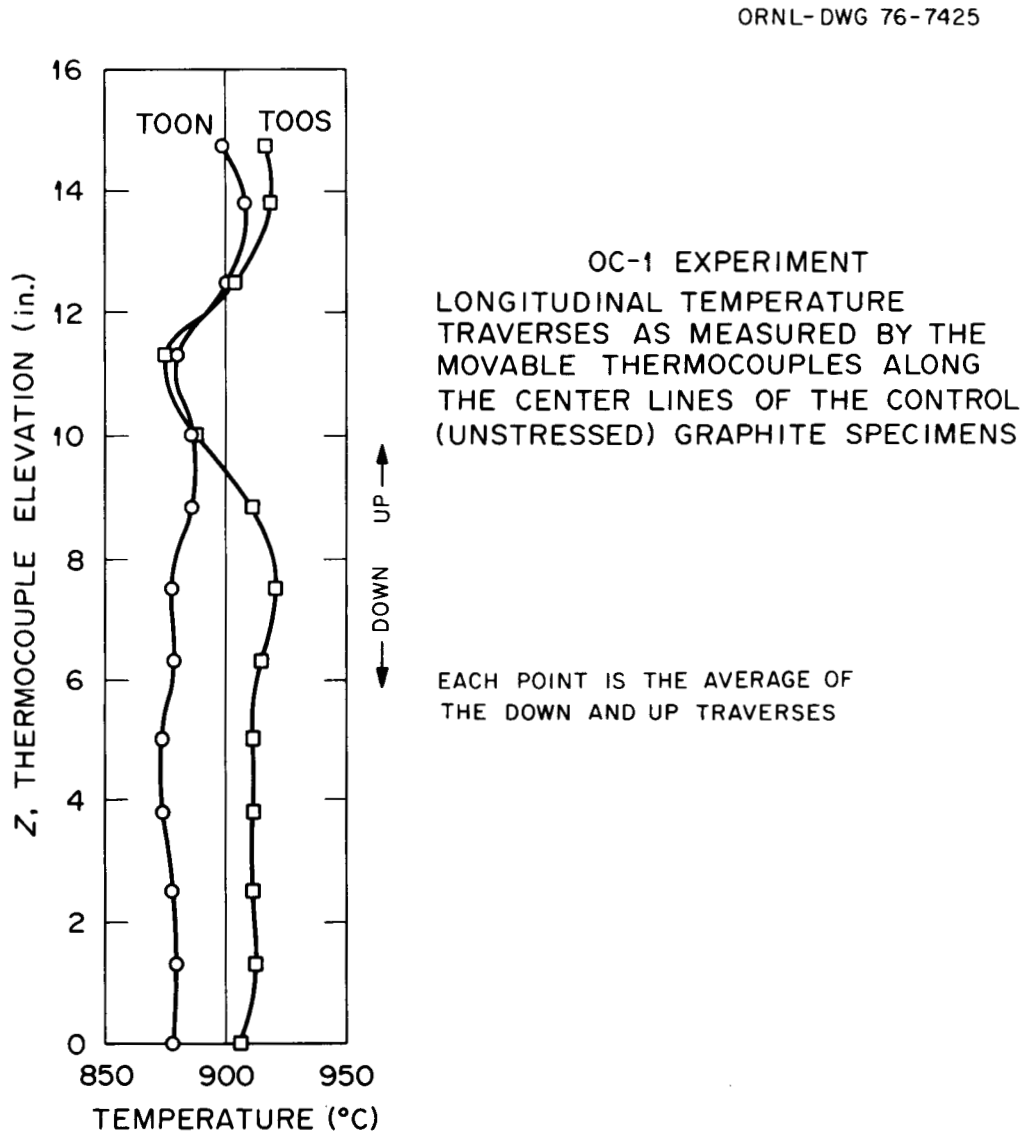

Fig. 13. ORR capsule OC-1 — results from typical movable thermocouple traverse.

61 times. Finally, the TOON drive failed (Apr. 26, 1976) with the thermocouple in the fully down position, 0 mm, where it continued to indicate the temperature in that region.

The south thermocouple, TOOS, operated satisfactorily through more than 53 cycles. At this time (April 19), it began to behave as an open thermocouple circuit below the 127-mm (5-in.) level. This condition worsened after a total accumulation of about 57 cycles, showing an open circuit below the 157.5-mm (6.2-in.) level. Finally, after more than 65 cycles (May 5), the TOOS circuit opened completely and no further temperature measurements could be made. The evidence suggested that the spring-clip-type contacts used as sliding contacts on the gold-plated strip that carried the signal from the thermocouple relaxed in such a fashion as to cause the open thermocouple circuit.

Careful examinations to discover the causes of these failures of the movable thermocouples were made during the postirradiation examination. By the time that both of the movable thermocouples failed, we had acquired sufficient data to make good correlations between specimen temperatures determined by the movable thermocouples and the calculated specimen temperatures based on the temperatures measured in the graphite specimen holder with the fixed thermocouples. Therefore, we could (and did) continue the experiment with confidence that the desired specimen temperatures were being properly maintained.

Fixed Thermocouples

All the 28 fixed (permanently mounted) thermocouples operated satisfactorily throughout the test with the exception of one. Thermocouple TE-T10A, which was positioned in the graphite specimen holder in zone 10, failed as an open circuit on May 14. The mode of failure was probably a separation of the thermocouple wires at the hot junction.

The failed thermocouple was replaced by its companion thermocouple (TE-T10B) as the temperature sensor to its backup controller, and the computer was instructed to ignore T10A in its control calculations.

Heaters

This experiment incorporated 20 sheathed heaters to augment the gamma heating of the capsule and its components so that the specimen temperatures could be trimmed to the desired operating temperatures. Two heaters were mounted and wired in parallel in each of the ten heated zones; for example, zone 1 contained heaters 1A and 1B

The heaters had to be operated at higher power (up to 1.26 kW/linear meter of heater) than originally planned (<0.787 kW/linear meter) because the experiment generally operated at a lower temperature from gamma heating alone than anticipated.

During the experiment three heaters failed: heaters 3B (April 7), 4B (April 12), and 7B (April 14). Since none of the failures occurred in the same zone, we continued to have adequate power in all zones and were able to maintain the experiment temperatures. In these cases, this was as originally intended by placing two heaters wired in parallel in each zone.

The failure in heater 3B appeared to be located at the junction end of the heater where the heater wire was welded to the heater sheath, because the circuit tended to close during a shutdown period while the experiment was cool and to open again as the experiment heated up on return of reactor power.

Near the end of the experiment, we carefully explored the performance of the heaters at higher power ranges. The neon concentration in the sweep gas was deliberately lowered in order to necessitate more heater power to maintain the set-point temperatures. The heaters in zones 4, 7, and 10 were, respectively, operated at 0.787, 1.10, and 1.26 kW/linear meter (20, 28, and 32 W/linear inch) of heater for approximately 48 hr without indication of any incipient problems.

Pressure Systems

The bellows pressure systems used to load the test specimen columns were operated at their design point with less than 1% deviation throughout the test period.

The sweep-gas pressure system, operating at 0.414 MPa (60 psig), was maintained by balancing the inlet and outlet flow of the sweep gas or gases. Manipulation of the various gas mixture concentrations caused minor variations in these pressures, and minor variations of ±0.014 MPa (±2 psig) were noted on heating or cooling the experiment.

LVDT Load Cell Transducers

Operation of the two LVDT load cell transducers was less than satisfactory. The instrument zero point apparently shifted during transportation of the capsule to the reactor site. Attempts to calibrate the devices *in situ* prior to irradiation were largely unsatisfactory. The devices did respond to specimen loading bellows pressure changes, but large hysteresis effects in the load cell transducer responses were noted as the bellows pressures were changed. There was evidence, however, that the west bellows was binding and not contracting to relieve thermal expansion of the specimens and spacers in the column, as would be expected by the design. This ratchetting effect was indicated by an increasing reading on the west column (as compared to the east column) upon raising the experiment to operating temperature, which decayed somewhat over the next few days of operation. Except for these rather gross indications, both LVDT's were erratic and quite temperature sensitive. A different type of load cell will be designed for future experiments in this series.

Computer Operation

The control and data acquisitions by the computer worked very well during the entire experiment. The average temperature measured by two fixed thermocouples mounted in the graphite specimen holder in each zone was controlled by the computer to ±1°C from the requested set point as long as adequate heater power was available to the corresponding zones to permit the computer to maintain the requested temperature as the flux profile changed. As discussed above, these temperatures were also used to calculate the specimen temperatures, which agreed well with those directly measured with the movable thermocouples.

Periodic point logs (PPLs) were automatically taken every hour by the computer during the irradiation period. The PPLs, which are lists of the current values of all experimental parameters being monitored by the computer, formed the data base for the experiment. In addition, demand logs were available to the experiment operator for examination of any of the experiment parameters as required. Both the PPLs and the demand logs provided uniquely valuable and essential data bases for the operation and monitoring records for the experiment.

OC-1 Experiment Postirradiation Examination

The first stage of the postirradiation examination of the graphite creep capsule OC-1 was completed with the retrieval of the test specimens, 28 from the unstressed columns and 28 from the stressed columns. The specimens were intact and have been identified and stored in sample bottles for further examination. The flux monitors were retrieved, identified, and stored for analysis. The lower portion of the two movable thermocouples, the lower portion of the three pairs of heaters, and a pair of thermocouples located in the graphite holder were also saved.

Neutron radiographs of the capsule were taken at 0 and 90° at two elevations, thus providing coverage of the capsule. The radiographs were closely examined prior to cutting the capsule open to determine if changes had occurred during irradiation as compared to radiographs taken prior to irradiation. No obvious defects were noted. There was a space between specimens in one of the unloaded columns, which indicated that the uppermost specimens in the column had moved up approximately 12.7 mm during retraction of one of the movable thermocouples, but this should have no significant effect on the test results. We also noted that the bellows were extended from their original position (which was to be expected). However, one was extended slightly farther than the other, indicating that the stack heights of the two stressed columns had changed differently or that one of the bellows was wedged and could not return to its fully compressed state.

The experiment lead tube just above the capsule proper in the ORR hot cell was cut off, and the capsule was removed to a clean hot cell for

further work in order to prevent undue contamination of the specimens. The first cut was made approximately 25.4 mm below weld 2 (DWG M-11632-EM-006-E) just below the bellows region, thus exposing the bottom side of the bellows. The interior of the region was bright and clean. By carefully pushing on each bellows, we found that they were free to move within the copper chill block surrounding them. The bellows were removed from the assembly and examined. They were clean and without visable defects. Examination of the interior of the holes in the copper block that served as guides for the bellows revealed burnish marks where the bottom plate on the bellows assembly moved against the wall of the closely fitted copper block, but there were no obvious indentations or scores which might indicate that the bellows was askew and bound within the copper. Photographs were taken at each stage of this examination and throughout the disassembly of the capsule.

The lower portions of the two movable thermocouples were removed without difficulty and stored for further examination.

A second cut was made through the capsule just below the bottom end of the graphite specimen holder, thus exposing the bottom end of the specimen columns and the top of the region holding the load cells. The stainless steel outer can was removed, exposing the graphite sleeve surrounding the heaters and the graphite specimen holder. The sleeve was carefully examined and photographed in an effort to determine if there had been any cracking or discontinuity that might explain the anomalous temperature behavior described previously during operation of the experiment. No defects were seen, and the sleeve appeared much the same as it did at installation.

The alumina insulators were removed from the bottom of the unstressed columns, and these columns of specimens were pushed out of the graphite sleeve into a "V" tray, examined, and stored in bottles labeled with the appropriate column identification and numbered 1 through 14 from the top to the bottom. Both unstressed columns were easily pushed out of the holder by inserting a 12.7-mm-diam rod from the top.

Attempts to remove the stressed specimens in a similar manner were unsuccessful. The specimens were more tightly bound in the column, probably because the graphite spacers between each specimen had expanded.

During irradiation, the spacers were under such stress that the spacing lugs on the spacers would creep out against the inside diameter of the hole in the graphite sleeve. There was a 0.0254-mm (1-mil) diametral clearance between the spacer lugs and the inside diameter of the holes originally. The specimens were ultimately removed by tapping the push rod, which was bearing against the uppermost spacer, with a 0.454-kg (1-lb) hammer using approximately a 152-mm (6-in.) stroke. This permitted a slight movement of the column of samples with each hammer stroke. Subsequent close examination of the spacers in these columns and the inside of the holes in the graphite sleeve revealed a burnishing effect on the outside of the spacer lugs and similar burnishing of the inside diameter of the hole in the graphite where the spacers were forced as they were removed. There was no chipping and breaking of the lugs and no obvious detents along the inside surface of the holes, which would have indicated a more severe interlocking of the spacers within the hole that might have interfered with the application of the loading stress from the bellows. We were unable to measure the amount of force required to remove the specimens in the hot cell, but from the evidence available so far, it appears that the spacers within the holes may have interfered somewhat with the loading applied by the bellows assembly on one stressed column.

As described above, the stressed specimens were moved out of the graphite holder into a "V" tray, examined, and stored in bottles with appropriate column identification and numbered 1 through 14 from the top to the bottom. All specimens appeared to be intact and clean.

After the specimens were removed from the graphite holder subassembly, the graphite sleeve surrounding the heaters was removed. This piece was very close fitting during assembly and had to be forced in place. However, after irradiation, it could not be slipped off the heaters and had to be removed by cracking with a screwdriver blade and hammer. The heaters were found to be in about the same condition as when initially installed. Heater pairs 3A and B, 4A and B, and 7A and B, each of which included one of the three heaters that failed during testing, were removed and saved for later inspection. The thermocouples that were removed from their grooves in the graphite holder also had the same clean appearance as when

installed. Thermocouples 10A and B were saved for future examination as discussed below.

Finally, the flux monitors were removed from their positions inside the thermocouple grooves, identified, and loaded into sample bottles. Induced radiation from the flux monitors ranged from 0.035 Gy at 50 mm (3.5 R at 2 in.) to 3 mGy at 0.305 m (300 mR at 1 ft) for those near the top of the capsule to a maximum of 0.1 Gy at 50 mm (10 R at 2 in.) to 0.01 Gy at 0.305 m (1 R at 1 ft) for those near the midplane. The monitors, which are composed of various wire materials, were contained in a 25.4-mm-long (1-in.) segment of 1.6-mm-diam stainless steel tubing.

The induced activity of the test specimens was found to range from 0.5 to 0.8 mGy (50 to 80 mR) at 50 mm through the sample bottles. These samples have been sent to the Metals and Ceramics Division laboratory for detailed dimensional analysis to determine the creep characteristics of the various graphites included in the OC-1 irradiation experiment. These results will be reported separately.

As discussed above, the lower ends of the two movable thermocouples, one pair of graphite thermocouples (TE-10A and -10B), and three pairs of heaters (3A and B, 4A and B, and 7A and B) were saved for further examination. Both movable thermocouples, one of the graphite thermocouples, and one of each pair of heaters failed during experiment operation. Continuity tests were made to determine which of the pairs failed and to locate the discontinuity, if possible.

With regard to the movable thermocouples, the test showed that the south thermocouple (TOOS) was open, probably at the junction. The measurements showed 6 MΩ resistance across the leads and 3.3 MΩ from each wire to the sheath. The north thermocouple (TOON), which was intact, measured 1.5 Ω resistance across the leads and 3.4 MΩ from each wire to the sheath. Since all thermocouples in the experiment were built with ungrounded junctions, the wire-to-wire measurement should show a low resistance and the wire-to-sheath measurement a high resistance. These tests confirmed our previous indications that the north thermocouple failed because of a malfunction of the spring clip—slide wire assembly at the upper end of the thermocouple and that the south thermocouple failed at the welded junction on the sensing end of the thermocouple.

As expected, one of the graphite thermocouples from the TE-10 pair (TE-10A) was failed, probably at the welded junction. Measurements showed 1.6 MΩ resistance across the leads and 1.6 MΩ from each wire to sheath.

The three failed heaters were identified with the following measurements: heater 3B measured 33.6 Ω resistance wire to sheath; 4B measured 6.5 MΩ; and 7B measured 1.3 MΩ. These measurements corroborated our experience during experiment operation in that heater 3B tended to "close" during a shutdown period while the experiment was cool and to "open" again on return to reactor power. This suggests that the heater wire to sheath weld at the end of the heater was cracked such that thermal expansion of the materials would cause electrical discontinuity, as evidenced by the relatively high resistance of 33.6 Ω compared to 6.94 Ω resistance measured on heater 3A. On the other hand, heaters 4B and 7B failed completely and did not "remake" during operation. As one would expect, a completely open circuit as shown by very high resistance was measured on these two heaters.

Because of the nature of the failures in 4B and 7B, we suspect that the faults could have been at either the junction of copper lead wire and heater lead wire just at the beginning of the heated section or at the heater wire to sheath closure weld. Further testing, including metallographic samples, will be conducted on these samples in an attempt to completely identify the cause of the failures. If we can determine the location of these faults and compare the results with preirradiation radiographs and measurements made during experiment assembly, we may be able to reduce the possibility of heater failures in subsequent experiments.

APPLICATIONS AND FUTURE PLANS

Beyond storage of archival samples, no provision is being made to determine primary creep and secondary creep under tension. A decision to do additional experiments toward the measurements of these coefficients depends upon the degree of accuracy and precision obtained in these compression experiments, the quality and applicability of the tension creep determinations currently being made in Europe, and the criticality of the values for core stresses and analyses.

As indicated, these experiments are primarily and currently directed toward the immediate needs of operational HTGRs and those that are being designed. With the design of this series of tests and with the material selected for testing, the data generated should also be useful to other reactor designs such as the molten-salt (breeder) and the controlled thermonuclear (fusion) reactors.

ACKNOWLEDGMENTS

The authors are indebted to a number of people for assisting in the design, fabrication, and operation of the experiment and in the preparation of this report: J. M. Jansen, Jr., and J. A. McEvers, Instrumentation and Controls Division, for procurement and assembly of the computer hardware plus the development of the software and scan routines; J. W. Cunningham, Instrumentation and Controls Division, for the development, procurement, and installation of the circuits and instrumentation for monitoring and controlling the experiment; H. C. Roland, consultant from the University of Tennessee, for the calculations of the heat-flow relationships in the experiment; K. R. Thoms, Engineering Technology Division, for making the gamma scan of the ORR E-5 irradiation facility; J. E. Corum, Experimental Engineering, Engineering Division, for assisting in the design and preparation of working drawings; C. A. Wallace, Engineering Technology Division, and R. T. Guice and W. T. Coward, Y-12 Plant Maintenance Department, for constructing the capsule; W. K. R. Finnell, Engineering Technology Division, for the maintenance and operation of the experiment; and the Graphic Arts Department for preparing the drawings.

REFERENCES

1. R. J. Price, *Review of Irradiation-Induced Creep in Graphite Under HTGR Conditions*, GA-A12332 (Nov. 1, 1972).
2. W. D. Turner and M. Siman-tov, *HEATING3 — An IBM Heat Conduction Program*, ORNL-TM-3208 (February 1971).

ORNL/TM-5798
Dist. Category UC-77

INTERNAL DISTRIBUTION

1. E. J. Allen
2. J. L. Anderson
3. S. Baron
4. R. L. Beatty
5. M. Bender
6. J. P. Callahan
7–11. J. A. Conlin
12. W. E. Cooper
13. J. E. Corum
14. F. L. Culler
15. J. W. Cunningham
16. F. C. Davis
17. J. R. DiStefano
18–27. W. P. Eatherly
28. G. G. Fee
29. Uri Gat
30. M. J. Goglia
31. A. G. Grindell
32. W. S. Groenier
33. W. R. Hamel
34. F. E. Harrington
35. J. F. Harvey
36. C. C. Haws
37. L. C. Hensley
38. F. J. Homan
39. J. M. Jansen
40. J. D. Jenkins
41. D. R. Johnson
42. M. A. Karnitz
43–45. P. R. Kasten
46. C. R. Kennedy
47. W. J. Lackey
48. M. Levenson
49. K. H. Lin
50. T. B. Lindemer
51. E. L. Long, Jr.
52. A. L. Lotts
53. R. E. MacPherson
54. A. P. Malinauskas
55. W. R. Martin
56. J. A. McEvers
57. J. R. McIntosh
58. J. Mincey
59. K. J. Notz
60. A. R. Olsen
61. H. Postma
62. D. P. Reid
63. H. C. Roland
64. A. D. Ryon
65. D. Scott
66–70. R. L. Senn
71. M. R. Sheldon
72. R. L. Shepard
73. J. W. Snider
74. P. E. Stein
75. R. S. Stone
76. K. R. Thoms
77. D. B. Trauger
78. V. C. A. Vaughen
79. J. R. Weir
80. R. P. Wichner
81. W. J. Wilcox
82. ORNL Patent Office
83–84. Central Research Library
85. Document Reference Section
86–88. Laboratory Records Department
89. Laboratory Records, ORNL RC

EXTERNAL DISTRIBUTION

90–91. Director, Division of Nuclear Research and Application, Energy Research and Development Administration, Washington, D.C. 20545
92. J. D. Radcliffe, ERDA Office of Program Management, Research and Space Programs, P.O. Box 81325, San Diego, Calif. 92138
93. C. E. Williams, Manager, ERDA Idaho Operations Office, P.O. Box 2108, Idaho Falls, Idaho 83401

94. Barry Smith, ERDA Idaho Operations Office, P.O. Box 2108, Idaho Falls, Idaho 83401
95. R. D. Thorne, Manager, ERDA San Francisco Operations Office, 1333 Broadway, Wells Fargo Bldg., Oakland, Calif. 94612
96. Director, Reactor Division, ERDA, ORO
97. Research and Technical Support Division, ERDA, ORO

98–274. For distribution as shown in TID-4500 under category UC-77 (Gas Cooled Reactor Technology)

☆ U.S. GOVERNMENT PRINTING OFFICE: 1977-748-189/49