MAGNETIC FIELD MEASURING SYSTEM FOR REMAPPING THE ~~ORIC MAGNETIC~~ FIELD

By acceptance of this article, the publisher or recipient acknowledges the U.S. Government's right to retain a nonexclusive, royalty-free license in and to any copyright covering the article

S.W. Mosko, E.D. Hudson, R.S. Lord, D.C. Hensley, and J.A. Biggerstaff
Oak Ridge National Laboratory,* Oak Ridge, Tennessee 37830

CONF-770313--88

Abstract

The Holifield Heavy Ion Research Facility will integrate a new 25 MV tandem electrostatic accelerator into the existing cyclotron laboratory which includes the Oak Ridge Isochronous Cyclotron (ORIC).[1] Computations of ion paths for beam injection from the new tandem into ORIC require field mapping in the regions traversed by the beam. Additional field data is also desired for the higher levels (~19 kG) now used for most heavy ion beams. The magnetic field measurement system uses 39 flip coil/current integrator sets with computer controlled data scanning. The coils are spaced radially at 1 inch intervals in an arm which can be rotated azimuthally in 2 degree increments. The entire flip coil assembly can be shifted to larger radii to measure fields beyond the pole boundary. Temperature stabilization of electronic circuitry permits a measurement resolution of ±1 gauss over a dynamic range of ±25,000 gauss. The system will process a scan of 8000 points in about one hour.

Introduction

The magnetic field of the Oak Ridge Isochronous Cyclotron, ORIC, was mapped[2] some 15 years ago when the cyclotron was under construction. The addition of the Holifield Heavy Ion Research Facility's (HHIRF) 25 MV electrostatic accelerator as an injector has made remapping highly desirable. The original measurements did not cover the fringe field regions which will be traversed by the injected beam, and they were limited to field intensity levels below those which are now used routinely. The new field data will be used for trim coil current prediction and for injection/acceleration/extraction orbit and trajectory studies. The field mapping program began early in February 1977 and was completed in mid-March. This schedule was arranged to coincide with installation of the beam injection equipment and related RF system modifications.[3]

The field measurements were accomplished with a multiprobe system featuring 39 flip coil/current integrator sets, high speed data scanning and conversion, computer control, and computer recording and processing of field measurement data.

The Mapping System

Choice of Probes

In order to minimize the loss of cyclotron experiment time, a multiple probe system was considered essential. For convenience the number of probes was set at 39 to permit simultaneous measurement along a radial line with the probes spaced at 1 inch (2.54 cm) intervals between the magnet center and the pole face outer radius of 38 inches (96.52 cm).

Flip coils were chosen over Hall probes on the basis of accuracy, speed, reliability, cost, and simplicity. Hall probes have served well in previous measurements, and flip coils were subject to some serious shortcomings in the past. However, the present state of the art in solid state operational amplifiers permits the use of low cost integrator circuits which are quite stable and reliable. Flip coils are linear devices requiring calibration at only one field level, and the flip coil/integrator signal level can be at least an order of magnitude larger than that for Hall probes.

The Coils

The flip coils are wound on anodized aluminum forms and have an overall diameter of 0.525 in (1.33 cm) and a length of 0.378 in (0.96 cm) which results in a length/diameter ratio of 0.72. Each coil contains 2500 turns of AWG 36 enameled wire and has an effective area of 1400 sq cm. The radial displacement of the magnetic axis of each coil with respect to its geometric axis (the coil form axis) was measured by rotating the coil about its geometric axis in a gradient magnetic field. Displacements ranging from 1 to 6 mils (25 to 150 μm) were observed with an average value of about 3 mils (75 μm). All 39 flip coils are mounted in a positioner shaft (probe arm) which flips all coils simultaneously about the shaft axis. The coils are oriented so that their radial magnetic axis displacements are perpendicular to the axis of probe arm rotation. Thus for any field with only first order derivatives, the radial displacement error in each coil is cancelled when the coil is flipped.

Coil Temperature Effects

The area of each coil increases with temperature at a rate proportional to twice the linear coefficient of expansion of the conductor material. However, the integrator output decreases with increasing coil resistance. It should be possible (in principle at least) to design a coil/integrator combination with proper choice of coil conductor length and resistance where the two temperature effects cancel each other. On the ORIC flip coils, the area temperature coefficient is dominant and the resultant measured field error is 3.5 parts in 10^5 per degree C. Consequently the flip coil shaft temperature is constantly monitored so that appropriate corrections may be applied.

The Integrators

Each flip coil is connected to its own exclusive integrator (Fig. 1) for signal storage. The integrators are mounted in groups of four in NIM modules with exclusive IC voltage regulators for each integrator. The integrators are derived from the Analog Device 234L amplifier with a 1 μF polystyrene feedback capacitor and a nominal 70k ohm input resistor. Each module has a 4-pole shorting relay for discharging the integrators. The integrator output signals are found from[4]

$$V_o = \frac{G}{G+1}\,\frac{1}{RC}\int V_c\,dt, \text{ and}$$

$$V_c = -\,(\text{coil area})\left(\frac{d\phi}{dt}\right)(10^{-8}) \text{ volts.}$$

Using values of $G = 10^7$, $R = 70\ k\Omega$, $C = 1\ \mu F$, a sensitivity factor of 0.2 mV/gauss is calculated. This sensitivity was especially selected for obtaining a full-scale reading for a nominal ±26 kG magnetic field on an ADC with a dynamic range of ±10 volts. The resistance was adjusted by up to ±10kΩ to obtain nearly uniform sensitivity for each of the 39 coils whose area and feedback capacitors were subject to variations of about ±10%. The integrator configuration with the above parameters has a time constant equal to GRC of 700,000 seconds.

*Operated by Union Carbide Corp. for U.S. ERDA.

MASTER

DISTRIBUTION OF THIS DOCUMENT IS UNLIMITED

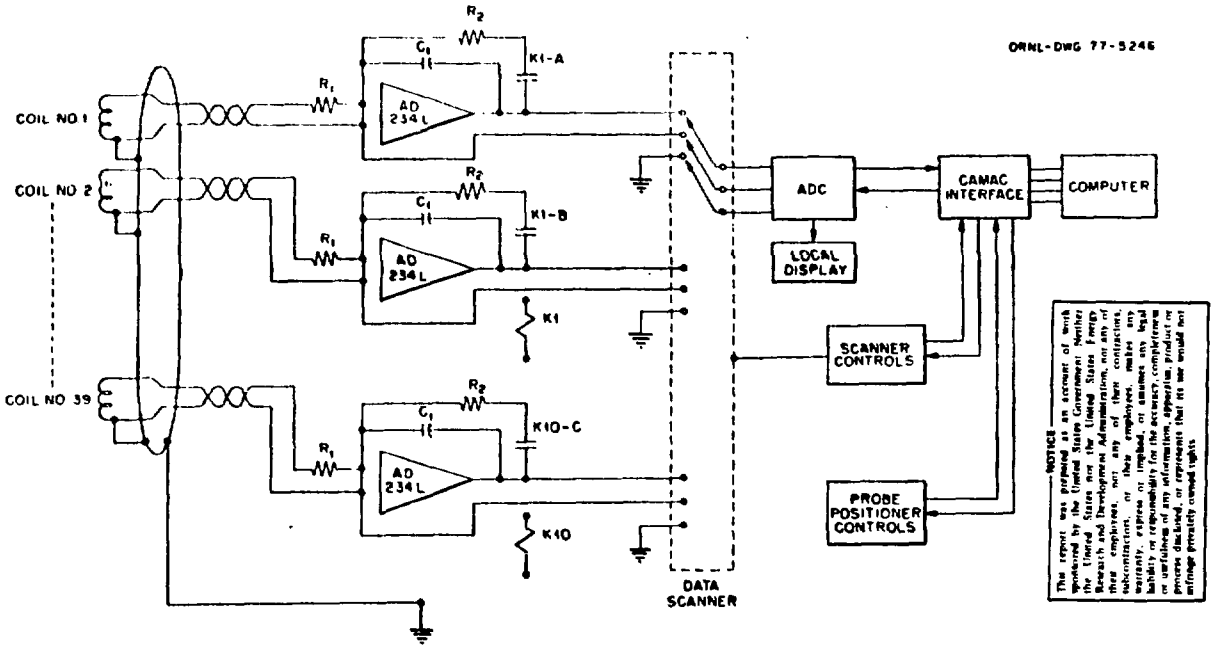

Fig. 1. A simplified schematic diagram of the flip coils with their respective integrators and the data acquisition system.

Data Scanner and ADC

The 39 integrators are scanned by a multichannel scanner and read by a 16 bit ADC. The scanner is a Monitor Labs unit featuring TTL compatible controls with reed relay channel switching. Unlike conventional reed switches, the reed relays contain closed magnetic circuits which are relatively immune to ambient magnetic fields. The scanner requires approximately 5 msec per channel for setup time.

The ADC is an Analog Devices Model ADC-16Q. It is a successive approximation type converter with a settling time (for the input amplifier) of about 4 msec and a data conversion time of 400 μsec (for 16 bit resolution). The dynamic range is ±10 volts.

Temperature Stabilization

The integrating capacitors and the amplifier offset currents are both temperature sensitive. The capacitors with a nominal 100 parts in 10^6 temperature coefficient can cause substantial calibration errors while varying offset currents cause the integrators to drift during the data acquisition process. Consequently, the entire NIM bin containing 10 integrator modules is temperature controlled with a proportional heater. Typical integrator offset drift rates are about 1 gauss in 20 sec.

Probe Positioner

The probe positioner design is based on an 80 inch diameter aluminum gear (Fig. 2) which was built for ORIC's original field measurements in which a single Hall probe was used. The 39 flip coils are mounted on a single radial shaft which in turn is mounted on a machine slide so that the probe arm can be shifted to a radius 38 inches beyond the pole edge to measure the fringe field. The coils are spaced at 1 inch increments. Azimuthal positioning of the wheel is accurate to approximately ± 8 second of arc (± 0.0015 in. at 40 inch radius). This is equivalent to an error of less than 1 gauss due to azimuthal position error in the highest gradients. Preliminary azimuthal positioning is done with an 18 tooth driving gear which engages the outer portion of the teeth on the main gear; and final positioning is achieved by locking the 80 inch gear in place with a rotating wedge. The locking mechanism is constructed so that the precision surfaces of both the wedge and the gear teeth have essentially no sliding contact, and thus minimum wear. The flip coils are rotated by a rack and pinion gear. All probe positioner motions are air actuated except the probe arm radial extension which is manually adjusted.

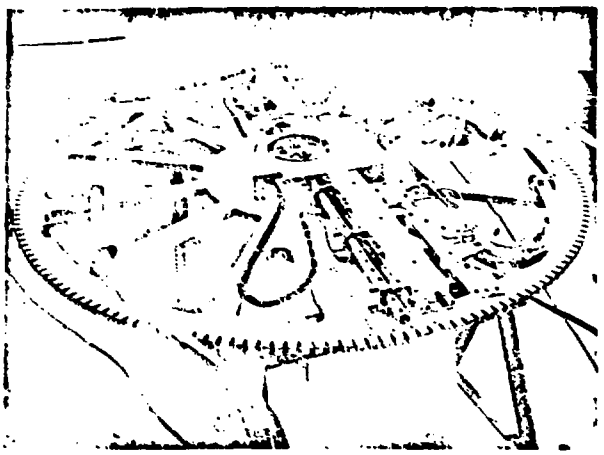

Fig. 2. The probe wheel. The aluminum probe arm can be seen in lower center area. Mounting holes for the slip coils are accessible from alternate sides of the arm. The signal cable carrying a twisted pair of leads from each coil can be seen in its guides near the periphery of the wheel.

Control System and Programming

The field mapping system is controlled by an SEL 840A computer via a CAMAC serial highway link between the remotely located computer and the cyclotron vault. A Triac module is used to switch 120V ac power for actuating air valve solenoids to flip the coils. Wheel motion is initiated by a logic level from the CAMAC interface and then controlled by an array of relays and limit switches. The TTL input and output registers in the CAMAC system transmit setup data from the computer to the Monitor Labs scanner, field data from the ADC to the computer, and component status data to the computer. There is a communications link between the master CAMAC crate and the ORIC's control computer from which field excitation data is obtained. Finally, there is a teletype in the cyclotron vault which is driven by the master CAMAC crate. This teletype was important in the early de-bugging of the system and is now used to provide error messages and a running log of the field mapping.

A typical positioning and data acquisition sequence is illustrated in Table 1. The computer initiates each event and monitors status signals to determine when it is time to advance to the next event. Appropriate delays are included in the program to allow time for eddy current decay.

The computer takes the difference between the resulting positive and negative ADC readings for each flip coil thereby cancelling offset errors in the integrators and in the ADC. The sum of the positive and negative flip coil readings is also taken as an indicator of system performance. Readings of analog position indicators and probe arm thermocouples are recorded at each azimuth.

Table 1. Basic Field Scanning Sequence.

Event	Time Required
Discharge integrators	1 sec
Probe arm rotation (+180°) (rotation rate is field dependent)	3-10 sec
Integrator interrogation via scanner and ADC	1 sec
Discharge integrators	1 sec
Probe arm rotation (180°)	3-10 sec
Integrator interrogation via scanner and ADC	1 sec
Wheel advance by 2° increment	3 sec
Repeat 180 times for a complete 360° scan	1½ hours

The computer control system has made it possible to provide a wide variety of optional modes of operation. For example, the timing of various parts of the cycle can be readily changed, or the coils can be used as search coils to speed up data taking, or a combination of search and flip mode may be used as shown in Table 2. The computer has also been programmed to measure and record various other quantities such as the time required for flipping the coils and the residual charge on the integrating capacitors after discharge. If abnormal conditions are detected appropriate action can be taken, automatically if desired.

Table 2. Modified Field Scanning Sequence for Fast Scanning.

Event	Time Required
Discharge integrators	1 sec
Probe arm rotation (+180°)	3-10 sec
Integrator interrogation	1 sec
Discharge integrators	1 sec
Probe arm rotation (180°)	3-10 sec
Integrator interrogation	1 sec
Wheel advance by 2° increment	3 sec
Integrator interrogation	1 sec
Wheel advance by 2° increment	3 sec
Integrator interrogation	1 sec
Wheel advance by 2° increment	3 sec
Repeat 45 times for a complete 360° scan	1/2 hour

Conclusions

ORIC's magnetic field was mapped during February and March 1977 at 15 main field excitation levels ranging from 260 amps to 5000 amps (B_0=4KG to B_0=20KG). For each of these levels, the effects of each of 10 circular trim coil pairs, 3 harmonic coil sets, and valley coils were measured. Approximately 4 million data points were acquired. Preliminary analysis indicates that the data is accurate to about ± 1 pp 10,000 or better. The measurement system has been highly reliable having only minor hardware problems. The flexibility of the computer control system has been especially useful. The computer was reprogrammed on several occasions in order to acquire unanticipated diagnostic data and to modify the measurement-data recording sequence so as to minimize the total scanning time.

Acknowledgements

Many people provided vital assistance in designing assembling, and operating the field measurement system. R. M. Beckers and D. L. Haynes designed the probe arm and actuator. F. Irwin was responsible for equipment assembly, calibration, and flip coil alignment. G. S. McNeilly, K. N. Fischer, L. B. Maddox, and B. J. Casstevens provided the computer programming required for processing the field measurement data. M. B. Marshall designed the probe positioner control logic. C. A. Ludemann interfaced the data acquisition computer with ORIC's control computer. J. W. McConnell provided the CAMAC - SEL 840A interface. C. L. Viar, H. L. Dickerson, H. D. Hackler, C. L. Haley, N. Lane, and G. A. Palmer were responsible for operating the equipment.

References

1. R. S. Lord et al., Trans. Nucl. Sci. NS-22, No. 3 (1975) 1679-1681.

2. E. D. Hudson et al., Achievement and Measurement of the ORIC Magnetic Field, Nucl. Instr. and Meth. 18,19 (1962) 159-169.

3. S. W. Mosko et al., ORIC RF System - Preparation for HHIRF, proceedings of this conference.

4. P. G. Watson and R. F. DiGregoria, Techniques of Magnetic-Field Measurement, Proceedings of the International Symposium on Magnet Technology, 1965, 393-406.