PFHA-2

By acceptance of this article, the publisher or recipient acknowledges the U.S. Government's right to retain a nonexclusive, royalty-free license in and to any copyright covering the article.

DISCLAIMER

This book was prepared as an account of work sponsored by an agency of the United States Government. Neither the United States Government nor any agency thereof, nor any of their employees, makes any warranty, express or implied, or assumes any legal liability or responsibility for the accuracy, completeness, or usefulness of any information, apparatus, product, or process disclosed, or represents that its use would not infringe privately owned rights. Reference herein to any specific commercial product, process, or service by trade name, trademark, manufacturer, or otherwise, does not necessarily constitute or imply its endorsement, recommendation, or favoring by the United States Government or any agency thereof. The views and opinions of authors expressed herein do not necessarily state or reflect those of the United States Government or any agency thereof.

ETF REACTOR DESIGN STATUS*

CONF-810637--21

P. H. Sager

General Atomic Company
Manager, Nuclear Systems Branch, ETF Design Center
Oak Ridge National Laboratory
Oak Ridge, Tennessee 37830

MASTER

Conceptual design studies of a tokamak Engineering Test Facility (ETF) are being carried out as a joint laboratory-industry effort at the ETF Design Center at Oak Ridge National Laboratory (ORNL). Designs are being developed for two reactors, one with a bundle divertor and one with a poloidal divertor. These machines, which are designed for ignition and a burn time of 100 s, both have a major radius of 5.4 m, a plasma minor radius of 1.3 m, and a D-shaped plasma elongation of 1.6. The plasma chamber must be conditioned at 10^{-7} torr. During the 35-s dwell between burns, the chamber must be pumped down from 5×10^{-3} torr to 3×10^{-5} torr. In the design with the bundle divertor four pairs of compound cryopumps, each pump with a 2-m^2 cryosorption pumping surface, are installed to pump down the plasma chamber. In the design with the poloidal divertor the plasma chamber is evacuated with the ten pairs of compound cryopumps, each pump with a cryosorption pumping surface of 4.32 m^2, installed to handle the divertor load. In both cases the pumps are installed in pairs so that one set can be regenerated while the other set is on-line.

*Research sponsored by the Office of Fusion Energy, U.S. Department of Energy, under contract W-7405-eng-26 with the Union Carbide Corporation.

DISTRIBUTION OF THIS DOCUMENT IS UNLIMITED

I. INTRODUCTION

In 1974 a series of design studies was initiated under the sponsorship of the U.S. Department of Energy (DOE) and the Electric Power Research Institute to develop the design of the next major tokamak fusion reactor beyond the Tokamak Fusion Test Reactor (TFTR). The TFTR, which is being constructed at Princeton Plasma Physics Laboratory, will be the first fusion reactor to demonstrate the scientific feasibility of fusion power.

At the time the initial studies were carried out, the objectives of the next major device were not well defined, nor were the cost implications of some of the potential objectives understood. In the initial studies[1-3] designs for an experimental power reactor were developed. It was generally concluded that the construction of such a device would be too ambitious given the cost and uncertainties in both the physics and technology areas.

In 1976 the effort was reoriented to investigate a more modest device as part of The Next Step (TNS) program. Designs of a number of machines, centering around the Ignition Test Reactor (ITR), were developed.[4-7] Although the basic concepts in several of these studies addressed the need for a more advanced machine in terms of plasma physics parameters and although the design generated in one of the studies addressed the technology issues, none of them adequately reflected the need for a device that addressed both sets of issues.

In September 1978 DOE issued a policy statement for fusion energy,[8] outlining a strategy to develop fusion energy as an economically

attractive and environmentally acceptable energy option. This strategy involves three phases: scientific feasibility, engineering testing, and reactor demonstration.

It is anticipated that scientific feasibility will be demonstrated with the TFTR in the mid-1980's. The Engineering Test Facility (ETF) is being designed for the engineering test phase. It will combine power-reactor-type components and subsystems into an integrated tokamak system and provide a test bed to test blanket modules in a fusion environment. Reactor demonstration will be accomplished with an Engineering Prototype Reactor (EPR) and/or a Commercial Demonstration Reactor (DEMO).

The specific requirements established for the ETF are the following:

(1) Demonstrate the successful operation of superconducting magnets of sufficient strength and size to be representative of a commercial power reactor.

(2) Incorporate the means for testing different blanket, first-wall, and shield modules. Ease of changeout of test items is a design requirement. Provide for the testing of reactor-relevant blankets for breeding tritium fuel. The capability for testing reactor-relevant electricity and synfuel production modules should also be incorporated.

(3) Demonstrate the capability of heat removal systems operating at power-producing temperatures.

(4) Demonstrate the use of systems and techniques for radioactive maintenance.

(5) Establish and apply the means to ensure public and operator safety in the conduct of machine operation.

Potential additional items will be added only to the degree justified by the cost analysis of each added functional objective. Such items include

(1) plasma physics experimentation,

(2) materials testing, and

(3) the small-scale generation of electricity.

Although an official schedule has not been adopted for the ETF, the Design Center is proceeding with the design based on the assumption that authorization to initiate the detailed design and construction on October 1, 1933, will be received. On that basis the machine would become operational at the end of 1990.

II. OVERALL DESIGN

A major concern in the design of the ETF is the impurity control system. Two basic divertor impurity control systems, which appear to have some potential for power reactor applications, have been proposed: the bundle divertor and the poloidal divertor. Although the bundle divertor is more attractive with respect to physical installation, it presents substantial problems and uncertainties with respect to impact on plasma operating conditions. The poloidal divertor, on the other

hand, is more attractive with respect to plasma conditions but very unattractive in terms of physical installation. Thus, it is not at all apparent which design approach is the most favorable overall. Accordingly, two ETF machine designs are being developed: Design 1 with a bundle divertor and Design 2 with a poloidal divertor.[9]

The basic design parameters for the two machines are listed in Table I. When possible the parameters have been kept the same. In some areas, such as the bore size of the toroidal field (TF) coils, however, it has been necessary to apply different values to account for the impact of using the different impurity control systems.

A major concern in the design of the ETF has been the provisions for the maintenance and installation of test modules in order to attain a reasonable availability. In particular, based on experience with similar facilities, it is recognized that much of the downtime is due to the requirements of minor maintenance and adjustments and that flexibility is required to cope with unanticipated failure modes.

Remote maintenance techniques typically take longer to accomplish but can be started sooner than contact procedures. Also, they require special design features and maintenance equipment. An additional consideration is that for major operations requiring remote maintenance procedures, substantial savings in downtime can be achieved by setting up the remote maintenance equipment and preparing the component to be removed using contact procedures. For example, in removing a shield sector the welded seal and bolted brackets between the sector and the

support spool can be disjoined and the air-bearing transport pallet can be installed using contact procedures.

These considerations led to the adoption of the requirement that the reactor shield be designed to limit the activation dose to 2 mrem/h 24 h after shutdown so that contact maintenance can be carried out outside the shield system. After setting up any remote maintenance equipment for accessing components inside the shield, it will be necessary to evacuate the reactor cell and perform those operations in a completely remote mode.

A. Design 1

The general arrangement of Design 1 is shown in Figs. 1 and 2. The plasma chamber is assembled by the insertion of ten 36° shield sectors into a spool support structure. The face edges of the sectors are sealed with the spool support structure, forming a vacuum-tight enclosure for the plasma chamber.

Access and ripple considerations led to the selection of a ten-coil arrangement for the TF coil system. The TF coils, which have a bore 7.5 m by 10.8 m, require a field of 11.4 T at the coil in order to produce 5.5 T on-axis. It has not yet been decided whether these coils will be Nb_3Sn or superfluid-cooled NbTi.

The poloidal field (PF) coil system is installed mainly in the poloidal bore and outside the TF coils, but a limited number of low-current, fast-response coils are located in the toroidal bore of the TF

coil assembly. Those in the poloidal bore and outside the TF coils are superconducting NbTi whereas those inside the toroidal bore are normal copper and are segmented so that they can be replaced if necessary.

The TF coils, superconducting PF coils, and bucking cylinder for the TF coils are all enclosed in a common dewar. The dewar is a dome structure that envelopes the top and bottom sections of the TF coils and the inboard region of the TF coil toroidal bore with a surface of revolution. The outboard legs of the TF coils are enclosed with individual extensions of the common dewar, providing ten bays for access to the torus.

The plasma is heated by an installation of four neutral beam lines, each with six ion sources. With three beam lines or a minimum of 17 of the 24 sources operating, the nominal injected power of 60 MW at 150 keV is achieved.

The plasma chamber is evacuated by an installation of four pairs of compound cryosorption vacuum pumps tied into the neutral beam injector (NBI) ducts at the NBI shutter shield. These pumps employ cryosorption panels for pumping helium as well as cryocondensation panels for pumping the hydrogen isotopes. They are sized to reduce the plasma chamber pressure from 3×10^{-4} to 3×10^{-5} torr in 13 s.

A radio frequency (rf) system is provided for startup assist. This sytem, which supplies a total of 5 MW of power at 140 GHz, is used for ionization, plasma initiation, and supplemental heating of the plasma during the early phases of startup.

The bundle divertor is installed in one of the bays in such a manner that it can be removed by radial extraction. This divertor has two sets of coils: the primary divertor coils and a set of expansion coils. Being normal-conducting copper coils, they require about 100 MW of power. The diverted plasma impinges on a water-cooled target with tungsten tiles. Pumping the divertor target is accomplished with two sets of three vacuum pumps, one set operational while the second set is being regenerated.

A combination pellet injection and gas puffing system is used for fueling. Three injectors are installed, one for tritium-rich pellets, one for deuterium-rich pellets, and one for pellets with a 50-50 mixture of tritium and deuterium.

The neutral beam injectors occupy four of the bays between adjacent TF coils, the bundle divertor one bay, and the fueling injectors half of a bay. The remaining 4 1/2 bays are available for diagnostics, instrumentation, and test modules.

B. Design 2

Design 2 is similar to Design 1 in many respects (Figs. 3 and 4), but there are some notable differences that are congruent with the installation of a poloidal divertor. In order to minimize the space required to accommodate the torus, a single null divertor was adopted. With this approach the plasma axis had to be displaced upward 0.5 m to permit installation of the divertor collector at the bottom of the

torus. The net effect was an increase in the overall torus height of about 1 m. In addition, in order to facilitate the replacement of the divertor collector modules, the truncations at the top and bottom of the outboard corners of the torus were eliminated. These changes in configuration necessitated enlarging the TF coils so that the horizontal bore is about one 1 m larger than that for Design 1.

Because the poloidal divertor has a toroidally continuous divertor collector that must be replaceable, it is divided into ten modules that, together with their pumping ducts, can be independently removed from the torus. Each of the pumping ducts extends to a pair of cryosorption pumps that can be valved off to permit the regeneration of one while the other is on-line. These pumps, which are sized to handle the divertor gas load, are more than adequate to pump down the plasma between burns.

Because of the larger size of the TF coils, the current ratings and physical sizes (cross section as well as length) of the PF coils must be considerably larger. In addition, large superconducting coils are required for creating the separatrix to direct the plasma into the divertor collector.

With Design 2 the space in the lower part of the plasma chamber is occupied by the divertor collectors, severely limiting the space available for diagnostics installed in a vertical orientation and also reducing the space available for test modules. On the other hand, there is an additional bay available for instrumentation, diagnostics,

and test modules. Therefore, the total area available to accommodate these requirements is approximately the same.

III. VACUUM SYSTEMS

The ETF reactors have three principal vacuum pumping requirements: (1) plasma chamber pumpdown between burns, (2) divertor collector pumping during burn, and (3) maintenance of vacuum conditions in the NBI beam lines. It is also necessary to maintain a vacuum in the superconducting coil dewar; however, the pumping requirements for this component are not particularly demanding, and it is expected that they can be met with available equipment.

A. Design 1

A.1 Plasma chamber

The basic plasma chamber pumping requirements for Design 1 are given in Table II. To provide for discharge cleaning prior to D-T burn operation the plasma chamber must be pumped down to and maintained at 10^{-7} torr. During operation the chamber must be pumped down from a total pressure of 3×10^{-4} to 3×10^{-5} torr in 13 s, a time established on the basis of achieving a reasonable duty factor (0.74) and subject to tradeoffs and optimization as the design is developed. This results in a total pumping speed requirement at the plasma chamber of about 6×10^{4} ℓ/s. Allowing for outgassing, a nominal pumping speed requirement of 10^{5} ℓ/s was established.

In order to minimize the number of penetrations into the plasma chamber, it was decided to connect the plasma chamber pumping ducts to the NBI ducts. This limits the number of ducts to the same as the number of neutral beam injectors — four (see Table III).

Mercury diffusion pumps, turbomolecular pumps, and compound cryopumps were considered for ETF application. Potential plasma chamber contamination and toxicity are the main concerns with mercury diffusion pumps. For the sizes of turbomolecular pumps now available (3500 ℓ/s), a very large number of pumps (more than 30 for the plasma chamber pumping requirements alone) would be needed. Their installation would be cumbersome and costly. Even with development the maximum capacity of a single pump is very limited. Accordingly, compound cryopumps with a molecular seive sorbent material were selected. Cryopumps have the further advantage of being easily scaled up to higher pump speeds as required for demonstration and commercial fusion reactors.

Two pumps are provided per pump duct so that one of each pair can be valved off and regenerated while the other is on-line. Each pump is provided with 4 m^2 of sorbent material that has a panel pumping speed of 2×10^5 ℓ/s. The cryocondensation pumping speed of the chevrons is 2×10^5 ℓ/s per pump for the hydrogen isotopes. With four pumps operating, a total net speed of 1.1×10^5 ℓ/s is provided at the torus.

The pumps are regenerated every 2 h to limit the potential hazard due to tritium holdups on the cryocondensation chevrons. Regeneration is carried out at about 20 torr by interrupting the supply of cryogens and allowing the cryopanels to warm up. Oil-free mechanical pumps

(e.g., bellows or scroll pumps) are used to boost the pressure further to about 1 atm, the condition at which the helium and other waste components are separated and the hydrogen isotopes are processed prior to return to the reactor.

Initial pumpdown of the plasma chamber to about 20 torr is accomplished by an oil-free mechanical pump. Cryosorption pumps, operating at liquid-nitrogen temperatures, are used to reduce the pressure into the 10^{-3}-torr range. Therefore, liquid helium is used to reduce the pressure to the chamber conditioning range of 10^{-7} torr.

A.2 Divertor collector

When part of the plasma is diverted from the plasma chamber and directed against a cooled plate, the deuterium, tritium, helium, and impurity ions are neutralized and must be pumped from the divertor collector to maintain an equilibrium condition. Because the plasma conditions are not well known, the pumping conditions are crude estimates at best. Current estimates are 2.7×10^{20} helium atoms per second at a pressure of 2.5×10^{-4} torr. This results in a helium pumping speed of 3.3×10^{4} ℓ/s at 300 K.

The pumping system characteristics to meet this requirement are presented in Table IV. Three pairs of pumps are installed so that one set can be regenerated while the other is on-line. These pumps are similar to the compound cryopumps used for the plasma chamber pumping system except that they are much larger, having a cryosorption panel

area of some 45 m^2 for each pump. With a pump duct 1.5 m in diameter, the net speed per pump at the divertor is 10^5 ℓ/s.

The divertor pumps are regenerated at 20 torr at 2-h intervals, similar to the plasma chamber vacuum pumps.

A.3 Neutral beams

The four neutral beam lines are supplied with essentially pure deuterium, which is ionized and injected into the plasma to provide bulk heating. Because some of the gas fed to the ion sources is not ionized, it escapes from the source side through the chamber partition into the drift chamber. Sixty-eight square meters of cryocondensation panels served by liquid helium and thermally protected by LN_2 chevrons pump the cold gas and maintain a pressure of 4×10^{-6} torr in the neutral beam injectors.

The cryopanels are sized to accept the gas load for one week of operation. Because they can be regenerated in about 2 h, no provision is made for the isolation and regeneration of the cryopanels while the machine is on-line. Rather, it is planned to regenerate the panels when the machine is shut down for periodic maintenance.

Oil-free mechanical roughing pumps and turbomolecular pumps are used to pump the beam line down from 1 atm to 10^{-5} torr. Assuming a 1-h pumpdown, a 2000-cfm mechanical roughing pump will reduce the pressure to about 10^{-2} torr. A 800-ℓ/s turbomolecular pump for each beam line is then used to reduce the pressure further to 10^{-5} torr in

an additional hour. At that point the cryopanels are brought into service.

B. Design 2

In Design 2 a substantial area is available for the poloidal divertor throat, and there is adequate conductance for plasma chamber pumpdown through the divertor collector. Accordingly, the pumps used for divertor pumping are also used for plasma chamber pumpdown.

The basic divertor pumping requirement for Design 2 is 3.3×10^5 ℓ/s at a pressure of 2.5×10^{-5} torr. The pumping pressure requirement is an order of magnitude lower than that for the bundle divertor because the pumping effectiveness of the poloidal divertor channel is not as great as it is for the bundle divertor channel. These requirements are met by an installation of ten pairs of compound cryopumps (see Table V) similar to the pumps described for Design 1 plasma chamber pumpdown. The pumps are installed in pairs so that they can be regenerated while the machine is still operating. With 13 m^3/pump the cryosorption panels can pump 9×10^4 ℓ/s, and with 1.77-m^2 pump ducts the net speed at the divertor collector for helium is 3.6×10^4 ℓ/s for each pump.

The roughing pump and NBI vacuum pumping system are the same as for Design 1.

IV. CONCLUSIONS

The two ETF conceptual designs being developed appear to meet the requirements of the fusion program with respect to the attainment of plasma conditions and the development of fusion technologies. The basic tokamak systems can be integrated and operated in such a way as to provide the confidence needed to proceed with the more advanced EPR and/or DEMO reactors.

Compound cryopumps are needed, the highest capacities being required for plasma chamber pumpdown for Design 1 and for poloidal divertor pumping for Design 2. For either case new pumps will have to be developed. Although molecular seive sorbent material has been selected as the basis for sizing the pumps, argon frost and charcoal are also considered candidate materials.

Large hard-seal valves in the 1-1.5-m size range will also have to be developed for the ETF. Although the leak requirements imposed on these valves are not very stringent, they do have to have bakeout capability to decontaminate the exposed surfaces when a pump has to be removed from the reactor installation.

Design studies to date do indicate that although the vacuum system constitutes only about 1% of the overall ETF cost, reliability and maintainability are important considerations. Being basically a static device the compound cryopump should be inherently reliable. The main concern will be the development of a reliable cryogen feed and control system. Future work will emphasize the development of remote maintenance and/or replacement, including shield design for ready access.

REFERENCES

[1]Experimental Fusion Power Reactor Conceptual Design Study, GA-A14000, Vols. I-III, General Atomic Company (July 1976).

[2]Oak Ridge Tokamak Experimental Power Reactor Study 1976, ORNL/TM-5572-77, Parts 1-6, Oak Ridge National Laboratory (April 1977).

[3]A Revised Design for the Tokamak Experimental Power Reactor, ANL/FPP/TM-77, Argonne National Laboratory (March 1977).

[4]ORNL/TM-6720-6731, Oak Ridge National Laboratory (April-June 1979).

[5]GAC-ANL TNS Scoping Studies, GA-A14614, Vols. I-XI, General Atomic Company (January 1978).

[6]GA TNS Project, GA-A15100, Vols. I-VIII, General Atomic Company (October 1978).

[7]SPLX, Superconducting Long-Pulse Experiment: Final Report on Scoping Study, PPPL-1501, Vols. I-III, Princeton Plasma Physics Laboratory (November 1978).

[8]The Department of Energy Policy for Fusion Energy, DOE/ET-0018, U.S. Department of Energy (September 1978).

[9]ETF Interim Design Description Document, Oak Ridge National Laboratory (July 1980).

TABLE I. ETF design parameters.[a]

Plasma major radius, R	5.4 m
Plasma elongation, δ	1.6
Plasma minor radius, a	1.3 m
Plasma volume, V_p	289 m^3
Plasma current, I_p	6.1 MA
Neutron wall loading, L_w	1.5 MW/m^2
Total fusion power, P_{tot}	750 MW
Fusion power density, n	2.6 MW/m^3
Number of TF coils	10
TF coil vertical bore	10.8/12.6 m[b]
TF coil horizontal bore	7.5/8.6 m[b]
Field at TF coil, B_m	11.4 T
Field on-axis, B_T	5.5 T
Steady-state burn time	100 s
Total cycle time	135 s
Total volt-seconds	85
Neutral beam power, P_{inj}	60 MW
Neutral beam energy, E_{inj}	150 keV
Injection time, τ_{inj}	6.0 s
Microwave power (startup)	5 MW
Microwave frequency	140 GHz

[a]Reference [illegible].

[b]Design 1/Design 2.

TABLE II. Plasma chamber vacuum pumping system requirements — Design 1.

Base pressure, torr	10^{-7}
Volume evacuated, m^3	333
Evacuation time, s	13
Initial pressure, torr	3×10^{-4}
Final pressure, torr	3×10^{-5}
Pumping speed, ℓ/s	10^5

TABLE III. Plasma chamber vacuum pumping systems characteristics — Design 1.

Number of pump ducts	4
Number of pumps per duct	2
Pump duct area, m^2	1
Type of pump	Compound cryopump
Sorbent material	MS 5A
Cryosorption panel area per pump, m^2	4
Cryocondensation chevron speed, ℓ/s	2×10^5
Net speed at torus per pump, ℓ/s	2.75×10^4

TABLE IV. Bundle divertor pumping system characteristics.

Number of pumps	6 (3 pairs)
Type of pump	Compound cryopump
Sorbent material	MS 5A
Cryosorption panel area per pump, m^2	45
Cryosorption panel speed per pump, ℓ/s	4×10^5
Net speed per pump, ℓ/s	1×10^5
Pump duct diameter, m	1.5

TABLE V. Vacuum pumping system characteristics — Design 2.

Number of pairs of pumps	10
Type of pump	Compound cryopump
Sorbent material	MS 5A
Cryosorption panel area per pump, m^2	13
Cryosorption panel speed per pump for helium, ℓ/s	9×10^4
Pump minimum duct cross-section area, m^2	1.77
Net speed per pump for helium, ℓ/s	3.6×10^4

FIGURE CAPTIONS

FIG. 1. ETF Design 1 — elevation view.

FIG. 2. ETF Design 1 — plan view.

FIG. 3. ETF Design 2 — elevation view.

FIG. 4. ETF Design 2 — plan view.

ORNL-DWG 80-2870 FED

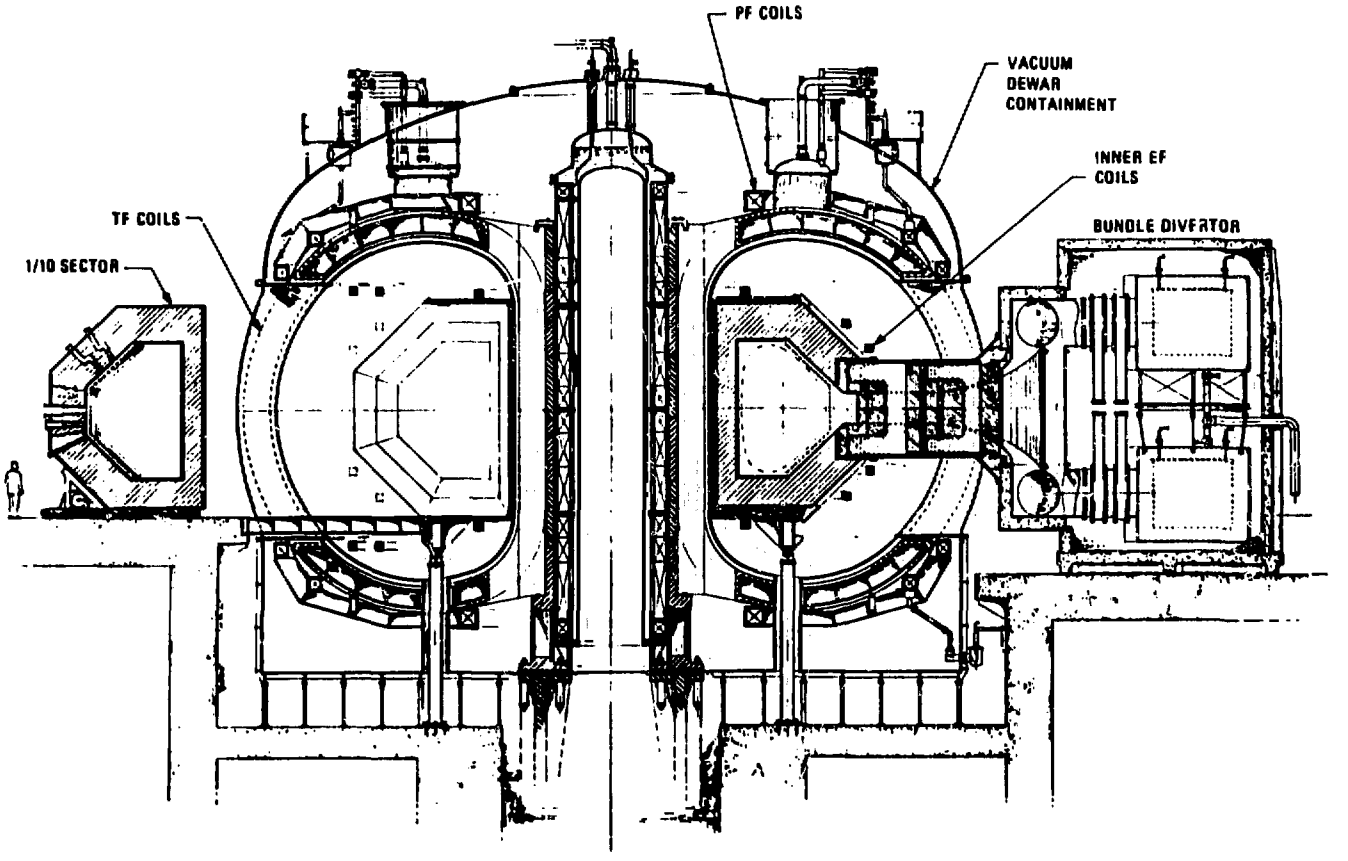

ORNL DWG 80-2869 FED

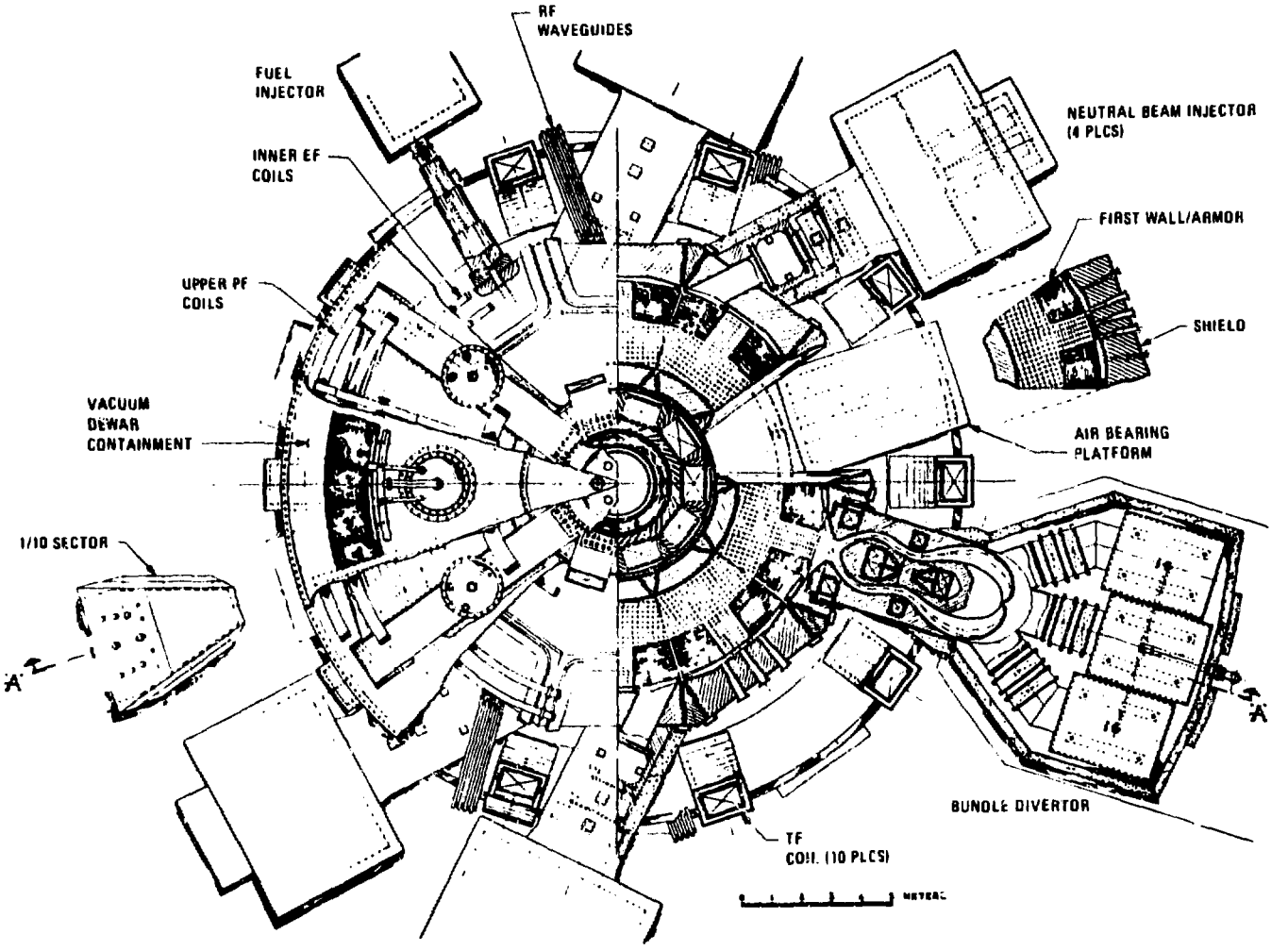

ORNL-DWG 80-3105 FED

DESIGN 2 - ELEVATION VIEW

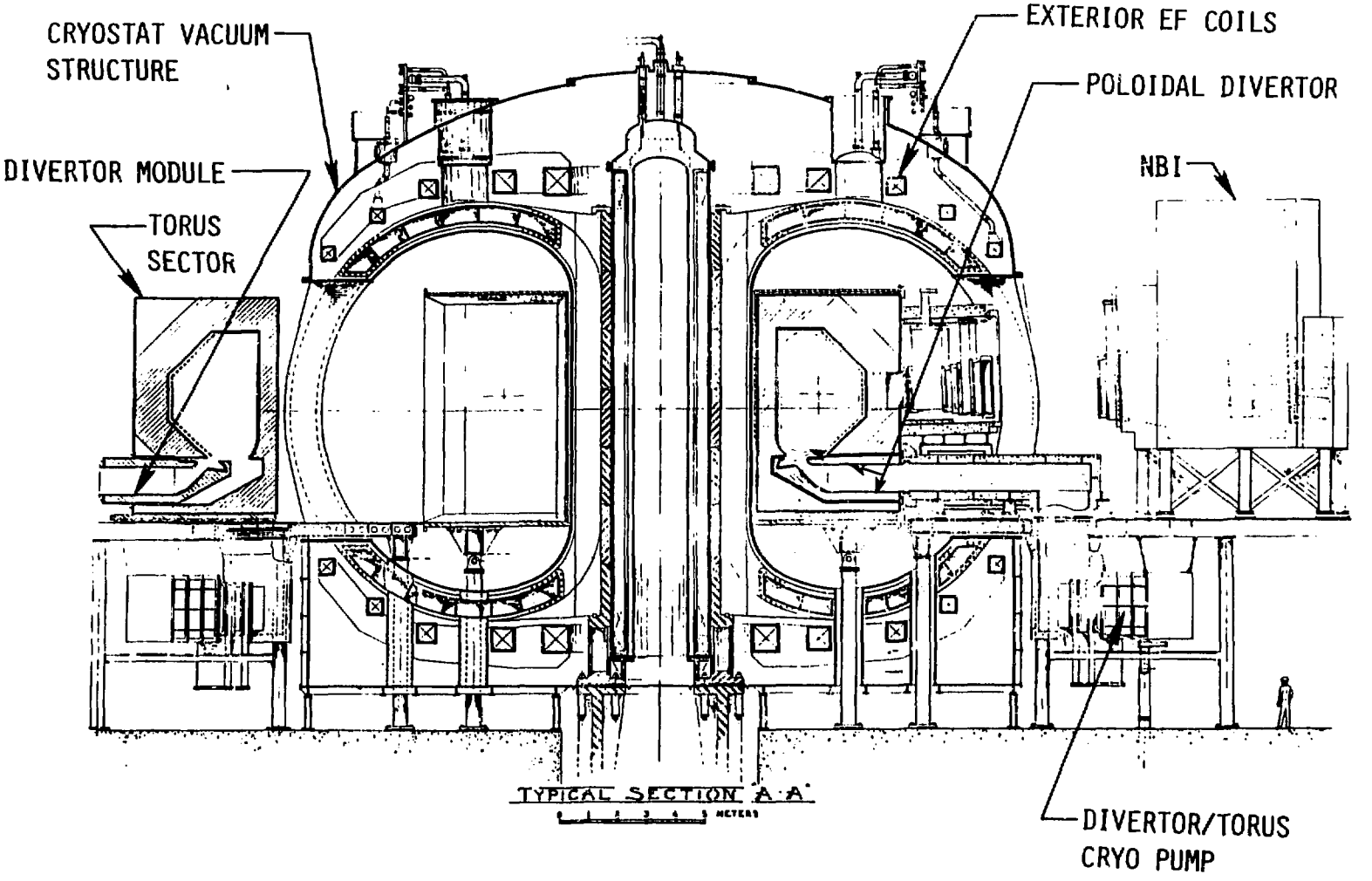

ORNL-DWG 80-3106 FED
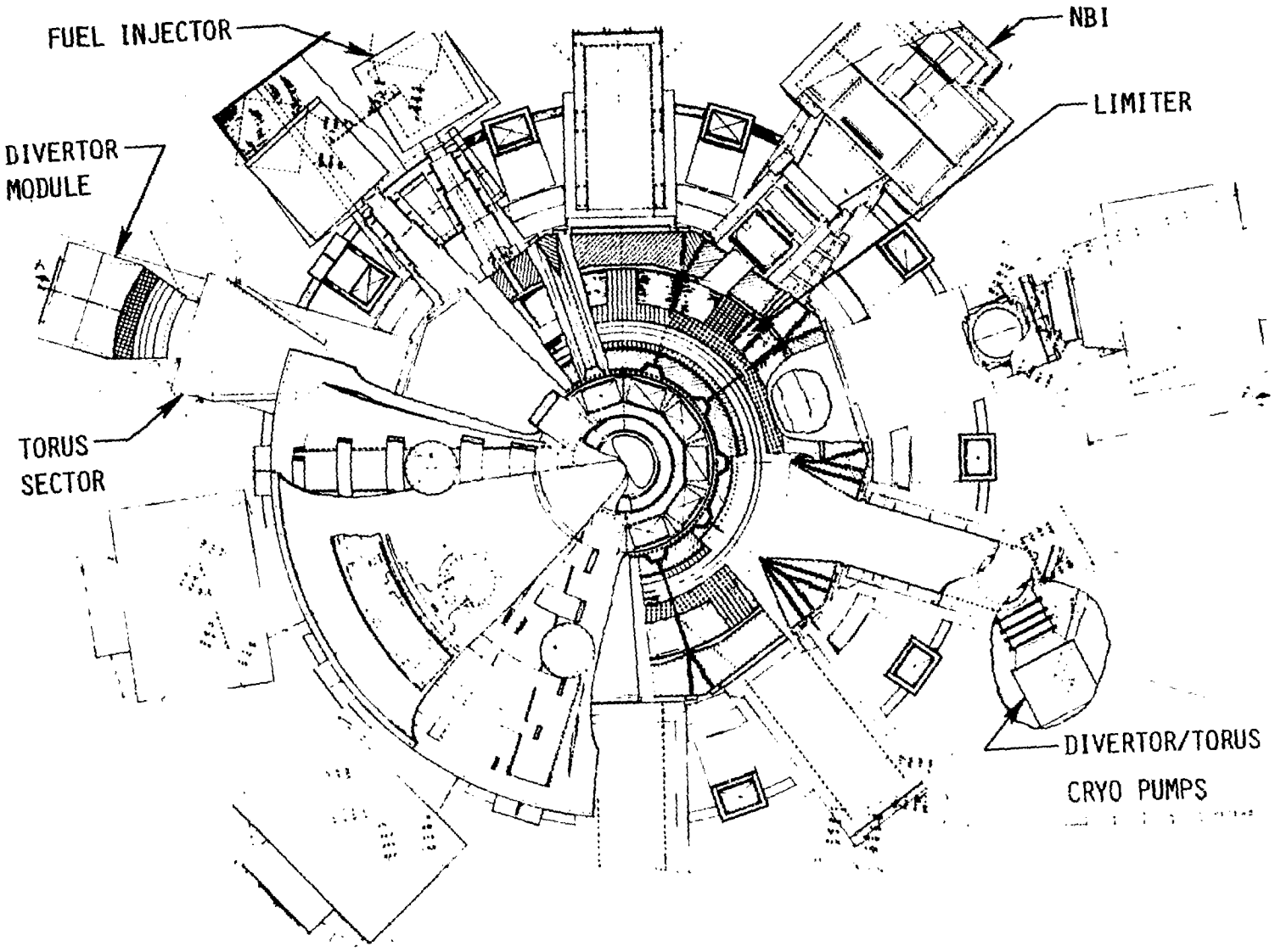
DESIGN 2 - PLAN VIEW