Received OSTI
SEP 0 8 1992

ANL-89/37

Chemical Technology
Division
Chemical Technology
Division
Chemical Technology
Division

TRUEX Hot Demonstration: Final Report

by D. B. Chamberlain, R. A. Leonard,
J. C. Hoh, E. C. Gay, D. G. Kalina,
and G. F. Vandegrift

Argonne National Laboratory, Argonne, Illinois 60439
operated by The University of Chicago
for the United States Department of Energy under Contract W-31-109-Eng-38

MASTER

DISTRIBUTION OF THIS DOCUMENT IS UNLIMITED

Argonne National Laboratory, with facilities in the states of Illinois and Idaho, is owned by the United States government, and operated by The University of Chicago under the provisions of a contract with the Department of Energy.

DISCLAIMER

This report was prepared as an account of work sponsored by an agency of the United States Government. Neither the United States Government nor any agency thereof, nor any of their employees, makes any warranty, express or implied, or assumes any legal liability or responsibility for the accuracy, completeness, or usefulness of any information, apparatus, product, or process disclosed, or represents that its use would not infringe privately owned rights. Reference herein to any specific commercial product, process, or service by trade name, trademark, manufacturer, or otherwise, does not necessarily constitute or imply its endorsement, recommendation, or favoring by the United States Government or any agency thereof. The views and opinions of authors expressed herein do not necessarily state or reflect those of the United States Government or any agency thereof.

This report has been reproduced from the best available copy.

Available from the
National Technical Information Service
U.S. Department of Commerce
5285 Port Royal Road
Springfield, VA 22161

Price: Printed Copy A05
Microfiche A01

Distribution Category:
Defense Waste Management
UC-721

ANL--89/37

DE92 040604

ANL-89/37

Argonne National Laboratory
9700 South Cass Avenue
Argonne, Illinois 60439

TRUEX HOT DEMONSTRATION: FINAL REPORT

by

D. B. Chamberlain, R. A. Leonard, J. C. Hoh,
E. C. Gay, D. G. Kalina, and G. F. Vandegrift

Chemical Technology Division

April 1990

MASTER

TABLE OF CONTENTS

	Page
ABSTRACT	1
SUMMARY	1
I. INTRODUCTION	3
A. Program Description	3
B. TRUEX Process	5
C. Design Basis	7
II. PROCESS AND EQUIPMENT DESIGN	7
A. Fuel Receipt and Storage	9
1. Process Description	9
2. Cell and Equipment Modifications	9
B. Shear Cell	12
1. Process Description	12
2. Cell and Equipment Modifications	13
C. Dissolver Cell	13
1. Process Description	13
2. Cell and Equipment Modifications	15
D. Contactor Cell	15
1. Process Description	15
2. Cell Modifications	16
3. Contactor Cell Design	17
E. Waste Processing	31
1. Waste and Product Stream Treatment	33
2. Shielding Requirements	34
REFERENCES	36
APPENDIX A. Shielded-Cell Facility Description	39
APPENDIX B. Dissolution Bases for the Hot Demonstration Program	42
APPENDIX C. The Modified-PUREX/TRUEX Process	55

LIST OF FIGURES

No.	Title	Page
1.	Argonne Shielded-Cell Facility	4
2.	Chemical Structure of CMPO	6
3.	TRUEX Flowsheet	6
4.	Diagram of the Primary and Secondary Fuel Storage Containers	10
5.	Fuel Storage Pits in Shielded-Cell Facility	11
6.	Fuel Hanger Storage Basket	11
7.	Schematic of Dissolver Vessel	14
8.	Dimensions of the Centrifugal Contactor Cell	18
9.	Centrifugal Contactor Cell Operating Areas	19
10.	Typical Aqueous Feed and Product Lines	19
11.	Centrifugal Contactor Cell Ventilation	21
12.	Centrifugal Contactor Flow Diagram for the PUREX Flowsheet	23
13.	Angle Iron Support Frame	25
14.	Box Beam Support Frame	26
15.	Centrifugal Contactor Cell Equipment Layout	31
A-1.	Floor Plan of Shielded-Cell Facility	40
A-2.	Floor Plan of Cave Complex in Shielded-Cell Facility	41
C-1.	Modified-PUREX/TRUEX Process for U and TRU Element Recovery from Nuclear Fuel Rods	55
C-2	Acid Dependency of D_{Am} for 0.25M CMPO in Decalin as a Function of Added TBP at 25 °C	65

LIST OF TABLES

No.	Title	Page
1.	Design Basis	8
2.	Spent Fuel Inventory at Battelle-Columbus Laboratory	8
3.	Activity of Spent Fuel Stored at Battelle-Columbus Laboratory	10
4.	Typical System Flow Rates and Process Volumes for PUREX and TRUEX Processing	17
5.	Process Vessel Volumes and Dimensions	22
6.	Waste Stream Description and Disposal Methods	32
7.	Calculated Volume of Waste Solutions Requiring Shielded Containers	35
8.	Work Breakdown for the Cement Works to Process Waste from 50 Typical Fuel Rods	35
B-1.	Spent Fuels Stored at ICPP/INEL Compatible with Dissolution in HNO_3	44
B-2.	Spent Fuels Stored at ICPP/INEL Possibly Requiring Special Treatment for Dissolution	46
B-3.	Selected Data for Fuel Dissolution	48
C-1.	Studies of Pu(III) and Fe(II) Stability in Nitrate Solution	59
C-2	Feed Compositions used to Measure Distribution Ratios of Various Species in TRUEX Extraction	62
C-3	Effect of Temperature on Distribution Ratios of Various Species in TRUEX Extractions	63
C-4	Ranges of Concentrations for Species Important to TRUEX Processing of Fission-Product-Containing Solutions of Pu and Am	65

LIST OF TABLES (cont'd)

No.	Title	Page
C-5	Composition of Typical 10-Year-Cooled PWR Fuel	67
C-6	Relative Stream Flows for the Modified-PUREX Section of the Process	67
C-7	Relative Stream Flows for the TRUEX Section of the Process	68

TRUEX HOT DEMONSTRATION: FINAL REPORT

by

D. B. Chamberlain, R. A. Leonard, J. C. Hoh,
E. C. Gay, D. G. Kalina, and G. F. Vandegrift

ABSTRACT

In FY 1987, a program was initiated to demonstrate technology for recovering transuranic (TRU) elements from defense wastes. This hot demonstration was to be carried out with solution from the dissolution of irradiated fuels. This recovery would be accomplished with both PUREX and TRUEX solvent extraction processes. Work planned for this program included preparation of a shielded-cell facility for the receipt and storage of spent fuel from commercial power reactors, dissolution of this fuel, operation of a PUREX process to produce specific feeds for the TRUEX process, operation of a TRUEX process to remove residual actinide elements from PUREX process raffinates, and processing and disposal of waste and product streams. This report documents the work completed in planning and starting up this program. It is meant to serve as a guide for anyone planning similar demonstrations of TRUEX or other solvent extraction processing in a shielded-cell facility.

SUMMARY

The objective of this program was to demonstrate a TRUEX process using radioactive solutions generated from the dissolution and processing of spent fuel rods. The TRUEX process was developed to reclaim actinide elements from a variety of acidic TRU-containing wastes, thus converting them to nonTRU wastes. The preliminary design work for this program has been completed. However, because of limited funding, detailed specifications for the equipment required in each of the process steps were not generated, and only a limited amount of in-cell maintenance work was completed.

Some of the shielded facilities required for this program were previously installed and operated by an earlier ANL program. These facilities included cells and equipment for shearing and dissolving fuel and a cement works for solidifying waste streams. The Hot Demonstration Program also required additional cells for the solvent extraction processes and for additional waste processing.

Process steps planned for the Hot Demonstration Program included (1) the receipt and storage of spent fuel from commercial power reactors, (2) shearing of this fuel, (3) dissolution of

the fuel to produce an aqueous feed to the extraction processes, (4) operation of a PUREX process to produce specific feeds for TRUEX process studies, (5) operation of a TRUEX process to remove residual actinide elements from PUREX process raffinates, and (6) processing and disposal of waste and product streams. Each of these planned process steps is summarized below.

Spent fuel from commercial power reactors, stored at Battelle-Columbus Laboratory (BCL) and/or elsewhere, is shipped to ANL-East, unloaded from the shipping casks, and stored in shielded pits in a cave facility. To begin processing this fuel, a fuel rod is transferred from a storage pit to the shear cell and then sheared into small sections (typically less than 0.6-in. long). The sheared fuel is then canned and transferred to one of the storage pits for temporary storage or to the dissolver cell for dissolution.

In the dissolver cell, fuel is charged to the dissolver in a tantalum basket. The dissolution reagent (likely nitric acid alone or a mixture of nitric acid and hydrofluoric acid) is pumped into the dissolver, where the temperature and pressure can be increased to limits of 195 °C and 125 psig, respectively. Specific dissolution conditions (temperature, pressure, dissolution reagent composition) must be determined for the type of fuel being processed, but dissolution should take 4 h or less. During this period, the fuel (irradiated UO_2) is leached from the Zircaloy cladding. Following dissolution, the solution is sampled to determine its composition, filtered to remove undissolved solids, and then transferred to one of the 370-L storage vessels. The hulls (fuel cladding) are removed from the dissolver and disposed of as low-level waste.

In the next step of the process, a sequence of extraction steps is performed on the dissolver solution. These extractions are completed in a cell containing a centrifugal contactor. In this cell, feed preparation steps may be required. The PUREX process is used to extract a majority of the uranium and plutonium from the dissolver product, leaving behind a specific feed composition for treatment by the TRUEX process. Chemical additions may be required to adjust this solution for TRUEX processing. The raffinate from the PUREX process is then passed to the TRUEX process, where residual actinides are extracted. This yields a waste stream that after solidification contains less than 10 nCi alpha activity from the TRU elements per gram of solid. Additional solvent extraction process steps in both the PUREX and TRUEX processes include scrub sections (to purify the extracted products), strip sections (to remove extracted metals from the organic), and solvent cleanup steps.

Forty-eight 4-cm centrifugal contactor stages, designed at ANL, were planned for these extraction processes. Additional equipment, including radioactive feed and waste tanks, pumps, sample stations, and process monitoring equipment, were planned for installation in a hot cell.

A number of waste streams are produced when processing fuel with PUREX and TRUEX processes. These wastes include fuel cladding, uranium/plutonium product, americium-containing product, and nonTRU material. All of these wastes would be processed, packaged, and disposed of as required by current regulations. Processing and packaging of this waste were planned for other hot cells located in the cave complex.

I. INTRODUCTION

A. Program Description

The Hot Demonstration Program was initially funded in FY 1987 to develop the technology for the recovery of transuranic (TRU) components from defense wastes by use of a modified-PUREX/TRUEX process. (A description of the TRUEX process is given in Sec. I.B.) Withdrawal of funding in November 1986 led to the cancellation of this effort. The purpose of the Hot Demonstration Program was to provide information in a number of different areas:

(1) Test the ability of the Generic TRUEX Model developed at ANL to predict actinide and fission-product behavior with actual high-level waste solutions.

(2) Measure the effects of hydrolytic and radiolytic degradation of the TRUEX solvent.

(3) Test solvent cleanup procedures under realistic conditions.

(4) Examine the possibility of crud buildup in the TRUEX processing of high-level waste.

(5) Ascertain the fate of interfacial cruds and solids in centrifugal contactors and determine how such contactors operate with solids present.

(6) Demonstrate the remote operation and maintenance of centrifugal contactors.

(7) Optimize TRUEX process flowsheets for the treatment of specific high-level waste streams from the PUREX process.

(8) Find and solve problems before this process is used at production sites.

The Light Water Breeder Reactor Proof-of-Breeding (LWBR-POB) Project was recently completed at Argonne National Laboratory [GRACZYK]. This project was carried out in a shielded-cell facility and involved the shearing of LWBR fuel rods, dissolution of the rod segments, and analysis of the dissolver solution. A number of major equipment systems from this project were to be used in the Hot Demonstration Program. These systems include equipment in the shear cell, the dissolver cell, and some of the waste processing cell. A three-dimensional view of the cave complex used in the LWBR-POB Project is shown in Fig. 1. A more detailed description of the facility is given in Appendix A.

The steps planned for the Hot Demonstration Program, which are detailed in this report, include (1) receipt and storage of spent fuel from commercial power reactors, (2) shearing of this fuel, (3) dissolution of the fuel to produce aqueous feed to the extraction processes, (4) operation of a PUREX process to produce specific feeds for TRUEX process studies, (5) operation of a TRUEX process to remove residual actinide elements from PUREX process raffinates, and (6) processing and disposal of waste and product streams.

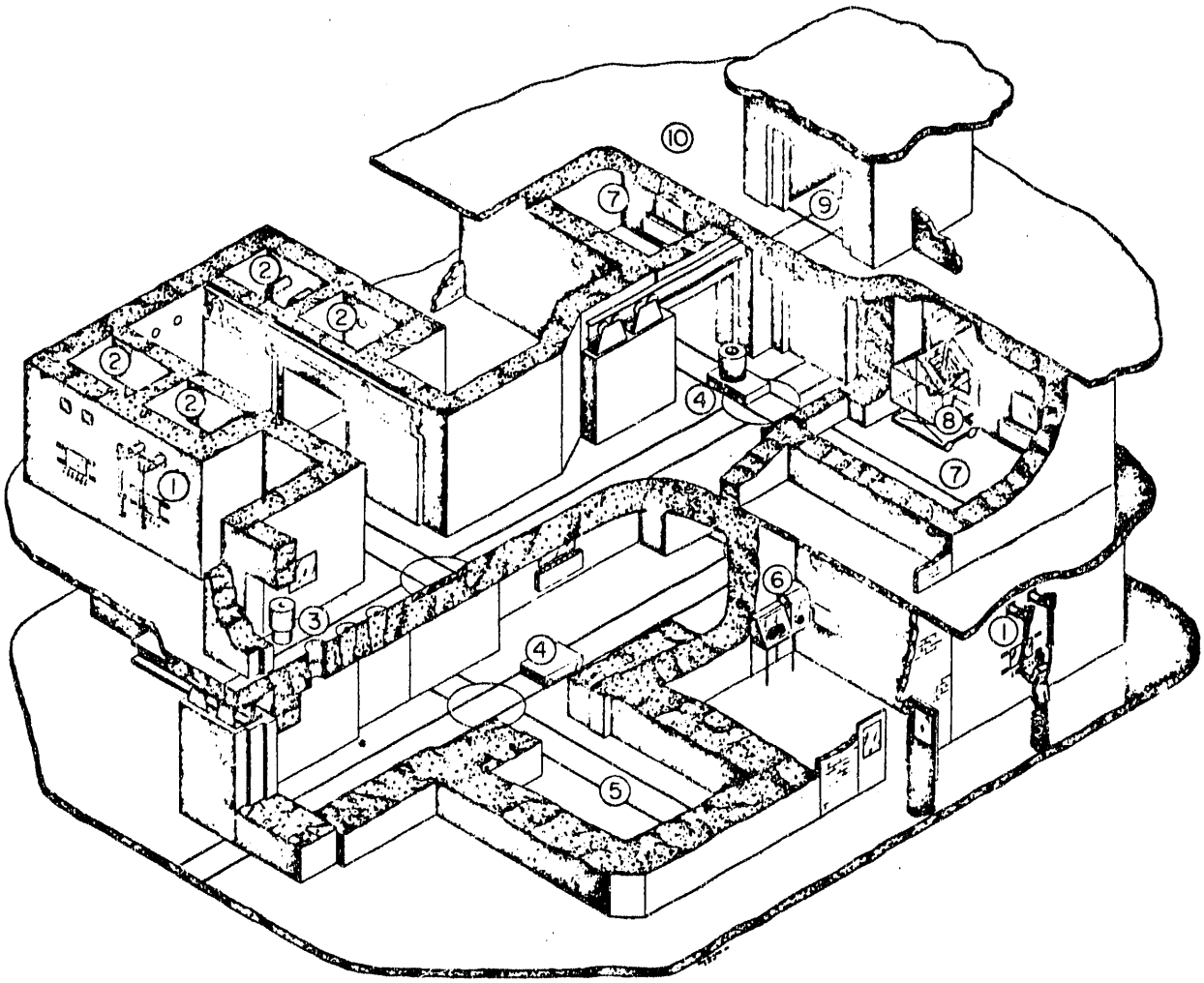

CHEMISTRY HOT LABORATORY SCHEMATIC DRAWING

1. ARGONNE-DESIGNED MASTER-SLAVE MANIPULATORS
2. CELLS FOR ANALYTICAL RESEARCH WITH SOURCES OF LOW-INTENSITY RADIATION
3. FLOOR PLUGS FOR TRANSFER OF SPECIMENS
4. RADIO-CONTROLLED CARTS
5. TYPICAL CELL FOR HANDLING SOURCES OF INTENSE RADIATION (WALLS 48 INCHES THICK)
6. TRANSFER APPARATUS LEADING TO GLOVE BOX
7. TYPICAL CELLS FOR HANDLING RADIATION SOURCES OF MEDIUM INTENSITY (WALLS 28 INCHES THICK)
8. SEALED CONTAINMENT BOX FOR HANDLING ALPHA-GAMMA EMITTERS
9. ELEVATOR
10. STORAGE AREA ON THIRD FLOOR

Fig. 1. Argonne Shielded Cell Facility

Appendices B and C document some of the work initially completed when this program was proposed to DOE. These two appendices present a summary of the dissolution processes for a variety of fuels that could be processed in the dissolvers located at ANL (Appendix B) and a detailed description of a modified-PUREX/TRUEX process (Appendix C). The modified-PUREX/TRUEX process was designed to recover purified neptunium, uranium, and plutonium products from dissolved nuclear fuel and to produce a nonTRU raffinate and a concentrated TRU waste stream containing americium, curium, and rare earth fission products.

The purpose of this report is to (1) document the effort that was completed in planning and starting up this program and (2) serve as a guide to those planning similar demonstrations of TRUEX on other solvent extraction processing where high-radiation fields necessitate the use of a shielded-cell facility.

B. TRUEX Process

The TRUEX (TRansUranic EXtraction) process was developed to reclaim actinide elements from a variety of acidic TRU-containing wastes, thus converting those wastes into nonTRU wastes [HORWITZ-1982, -1983A, -1983B, -1985A, -1985B, -1985C, -1986; KALINA-1985; LEONARD-1985, -1987; VANDEGRIFT]. Application of the TRUEX process would eliminate short-term waste stream problems in the U.S. defense community and would reduce the amount of waste that requires disposal in deep geologic repositories. Another advantage of the TRUEX process is that valuable TRU elements (e.g., plutonium) can be recovered from the wastes. The TRUEX process extracts, separates, and recovers transuranic elements from solutions composed of a wide range of nitric acid, fission product, and nitrate salt concentrations. This process was developed at ANL as a result of basic studies with a number of neutral, phosphorus-based, bifunctional extractants. The extractant found to be most satisfactory for this process is n-octyl(phenyl)-N,N-diisobutylcarbamoylmethylphosphine oxide (CMPO). The chemical structure for this compound is shown in Fig. 2.

To prepare the TRUEX process solvent, CMPO is combined with tributyl phosphate (TBP) and an appropriate diluent. This diluent can be either a normal paraffinic hydrocarbon (NPH), such as Conoco C_{12}-C_{14}, or, when there is a concern about fire or explosion prevention, a chlorocarbon, such as tetrachloroethylene (TCE). Conoco C_{12}-C_{14} is a normal paraffinic hydrocarbon mixture with an average carbon chain length of 13.4. The concentration of CMPO and TBP in the TRUEX-NPH solvent is 0.2M and 1.4M, respectively. The TRUEX-TCE solvent is formulated as 0.25M CMPO and 0.75M TBP diluted by TCE. The basic TRUEX process, shown schematically in Fig. 3, operates as follows.

A TRU-containing aqueous waste solution is fed to the extraction section, where the TRU components are extracted into the organic phase. The flowsheet is designed so that the raffinate that exits this section is a nonTRU waste stream. In the next section, the loaded solvent is scrubbed with a dilute nitric acid solution (0-0.50M). This dilution reduces the nitric acid concentration and some of the inert constituents in the organic phase that are extracted with the TRU elements, yet does not significantly lower the concentration of TRU elements in the loaded

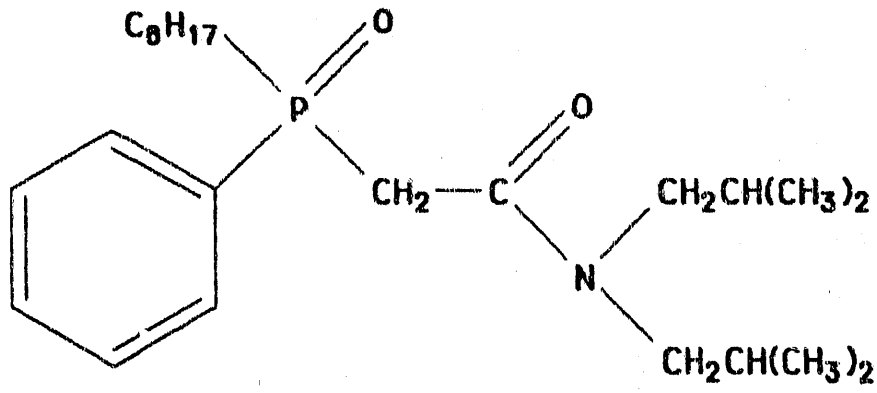

Fig. 2. Chemical Structure of CMPO

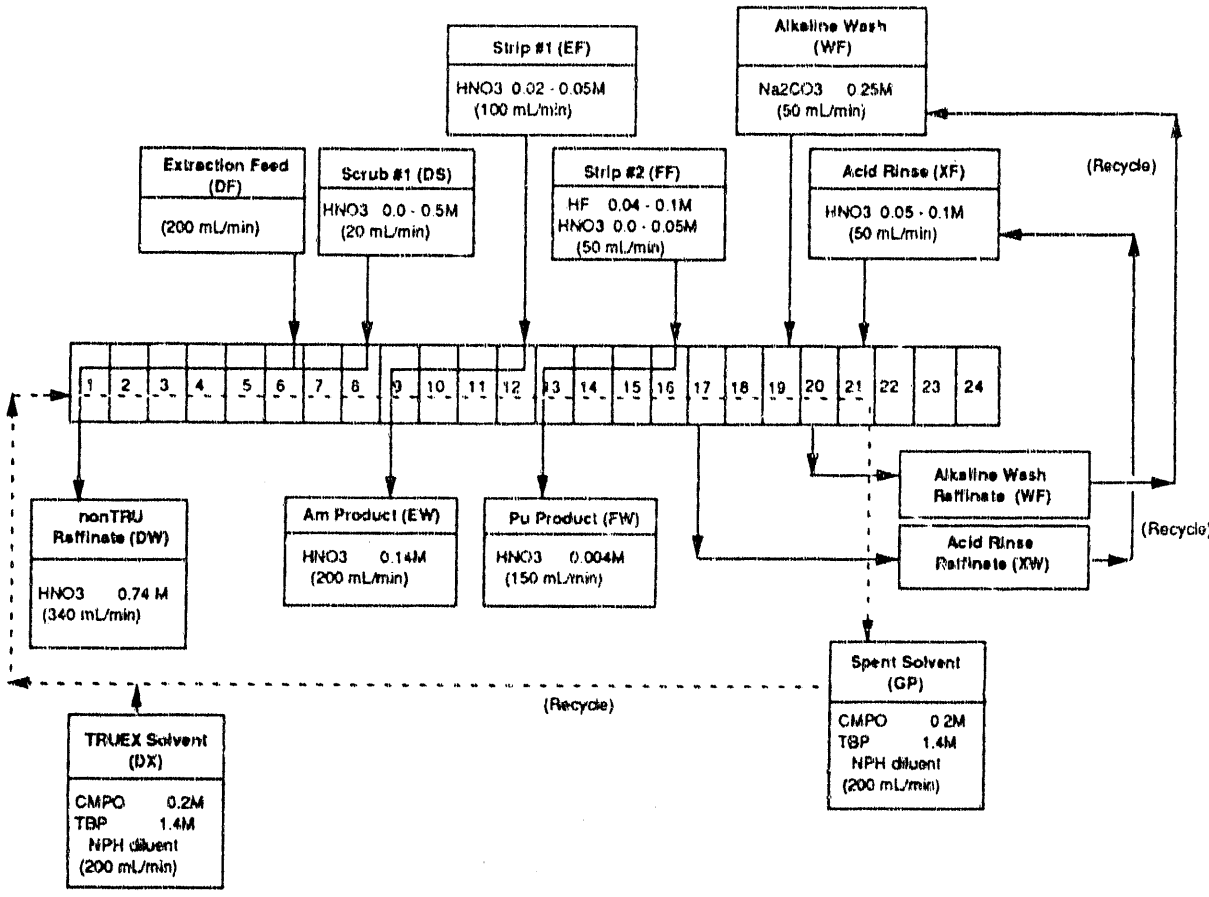

Fig. 3. TRUEX Flowsheet

TRUEX solvent. In the first strip section, americium and the rare earth fission products (REFP) are stripped by contacting the solvent with dilute nitric acid (0.02-0.05M). In the second strip section, the organic is contacted with a mixture of HF (0.04-0.1M) and nitric acid (0-0.05M) to remove plutonium from the solvent.

In a typical solvent cleanup section, the organic is contacted with a 0.25M Na_2CO_3 wash solution for removal of hydrolytic and radiolytic degradation products from the TRUEX solvent. Any uranium that is extracted into the solvent is also removed in this section of the process. The carbonate wash may be followed by a dilute acid rinse (~0.1M HNO_3) to remove any residual carbonate from the solvent. Following the acid rinse, the solvent can be recycled back to the extraction section.

C. Design Basis

To calculate the volume and composition of the feed and product streams, we made a number of assumptions, summarized in Table 1. For both the PUREX and TRUEX processes, ten hours was chosen as the length of a typical test. This should provide adequate time to reach steady state,* collect samples from the various process streams, and observe how the equipment and flowsheets work under realistic operating conditions. Special tests and/or conditions may change the length of time that the equipment would be operated.

Based upon data obtained from Battelle-Columbus Laboratory (see Table 2), a typical fuel rod contains approximately 2000 g uranium, 18 g ^{235}U, and 21.6 g plutonium. Assuming that the feed to the PUREX process contains approximately 210 g heavy metal, each fuel rod, when dissolved, would produce 9.6 L of solution. Since the design feed rate to the PUREX extraction section (AF) is 160 mL/min (9.6 L/h), ten fuel rods would be required to generate the solution for a typical test. This solution would contain 208 g/L uranium, 1.9 g/L ^{235}U, and 2.25 g/L plutonium.

The plan was to process the equivalent of 50 fuel rods in each of the first two years of the program. The balance of the fuel rods would be processed in the third year of the program. Additional details on solution volumes required for a typical test, the size of the equipment to be installed in the cells, and the expected waste volumes to be generated are discussed in Sec. II.

II. PROCESS AND EQUIPMENT DESIGN

Discussed below are the design, layout, and operating scenario for the process steps planned in the Hot Demonstration Program.

---

*Thirty minutes is adequate for most species.

Table 1. Design Basis

1. For a typical run, operate for 10 h.
2. Concentration of heavy metals in PUREX feed (AF) is at least 200 g/L.
3. Design feed rate of AF stream is 9.6 L/h (160 mL/min).
4. Complete fuel rods will be processed in each test.
5. Typical fuel rod composition is
   - Total uranium = 2000 g
   - 235-uranium = 18 g
   - Total plutonium = 21.6 g
6. Ten fuel rods processed in a 10-h run.
7. Typical aqueous feed composition (AF) is
   - Volume = 96 L
   - [Total uranium] = 208 g/L
   - [235-uranium] = 1.9 g/L
   - [Total plutonium] = 2.25 g/L
8. Process 50 fuel rods per year during first two years. Process balance of rods during third year.

Table 2. Spent Fuel Inventory at Battelle-Columbus Laboratory

Fuel Source	No. of Rods	Total U		U-235		Pu(239+241)	
		kg	kg/rod	g	g/rod	g	g/rod
Surry	12	20.0	1.7	119	10	124	10
Zion Phase I & II	13	26.9	2.1	95	7	179	14
H. B. Robinson	12	21.6	1.8	156	13	130	11
Oconee	14	21.9	1.6	176	13	176	13
Maine Yankee	3	6.3	2.1	83.7	28	23	8
Calvert Cliffs	1	0.1	0.1	2	2	15	15
Quad Cities	5.5	15.0	2.7	66	12	164	30
Brunswick	4.5	N/A[a]	N/A	355	79	35	8
Turkey Point	33	71.5	2.2	173	5	426	13
Conn. Yankee	4	7.6	1.9	104.6	26	57	14
Oyster Creek	14	49.3	3.5	458	33	253	18
Monticello	12	25.0	2.1	88	7	191	16
Shippingport	1	2.0	2.0	2	2	4	4

[a] N/A = no data available.

A. Fuel Receipt and Storage

1. Process Description

For this demonstration, approximately 121 rods stored at BCL had been identified as being acceptable for processing at ANL. Fissile material content, burnup, and the expected activity for these rods are listed in Tables 2 and 3. The information obtained in these tables was based upon information obtained from BCL [PASUPATHI]. To ship this fuel to Argonne, the fuel rods would be placed into the primary and secondary storage containers shown in Fig. 4. Each rod would be cut into four 3-ft-long sections and placed into 1-in. (or possibly 1.25 in.) dia schedule 40 pipe, 42-in. long. This pipe would serve as primary containment for the fuel rods. Each of these small-diameter pipes would be loaded into a secondary container that may range in size from 4 to 12 in. in diameter and about 48-in. long. The specific dimensions of the secondary container were not established since the results of a storage area criticality analysis are required to assure safe storage of this fuel. Twenty-four fuel rods could be placed in an 8-in. dia secondary container; six secondary containers of this size would hold all the fuel rods.

The secondary containers would be stored in the ten shielded pits located in the lower floor of the shielded-cell facility. Dimensions of a typical storage pit are shown in Fig. 5. It was expected that one secondary container would be placed into each storage pit. However, not all of the pits were available for storage since some already contained radioactive material. These pits are ideal for storage of the irradiated fuel because the large concrete plugs act both as radiation shields and security barriers to prevent unauthorized removal of the fuel.

2. Cell and Equipment Modifications

The following modifications and additions to the cells and fuel-handling equipment were required prior to receipt of fuel at the shielded-cell facility:

a. Baskets to suspend the fuel in the storage pits to permit easy retrieval of the fuel. Once the dimensions for the secondary fuel container were specified, appropriate storage baskets would be designed and fabricated. A typical storage rack is shown in Fig. 6. In addition to these baskets, a special basket is needed to hold aluminum cans for storing the fuel after it is sheared into small pieces.

b. Design and fabrication of appropriate fuel handling equipment.

c. Upgrading of the facility security so that plutonium-containing fuels can be stored and processed. These upgrades include the installation of motion detectors and alarms on the shielded corridor (service floor), locking devices on the storage pits, and an electrical lock-out box for the bridge crane. Other changes might also be required to satisfy security regulations.

Table 3. Activity of Spent Fuel Stored at Battelle-Columbus Laboratory

Fuel Source	Total Activity[a]			Fuel Burnup, MWD/MTU[b]	Date	
	Ci	Ci/rod	Date		In Reactor	Out of Reactor
Surry	3.4×10^4	2.8×10^3	04/22/83	2.9×10^4-4.4×10^4	10/07/78	11/07/81
Zion Phase I & II	5.0×10^4 [c]	4.5×10^3	06/10/83	4.5×10^4-5.5×10^4	1976	1987
H. B. Robinson	6.8×10^3	5.7×10^2	04/18/77	2.4×10^4-3.0×10^4	N/A	N/A
Oconee	1.1×10^5	7.9×10^3	03/17/78	2.0×10^4-2.6×10^4	N/A	N/A
Maine Yankee	8.1×10^3	2.7×10^3	11/04/74	1.0×10^4	11/72	06/74
Calvert Cliffs	6.0×10^3	6.0×10^3	06/17/78	5.9×10^4	1974	1982
Quad Cities	5.6×10^4	1.0×10^4	12/12/81	2.2×10^4-3.5×10^4	N/A	N/A
Brunswick	2.5×10^3	5.6×10^2	02/05/82	1.5×10^3-3.9×10^3	N/A	N/A
Turkey Point	2.7×10^4 [d]	3.9×10^3	07/10/79	2.6×10^4-2.8×10^4	01/12/72	11/25/75
Conn. Yankee	1.9×10^5 [e]	9.3×10^2	05/15/80	3.2×10^4-3.6×10^4	05/21/71	05/18/75
Oyster Creek	3.9×10^4	2.8×10^3	07/20/81	1.7×10^4-2.4×10^4	N/A	N/A
Monticello	5.4×10^4 [f]	9.0×10^3	08/29/81	4.2×10^4-5.0×10^4	01/01/76	08/01/82
Shippingport	N/A	N/A	-	4.0×10^3-1.8×10^4	1957	1964

[a]The activity shown was calculated using ORIGEN, the ORNL isotope generation and depletion code.
[b]MWD/MTU = megawatt days per metric ton uranium.
[c]Activity for 11 fuel rods.
[d]Activity for seven fuel rods.
[e]Activity calculated for a collection of 204 fuel rods.
[f]Activity for six fuel rods.
N/A = Data not available.

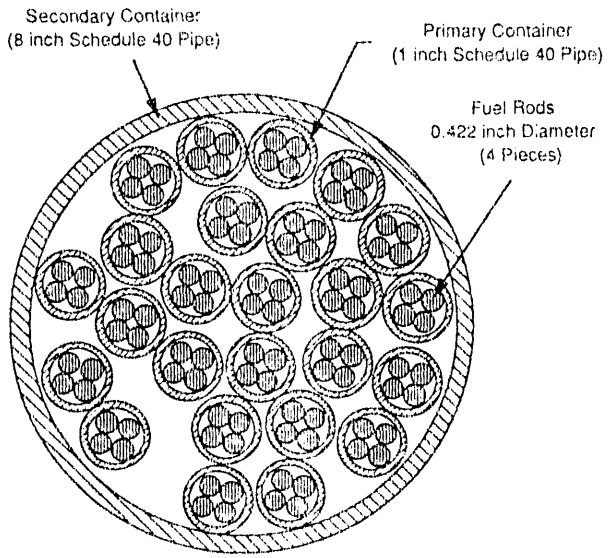

Fig. 4.

Diagram of the Primary and Secondary Fuel Storage Containers

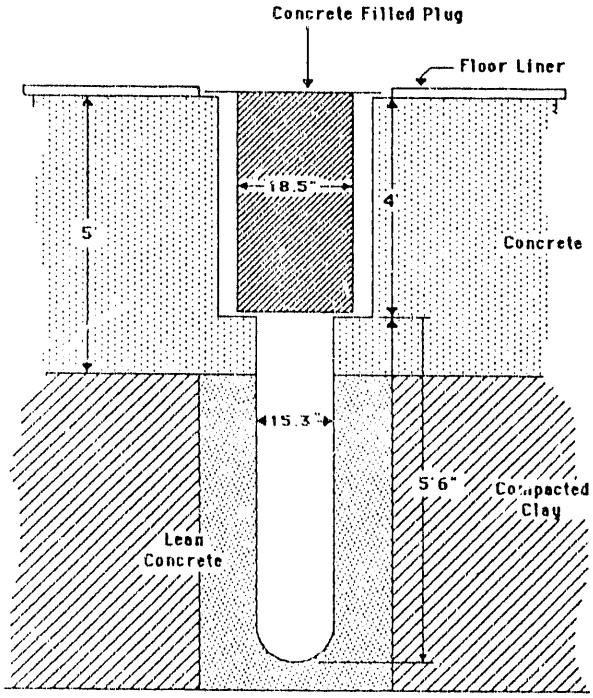

Fig. 5.

Fuel Storage Pits in Shielded-Cell Facility

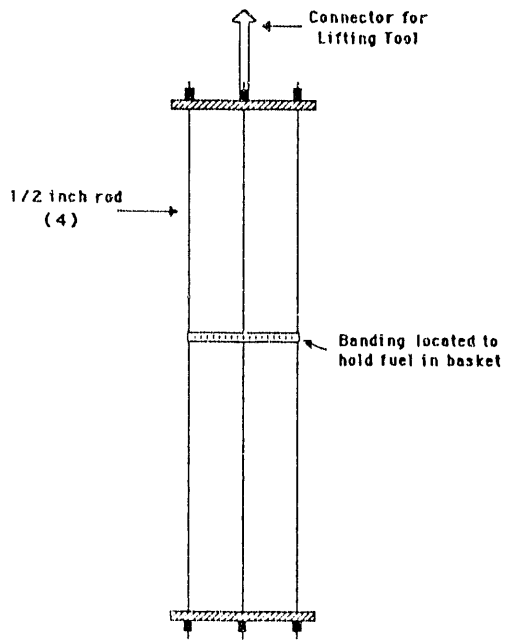

Fig. 6.

Fuel Hanger Storage Basket

B. Shear Cell

1. Process Description

The first step in processing fuel for the Hot Demonstration Program is to retrieve one fuel rod from a storage pit and transfer it to the shear cell. In this cell, the fuel segments are removed from the primary container and placed onto the shear bed. Each rod is then sheared into sections, where the length of each piece is equal to one-half the fuel rod diameter.* Based upon LWBR-POB processing experience, this size is adequate for leaching the fuel from the cladding. The fuel segment length determined for the Hot Demonstration Program is approximately 0.30 in.

As the fuel is sheared, it drops into an aluminum container that is 1.5 in. in diameter and 6-in. long and weighs 12 g empty. Based upon LWBR-POB experience, approximately six aluminum cans would be required to contain each fuel rod. The exact number of cans depends upon the rod diameter and the packing of the sheared fuel into the cans.

After filling with fuel, each can is capped, labeled, and returned to one of the storage pits. Labeling is important since both uranium and plutonium are special nuclear materials that require detailed accountability records. The contents of each can is also needed for subsequent processing steps. Information documented in a log book would include the specific fuel rod sheared, the section of the fuel rod contained in the can, and the estimated mass of uranium and plutonium.

Shearing of one fuel rod is expected to take an average of 4 h and to require two people to operate the equipment. The high degree of accuracy required in shearing LWBR-POB fuel is not needed for the hot demonstration. Therefore, the 4-h estimate is much lower than the shear time experienced in the LWBR-POB Project.

Following the shear step, the fuel would be returned to the storage pit and placed in a basket modified to hold aluminum cans. Security concerns dictate the returning of filled cans to a pit before the shearing of another fuel rod. A mass limit on the amount of plutonium and uranium located outside of the storage pits is required for operation in the shielded-cell facility; returning the sheared fuel lowers the mass of special nuclear material outside the high security of the pits. Instead of storing the fuel, the cans may be transferred to the dissolver cell. Depending upon the Special Nuclear Material (SNM) Inventory and the availability of operators, fuel dissolutions may be completed at the same time that another rod is being sheared.

---

*This automatic, remotely operated shear was fabricated for the LWBR-POB Project and is capable of handling fuel rods up to 12 ft in length and 0.30 to 0.83 in. in diameter. Modification to handle larger rods could be easily made [PARKS, FAGAN, GRACZYK].

2. Cell and Equipment Modifications

Modifications required in the shear cell include the following: replace control air lines, service hydraulic system, change cell filters, design and fabricate new shear inserts, and simplify the LWBR-POB shear operating program to increase the speed of shearing. Modification of the shear operating program would probably include a change in the calibration portion of the program. For the LWBR-POB effort, the calibration procedure was very involved and time-consuming since fuel weight and length measurements were very important. For the Hot Demonstration Program, this accuracy is not needed.

C. Dissolver Cell

1. Process Description

The next step is to dissolve the sheared fuel. Two independent dissolution systems are located in the dissolver cell.* Both dissolvers, which hold a maximum of 3.5 L, are lined with tantalum to resist a variety of dissolution reagents.

Following the transfer of fuel into the dissolver cell, two of the aluminum cans (containing fuel) are placed into the dissolver basket, which is then inserted into the dissolver vessel. A basket is needed to remove the Zircaloy cladding material, which is not dissolved, from the dissolver vessel. Without the basket, removal of the cladding would be very difficult. This operation assumes that the aluminum can will be added to the dissolver vessel.

In the initial stages of the program, it was thought that the fuel could be dumped from the cans into the dissolver. With this method, it was believed that one whole rod could be charged to the dissolver and processed in one batch. This method created several problems. Since the cladding needs to be retrieved, a charging basket is needed. The shape of the dissolver, shown in Fig. 7, precludes several different designs for a basket. (The bottom of the dissolver vessel is smaller in diameter than the middle portion, and the dissolver diameter at the top flange is about the same size as the lower portion.) With the basket held over the dissolver vessel (or in the dissolver), dumping the fuel from the can would be difficult. Since the sheared fuel is very dusty, the dust would create a contamination problem. The consequences of dumping a portion of the can's contents into the dissolver cell (i.e., missing the dissolver) is even a greater problem. In addition, because the lid on the fuel can is difficult to remove, it is possible that fuel would be spilled while the lid was being removed. (The top needs to be tightly closed to prevent spilling the contents if the can is dropped during transit.) After the fuel had been dumped, the can would still be coated with residual fuel and, therefore, highly radioactive. The cans would have to be rinsed, the liquid disposed of, and then the cans thrown away as contaminated or suspect waste.

---

*In the dissolver cell, twin tantalum dissolvers were available from the LWBR-OB Project. These dissolvers were capable of operations at elevated temperature and pressure (~200° C and 125 psig) [LEVITZ, GRACZYK]

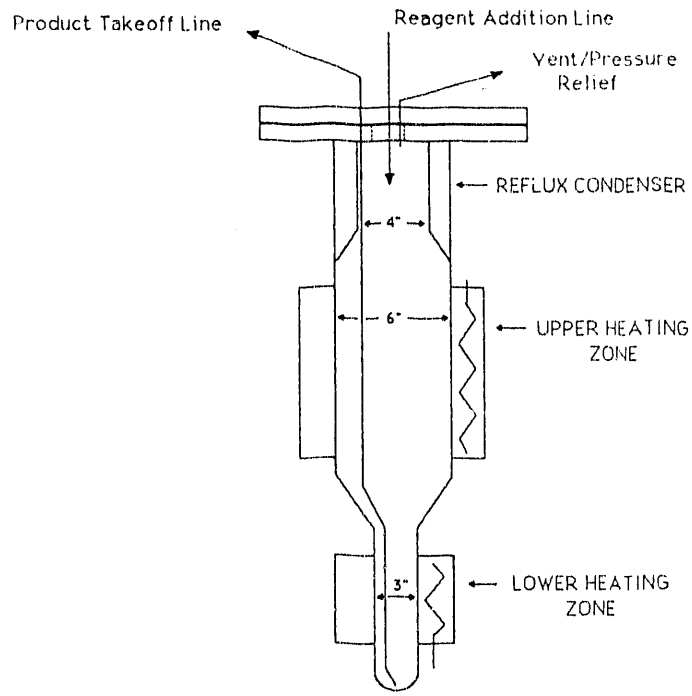

Fig. 7. Schematic of Dissolver Vessel

Dissolving the aluminum can with the fuel does not appear to cause a problem. Because Hanford Current Acid Waste (CAW) (one type of waste to be tested) typically contains 0.54M aluminum [WALSER], the aluminum cans could be used as a source of aluminum. Although specific dissolution flowsheets were not specified, it was expected that two cans would be dissolved in one dissolution, and that three to four dissolutions would be needed to dissolve each fuel rod.

As mentioned above, specific details on the fuel dissolution flowsheet were not determined. It is expected that these flowsheet conditions would be less severe than those in the LWBR-POB Project, in which irradiated ThO_2/UO_2 fuel was dissolved. The LWBR-POB Project involved charging one aluminum can to the dissolver, then adding 1.0 to 3.5 L of the dissolution reagent to the vessel. The temperature was then increased to 195 °C and the pressure to 125 psi. These conditions were held for approximately 4 h. This step was followed by a second dissolution with 1 L of solution at the same temperature and pressure for 3 h. The purpose of this second dissolution was to dissolve the residual uranium that remained in the vessel; dissolution of the fuel was typically greater than 99.99% [GRACZYK]. This same general procedure would have been used in the Hot Demonstration Program.

For accountability purposes, each batch of solution would be sampled and analyzed for both uranium (U-235) and plutonium. Sampling is required for two reasons. First, limits are set on the mass of both plutonium and uranium that can be handled outside of the storage pits.

Second, the composition of each batch is needed to adjust the PUREX flowsheet and/or the solution composition.

Before the solutions are transferred from the dissolvers to the 370 L storage tanks, the solution is filtered to remove any undissolved solids. This step prevents undissolved fuel solids from settling during the solution's storage. The volume of solution stored in these tanks will be limited by the mass of uranium and plutonium in solution and the amount of fuel being handled in the rest of the shielded-cell facility (including the shear cell, the contactor cell, and the waste processing cells).

2. Cell and Equipment Modifications

Modifications required for the dissolver cell include:

a. Replace air lines to control valves.

b. Modify the fuel charging baskets so that two aluminum cans can be added at the same time. (The existing design only holds one can.)

c. Replace cell filters.

d. Replace torn boots on master-slave manipulators.

e. Repair master-slave manipulators.

f. Replace reagent and product lines.

g. Evaluate changes to the off-gas system piping to increase the gas volume holdup within the system. (This would permit slower controlled radioactivity releases to the environment.)

h. Modify the dissolver operating program to eliminate unnecessary procedures and to implement new dissolution flowsheets.

i. Rework the waste tank. (This involves rinsing and cleaning the system followed by modifying the piping to pump directly to the transfer tank.)

j. Design and install a system to remove solids from the dissolver product.

D. Contactor Cell

1. Process Description

In the contactor cell, ANL-designed centrifugal contactors would be used to perform the desired separations. The process requires two banks totaling 48 centrifugal contactor stages. In the first bank of 24 stages (the PUREX process), the majority of the uranium and plutonium is

extracted from the dissolver product. In the remaining stages in the first bank, the organic phase is scrubbed to remove co-extracted fission products, then stripped to remove the uranium and plutonium. Two additional steps, a carbonate wash and an acid rinse, would be used to clean up the organic phase, which is then recycled back to the extraction section.

The primary purpose of PUREX processing for most of the planned work is to prepare appropriate feed solutions for demonstrating the TRUEX process. In later work, plans were to demonstrate a modified-PUREX/TRUEX process, where the two processes would be closely coupled to produce an efficient single process for recovering plutonium and uranium from dissolved fuel. A detailed description of the modified-PUREX/TRUEX process is given in Appendix C. Because the PUREX process is only a tool to produce specific feed for TRUEX process demonstration, it is possible, and perhaps beneficial, to simplify the PUREX section. For example, a single strip could be used for the recovery of both uranium and plutonium. However, for this report, we assumed a two-strip process.

The raffinate solution from the extraction section of the PUREX process would be fed to the TRUEX process. In the TRUEX process contactor (the second bank of 24 stages), additional processing of the PUREX raffinate would produce a raffinate that could be classified as a nonTRU waste. In the extraction section, the actinides and rare earth fission products (REFP) would be extracted into the organic phase. A scrub section would remove co-extracted nitric acid, iron, zirconium, and molybdenum from the TRUEX solvent. Two strip operations would then be performed. In the first strip section, REFP, americium, and curium would be back-extracted from the solvent. The second strip would recover plutonium from the organic phase. As in the PUREX process, the solvent would be washed with sodium carbonate and dilute nitric acid before being recycled back to the extraction section. Any uranium extracted into the organic phase would be removed in the carbonate wash. Typical flow rates and volumes for both the PUREX and TRUEX sections are given in Table 4.

These extraction processes would yield several product (or waste) streams. All of these streams would be transferred from the contactor cell to other cells for additional processing and disposal. Details on waste processing are contained in a later section of this report.

2. Cell Modifications

Modifications needed in the contactor cell include:

a. The contactor cell windows must be filled with a 71% zinc bromide solution. This solution needs to be processed to remove impurities and then pumped into the windows.

b. Two new extended-reach master-slave manipulators are needed, and the six existing master-slave manipulators need refurbishing.

c. Existing filter housing should be moved so that more room is available for the installation of the contactor equipment.

Table 4. Typical System Flow Rates and Process Volumes for PUREX and TRUEX Processing

			Flow Rate into Contactors			Flow Rate from Contactors		
Section	Code	O/A Ratio	Typical, mL/min	Range,[a] mL/min	Volume, L	Typical, mL/min	Range,[a] mL/min	Volume, L
PUREX Section								
Organic[b]	AX		240	200-300	5	240	200-300	5
Extraction	AF	1.5	160	100-200	96	200	120-260	120
Scrub	AS	6	40	20-60	24	--	--	--
Strip 1	BF	6	40	25-75	24	40	25-75	24
Strip 2	CF	0.8	300	240-360	180	300	240-360	180
Alkaline Wash	RF	2	120	30-360	5[c]	120	30-360	5[c]
Acid Rinse	SF	2	120	30-360	5[c]	120	30-360	5[c]
TRUEX Section								
Organic[b]	DX		100	60-130	5	100	60-130	5
Extraction	DF	0.5	200	120-260	120	220	132-286	132
Scrub	DS	5	20	12-26	12	--	--	--
Strip 1	EF	1	100	60-130	60	100	60-130	60
Strip 2	FF	2	50	30-65	30	50	30-65	30
Alkaline Wash	WF	2	50	30-65	5[c]	50	30-65	5[c]
Acid Rinse	XF	2	50	30-65	5[c]	50	30-65	5[c]

[a]Range for TRUEX based upon PUREX AF, AS range.
[b]Organic flow rate sets all other flows using the appropriate organic/aqueous ratios.
[c]Alkaline wash and acid rinse solutions recycled.

3. Contactor Cell Design

a. General Criteria

The contactor system could be designed so that only one person need participate in "hands-on" operation for each process (PUREX or TRUEX). This operating requirement is important since only one pair of master-slave manipulators is available at each window. This operating philosophy is different from previous contactor tests completed here at Argonne. With the contactor placed in a glove box, four operators could surround the unit and perform their assigned tasks (sample collection and visual observation) simultaneously. The purpose of these earlier tests was to measure steady-state concentrations of important species in each exiting stream and, after shutdown, in each stage. Therefore, the tests could be completed in a short time, usually less than one hour, and with a relatively small volume of solution. For the Hot Demonstration Program, these same operations would still need to be completed, but not all at the same time. Also, tests were planned to investigate the effects of solids buildup and radiolytic damage on the solvent. Therefore, the Hot Demonstration tests would typically take 10 h to complete.

Floor space in the centrifugal contactor cell, shown in Fig. 8, measures 14 ft by 18 ft. Feed tanks, level and temperature instrumentation, pumps, sample stations, and product tanks would be located in the cell. Feed tanks for nonradioactive reagents would be located outside the cell, with the solutions pumped into the cave through existing penetrations. Feed control (metering pumps) for nonradioactive solution would also be located outside of the cell. All of these lines require check valves to prevent radioactive solutions back-flowing out of the cell and into the operating area.

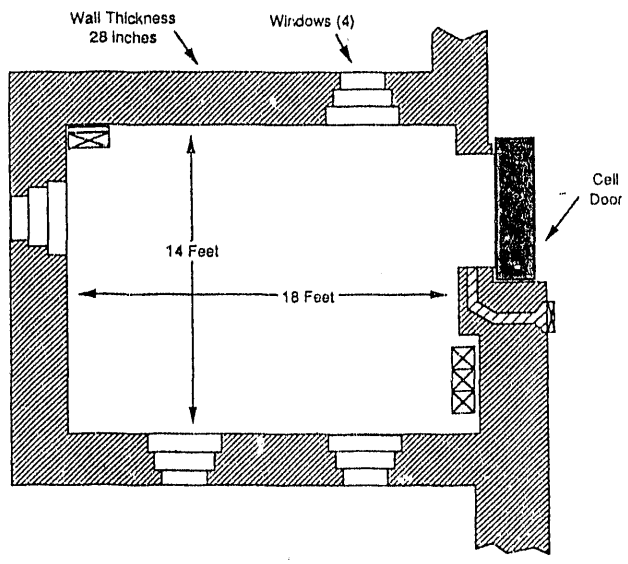

Fig. 8.

Dimensions of the Centrifugal Contactor Cell

The operating areas in the contactor cell are labeled in Fig. 9. In this figure, the PUREX and TRUEX processing areas are identified. This is where the centrifugal contactor stages would be located, with each process being centered in front of a window. The equipment repair area should be kept fairly clear of equipment so that there is room for repairing equipment, preparing sample bottles, and transferring them into and out of the alpha barrier. The alpha barrier prevents contamination from spreading through the rest of the facility.

Figure 10 shows typical aqueous feed and product lines for one of the solvent extraction processes. The feed tank is outside the contactor cell, and a metering pump controls the feed rate to the centrifugal contractor in the cell. Upon exiting the contactor, a centrifugal pump transfers the product solution to an effluent tank in the cell with the contactor. Both tanks have mixers, level instrumentation, thermocouples, and vent lines. A second centrifugal pump in the cell pumps solution from the effluent tank to a transfer drum for shipment to other cells in the facility. Additional details on each of these items are given below.

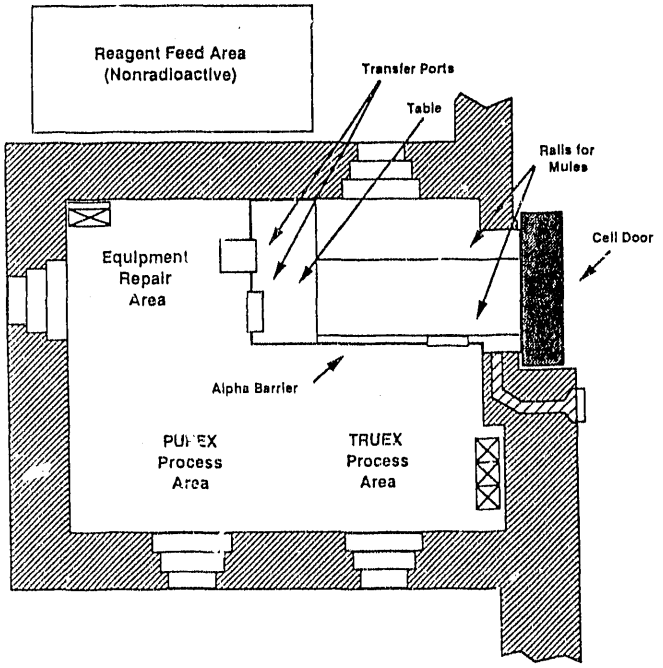

Fig. 9. Centrifugal Contactor Cell Operating Areas

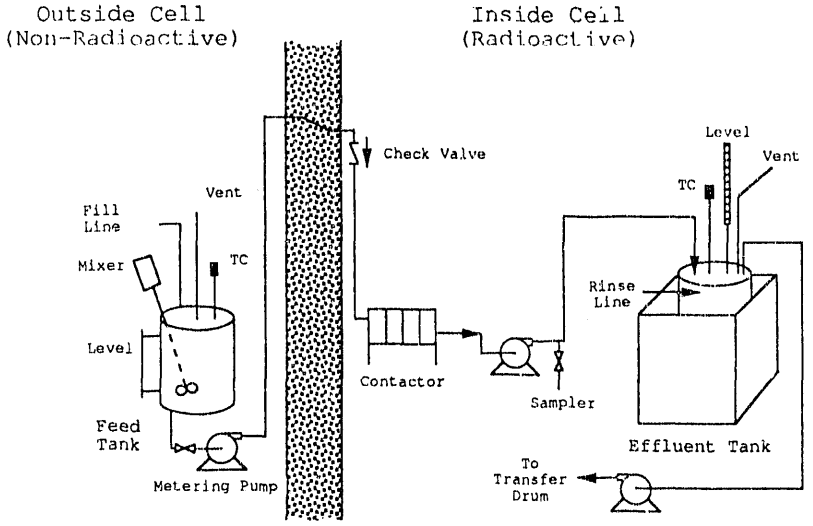

Fig. 10. Typical Aqueous Feed and Product Lines

b. Cell Equipment

(1) Alpha Barrier

To prevent the spread of contamination from the cell to the rest of the cave complex, an alpha barrier is in the cell. Unistrut material frames the wall, and plastic sheets (Lexan or polycarbonate) are fastened to the frame to enclose the cell area. The location of the alpha barrier is shown in Fig. 9. This barrier seals off the cell from the rest of the cave complex and prevents contamination of the rest of the facility. To complete the seal between the contaminated area and the rest of the facility, the barrier is attached to both the walls and ceiling.

Two ports are built into the alpha barrier: pass-through port for transfer of nonradioactive equipment into the cell, and a bag-out port for transfer of radioactive materials out of the cell. The location of the alpha barrier and the pass-through port in this cell is important. One of the windows and a pair of master-slave manipulators are outside the alpha barrier. At this station, an operator can lift equipment that was transferred into the cell on one of the mules (radio-controlled cart) onto the table and then into the transfer port. A second window and pair of manipulators inside the alpha barrier (by the equipment repair area) can then reach this equipment in the transfer port. The side wall of the alpha barrier must be outside the rails to allow the mule to enter the cell.

Within the alpha barrier is a 3-ft-high table made from Unistrut and stainless steel plate. Stainless steel plates (2-ft square by 1/8-in. thick) are on top of the frame to form the table surface. Joints in the steel plate are sealed to eliminate this potential contamination trap. The table raises the working surface in the cell up from the floor, which permits a better view of the equipment and makes it easier to use the manipulators.

(2) Cell Ventilation

Ventilation for the cell, shown in Fig. 11, comes from two sources. First, approximately 900 cfm of air is exhausted by the ventilation system from the cell interior. The second source of ventilation, about 300 cfm, is drawn from a separate blower in the cell. Two prefilters draw supply air from the operating corridor to the cell (the cells are kept at a slight vacuum). One prefilter is in the cave operating corridor, while the second is in the alpha barrier (see Fig. 11).

(3) Tanks

In the contactor cell, 13 tanks are required to contain solutions for the two solvent extraction processes. Table 5 lists the tanks required, their volume, and their location (either in-cell or out-of-cell). Each tank in the cell would have a square drip pan to prevent a leak from spreading and contaminating the rest of the cell. To help increase the usable area within the cell, tanks and drip pans would be installed on the floor of the cell so that only the

tops of the tanks are above the table top. This makes operations that require use of the master-slave manipulators much easier to perform since the tanks are not in the way. The top edge of the drip pan would be slightly higher than the table top to prevent spilled solutions and equipment from falling into them. The round tanks and square drip pans would both be fabricated from stainless steel. Square drip pans are easier to install in the cell since the Unistrut frame easily fits around the tanks. Square drip pans also minimize the width required for these tanks. Drip pans that are not high enough to stick up above the table top can be supported from below with lead bricks or with Unistrut supports.

Ten additional tanks would be outside of the cell for storage of nonradioactive feed solutions. The design of the nonradioactive feed area was not completed. Thus, we did not address questions such as whether each tank should have its own drip pan or whether it is easier to install one (or more) drip pans to contain all of the vessels.

(4) Pumps

The contactor cell requires both metering and centrifugal pumps. Metering pumps control the flow rate of solutions to the contactors. Additional valves or rotameters in the cell are not used to control these flows, since reading these types of meters would be too difficult and the additional flow control is not required. For the feed tanks outside the cell, metering pumps could probably be used, though specific details have not been determined.

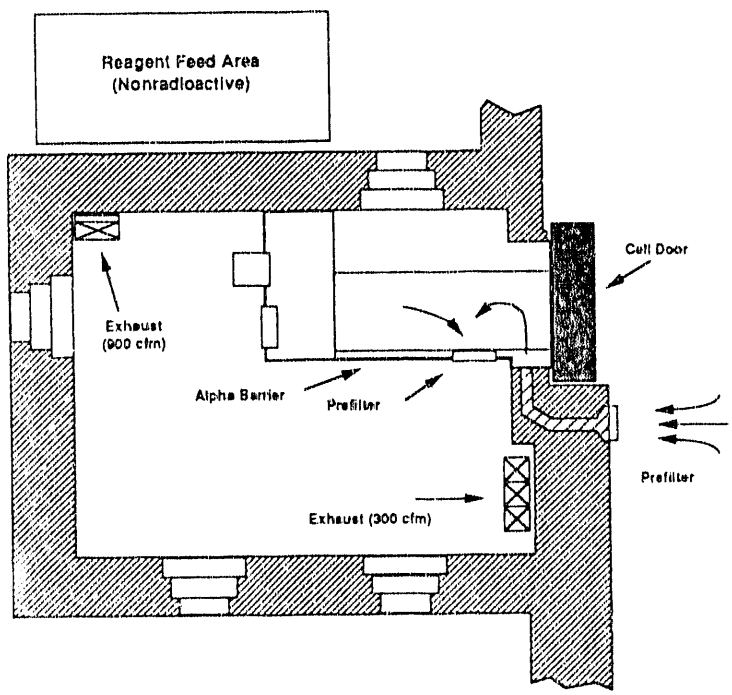

Fig. 11. Centrifugal Contactor Cell Ventilation

Table 5. Process Vessel Volumes and Dimensions

	Feed Tank				Product Tank			
Stream	Code	Tank Volume,[a] L	Tank Dimensions,[b] in.	Tank Location[c]	Code	Tank Volume,[a] L	Tank Dimensions, in.	Tank Location[c]
PUREX Section								
Organic	AX	5	N/S[d]	In	-	-	-	-
Extraction	AF	140	22.75x24	In	AW	180	22.75x30	In
Scrub	AS	42	16x18	Out	-	-	-	
Strip 1	BF	52	16x18	Out	BW	52	16x18	In
Strip 2	CF	250	28x30	Out	CW	250	28x30	In
Alkaline Wash	RF	10	N/S	In	-	-	-	-
Acid Rinse	SF	10	N/S	In	-	-	-	
TRUEX Section								
Organic	DX	5	N/S	In	-	-	-	In
Extraction	DF	180	22.75x24	In[e]	DW	200	22.75x36	-
Scrub	DS	18	N/S	Out	-	-	-	-
Strip 1	EF	90	18x24	Out	EW	90	18x24	In
Strip 2	FF	45	16x18	Out	FW	45	16x18	In
Alkaline Wash	WF	10	N/S	In	-	-	-	-
Acid Rinse	XF	10	N/S	In	-	-	-	-

[a]Tank volumes calculated based upon maximum predicted flow rate of each stream plus 15% freeboard. This volume was then adjusted upwards, when necessary, to correspond with standard tank sizes.
[b]Diameter times height.
[c]In or out of the contactor cell.
[d]Not specified.
[e]Same tanks as AW (raffinate from PUREX section).

Centrifugal pumps would be in several locations where flow control is not required. Generally, these pumps would be installed on the aqueous raffinate lines exiting the contactors. For these locations, metering pumps are not needed. In fact, they should not be used since they may possibly pump air through the contactors, which would increase the solvent evaporative losses to unacceptable levels.

Two types of metering pumps were evaluated: Masterflex pumps (Cole Palmer, Chicago, IL) and FMI pumps (Fluid Metering, Inc., Oyster Bay, NY). Both of these pumps have been tested in radioactive environments. However, the FMI pumps do not have the remote speed (flow rate) control that is necessary for our work. Because of the amount of equipment needed in the cell and the number of pumps required, the pumps cannot all be located in front of the windows where they can easily be seen. Therefore, remote control of the flow rates is an important design consideration. FMI pumps are acceptable for use as the nonradioactive feed pumps outside the cell.

Masterflex pumps were used in the cells during LWBR-POB operations, and it has been demonstrated that the tubing can be changed remotely. The

advantages of using Masterflex pumps include: (1) each pump can operate over a fairly wide range of flow rates, (2) adjusting and controlling flow rates are easy, (3) the tubing and the pump can be replaced remotely, and (4) the speed control can be outside the cell. Pump heads with two different sizes are required for the process. Approximately eight metering pumps are needed inside the contactor cell. An additional ten metering pumps are needed outside the cell.

For the centrifugal pumps, model number J-7001-00 (Cole Palmer, Chicago, IL) was considered. These pumps have the required flow rates, are fairly inexpensive, and have a small footprint. Twelve of these pumps are needed.

(5) Centrifugal Contactors

Recommendations have been made on how the centrifugal contactor should be oriented in the cell to improve remote operations. In addition, design changes needed for the contactor were identified.

(a) Orientation

The centrifugal contactor cell would have two banks of contactors with 12 stages in each bank for both the PUREX and TRUEX processes. The best orientation of these contactors is perpendicular to the cell windows, making both sides of the contactor stages accessible. Figure 12 is a flow diagram of the contactor that shows its orientation in the cell for the PUREX flowsheet.

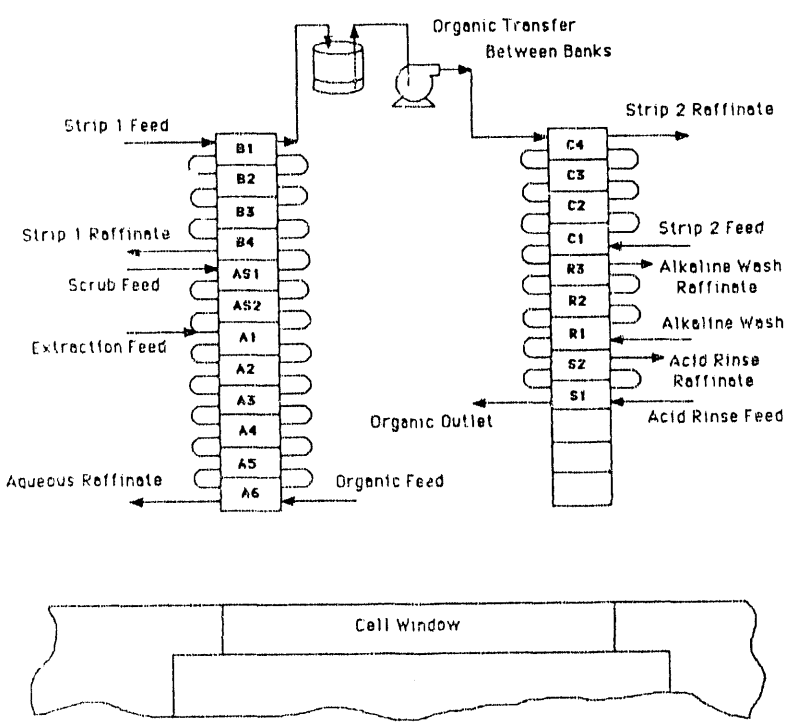

Fig. 12. Centrifugal Contactor Flow Diagram for the PUREX Flowsheet

The contactor design includes banks of four stages, with a connector that ties the banks together. The connector is designed for remote handling, since a bank of 12 contactor stages would be too difficult to move around the cell. A method is needed for attaching a sling to each set of four units since it may be desirable to move them to the maintenance area of the cell for additional work. Each motor/rotor assembly requires a lifting bail that is suitable for remote handling. A contactor has been designed for remote operation in either a shielded-cell or glove-box facility. Two 4-stage contactors with 4-cm (~1.6-in.) dia rotors were fabricated in ANL Shops and were tested in FY 1988. Design advances demonstrated with these units were incorporated into 10-cm (~3.9-in.) units fabricated for use in the TRUEX facility in the Hanford Plutonium Finishing Plant (PFP).

Figure 12 illustrates typical aqueous lines for a process which consists of six extraction stages, two scrub stages, four stages insolvent cleanup. As this figure suggests, the aqueous side of the contactor is much more congested than the organic side.

In Fig. 12, the organic phase is transferred through the interstage lines on the inside of both banks of contactor, while the aqueous phase is transferred through the lines located outside of the contactors. This arrangement was chosen to eliminate as much piping as possible from the area between the two contactor banks; this permits better access to the contactors. After being pumped into the first stage, the organic phase flows through the bank where it exits at the end of the bank. Since each stage of a centrifugal contactor pumps solutions to the next stage, the only piping needed is the stage-to-stage connections.

For the aqueous solutions, feed and product take-off lines are required for each operation performed in the contactor (i.e., extraction, scrub, strip). The storage vessel and pump shown in Fig. 12 are used for transferring the organic phase between the two banks of 12 stages. This feature is included since the distance between the two banks may preclude the use of gravity for this transfer. The small vessel collects the organic overflow from the first bank, which is then pumped to the next stage. The tank eliminates air from being pumped from the contactors, which could increase solvent evaporation losses. A similar setup is not shown for the aqueous phase since transfers between the two banks are not required for this setup. However, if one of the sections (such as the strip section) is split between the two banks, then a similar setup for the aqueous phase is required.

(b) Interstage Connections

The interstage connection piping provides an easy way to connect stages together and to change the number of stages in a particular section. The pipe jumpers would be attached to each stage with Teflon FEP tubing slip joints. This connection would have a short length of FEP tubing to connect two pieces of stainless steel. To make the joint leak tight, the FEP tubing is heated with a heat gun just prior to slipping it over the stainless steel pipe. When the FEP tubing cools, it contracts and a leak-tight seal is formed. Compression fittings have been evaluated but the slip joint would be better for our purposes because the stage operations would be changed frequently.

To check the radiation effects on this type of joint, we fabricated two test specimens and placed them in the gamma irradiation facility. When irradiated to 1×10^5 R, the joint remained tight. When the dose was increased to 2×10^5 R, the connection became loose, but tightened back up 30 min after it was removed from the shielded cell. Since 1×10^5 R is expected to be greater than the dose received in one year of operation in the contactor cell, this type of joint should be acceptable.

One possible problem with this type of connector is lining up both ends of the stage-to-stage connection tubing when installing the connector remotely with manipulators. To help with this alignment, it was proposed to add tube guides on each contactor inlet and outlet port. A preliminary mockup design worked adequately, though tests in a cell are needed to verify that this design is satisfactory.

(c) Support Structure

One important modification that was made in the contactor design was with the support structure. The old design, sketched in Fig. 13, had an angle iron support structure with support legs on both sides of the unit. This design limits the room below the

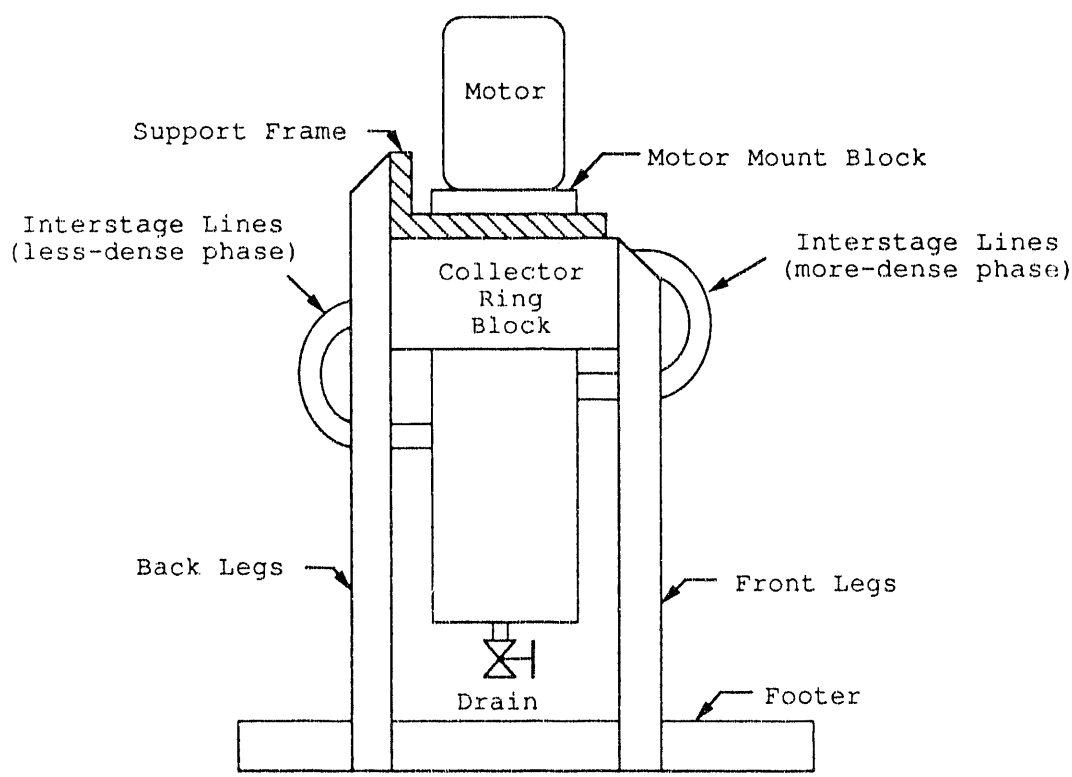

Fig. 13. Angle Iron Support Frame

contactors (where stage samples are collected) and hinders visibility when one is installing and removing the stage-to-stage piping. These difficulties were eliminated by use of a box-beam support design, which is sketched in Fig. 14. In this design, the legs are on one side of the contactor and the contactor is raised.

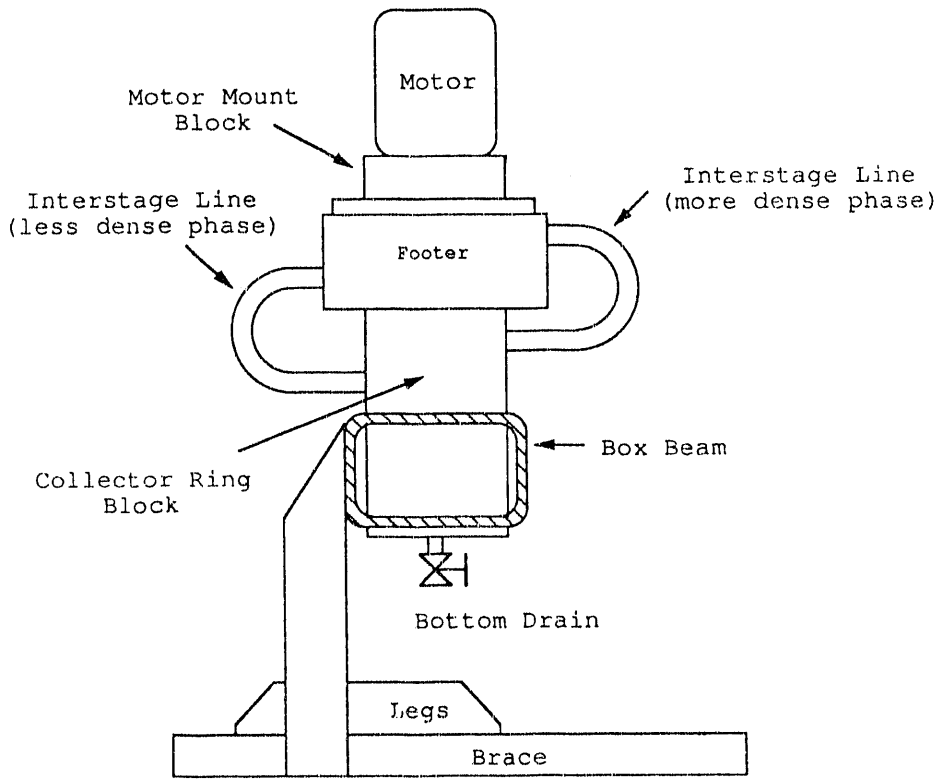

Fig. 14. Box Beam Support Frame

(d) Liquid-Level Detectors

Liquid-level probes are needed for each stage to detect when the liquid in the contactor reaches a high level, indicating that the stage is not operating correctly (e.g., the motor has failed or the rotor is jammed). In previous contactor designs, a visual method of observing the level in each standpipe was adequate since the units were located inside a vac-frame hood or glove box. However, for this application, a remote method of detecting the liquid level was required. While a final probe design was not chosen, we identified several candidate probe designs: gas bubblers, mechanical floats, capacitance probes, ultrasonic detectors, thermistors, and infrared devices. Of these designs, the thermistor device and the infrared probe appear to be best suited for this application. Both probe types require laboratory tests to determine whether they operate as advertised, have acceptable radiation resistance, and are adaptable to remote handling.

(6) Instrumentation

(a) Level Monitors

Level monitors are needed on both feed and raffinate tanks, since level readings are used to determine the flow rates for all of the solutions in both extraction processes. For each stream, level measurements are collected for both the feed and product tanks and the results compared.

Two general types of level instruments were considered, visual and electronic. The first type relies on visual observation and manual recording of the levels in each tank. Sight glasses (or liquid level gauges) are typically used for this type of application. Sight glasses would be installed on each tank and readings would be performed on a routine basis to monitor the flow rates. Since the storage tanks are installed in drip pans and both are installed below the table top, the sight glasses would be installed on the top of each tank. For top installations, a float which rides up and down with the tank level would be inside the tank. A rod fastened to the float would pass up through the top of the tank and indicate the relative position of the float. Calibration curves would then be used to calculate the tank volume.

Sight glasses have several drawbacks. First, for our application, they will stick up above the tank top several feet (height depends upon tank depth) and will, therefore, hinder the movement of material in the cell. Reading the scales may also be difficult, especially if the tank is located at a sharp angle from the window (the window distorts the view when looked through at a sharp angle).

The second type of level instrumentation--electronic level transmitters--produces an output signal that can be read by an instrument outside the cell. These types of instruments rely on ultrasonics, floats, or capacitance. Of these three, ultrasonics appear to be the most suitable for our application.

With ultrasonic probes, high frequency pulses are directed upwards through the liquid. These pulses are reflected back by the liquid/air interface, and the echo is detected and processed by the appropriate electronics. This signal is converted into a digital representation of the distance between the source and the surface. The cost of a typical unit manufactured by Magnetrol International (Downers Grove, IL) is between $1500 and $2000. Problems with this type of unit are created by the disruption of the echo. This can be caused by high agitation, foam at the interface, entrained air, and suspended solids. It is not expected that any of these potential problems would prove to be significant in our system.

Capacitance probes were incorporated into the dissolver cell during LWBR-POB operations and did not perform as expected. It is believed that salts build up on the probe and create spurious readings. For example, one of the probes in the dissolver cell consistently recorded a zero level, even when the bank was completely full.

(b) Temperature Measurement and Control

Thermocouples would be installed on each of the feed and product tanks to monitor the solution temperatures throughout a demonstration run. We did not address temperature control of these tanks in any detail. The question that needs to be determined is whether solutions in the feed tanks must be controlled at specific temperatures or whether the small variations expected in ambient temperature are acceptable. Because the partitioning of material between the two liquid phases (organic and aqueous) is dependent upon temperature, solution temperatures are important for modeling the run. With temperature control, tests at various temperatures could be investigated. If temperature control is wanted, then the specific tanks to be controlled must be identified and the method for attaining these temperatures investigated. The addition of this equipment would complicate the design and operation, thereby increasing the system cost.

(c) Flow Rate Control

Flow rates for the various feed streams would be controlled with metering pumps. These flow rates are determined by monitoring the change in the appropriate tank levels over a short period of time. To start the processes at the correct flow rates, all of the pumps must be calibrated. Once the test is underway, minor adjustments to the flow rates can be made after monitoring the tank levels.

Several types of pumps were evaluated and are discussed in Sec. II.D.3.b.(4). It is felt that additional flow control or monitoring is not necessary for the "once-through" aqueous streams. However, additional flow monitoring may be necessary for the streams that are recycled, which include the two organic streams, the carbonate wash, and acid rinse streams. Details of flow monitoring for these specific solutions were not completed.

(d) Mixers

For the initial design, mixers are included with every tank in the system. However, some tanks may not require a mixer. Therefore, a more complete review of each tank is needed to evaluate whether or not a mixer should be installed. For tanks in the cell, mixers are needed in the initial set-up phase because of the difficulty in retrofitting the tanks with mixers after the system has been operated with radioactive solutions. On tanks outside of the cells, the addition of mixers is less difficult. Mixers are needed to suspend any solids in solution, mix reagents, improve solution homogeneity, and simplify decontamination procedures. Electric or air-driven motors, mounting brackets, shafts, and propellers are available from a number of vendors (McMaster-Carr, Chicago, IL; EMI Incorporated, Clinton, CT; Cole Palmer Instrument Co., Chicago, IL). For the tanks in the cell, nine mixers are required.

(7) Organic Density Measurement

In both the TRUEX and PUREX processes, the organic solvents are recycled during operation to limit the volume of solvents required. If one of the components in

the solvent has a higher evaporative rate or increased solubility, the composition of the solution will change, and this will affect how well the process operates. To control the TRUEX solvent composition within acceptable limits, a method is needed that can quickly measure the solvent composition. Since laboratory tests with the TRUEX-TCE solvent have shown that density can be used to predict the composition of this mixture, a density meter is included in the contactor cell design. This instrument may operate on either a continuous or batch basis; additional laboratory tests are required to specify which method best suits this application. In addition to the density meter, a process may be required to remove the small amount of aqueous phase that is dispersed in the solvent. This step can probably be handled by a centrifuge, one of the centrifugal contactor stages, or a static separation device. Additional work is required to determine the effect that the aqueous dispersion will have on the solvent density and to specify the equipment to separate the two phases.

Once the solvent composition has been determined, it is expected that additional diluent (either NPH or the much more volatile TCE) will be added to the process solvent. Although this addition could be continuous, the expected small diluent losses (especially if the diluent is NPH) mean that batch additions would be adequate.

A second density meter may be installed in the contactor cell to monitor the density, and therefore the composition, of the PUREX solvent. If a monitor is required, a separate instrument would be installed to prevent cross-contamination of the solvents.

(8) Filters

Before solution is transferred from the dissolvers to the storage tanks (or the contactor cell), the solutions must be filtered to remove any residual fuel solids. The process needed to accomplish this filtration was not developed, though a filter paper or cartridge process would probably be acceptable. Centrifuges or a modified contactor could be used, though this would be a more complicated process and a second step would be needed to transfer the solids from the unit to another location. With filter papers or cartridge filters, high product clarity can be achieved. Disposal methods for these solids need to be evaluated. The results of this evaluation may determine how the suspended solids are removed. This filtration should eliminate the need for a filtration step in the contactor cell, unless some precipitation occurred during storage.

(9) Sample Stations

Several samples from the TRUEX process would be collected during a typical test. These samples would consist of a small volume of solution (5-10 mL) collected from a product take-off line. For this application, the sampler would consist of a valve located in the line from the transfer pump. With the valve open, the lowest resistance to flow would be through the valve and into the sample bottle instead of into the storage tank. The appropriate volume of solution would be collected, the valve closed, and the bottle removed. One problem with this design pertains to solution that remains inside the valve, which would contaminate the

next sample. As an alternative design, the sampler could be located upstream of the pump. When a sample is to be collected, the pump would be shut off and the valve opened. The head and momentum that the solution has upon exiting the contactor would fill the bottle. After sampling, the pump would be restarted before the valve is closed, thus pulling a small volume of air through the sampler. Laboratory tests are recommended before specifying which design works better.

In addition to sampling the process streams exiting the contactors, samples can be obtained through valves on the bottom of each contactor stage. These valves (48 in number) would be used at the end of a run to collect the solution that is contained within each unit. An analysis of this solution would provide important equilibrium data for each contactor stage. The centrifugal contactor support frame is designed to allow room beneath each unit to collect these samples.

(10) Utilities

Low-pressure air (20 psia) would be piped into the contactor cell. High-pressure air (50 or 100 psia) would not be required unless air-driven mixers are installed. As a contingency, high-pressure air lines may be routed into the cell. Distilled and treated water would be piped into the cell. The electrical power requirements for the cell equipment have not been examined in detail. Electric power is required to operate mixers, pumps, tank level instruments, centrifugal contactors, contactor level detectors/alarms, and other miscellaneous equipment. This power would have to be brought into the cell. All of the power lines within the cell would have to be hardwired to junction boxes and terminal strips. Plugs should be provided on all of the equipment in the cell, making it easy to disconnect a piece of equipment from the system for repair or replacement.

(11) Solution Transfer Tank

The aqueous feed to the PUREX process would be stored in 370 L storage tanks in the dissolver cell. This solution can be transferred to the contactor cell by installing a pipe between the two cells. This installation, however, requires (1) boring holes through concrete walls, (2) entering the shielded-cell facility, which has a high radiation field, and (3) adding shielding where the line crosses the central corridor.

To simplify this system, a transfer cart would be used to transport solutions between the two cells. For this design, a 130-200 L tank is included on one of the radio-controlled transfer carts or mules. To complete a transfer with this system design, solution is pumped from the storage tanks to the transfer tank, the transfer lines are disconnected, and the valves are closed to prevent spilling liquid from the tank when it is moved to the contactor cell. The tank and cart are then moved to the contactor cell, where a line is connected to the tank and the solution is pumped to the feed tank. Several variations to this system are possible and need to be investigated. These include (1) installing a pump on the transfer cart that would be used both to fill and empty the tank, (2) making solution adjustments in this tank, either in the dissolver cell or the contactor cell, and (3) using this tank as the feed tank. This last suggestion

is probably not feasible since the feed to the contactors would end when the tank is empty and more than one tank volume will be needed for a typical test. In addition, liquid level, temperature, and ventilation equipment are needed on this tank if it is to store solution during the test.

c. Equipment Layout

The initial equipment layout for the centrifugal contactor cell is shown in Fig. 15. This figure shows the locations of the centrifugal contactor, storage tanks, and pumps, but not the transfer lines, electrical connections, and sample testing. These latter items still need to be incorporated into the design. In addition, tanks for the solvent wash raffinates are not shown in this figure - their placement in the cell was not evaluated.

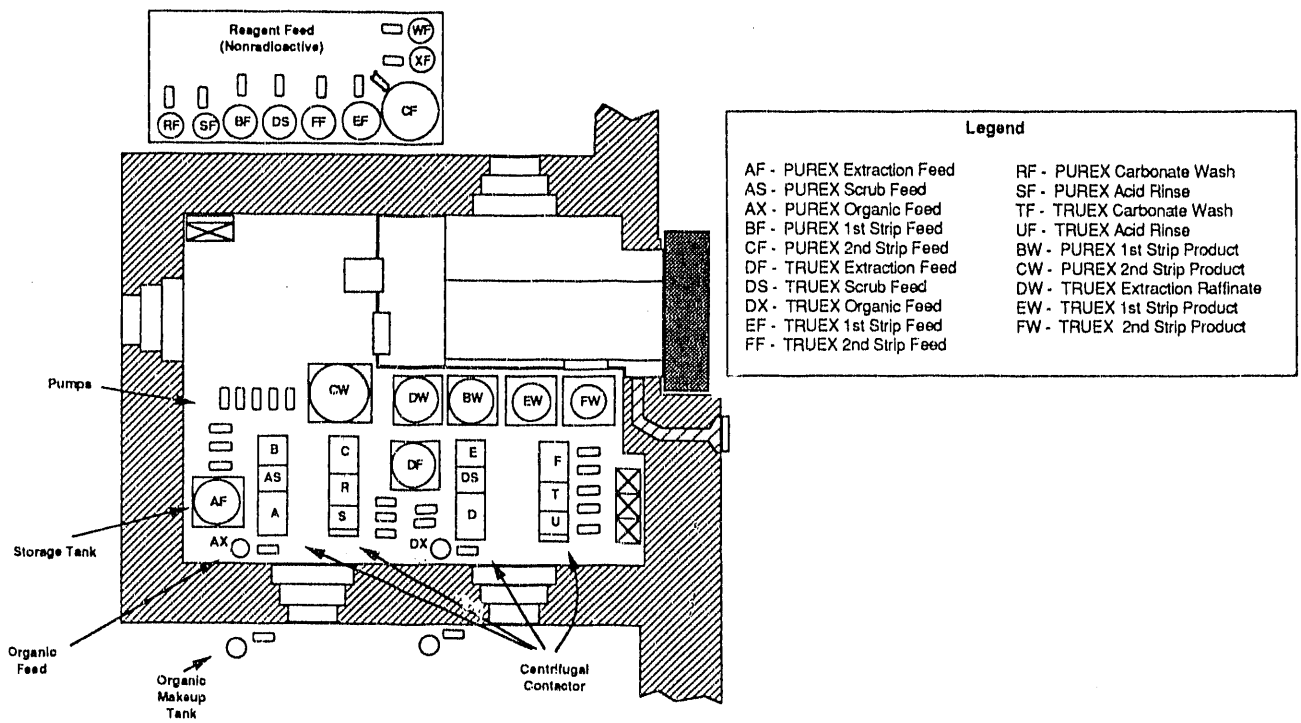

Fig. 15. Centrifugal Contactor Cell Equipment Layout

E. Waste Processing

The hot demonstration would produce five different waste streams: (1) cladding waste from fuel dissolution, (2) plutonium products from both PUREX and TRUEX processing and uranium product from PUREX processing, (3) americium and REFP from TRUEX processing, (4) nonTRU raffinate from TRUEX processing, and (5) spent solvent wash solutions from both PUREX and TRUEX processing. Table 6 shows the estimated volumes of the waste streams, concentrations of fissile materials, and the waste treatments being evaluated. The volume and composition of each waste stream were based upon the processing of ten typical fuel rods.

Table 6. Waste Stream Description and Disposal Methods

Waste Stream	Code	Initial Volume,[a] L	Composition[a]	Type of Waste	Treatment and Disposal Process[b]
Cladding	-	-	Zircaloy	nonTRU (low level)	Immobilize with cement[c]
TRUEX Raffinate	DW	132	Fission Products High β-γ	nonTRU (high β-γ)	Immobilize with cement
Pu/U Streams[d]	BW,CW, FW	234	[U] = 95 g/L [Pu] = 1.0 g/L	TRU	Evaporate, neutralize, absorb in vermiculite[c]
Am Stream	EW	60	[Am] = 8E-3 g/L [Pu] = 9E-6 g/L [REFP][e] = 0.2 g/L	TRU (low β-γ)	Immobilize with cement
Solvent Washes[d]	RW,SW WW, XW	20	[U] = 2 g/L	nonTRU	Evaporate, neutralize, absorb in vermiculite[c]

[a]Based upon processing 10 typical fuel rods.
[b]Waste treatment processes that were being evaluated.
[c]Mainstream with ANL waste disposal operations.
[d]Streams from PUREX and TRUEX combined.
[e]Rare earth fission products.

Where possible, the waste handling procedures should allow incorporation of the waste into the mainstream waste disposal operations at ANL. The following acceptance criteria must be met for nonTRU waste to integrate it into the ANL disposal operations:

(1) NonTRU wastes must be segregated from TRU waste.

(2) Liquids must be immobilized.

(3) Corrosive liquid waste must be treated to obtain a pH in the range of 4 to 10.

(4) Radioactive wastes contaminated with hazardous wastes (referred to as mixed waste) are prohibited; lead and tetrachloroethylene are examples of hazardous materials.

(5) The waste package must have a maximum surface dose equivalent rate, at any point, no greater than 200 mRem/h (the limit for contact handled waste).

The acceptance criteria for TRU waste are similar to those listed above for nonTRU waste, except that lead shielding may be used for TRU waste.

1. Waste and Product Stream Treatment

A short explanation of the processing of each stream is included below. When possible, several streams from the PUREX process and the TRUEX process would be combined for disposal. For example, the plutonium and uranium streams from PUREX would be combined with the plutonium stream from TRUEX to make one waste stream for disposal.

a. Cladding Waste

Before being fed to the dissolver, the fuel rods would be cut into approximately 1-1/2-cm (0.6-in.) sections to allow dissolution of the fuel. Experience in the LWBR-POB program has shown that, in general, cladding is removed from the dissolver essentially free of fuel. Early LWBR-POB studies of dissolution of various fuel types have shown that the same result is expected for a wide variety of fuels. The cladding waste is, therefore, expected to be a nonTRU, low-level waste. For disposal, the fuel cladding would be mixed together with the nonTRU raffinate waste and disposed of as low-level waste. The easiest way to dispose of the cladding is in a cement waste form.

b. Plutonium and Uranium Product Streams

Processing ten typical fuel rods generates ~180 L dilute acid from PUREX and ~30 L from TRUEX. These acid solutions contain ~216 g plutonium from the PUREX process and ~0.2 g plutonium from the TRUEX process. The solution from the PUREX process also contains approximately 20 kg uranium. Evaporation in a pilot-plant vacuum rotary evaporator would reduce the total volume. The condensate could be recycled back to the uranium and plutonium strip sections, after the condensate composition is adjusted. An alternative to recycling the condensate is incorporating it into the ANL waste disposal operations.

To dispose of the concentrated acid fraction (which also contains the plutonium and uranium), the solution would be neutralized and then immobilized with an absorbant such as vermiculite. This is the waste handling procedure presently used by ANL for disposal of plutonium solutions. With this method, a solution containing 50 g plutonium absorbed on vermiculite would be packaged for disposal in 55-gal drums.

c. Americium/REFP Waste Stream

Processing ten fuel rods generates 60 L americium/rare earth fission product (or TRU waste) containing approximately 200 g solid and 0.5 g americium. The concentration of this solution would be adjusted so that incorporation of the solution into a solid matrix (e.g., cement) and 55-gal drums produces a contact-handled waste (<200 mRem/h).

d. TRUEX Raffinate

Processing ten typical fuel rods generates 132 L of nonTRU-containing raffinate. The high activity of this waste stream requires that shielding be used to obtain a

contact-handled waste package. Since regulations prohibit the mixing of nonTRU wastes and hazardous materials, lead (a hazardous material) is unacceptable as a shielding material. Alternative shielding materials were examined and are discussed in more detail below.

To produce a waste form for shipment, the solution should be evaporated, if possible, mixed with cement in 1.6-gal cans, then heated to dryness. Two 1.6-gal cans would then be loaded into shielded 55-gal drums.

e. Spent Solvent-Wash Solutions

Processing ten fuel rods would produce 20 L of a spent solvent-wash solution from both the PUREX and TRUEX processes. The solvent-wash solution for the TRUEX process would contain approximately 90 g uranium and would be incorporated with other nonTRU wastes at ANL.

2. Shielding Requirements

Disposal of two highly radioactive waste solutions produced in the TRUEX process requires the use of shielded containers. The volume of these waste solutions (the TRUEX raffinate and the americium/REFP waste) and an estimate of the number of shielded waste containers are given in Table 7 for each type of fuel. Since lead is a hazardous material, regulations prohibit its use as shielding for nonTRU waste containers. Depleted uranium and steel are two alternative shielding materials which have been considered. The residual volume of waste solution after evaporation, also given in Table 7, was used to estimate the number of containers required. To calculate the residual waste volume, the waste solutions would be evaporated to an activity of approximately 30 Ci/L, which is similar to that produced in the LWBR-POB Project. Dose rate measurements of the LWBR-POB waste solution were used to estimate activities for the Hot Demonstration Program waste solutions.

Based upon an equal distribution of waste containers over a three-year period, approximately 10 lead-shielded containers per year would be required for the americium/REFP waste solution; approximately 40 depleted-uranium-shielded containers per year would be required for shipping the nonTRU raffinate. The number of steel-shielded containers required for the nonTRU raffinate appears to be prohibitive from cost and manpower considerations, but a detailed analysis was not completed. A feasibility analysis of the depleted-uranium-shielded containers is required with respect to fabrication costs and safeguard requirements.

Table 8 gives estimates of the work breakdown for the waste disposal cement works. Based on 10 drying furnaces and two operators for the waste disposal operations, approximately 190 man-days and nine months are required to immobilize the TRUEX raffinate and the americium/REFP waste streams generated each year in 50 waste canisters.

Table 7. Calculated Volume of Waste Solutions Requiring Shielded Containers

Fuel Source	Number of Fuel Rods	Volume of Waste Solution, L		Evap. Vol. of Waste Solution,[a] L		Number of Waste Containers[b]	
		TRU	nonTRU	TRU	nonTRU	Lead Shielding	Depleted Uranium Shielding
Surry	12	72	158	6	32	1	5
Zion Phase I & II	13	78	172	16	34	3	6
Turkey Point	33	198	436	50	436[c]	9	73
Conn. Yankee	4	24	53	2	11	-	2
Monticello	12	72	158	14	32	3[d]	5
H. B. Robinson	12	72	158	14	32	3	6
OCONEE	14	84	185	17	37	3	6
Maine Yankee	3	18	40	2	8	-	-
Calvert Cliffs	1	6	13	2	13[c]	1[d]	4[d]
Quad Cities	5	30	66	6	13	1	2
Brunswick	5	30	66	6	13	1	2
Oyster Creek	14	84	185	17	37	3	6
				152	698	28	117

[a]Solutions evaporated to about 30 Ci/L.
[b]Number of containers required over a three-year period (expected processing of about 50 fuel rods the first year).
[c]No evaporation of this waste solution because of the expected activity of the waste.
[d]Includes waste solutions from processing Maine Yankee fuel rods.

Table 8. Work Breakdown for the Cement Works to Process Waste from 50 Typical Fuel Rods

Cement Operation	Effort, man-days	Processing Time,[a] days
Mixing	1	1
Curing	0	3
Drying	0	4
Topping/Mixing	0.5	0.5
Topping/Curing	0	3
Topping/Drying	0	8
Cask Loading[b]	2	1

[a]Based on cement processing in 1.6-gal can.
[b]Based on loading three casks; each cask contains two 1.6-gal cans.

REFERENCES

FAGAN

J. E. Fagan, P. G. Deeken, N. M. Levitz, and F. Kay, "Precision Measurement and Shearing of Fuel Rods for Destructive Analysis," presented at Am. Nucl. Soc. 29th Conf. on Remote Systems Technology, San Francisco, CA, November 29-December 4, 1981.

GRACZYK

D. G. Graczyk, J. C. Hoh, F. J. Martino, R. E. Nelson, J. Osudar, and N. M. Levitz, Final Report for the Light Water Breeder Reactor Proof-of-Breeding Analytical Support Project, Argonne National Laboratory Report, ANL-87-2 (1987).

HORWITZ-1982

E. P. Horwitz, D. G. Kalina, L. Kaplan, G. W. Mason, and H. Diamond, "Selected Alkyl(Phenyl)-N,N-Dialkylcarbamoylmethylphosphine Oxides as Extractants for Am(III) from Nitric Acid Media," Sep. Sci. Technol. 17, 1261 (1982).

HORWITZ-1983A

E. P. Horwitz, H. Diamond, and D. G. Kalina, "Carbamoylmethylphosphoryl Derivatives as Actinide Extractants," in Plutonium Chemistry, Chap. 27, ACS Symposium Series 216, eds., W. T. Carnall and G. R. Choppin, American Chemical Society, Washington, DC (1983).

HORWITZ-1983B

E. P. Horwitz, H. Diamond, D. G. Kalina, L. Kaplan, and G. W. Mason, "Octyl(Phenyl)-N,N-Diisobutylcarbamoylmethylphosphine Oxide as an Extractant for Actinides from Nitric Acid Waste," presented at the Int. Solvent Extraction Conf., Denver, CO, August 21-September 2, 1983.

HORWITZ-1985A

E. P. Horwitz, D. G. Kalina, H. Diamond, G. F. Vandegrift, and W. W. Schulz, "The TRUEX Process - A Process for the Extraction of the Transuranium Elements from Nitric Acid Wastes Utilizing Modified PUREX Solvent," Solv. Extr. Ion Exch. 3, 175 (1985).

HORWITZ-1985B

E. P. Horwitz, D. G. Kalina, H. Diamond, L. Kaplan, G. F. Vandegrift, R. A. Leonard, M. J. Steindler, and W. W. Schulz, "TRU Decontamination of High-Level PUREX Waste by Solvent Extraction Utilizing a Mixed Octyl(Phenyl)-N,N-Diisobutylcarbamoylmethylphosphine Oxide/TBP/NPH (TRUEX) Solvent," in Lanthanide/Actinide Separations, eds., G. R. Choppin et al., World Scientific Publications, Singapore (1985).

HORWITZ-1985C

E. P. Horwitz and W. W. Schulz, "Solvent Extraction and Recovery of the Transuranic Elements from Waste Solutions Using the TRUEX Process," Proc. of Int. Meeting on Solvent Extraction and Ion Exchange in the Nuclear Fuel Cycle, AERE Harwell, United Kingdom, September 3-6, 1985, Ellis Harwood Limited, Market Cross House, West Sussex, England (1985).

HORWITZ-1986

E. P. Horwitz and W. W. Schulz, "Application of the TRUEX Process to the Decontamination of Nuclear Waste Streams," presented at the Int. Solvent Extraction Conf., Munich, Federal Republic of Germany, September 11-16, 1986.

KALINA

D. G. Kalina and E. P. Horwitz, "Variations in the Solvent Extraction Behavior of Bifunctional Phosphorus-Based Compounds Modified with TBP," Solv. Extr. Ion Exch. 3, 235 (1985).

LEONARD-1985

R. A. Leonard, G. F. Vandegrift, D. G. Kalina, D. F. Fischer, R. W. Bane, L. Burris, E. P. Horwitz, R. Chiarizia, and H. Diamond, The Extraction and Recovery of Plutonium and Americium from Nitric Acid Waste Solutions by the TRUEX Process--Continuing Development Studies, Argonne National Laboratory Report, ANL-85-45 (1985).

LEONARD-1987

R. A. Leonard, E. C. Gay, D. R. Fredrickson, C. S. Sabau, D. J. Chaiko, L. Burris, E. P. Horwitz, R. Chiarizia, H. Diamond, R. C. Gatrone, G. A. Clark, and K. A. Martin, The TRUEX Process for Recovery of Plutonium and Americium from Nitric Acid Waste Solutions--Continuing Development Studies, FY 1986, Argonne National Laboratory Report, ANL-87-3.

LEVITZ

N. M. Levitz, J. E. Parks, I. O. Winsch, R. J. Meyer, D. G. Graczyk, G. Tomlinson, and P. G. Deeken, Report on the Shearing, Dissolution, and Analysis of GRIP-II Rod 79-453 (Validation Rod), Argonne National Laboratory Report, ANL-80-88 (1981).

PARKS

J. E. Parks, I. O. Winsch, C. E. Stevenson, and N. M. Levitz, "Analytical Shearing of Fuel Rods in a Hot Cell," Trans. Am. Nucl. Soc. 30, 753 (1978).

PASUPATHI

V. Pasupathi, private communication, Battelle-Columbus Laboratory (1986).

VANDEGRIFT

G. F. Vandegrift, R. A. Leonard, M. J. Steindler, E. P. Horwitz, L. J. Basile, H. Diamond, D. G. Kalina, and L. Kaplan, Transuranic Decontamination of Nitric Acid Solutions by the TRUEX Solvent Extraction Process--Preliminary Development Studies, Argonne National Laboratory Report, ANL-84-45 (1984).

WALSER

R. Walser, private communication, Westinghouse Hanford Company (1986).

APPENDIX A

Shielded-Cell Facility Description

The cave complex (or shielded-cell facility) consists of two floors of shielded cells with a once-through air ventilation system. Exhaust blowers and filters are on the third level of the facility. All walls on the lower floor are 4-ft thick with a 40-in.-thick ceiling. Magnetite-ore-filled concrete in the walls of three of the cells provides shielding against one million curies of 1 MeV gamma or against a point source emitting 10^{12} fission neutrons per second. The fourth cell on this floor is a special facility that was to be used for the remote packaging of radioactive waste and shields against 50,000 Ci of 1 MeV gamma radiation.

Wall thicknesses on the second floor are uniformly 28 in. with 2-ft-thick ceilings. Magnetite concrete in the walls of three of the cells provides shielding against 1000 Ci of gamma radiation or a point source of 10^9 neutrons per second. Other walls are of normal concrete, so the remaining five cells on this floor will shield against 30 Ci of gamma radiation. Tanks of 71% zinc bromide solution (40 in all) are used as viewing windows throughout the structure. Thirty-eight of the window positions are equipped with penetrations for installation of master-slave manipulators. Two mobile and two bridge-mounted remotely controlled polar manipulators are also available for use in areas not accessible to the master-slave manipulators. Fig. A-1 shows the floor plan of M-Wing, in the ANL Chemistry Division, which houses the shielded-cell facility. A more detailed plan view of the cave complex is shown in Fig. A-2.

Heavy shipping casks are received at the loading dock and then moved on a 20-ton lowboy to the front portion of the cave complex (on the service floor, lower level). Here, the shipping containers can be remotely unloaded, and the contents placed onto battery-driven, radio-controlled "mules" or small trucks running on a narrow gauge railway system that extends throughout the structure. Turntables are located at suitable locations to permit the mules to change their direction of travel. An elevator at one end of the facility allows movement of the mules between floors.

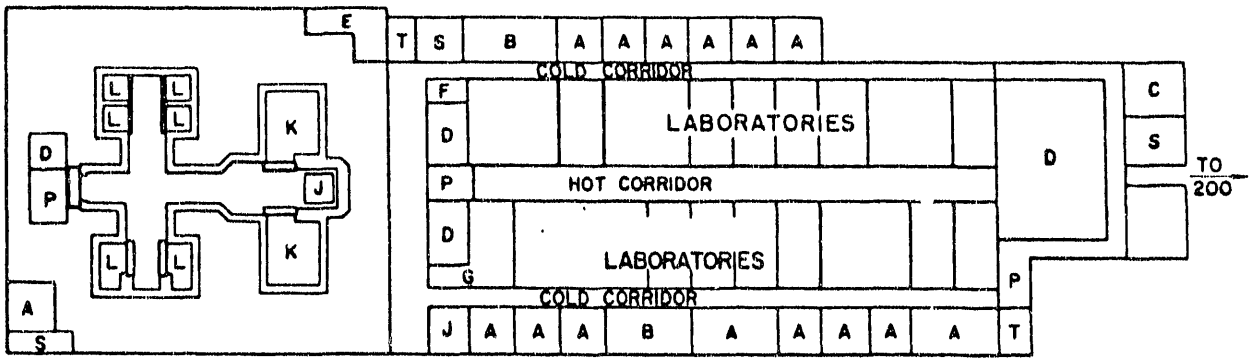

MAIN FLOOR

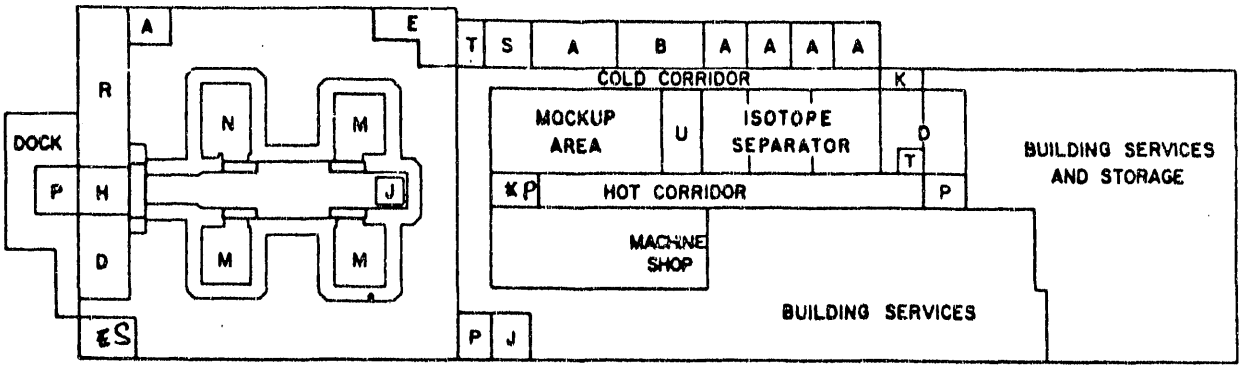

Long Side = 320 feet
Width in Cave Section = 95 feet

SERVICE FLOOR

KEY:

A - Offices
B - Counting Rooms
C - Conference Room
D - Change Rooms
E - Radiation Safety
F - Stockroom
G - Decontamination (e)
H - Radiation Lock
J - Elevator
K - Kilocurie Cells
L - Analytical Cells
M - Megacurie Cells
N - Decontamination Cell
P - Air Lock
R - Reclamation Area
S - Stairs
T - Janitor Closet
U - Laboratory

Fig. A-1. Floor Plan of Shielded-Cell Facility

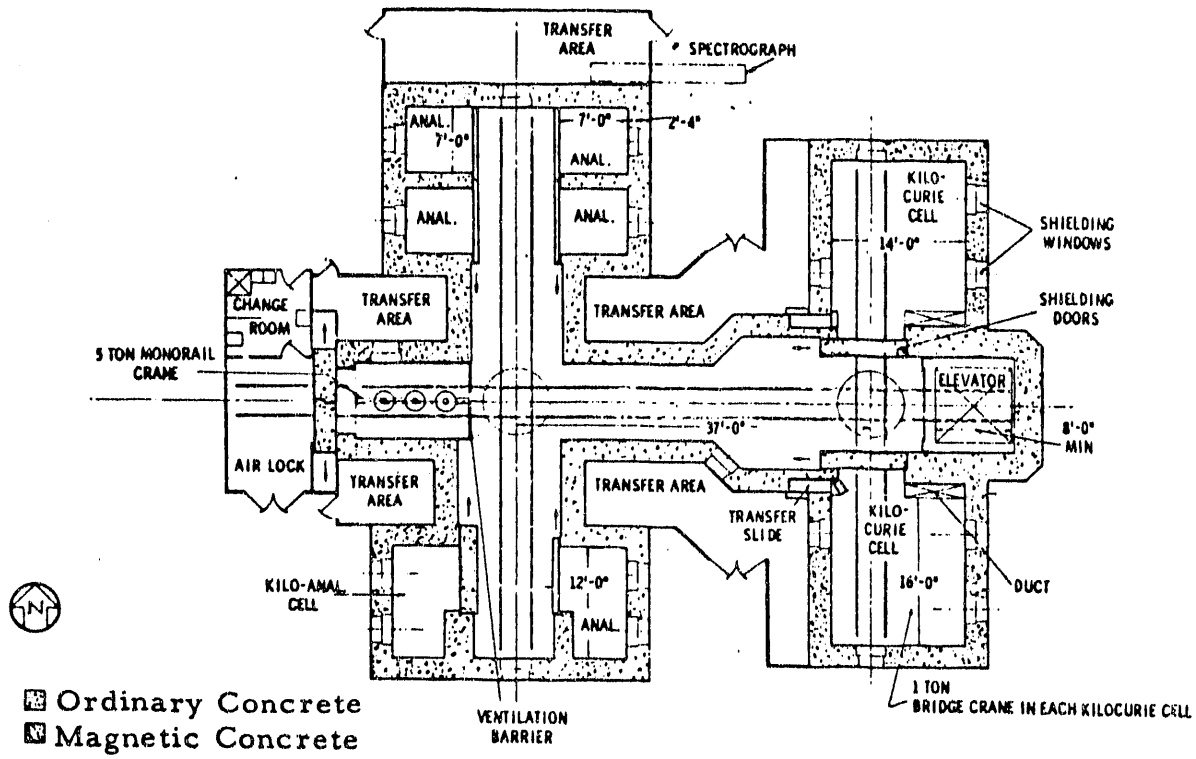

Main Floor

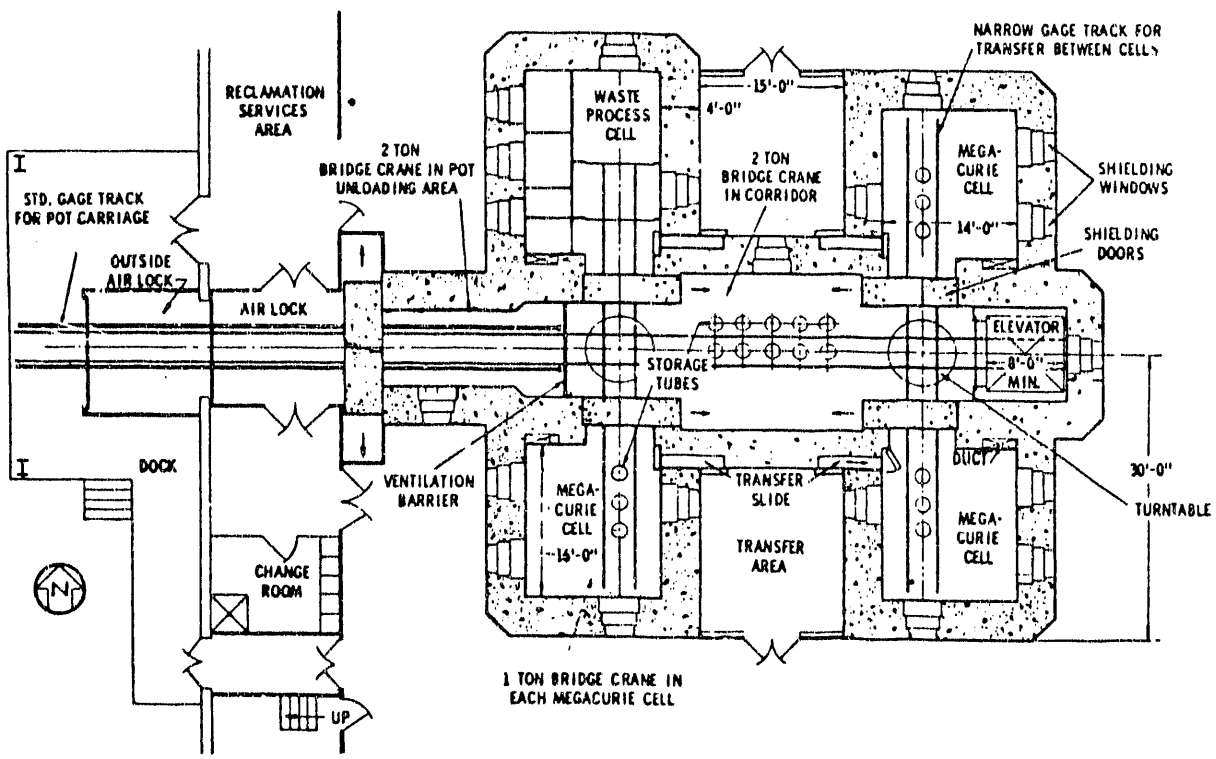

Service Floor

Fig. A-2. Floor Plan of Cave Complex in Shielded-Cell Facility

APPENDIX B

Dissolution Bases for the Hot Demonstration Program

Dissolver Conditions

To maintain compatibility of dissolved fuel solutions with the existing dissolvers and contactors and TRUEX and PUREX solvents, dissolution with nitric acid is the procedure of choice. The use of sulfuric, hydrochloric, or concentrated hydrofluoric acids must be avoided because of corrosion problems and extreme differences in the solvent extraction chemistry. Fortunately, a great many fuels of interest are readily dissolved in concentrated nitric acid.

In particular, fuels fabricated from uranium, thorium, and plutonium metals or oxides--alone or in mixtures--are amenable to nitric acid dissolution. For some of these fuels--particularly those containing PuO_2--the addition of low concentrations (~0.05M) of fluoride is necessary to effect complete dissolution. The corrosive effects of the added fluoride can be effectively countered by the addition of excess aluminum ion to complex the fluoride. This dissolution procedure, which is the basis of dissolution in the THOREX [HUTTON, CULLER] process, adds only relatively small quantities of material to the dissolver solution and has little effect on the solvent extraction chemistry as compared to dissolution in nitric acid alone.

We have examined dissolution of fuels composed of alloys of uranium with aluminum, molybdenum, silicon, zirconium, and niobium. Aluminum-based alloys and cermets readily dissolve in nitric acid in the presence of a mercury catalyst [5×10^{-4} M $Hg(NO_3)_2$], which is apparently necessary to prevent passivation of the fuels. The uranium is dissolved from U-Si alloys, leaving a silicon residue.

Uranium alloys with Mo, Zr, and Nb present more of a challenge for dissolution. Oxides of molybdenum have only limited solubility in HNO_3, resulting in precipitation of molybdic acid, which must be removed by filtration. Alternatively, molybdenum can be solubilized by the addition of high concentrations of iron (up to 1M), which increases the amount of solid waste in the processing of the dissolved fuel, or by the addition of phosphoric acid, which significantly reduces distribution ratios of the actinides in the PUREX process. Both niobium and zirconium alloys with uranium require the addition of fluoride for dissolution. In addition, the presence of zirconium represents an explosion hazard [LARSEN]. Although Zr-U alloys with low zirconium content may be dissolved under conditions fairly similar to those used for THOREX processing, alloys with high Zr content require much higher HF concentrations (up to 9M) for dissolution.

Other fuels include thorium and uranium carbide, thorium oxide dispersed in BeO, and uranium oxide-stainless steel cermet. Of these, only the ThO_2-BeO fuel appears compatible with nitric acid dissolution without further treatment.

Carbide fuels have been dissolved in nitric acid as well. However, the dissolution produces substantial quantities of organic material, which affect solvent extraction behavior.

Digestion of the dissolver solution with additional HNO_3 followed by oxidation of the organic material with permanganate has been employed to circumvent this problem. For carbide fuels coated with pyrolytic carbon, crushing and burning of the fuel are necessary before dissolution is effected.

Stainless steel cermets have been dissolved using H_2SO_4/HNO_3 mixtures. The high concentrations of sulfate introduced in this procedure make this process undesirable. Since stainless steel is passivated by HNO_3, it may be possible to selectively dissolve UO_2 from the cermet without dissolving the stainless steel. Apparently, this procedure has not been tested.

Based on the known dissolution behavior of fuels and information regarding the composition and physical characteristics of fuels stored at the Idaho Chemical Processing Plant (ICPP), Idaho National Engineering Laboratory (INEL), two general classes of fuels have been defined. The first class, containing fuels that should be compatible with the existing dissolver and proposed chemical processing, is compiled in Table B-1. Table B-2 lists fuels for which insufficient information is available or for which dissolution may require additional steps. The fuels in these two tables are also categorized based on compatibility with existing handling and shearing facilities.

Table B-3 is a compilation of selected data on conditions and rates of fuel dissolution. Additional information of this nature is also available in the Gmelin Handbook of Inorganic Chemistry ("Uranium," A4, and "Transurane," A1, and references therein).

Dissolver Solutions

The composition of the solutions resulting from dissolution of fuels will, of course, be a function of the quantity and type of fuel and the volume and concentration of acid used in the process. Fortunately, the composition of the solution can be approximated based on the amounts of the major constituents of the fuel and the approximate stoichiometries of the reactions of these constituents with nitric acid. Thus, by choosing appropriate volumes and concentrations of dissolver solution, one obtains the final solution from the dissolver that has the appropriate concentrations of acid and metal ions for use as feed to the PUREX process.

Dissolution of metals by HNO_3 results in the formation of nitrogen oxides as a consequence of the oxidation of the metal to its ionic form in solution. This means that more than the stoichiometric quantity of HNO_3 is used in the dissolution process. Studies have shown that the dissolution of uranium, thorium, and aluminum in metal or alloy fuels proceeds by the following approximate reactions:

$$U + 4.5\ HNO_3 \longrightarrow UO_2(NO_3)_2 + 2.25\ H_2O + 1.57\ NO + 0.84\ NO_2 + 0.005\ N_2O + 0.043\ N_2$$

$$Th + 6\ HNO_3 \longrightarrow Th(NO_3)_4 + 3\ H_3O + NO + NO_2$$

$$Al + 3.75\ HNO_3 \longrightarrow Al(NO_3)_3 + 1.875\ H_2O + 0.225\ NO + 0.15\ N_2O + 0.1125\ N_2$$

Table B-1. Spent Fuels Stored at ICPP/INEL Compatible with Dissolution in HNO_3

Classification[a]	Designation	U, kg	% ^{235}U	Fuel Type	Cladding
Amenable to processing with little or no modification of ANL equipment	Pulstar (Buffalo)	251	4.8	UO_2 Pellet	Zircaloy
	VBWR (Geneva)	3.4	22.1	UO_2	SS
	Halden Assay 431 Rods	2.3	9.6	UO_2 Pellet	Zirc
	MAPI Rods	20.2	5.6	UO_2 Pellet	Zirc-4
	GAP CON	12.8	10	UO_2 Pellet	Zirc-2
	SFD-ST	12.3	6.2	UO_2 Sintered Pellet	Zirc-4
	SFD 1-1	13.8	6.2	UO_2 Sintered Pellet	Zirc-4
	SFD 1-18	13.4	6.2	UO_2 Sintered Pellet	Zirc-4
	SFD 1-3	12.2	2.3	UO_2 Sintered Pellet	Zirc-4
	SFD 1-4	12.3	2.5	UO_2 Sintered Pellet	Zirc-4
	LLR TEST	3.5	9.3	UO_2 Sintered Pellet	Zirc-4
	IE-ST	2.0	9.0	UO_2 Sintered Pellet	Zirc-4
	TC TEST	5.8	9.7	UO_2 Pellet	Zirc-4
	RIA TEST	18.6	5.4	UO_2 Pellet	Zirc-4
	TORY IIA	48.6	93	UO_2-BeO Cermet	
	GE SA-1 Rods	18.6	2.1		
	GE Rods BWR/6	14.0	2.0	UO_2 Sintered Pellet	Zirc-2
	Saxton Rods	5.8	8.4	UO_2 Pellets	Zirc-4
Requiring major change in ANL equipment	HB Robinson	293	0.7	UO_2 Sintered Pellet	Zirc-4
Insufficient data to determine processing groups	NRC-F.S.P.	552	2.9		
	F.B.V.P.	200	1.0		
	Spec	2.4	5.1	U-3.5% Mo	SS

cont'd

Table B-1 (cont'd)

Classification[a]	Designation	U, kg	% ^{235}U	Fuel Type	Cladding
Insufficient data to determine processing groups (cont'd)	PCM Test	12.0	19.5	UO_2 Sintered Pellet	Zirc-4
	PCM Test	4.2			
	IE Test	6.0	10.8	UO_2 Sintered Pellet	Zirc-4
	LOC Test			UO_2 Sintered Pellet	Zirc-4
	GCRE	0.908	93	UO_2-BeO	Hastelloy X
	BMI	1.8	66	UO_2	SS or Hastelloy

[a]Classification based upon physical limitations of shear.

Table B-2. Spent Fuels Stored at ICPP/INEL Possibly Requiring Special Treatment for Dissolution

Classification[a]	Designation	U, kg	$\%^{235}$	Fuel Type	Cladding	Comments
Amenable to processing with little or no modification of ANL equipment	VBWR	8.98	20.6	UO_2-TiO_2	SS	Uncertain of TiO_2 dissolution.
	Al	7.85	92.2	ZrH-U		May require HF dissolution-explosion hazard?
	Rover	1350	93	UO_2-PyC[b]-coated		Requires degradation of PyC before dissolution.
	Pathfinder			UO_2 in SS	316L SS	Uncertain of effect of SS on UO_2 dissolution--H_2SO_4 normally used.
Requiring some modification of ANL equipment	SNAP (STF)	2.88	93	U in Alloy with ZrH	606A	May require HF dissolution-explosion hazard?
	SNAP (SER)	1.77	93	U in Alloy with ZrH		May require HF dissolution-explosion hazard?
	SNAP	12.7	93	U in Alloy with ZrH		May require HF dissolution-explosion hazard?
	SNAP-2 (S2DR)	3.60	93	U in Alloy with ZrH	Hastelloy	May require HF dissolution-explosion hazard?
	Peach Bottom	332	67.2	U-Th Carbide	Graphite	Destruction of organic materials from HNO_3 dissolution of carbide necessary--crushing of fuel perhaps necessary.
Requiring major change in ANL equipment	TRIGA	131	21.4	U, ZrH	SS or Al	May require HF dissolution-explosion hazard?
	SPERT	0.59	92.9	UO_2 in SS	304L SS	Uncertain of effect of SS on UO_2 dissolution--H_2SO_4 normally used.
	BORAX V	20.8	93.2	UO_2 cermet	SS	May require H_2SO_4 dissolution.
	APPR	0.22	92.6	UO_2 in SS	304 SS	Uncertain of effect of SS on UO_2 dissolution--H_2SO_4 normally used.

(cont'd)

Table B-2. (cont'd)

Classification[a]	Designation	U, kg	$\%^{235}$	Fuel Type	Cladding	Comments
Insufficient data to determine processing groups	WAPD-49	6.58	17.7	UO_2	SS or Zr, SS, NaK	Must destroy NaK.
	Fermi I Blanket	34200	0.35	U-Mo Alloy, Na	SS	Mo precipitation may be problem, must destroy Na.
	[illegible]R-2	490		$UO_2 + ZrO_2$	Zirc-4	ZrO_2 may be problem .
	LWBR	539		Ceramic Pellets	Zr	Composition?
	TORY IIC	59.1	93	UO_2, Y_2O_3, ZrO_2	Al	ZrO_2 may be problem.

[a]Classification based on physical limitations of shear.
[b]Pyrolytic carbon.

Table B-3. Selected Data for Fuel Dissolution

Fuel	Dissolution	Comments	Reference
U	40% HNO_3 + 60% HNO_3	Data for several runs	BRADFORD
U Metal	6M HNO_3 + O_2	300 g/L U in ~3M HNO_3	HOWELLS
U Metal	11M HNO_3 (boiling)	~.5 kg/h dissolution in 10 kg batch, 400-500 g U/L, 2-3M HNO_3	GAUDERNACK
U (Metal?)	13M HNO_3	NaOH for Al decladding	SETHNA
U Metal	11M HNO_3	10-12 h for 100 kg, 26 mm diameter rods	REGNAUT
UO_2 (Declad)	4M HNO_3	5-6 h dissolution	CULLER
UO_2	4.5M HNO_3	0.002 mol/L/min	BEONE
UO_2	2-16M HNO_3	Rates for 90°C and boiling	CLARK
PuO_2-UO_2	8-12M HNO_3 + 0.05M HF	Declad with molten Zn	FERGUSON
PuO_2-UO_2	6-12M HNO_3	<1.5 h to dissolve 6 mm diameter elements	FAUGERAS
20% PuO_2-80% UO_2	8M HNO_3	~80% Pu, 98% U dissolution in 10-12 h	GOODE
Pu Alloys	16M HNO_3 +0.05M HF		WINCHESTER
93.8% Pu-U (alloy?)	13M HNO_3 +0.05M HF 125°C	480 g in 12 h	BRUCE
Pu-Al Alloy	6M HNO_3-0.05M $Hg(NO_3)_2$-0.02M HF	0.5 mg/min/cm^2 for 99% burnup vs. 20 mg/min/cm^2 for 60% burnup	PERKINS
Al-U Alloy	HNO_3 + Hg^{2+}	Slower rates for some alloys, higher Hg^{2+} for irradiated fuel	FLETCHER
80% Al-U Alloy	12M HNO_3 + $Hg(NO_3)_2$ + steam	5 kg (250 g U) in 6-h steam to avoid H_2 explosion	BUCK
96% Al-U Alloy	7M HNO_3 + 0.05M Hg^{2+}	Yields ~0.01M U, 1.95M Al	CALLERI
U-Mo	11M HNO_3 + O_2	Max 300 g U/L for .5% Mo or 150 g U/L for 1.1% Mo in 3M HNO_3	PLESSY

(cont'd)

Table B-3. (cont'd)

Fuel	Dissolution	Comments	Reference
U-Mo Alloy	HNO_3 + 6 g/L $Fe(NO_3)_3$	Also use H_3PO_4 for Mo	SHEVCHENKO
97% U-3% Mo Alloy	12-14M HNO_3	MoO_3 ppt, 11 g/cm^2/h for 5 to 15M HNO_3	SCHULZ-A
Mo-U Alloys	HNO_3	Dissolution rates as function of HNO_3, Fe	FERRIS-A
Zr Jacketed 10% Mo/U Alloy	2.5M HNO_3 + 0.06M HF		CULLER
12% Mo/U Alloy	11M HNO_3	Centrifuge to remove molybdic acid	CULLER
3% and 9% Mo-U Alloys	HNO_3	Maximum U concentrations as function of HNO_3-Mo alloys 5-20 times faster than U metal	SCHULZ-B
3% Mo-97% U Alloy	HNO_3	Stable solutions of 1.1M U in 1.1M HNO_3 with 0.2M H_3PO_4 or 0.75M Fe(III)	COOPER
U/Zr (Alloy?)	HF + HNO_3	$Cr_2O_7^{2-}$ added afterwards for U oxidation, Al added for NO_3^- + F^- tie-up	REID
2% Zr/U Alloy	11M HNO_3, 0.33M $Al(NO_3)_3$, 0.3M HF, 0.001M $Hg(NO_3)_2$	Yields 4.5M HNO_3, 0.75M Al	CULLER
U-C	2-6M HCl, 80°C	Faster for irradiated fuel	BRADLEY
Th/U Carbide-Carbon Coated	13M HNO_3 + 0.05M HF	Grind-leach	NICHOLSON
U/Th Carbide, PyC + SiC	Thorex dissolver solution	Fuel crushed and burned before dissolution	HUTTON
UC	HNO_3	Analysis of carbon-containing products	FERRIS-B
U/.5% Si Alloy	8M HNO_3	Silica residue retains shape	CULLER
ThO_2/UO_2	HNO_3 + HF	Studies of HNO_3, F^-, Al, and Zr effects on dissolution	DYCK

(cont'd)

Table B-3 (cont'd)

Fuel	Dissolution	Comments	Reference
ThO_2/UO_2	Thorex dissolver solution	ca. 8 times slower than UO_2	NICHOLSON
90% ThO_2/3.6% UO_2/CaF_2	13M HNO_3 + 0.04M HF	Yields 1M Th, 8.6M HNO_3, 0.04M U, 8-12 h	CULLER
UO_2/ThO_2 Dispersed in BeO	8M HNO + 0.5M HF	Leach or grind leach	NICHOLSON
Th Metal	13M HNO_3 + 0.04M NaF		BRUCE
Th	13M HNO_3 + 0.05M HF	Rate data, effect of Al	GOODALL

The amount of HNO_3 consumed in the dissolution process can be calculated based on these approximate stoichiometries so that the final acidity and metal concentration can be predicted. In some processes, the nitrogen oxides generated are converted back to HNO_3 by oxygen addition (fumeless dissolving) so that the amount of HNO_3 consumed is reduced to the stoichiometric amount (2, 3, and 4 mol of HNO_3 per mole of metal for U, Al, and Th, respectively).

The dissolution of oxide fuels can similarly be controlled by choosing the correct quantities of acid and fuel to generate a solution of the appropriate concentration. For oxide fuels, the following reactions approximate the process:

$$UO_2 + 3\ HNO_3 \rightarrow UO_2(NO_3)_2 + 1.5\ H_2O + 0.5\ NO + 0.5\ NO_2$$

$$ThO_2 + 4\ HNO_3 \rightarrow Th(NO_3)_4 + 2\ H_2O$$

As with metal fuels, oxygen addition can reduce the amount of HNO_3 consumed in dissolving UO_2 to 2 mol acid per mole of metal.

Since the kinetics of dissolution are strongly dependent on the acid concentration in the dissolver, in many cases it is desirable to prepare a solution more concentrated in acid (and, perhaps, metal) than is to be used in the feed. Then, either by dilution with dilute acid (to avoid Pu hydrolysis or local precipitation), neutralization with base, or denitration with sugar or formic acid, the feed solution of appropriate acidity and metal concentration can be prepared. Of course, this process requires that the composition of the initial dissolver solution be well known.

The acid concentration and the concentrations of the major constituents in the feed can be calculated as shown above. Concentrations of other components in the solution can be determined knowing the initial composition, burn-up, and cooling time of the fuel. With these data in hand, feed preparation can be accomplished in a relatively simple fashion.

REFERENCES FOR APPENDIX B

BEONE

G. Beone, "The Mercury-Catalyzed Sulfuric Acid Dissolution of Aluminum and S.A.P.," Energia Nucl. (Milan) 12, 273 (1965).

BRADFORD

J. L. Bradford and K. L. Adler, Pilot-Plant Studies of the Mercury-Catalyzed Dissolving of Aluminum-Jacketed Fuel Elements, Hanford Atomic Products Operation Report, HW-32316 (1954).

BRADLEY

M. J. Bradley, J. H. Goode, L. M. Ferris, J. R. Flanary, and J. W. Ullmann, "Reactions of Reactor-Irradiated Uranium Monocarbine with Water and with Aqueous Solutions of NaOH, HCl, and H_2SO_4," Nucl. Sci. Eng. 21, 159 (1965).

BRUCE

F. R. Bruce, E. M. Shank, R. E. Brooksbank, J. R. Parrott, and G. S. Sadowski, "Operating Experience with Two Radiochemical Processing Pilot Plants," Proc. of 2nd U.N. Int. Conf. on the Peaceful Uses of Atomic Energy, Vol. 17, p. 49 (1958).

BUCK

C. Buck, G. R. Howells, T. A. Parry, B. F. Warner, and J. A. Williams, "Chemical Processes at U.K. Atomic Energy Authority Works, Dounreay," ibid, Vol. 17, p. 25 (1958).

CAIRNS

R. C. Cairns, "Reprocessing of BeO Based Fuels," J. Nucl. Mater. 14, 55 (1964).

CALLERI

G. Calleri, S. Cao, M. Fiorelli, C. Orsenigo, U. Piatti, and C. Vallone, "Italian Progress Report on Reprocessing of Irradiated Fuels," Proc. of 4th U.N. Int. Conf. on the Peaceful Uses of Atomic Energy, Vol. 8, p. 375 (1972).

CLARK

A. T. Clark, L. H. Meyer, J. H. Owen, and F. G. Rust, Electrolytic Dissolution of Power Reactor Fuels in Nitric Acid, E. I. duPont de Nemours & Company Report, DP-647 (1961).

COOPER

V. R. Cooper, Quarterly Report - Technology of Non-Production Reactor Fuels Processing, Hanford Atomic Products Operations Report, HW-63406 (1960).

CULLER

F. L. Culler and R. E. Blanco, "Dissolution and Feed Preparation for Aqueous Radiochemical Separation Processes", Proc. of 2nd U.N. Int. Conf. on the Peaceful Uses of Atomic Energy, Vol. 17, p. 259 (1958).

DYCK

R. W. Dyck, R. Taylor, and D. G. Boase, Dissolution of $[Th,U]O_2$ in Nitric Acid-Hydrofluoric Acid Solutions, Atomic Energy of Canada Report, AECL-5957 (1977).

FAUGERAS

P. Faugeras, M. Bourgeois, X. Talmont, F. Bendell, L. Thiriet, B. Cochet-Muchy, and M. Perrot, "Traitement des Combustibles Hautement Irradies; Techniques et Perspectives d'avenir," Proc. of 4th U.N. Int. Conf. on the Peaceful Uses of Atomic Energy, Vol. 8, p. 429 (1972).

FERGUSON

D. E. Ferguson, C. R. Cooley, E. B. Sheldon, and D. S. Webster, "Recovery of Liquid-Metal Fast-Breeder Reactor (LMFBR) Fuels: Development of Techniques," ibid, Vol. 8, p. 395 (1972).

FERRIS-A

L. M. Ferris, Aqueous Process for Dissolution of Uranium-Molybdenum Alloy Reactor Fuel Elements, Oak Ridge National Laboratory Report, ORNL-3068 (1961).

FERRIS-B

L. M. Ferris and M. J. Bradley, "Reactions of the Uranium Carbides with Nitric Acid," J. Am. Chem. Soc. 87, 710 (1965).

FLETCHER

R. D. Fletcher, M. E. Jacobson, and H. R. Beard, Effect of Alloying Constituents on Aluminum Dissolution Rates, Idaho Operations Office Report, IDO-14606 (1963).

GAUDERNACK

B. Gaudernack, K. P. Lindland, and C. J. Joseph, "Operational Experience from the Kjeller Reprocessing Plant," Proc. of 3rd U.N. Int. Conf. on the Peaceful Uses of Atomic Energy, Vol. 10, p. 253 (1965).

GOODALL

C. A. Goodall, J. L. Hepworth, R. L. Moore, and R. A. Watts, A Kinetic Study of the Fluoride Catalyzed Nitric Acid Dissolution of Thorium Metal, Hanford Atomic Products Operation Report, HW-40250 (1955).

GOODE

J. H. Goode, Voloxidation - Removal of Volatile Fission Products from Spent LMFBR Fuels, Oak Ridge National Laboratory Report, ORNL-TM-3723 (1973).

HOWELLS

G. R. Howells, T. G. Hughes, D. R. Mackey, and K. Saddington, "The Chemical Processing of Irradiated Fuels from Thermal Reactors," Proc. of 2nd U.N. Int. Conf. on Peaceful Uses of Atomic Energy, Vol. 17, p. 3 (1958).

HUTTON

A. E. Hutton, Dissolution of HTGR Fuel, General Atomics Report, GA-A13278 (1975).

LARSEN

R. P. Larsen, R. S. Shor, H. M. Feder, and D. S. Klikkema, A Study of the Explosive Properties of Uranium-Zirconium Alloys, Argonne National Laboratory Report, ANL-5135 (July 1954).

NICHOLSON

E. L. Nicholson, L. M. Ferris, J. R. Flanary, J. H. Goode, B. A. Hannaford, J. W. Landry, J. G. Moore, R. H. Rainey, C. D. Watson, and H. O. Witte, "Recent Developments in Thorium Fuel Processing," Proc. of 2nd Int. Thorium Fuel Cycle Symp., p. 589 (1968).

PERKINS

W. C. Perkins, Dissolving Highly Irradiated Pu-Al Alloy, E. I. duPont de Nemours & Company Report, DP-874 (1964).

PLESSY

L. Plessy and J. Travert, "Traitment Industriel des Combustibles Uranium-Molybdene Irradies," Bull. Inform. Sci. Tech (Paris) 123, 59 (1968).

REGNAUT

P. Regnaut, P. Faugeras, A. Brut, R. Helou, and A. Redon, "The Processing of Irradiated Uranium in the Fontenay-AUX-Roses Pilot Plant," Proc. of 2nd U.N. Int. Conf. on Peaceful Uses of Atomic Energy, Vol. 17, p. 73 (1958).

REID

D. G. Reid, C. E. Stevenson, R. B. Lemon, and F. K. Wrigley, "Reprocessing of Fuel Containing Zirconium," ibid, Vol. 17, p. 145 (1950).

SCHULTZ-A

W. W. Schultz, Reprocessing Uranium-Molybdenum Alloy Fuels - Dissolution in Concentrated Nitric Acid, Hanford Atomic Products Operations Report HW-64432 (1960).

SCHULTZ-B

W. W. Schultz and E. M. Duke, Reprocessing of Low-Enrichment Uranium-Molybdenum Alloy Fuels, Hanford Atomic Products Operations Report, HW-62086 (1959).

SETHNA

H. N. Sethna and N. Srinivasan, "Fuel Reprocessing Plant at Trombay," Proc. of 3rd U.N. Int. Conf. on the Peaceful Uses of Atomic Energy, Vol. 10, p. 272 (1965).

SHEVCHENKO

V. B. Shevchenko, N. S. Povitsky, and A. S. Solovkin, "Problems in the Treatment of Irradiated Fuel Elements at the First USSR Atomic Power Plant," Proc. of 2nd U.N. Int. Conf. on the Peaceful Uses of Atomic Energy, Vol. 17, p. 46 (1958).

WINCHESTER

R. S. Winchester and W. J. Maraman, "Aqueous Recovery of Plutonium from Alloys Containing Fission Products Elements," ibid, Vol. 17, p. 168 (1958).

APPENDIX C

The Modified-PUREX/TRUEX Process

The modified-PUREX/TRUEX process is designed to recover purified neptunium, uranium, and plutonium products from dissolved nuclear fuel and to produce a nonTRU raffinate and a concentrated TRU waste stream containing americium, curium, and rare earth fission products. This process is illustrated in Fig. C-1. The background literature and experimental data that were used to design this flowsheet are described below.

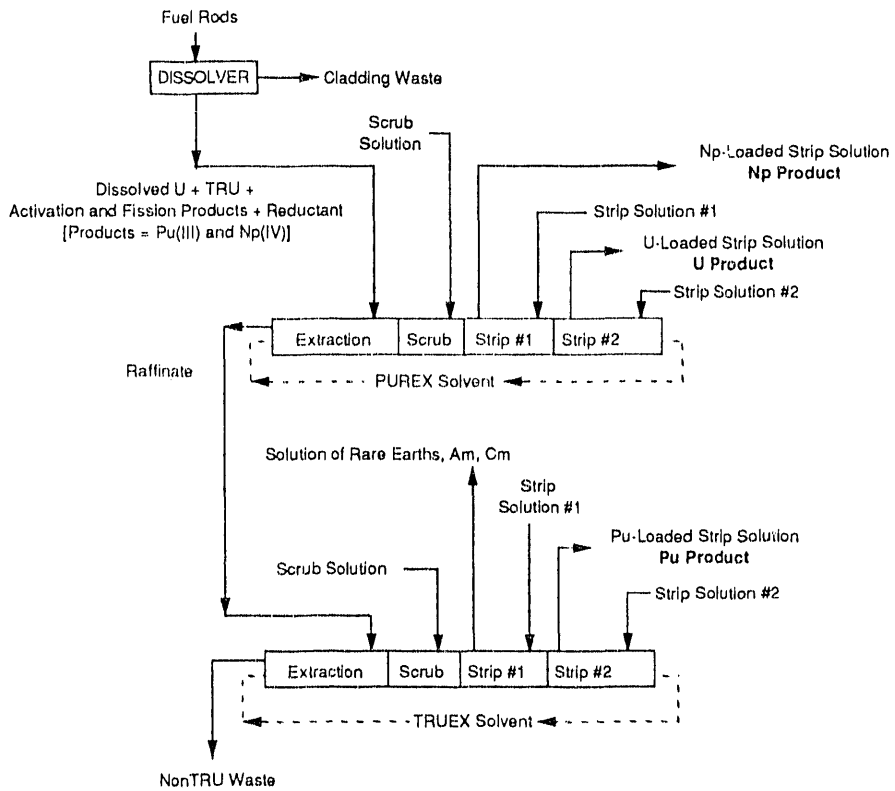

Fig. C-1. Modified-PUREX/TRUEX Process for U and TRU Element Recovery from Nuclear Fuel Rods

1. Maintenance of Pu Oxidation State in the Modified-PUREX/TRUEX Process

The modified-PUREX/TRUEX process is based on the combination of uranium and neptunium extraction by tributyl phosphate (TBP), much as in the PUREX process, followed by extraction and subsequent separation of plutonium and americium (along with rare earth fission products) using octyl(phenyl)-N,N-diisobutylcarbamoylmethylphosphine oxide (OϕD[ib]CMPO, generally called CMPO) in a TRUEX process. Essential to the success of this combined separation scheme is the maintenance of plutonium in the poorly extracted, trivalent state to

ensure a good uranium-plutonium separation during the uranium extraction by the PUREX solvent. Use of the reductant for converting plutonium to Pu(III) will also maintain neptunium as the PUREX-extractable Np(IV) species. Before or during the TRUEX portion of this process, the plutonium is oxidized to its tetravalent state so that a plutonium-americium separation can be accomplished by differential stripping. (If only a single TRU/rare-earth-fission-product stream is desired, Pu can be left in the III oxidation state.) In fixing the oxidation state of plutonium, it is also desirable to adjust the oxidation state of the neptunium present in solution so that it too could be extracted and separated in a quantitative fashion.

a. Reducing Agents for Plutonium

Several reductants have been employed for converting plutonium to the trivalent state in fuel reprocessing schemes [GMELIN]. The best studied of these reductants are ferrous ion (Fe^{2+}), tetravalent uranium (U^{4+}), and hydroxylammonium nitrate ($NH_2OH \bullet HNO_3$ or HAN). Of these, ferrous ion [as ferrous sulfamate, $Fe(SO_3NH_2)_2$] has been the most widely used in fuel reprocessing in the PUREX process. Of course, each of these reducing agents has its advantages and drawbacks.

Once Pu(III) is formed in solution, stabilizers or excess reductant must be present to avoid reoxidation to Pu(IV). In particular, oxidation of Pu(III) by nitrate will occur slowly [CLEVELAND]:

$$3Pu^{3+} + 4H^+ + NO_3^- \rightarrow 3Pu^{4+} + NO + 2H_2O \quad (1)$$

Although oxidation by nitrate is slow, it does produce NO as a product. This NO can react to form NO_2^-, which is a powerful oxidant for Pu(III), generating additional NO in an autocatalytic reaction:

$$2NO + HNO_3 + H_2O \rightarrow 3HNO_2 \quad (2)$$

$$Pu^{3+} + NO_2^- + 2H^+ \rightarrow Pu^{4+} + NO + H_2O \quad (3)$$

It is necessary, therefore, to add a stabilizer to react with any nitrite present in solution to avoid this reoxidation. The most effective stabilizers that have been used are sulfamate:

$$HNO_2 + SO_3NH_2^- \rightarrow N_2 + H_2O + SO^{2-} + H^+ \quad (4)$$

and hydrazine:

$$N_2H_5^- + HNO_2 \rightarrow HN_3 + 2H_2O + H^+ \quad (5)$$

$$HN_3 + HNO_2 \rightarrow N_2O + N_2 + H_2O \quad (6)$$

Ferrous sulfamate combines the rapid kinetics of Pu(IV) reduction by ferrous ion:

$$Pu^{4+} + Fe^{2+} \rightleftarrows Fe^{3+} + Pu^{3+} \quad (7)$$

with the stabilizing effect of the sulfamate anion.

To keep the equilibrium in Eq. 7 shifted to the right, the Fe(II)-to-Fe(III) ratio must remain high. This may be accomplished by using a large excess of reductant or by adding an additional reductant that reduces Fe(III).

Among the disadvantages of $Fe(SO_3NH_2)_2$ in processing are the increased volumes of waste (Fe and SO_4^{2-}) that its addition generates and the generation of sulfate, which complexes Pu. Also, large excesses are required to obtain quantitative reduction of plutonium. The sulfamate does have the advantage that the rates of reduction are very high, even in reasonably high concentrations of nitric acid.

Electrolytically generated U(IV) stabilized with hydrazine has also been tested as a Pu reductant:

$$U^{4+} + 2Pu^{4+} + 2H_2O \longrightarrow 2Pu^{3+} + UO^{2+} + 4H^+ \qquad (8)$$

This process has been tested on small-scale equipment but has not been demonstrated in a full-scale operation. Since the U(IV) can be generated from uranyl nitrate in the system, no additional solid wastes are generated in this process. However, the relatively low stability of U(IV), the large excesses of U(IV) required for complete reduction [SCHULLER], and possible Pu contamination of the uranium product are problems yet to be solved [McKIBBEN-A]. In addition, this procedure requires electrochemical preparation and analysis of U(IV), a more involved procedure than addition of a measured amount of reductant.

Hydroxylamine has been employed as a reductant in the second cycle of the PUREX process at the Savannah River Plant [McKIBBEN-A, -B, -C]. Reduction of Pu^{4+} by HAN

$$2NH_3OH^+ + 4Pu^{4+} \longrightarrow 4Pu^{3+} + N_2O + H_2O + 6H^+ \qquad (9)$$

was found to be slower than reduction with Fe^{2+} (Eq. 7). However, since HAN also reduces Fe^{3+}

$$2NH_3OH^+ + 4Fe^{3+} \longrightarrow 4Fe^{2+} + N_2O + H_2O + 6H^+ \qquad (10)$$

hydroxylamine has been used in conjunction with ferrous sulfamate for Pu reduction. This combination of reductants takes advantage of the rapid kinetics of Fe^{2+} reduction and minimizes the quantities of sulfate and iron wastes that are generated during processing by using less ferrous sulfamate.

The use of HAN should also prove useful in valence-state adjustment of feed solutions that contain high concentrations of iron as a result of corrosion, dissolution of cladding material, or previous feed adjustments. Advantage may be taken of the HAN reduction of Fe^{3+} already present in solution to generate a high concentration of Fe^{2+} without further solid waste generation. Studies have shown that Fe^{3+} can be used in conjunction with HAN to reduce Pu(IV) more rapidly than with HAN alone [McKIBBEN-B], and that high Fe(II)/Fe(III) ratios can be obtained in solutions that initially contain high concentrations of Fe(III) by addition of HAN [McKIBBEN-C].

The preferred Pu-reducing agent for the modified PUREX/TRUEX process is ferrous sulfamate because of its better-documented chemistry. Since the raffinate from the TRUEX portion of this process will be nonTRU waste, the added volume due to iron and sulfate is less of a concern than in typical PUREX processing flowsheets, where the raffinate is a TRU waste stream. The use of hydroxylamine with ferrous sulfamate should also be considered, especially if the waste streams already have high iron concentrations, or if the waste volumes or sulfate concentration in the aqueous phase are constraints on the processing scheme.

b. Conditions for Pu Reduction

Unlike the reduction conditions of the PUREX process, where Pu(IV) in the organic phase is reduced to Pu(III) and stripped with dilute acid, the conditions of the modified-PUREX/TRUEX process require that the plutonium be present in the trivalent state in the feed solution to avoid extraction in the first set of contactors. Since the feed must contain sufficient nitrate (either as nitric acid or salts) to ensure complete uranium extraction, the problems associated with oxidation of plutonium by nitrate and nitrite will be more severe. However, evidence in the literature suggests that maintaining Pu(III) in the feed will not be a serious problem.

Several studies have shown that Pu(III) and high Fe(II)/Fe(III) ratios can be maintained in concentrated nitrate solutions for extended periods of time. The results of some of these studies are summarized in Table C-1. In general, Pu(III) and Fe(II) oxidation rates increase at higher concentrations of NO_3^- and elevated temperatures. Oxidation rates are also greatly affected by acidity--the higher the acidity at a given ionic strength, the faster Fe(II) is oxidized [JENKINS].

The effects of oxidation of Fe(II) and Pu(III) by NO_3^- combined with oxidation of these materials due to radiolysis in high activity waste solutions must be taken into account if the feed solution is to stand for an extended time before being fed into the extraction section. Studies have shown that addition of ferrous sulfamate to feed and/or scrub solutions just prior to extraction resulted in the best separations of uranium from plutonium [THOMPSON].

Because of the increased oxidation of Pu and Fe at high acidity, it is desirable to keep the acid concentration as low as possible in the feed for the PUREX extraction section in the modified-PUREX/TRUEX process. This will guarantee Pu(III) in solution. Maintaining low acid concentration is most easily accomplished by careful control of the dissolution process, neutralization of acidity with base [probably $Al(OH)_3$], or acidity reduction through denitrations (e.g., with sugar) [BRAY]. The choice of acidity control must be based on the type of fuel and dissolution procedure, the total nitrate concentration desired for extraction, and the amount of solid wastes generated, among other considerations.

The kinetics of Pu(IV) reduction by Fe(II) is rapid even at high acidity [CARLESON]. Only a few minutes are required to obtain the low distribution ratios

Table C-1. Studies of Pu(III) and Fe(II) Stability in Nitrate Solution

Aqueous	Reductant/Stabilizer	Results	Reference
2.5M HNO_3	0.102M Fe^{2+} 0.72M $SO_3NH_2^-$	100% Pu^{3+} after 28 days	[McKIBBEN-B]
2.5M HNO_3	0.08M Fe^{2+} 0.72M NH_2OH	100% Pu^{3+} after 28 days	[McKIBBEN-B]
0.2-2.0M HNO_3	0.0025M $Fe(SO_3NH_2)_2$	No change in Pu extraction by TBP for ≥25 days	[CARLESON]
6M HNO_3	0.05M $Fe(SO_3NH_2)_2$, 0.05M N_2H_4	~10% Fe oxidized in 8 h at 23°C	[BURNEY]
$Al(NO_3)_3/HNO_3$ Mixtures	0.009-0.019M $Fe(SO_3NH_2)_2$	Rate constants for Fe(II) oxidation	[THOMPSON]
$Al(NO_3)_3/HNO_3$ Mixtures	$Fe(SO_3NH_2)_2$	Increased Fe(II) oxidation at higher acidity	[JENKINS]

characteristic of Pu(III). This observation has been confirmed by the nearly complete stripping of Pu(IV) from TBP by a 4M $HNO_3/Fe(SO_3NH_2)_2$ scrub in mixer-settler tests performed at the Savannah River Plant [THOMPSON].

Because of the very short residence times encountered in annular centrifugal contactors, reduction of Pu(IV) may not be rapid enough to ensure complete Pu rejection using a solution containing ferrous sulfamate as a scrub of the loaded organic phase, should Pu(IV) be extracted. It is desirable to use excess reductant and/or stabilizer in the extraction stage to guarantee the predominance of Pu(III) in the feed rather than to rely on plutonium reduction and back-extraction in the scrub section.

Based on the assumptions that the feed will be no more than 5M NO_3^- with an acidity in the 1 to 5M range and that the processing will be performed at 30-45°C, the rate constants determined by Thompson et al. [THOMPSON] can be used as a guide to the rate of Fe(II) oxidation. This value is then used to determine the amount of ferrous sulfamate necessary to maintain the high Fe(II)/Fe(III) ratio for Pu reduction, as well as the maximum time before processing that the Fe(II) should be added. Concentrations of ferrous ion of 0.02 to 0.05M (either added to the feed or generated in situ by reduction of Fe^{3+} in solution with HAN and stabilized with sulfamate, hydrazine, or HAN) should maintain Pu(III) in the feed for several hours. Tests on actual feed solutions will, of course, be necessary to determine the optimal conditions for valence state adjustment.

c. Pu-U Separation

Since the distribution ratios for U(VI) extraction by TBP are higher than those for Pu(III) by two to three orders of magnitude [ALCOCK, BEST], separation of these two metal

ions should be accomplished in only a few extraction stages if the reduction of Pu is complete. If any Pu(IV) is extracted, a scrub of HNO_3 containing $Fe(SO_3NH_2)_2$ can be employed to reduce it and back-extract Pu(III), if the kinetics of reduction and the residence times in the contactors are compatible.

In addition to U-Pu separation based on oxidation state, the rejection of Pu can also be enhanced by operation of the PUREX process at high levels of uranium loading. Reducing the concentration of free TBP (that not complexed with uranium) further reduces the distribution ratios for plutonium [CARLESON, BEST] and increases the separation factors. High uranium loadings are also beneficial in increasing the decontamination factors for many fission products [GMELIN].

d. Neptunium Valence Adjustment, Extraction, and Stripping (Recovery)

The use of ferrous sulfamate to obtain Pu(III) in solution also has as a side benefit the reduction of neptunium to the tetravalent state [JENKINS]. This reduction has been used for coextracting neptunium with uranium in the processing of enriched uranium [LEWIS, FLANARY] and for its separation from plutonium [THOMPSON]. Although Np(IV) is not as extractable as U(VI) [ALCOCK], the distribution ratios are still high enough to allow for U-Np coextraction and separation from Pu(III). Recoveries of 98% neptunium using Fe(II) reduction and TBP extraction have been reported [THOMPSON].

Extracted neptunium has been separated from uranium in PUREX process schemes by choosing appropriate strip solutions and conditions. Advantage is taken of the lower Np(IV) distribution ratios to selectively strip Np from U with dilute nitric acid. Processes at Oak Ridge [FLANARY, LEWIS] and Hanford [ISAACSON] have used 0.01 to 0.50M HNO_3 to strip Np from U in TBP extractant systems.

In the absence of valence-state adjustment, neptunium (present in the +5 and +6 states) does not report specifically to either the aqueous or organic phases [LEWIS]. This results in poor Np separation and significant losses of material in the raffinate.

e. Adjustment of Pu Oxidation State in TRUEX Feed

The raffinate from the PUREX section of the modified-PUREX/TRUEX process must be adjusted to become the feed for the TRUEX process. With careful choice of the PUREX feed and scrub solutions, the only major adjustment that should be required is the oxidation of plutonium to Pu(IV).

The Pu(III) to Pu(IV) transformation, which must be suppressed in the PUREX feed solution, is readily and easily obtainable. Studies have shown that oxidation of Pu(III) by NO_2^- (Eq. 3) is fast and complete in HNO_3 solution when sufficient nitrite is present [CARLESON]. The second-power hydrogen ion dependence of this reaction favors oxidation at high acidities.

The presence of excess ferrous sulfamate and/or stabilizers in the PUREX raffinate necessitates the addition of excess nitrite to obtain complete Pu oxidation. Excess nitrite will be

consumed in the decomposition of sulfamate (Eq. 4) or stabilizers, such as hydrazine (Eq. 5, 6), as well as in the oxidation of Fe(II).

Addition of nitrite (most likely as $NaNO_2$) will, of course, increase the volume of waste generated in the TRUEX process. Hence, large excesses of nitrite should be avoided. The amount of nitrite to be added is a function of the amount of ferrous sulfamate and other stabilizers added to solution, as well as the acidity and time that the aqueous phase stands following addition of reductant. For highly acidic solutions and reasonably long standing times, destruction of stabilizers and Fe(II) by HNO_3 will minimize the amount of nitrite required.

f. Conclusions

The use of ferrous sulfamate (in combination with other reductants or stabilizers, if necessary) seems the most straightforward method of valence-state adjustment for the PUREX process feed in the modified-PUREX/TRUEX solvent extraction scheme. Variations in acidity, nitrate concentration, time, temperature, and activity in the feed have to be considered in determining the quantity of reductant to be added. The amount of solid waste generated and the presence of iron already in solution are important considerations in the choice of relative concentrations of ferrous sulfamate and other reductants (e.g., HAN) and stabilizers (HAN, N_2H_4) to be added to the feed.

Reduction with Fe(II) will generate Np(IV), which will report with U(VI) to the organic phase, and Pu(III), which will remain in the raffinate. Separation of Np and U can be accomplished by selective stripping of Np with dilute HNO_3.

The PUREX raffinate, following oxidation of the Pu to Pu(IV), can be used as the feed to the TRUEX process. Addition of $NaNO_2$ to destroy excess stabilizers and oxidize Pu(III) and Fe(II) appears to be the simplest procedure for this feed adjustment.

Extraction of Pu(IV), rather than Pu(III) in the TRUEX process, will allow selective stripping of Am and Pu for their mutual separation.

2. Effects of Feed Composition on the TRUEX Solvent Extraction Process

The data in Tables C-2 and C-3 lead to several important conclusions about the feed composition appropriate for TRUEX processing. The three most important feed constituent concentrations for TRUEX processing are those of oxalate, nitrate, and hydrogen ions. The effects of variations in the concentrations of these three species have been discussed elsewhere [VANDEGRIFT-B] and are summarized below.

a. Oxalate

The addition of oxalic acid to high-level waste feeds is essential to providing a high decontamination factor for the actinide elements from iron, zirconium, and noble metal ions. The aqueous-phase oxalate complexes of these metals are far less extractable by the TRUEX

Table C-2. Feed Compositions used to Measure Distribution Ratios of Various Species in TRUEX Extraction

	Solvent			Aqueous Phase					
System[a]	[CMPO], M	[TBP], M	Diluent	Desig.	$[H^+]$, M	$[NO_3^-]$, M	$[H_2Ox]$,[b] M	[Al], M	[Fe], M
1	0.20	1.40	Conoco C_{12}-C_{14}[c]	CC[d]	0.97	6.4	0.2	0.037	0.029
2	0.20	1.40	Conoco C_{12}-C_{14}	Scrub	0.5	0.53	0	0	0.01
3	0.20	1.40	Conoco C_{12}-C_{14}	CC	0.4	5.9	0	0.041	0.030
4	0.20	1.40	Conoco C_{12}-C_{14}	CC	1.0	6.4	0	0.037	0.029
5	0.20	1.40	Conoco C_{12}-C_{14}	CC	1.0	6.4	0.2	0.037	0.029
6	0.20	1.40	Conoco C_{12}-C_{14}	CC	2.6	6.4	0	0.021	0.019
7	0.20	1.40	Conoco C_{12}-C_{14}	CC	2.0	7.1	0.2	0.032	0.026
8	0.20	1.40	Norpar 12[e]	DSW[f]	1.0	1.9	0	0.046	0.15
9	0.20	1.40	Norpar 12	DSW	1.0	1.9	0.05	0.046	0.15
10	0.20	1.40	Conoco C_{12}-C_{14}	DSW	1.0	1.9	0.05	0.046	0.15
11	0.20	1.40	Norpar 12	DSW	1.0	1.9	0.10	0.046	0.15
12	0.20	1.40	Conoco C_{12}-C_{14}	DSW	1.0	1.9	0.10	0.046	0.15
13	0.20	1.40	Norpar 12	DSW	1.0	1.9	0.20	0.046	0.15
14	0.20	1.40	Conoco C_{12}-C_{14}	DSW	1.0	1.9	0.20	0.046	0.15
15	0.20	1.40	Conoco C_{12}-C_{14}	DSW[g]	1.0	1.9	0.25	0.046	0.15
16	0.20	1.40	Norpar 12	CAW[h]	1.0	3.0	0.10	0.71	0.13
17	0.20	1.40	Norpar 12	CAW	1.0	3.0	0.10	0.71	0.13
18	0.20	1.40	Norpar 12	CAW	1.0	3.0	0.10	0.71	0.13
19	0.20	1.40	Norpar 12	AW[i]	1.0	3.0	0.10	0.60	0.15
20	0.20	1.40	Conoco C_{12}-C_{14}	SFP[j]	1.0	1.0	0.10	0	0.0015
21	0.20	1.40	Conoco C_{12}-C_{14}	SFP	3.0	3.0	0.10	0	0.0015
22	0.20	1.40	Conoco C_{12}-C_{14}	SFP	6.0	6.0	0.10	0	0.0015
23	0.25	0.75	Decalin	HLW[k]	5.3	7.1	0	0.7	[n]
24	0.25	0.75	Decalin	Scrub	1.5	1.5	0.075	0	0
25	0.4	0	DEB[l]	HLW[m]	2.4	[n]	0.075	[n]	[n]
26	0.25	0.75	CCl_4	PFP[o]	1.0	3.0	0	0.38	0.03

[a]Reference number that corresponds to distribution ratios in Table C-3.
[b]Total oxalic acid concentration in solution.
[c]Synthetic complexant solution is typically of a concentrated raffinate from the separation of ^{90}Sr from high-level waste [VANDEGRIFT-A].
[d]Conoco C_{12}-C_{14} is a commercial mixture of normal paraffinic hydrocarbons (NPH) with an average carbon number of 13.2.
[e]Norpar 12 is a commercial NPH with an average carbon number of 11.5.
[f]Synthetic dissolved sludge waste defined in [VANDEGRIFT-B].
[g]Data from a batch-countercurrent experiment; aqueous feed was a mixture of 1 part DSW + 0.17 parts (2.5M HNO_3 + 0.06M H_2Ox) + 0.17 parts (0.5M HNO_3).
[h]Synthetic current acid waste defined in [VANDEGRIFT-B].
[i]Synthetic acid waste defined in [HORWITZ-A].
[j]Standard fission product mixture defined in [HORWITZ-B].
[k]Synthetic high level waste defined in [HORWITZ-C].
[l]Diethyl benzene.
[m]Synthetic high level waste defined by [HORWITZ-A].
[n]Not defined.
[o]Plutonium Finishing Plant Waste is defined elsewhere [LEONARD].

Table C-3. Effect of Temperature on Distribution Ratios of Various Species in TRUEX Extraction

System[a]	Org/Aq Volume Phase Ratio	Temp., °C	Distribution Ratio								
			Al	Fe	Mn	Mo	Pd	Ru	Zr	Am	Pu
1	1/8.25[b]	30	0.013	0.034	0.1	-	2	0.91	0.007	38	12
2	4	30	0.04	0.040	<0.02[c]	-	2	7	0.05	10	540
3	1	23	0.008	0.20	0.33	-	0.9	0.2	0.03	400	180[d]
4	1	23	0.010	0.32	0.40	-	0.3	0.2	0.07	260	1070[d]
5	1	23	0.010	0.011	0.32	-	<0.08	0.08	<0.004	160	2.2[d]
6	1	23	0.04	0.33	0.17	-	0.1	0.1	0.89	33	410[d]
7	1	30	-	-	-	-	-	-	-	80	55
8	1/2	40	0.006	0.06	0.008	1.21	1.58	0.35	13.0	11	-
9	1/2	40	0.007	0.06	0.010	0.81	1.13	0.31	1.4	11	-
10	1/2	40	0.012	0.06	0.008	0.80	0.71	0.39	0.58	10	-
11	1/2	40	0.004	0.05	0.009	0.44	0.71	0.33	0.24	9.4	-
12	1/2	40	0.010	0.06	0.010	0.31	0.65	0.38	0.13	10	-
13	1/2	40	0.04	0.03	0.009	0.28	0.44	0.32	0.02	8.4	-
14	1/2	40	<0.006	0.04	0.01	0.11	0.44	0.30	0.013	6.1	-
15	1/2	40	<0.01	0.044	0.012	0.11	<0.1	[e]	0.015	7.5	35
16	1/2	30	-	-	-	-	-	-	-	19.6	-
17	1/2	40	-	-	-	-	-	-	-	15.8	-
18	1/2	50	-	-	-	-	-	-	-	12.1	-
19	1/2	50	0.0014	0.11	-	0.38	0.64	0.38	2.8	12	-
20	1/2	40	-	0.017	-	0.08	0.23	0.22	0.005	7.2	-
21	1/2	40	-	0.077	-	0.15	0.22	1.1	0.039	11	-
22	1/2	40	-	2.3	-	1.1	0.21	0.38	2.7	8.3	-
23	1/2	50	-	5	-	10.	<0.02	0.05	15	3.9	$>10^3$
24	2	50	-	<0.01	-	<0.1	-	-	<0.01	6.6	$>10^3$
25	1	50	-	0.08	-	0.66	0.19	0.083	0.19	9.4	-
26	1/3	30	<0.001	0.061	<0.01	-	-	-	-	17	2000

[a]Reference number that corresponds to solution composition in Table C-2.
[b]Phases were not equilibrated before contact.
[c]"<" in front of a distribution ratio value means that the concentration of the species in the organic phase was below detectability; the value shown is the detectability limit for the element divided by its aqueous phase concentration.
[d]Measured at 30°C.
[e]D_{Ru} decreased from stage to stage from 0.3 to 0.034; this is evidence for more than one Ru species in the aqueous phase.

solvent than are their hydrated ions. The data also show, however, that too high an oxalate concentration can also repress the extractability of plutonium due to the strong tendency of Pu(IV) to form oxalate complexes. There is also a possibility of precipitating oxalate salts of actinide and lanthanide ions at high oxalate concentrations.

Because oxalic acid is a dibasic acid and because the oxalate ion complexes metal ions, the hydrogen ion concentration is an important parameter in determining the extent of oxalate complexing of a metal species. Because metal ions (such as iron and aluminum) are also

complexed by oxalate, their concentrations in feeds also are a consideration in deciding on the amount of oxalic acid to add to the feed.

b. Nitrate

Metal ions are extracted from nitrate media by CMPO as neutral nitrate salts:

$$Am^{3+}_{Aq} + 3NO_3^- + 3CMPO_{Org} \rightleftarrows Am(NO_3)_3 \bullet 3CMPO_{Org} \quad (11)$$

$$Pu^{4+}_{Aq} + 4NO_3^- + 2CMPO_{Org} \rightleftarrows Pu(NO_3)_4 \bullet 2CMPO_{Org} \quad (12)$$

$$UO_2^{2+}_{Aq} + 2NO_3^- + 2CMPO_{Org} \rightleftarrows UO_2\,(NO_3)_2 \bullet 2CMPO_{Org} \quad (13)$$

Therefore, the americium extractability increases as the cube of the aqueous-phase nitrate concentration; plutonium extractability increases as $[NO_3^-]^4$; and uranyl ion extractability increases as $[NO_3^-]^2$. These metal ions are extracted into the TRUEX solvent from aqueous solutions with high nitrate concentrations and are stripped into solutions of dilute nitrate. [Because Pu(IV) is so strongly extracted into the TRUEX solvent, its strip solution must also contain an aqueous complexing species such as fluoride or oxalate.]

c. Hydrogen Ion

In general, increasing aqueous acidities at constant nitrate ion concentrations drops the extractability of metal nitrate salts by the competition for CMPO molecules by nitric acid. Figure C-2 illustrates the effect of adding hydrogen ion and nitrate ion together, as HNO_3. The effect of increasing nitrate ion by increasing the nitric acid concentration tends to increase the distribution ratio of Am (D_{Am}) until the counter effect of nitric acid extraction becomes important; D_{Am} reaches a maximum and then decreases with increasing nitric acid concentration.

Table C-4 shows the ranges of concentration of important species in the feed for the TRUEX process section. Within this range, flow ratios and the number of stages in the extraction, scrub, two strip, and solvent wash sections can be modified to meet product and waste stream criteria.

3. Effects of Feed Composition on Modified-PUREX Solvent Extraction Process

Because TBP also extracts nitric acid and neutral nitrate salts of Np(IV) and UO_2^{2+}, high nitrate concentration and low acidity are also conductive to high distribution ratios for these metal ions in the modified-PUREX section of the process. Also, as discussed previously, maintaining the nitric acid concentration below 2M is important to stabilizing Pu(III) in the feed solution,

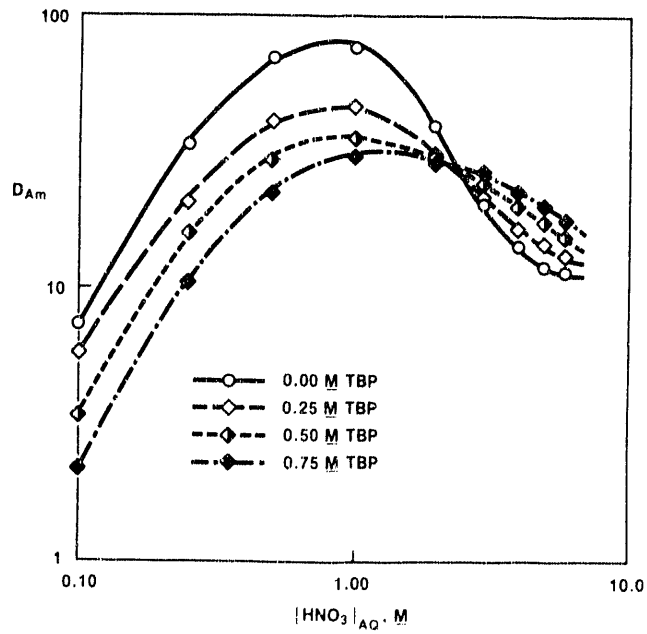

Fig. C-2. Acid Dependency of D_{Am} for 0.25M CMPO in Decalin as a Function of Added TBP at 25 °C [VANDEGRIFT-B].

Table C-4. Ranges of Concentrations for Species Important to TRUEX Processing of Fission-Product-Containing Solutions of Pu and Am

		Problem If Outside of Range	
Species	Range, M	Lower	Higher
Oxalate	0.05-0.3[a]	High extraction of Fe, Zr, and noble metals	Low extraction of Pu(IV)
Nitrate	1-9	Poor extraction of Am	Possible precipitation of nitrate salts
Hydrogen Ion	0.2-7	Polymerization and/or disproportionation of Pu(IV)	Lowering of the extractability of Pu and Am, possible third-phase formation

[a]Concentration of oxalate is set by the concentrations of Fe and Al in solution and the acidity in feed.

thus preventing its extraction into the PUREX solvent. The following general considerations were based on four literature references [LEWIS, JENKINS, FLANARY, ALCOCK]:

- Nitric acid concentration in the feed should be kept in the range 0.2-2M.

- Total nitrate should be in the range 3-9M.

- The TBP should not be loaded by UO_2^{2+} to saturation (a range of 60 to 80% seems appropriate).

- A low (0.01-0.02M) concentration of oxalic acid can be added to repress the extraction of Zr; because Np(IV) is complexed strongly by oxalate ion, this concentration must be carefully controlled.

Although the literature data have shown that the process is workable and reliable, laboratory work needs to be performed using batch distribution-ratio measurements to choose proper feed and PUREX solvent compositions. The great flexibility of phase ratios possible in centrifugal contactors can be used to concentrate and to purify the Np and U product streams to a degree not possible with the pulsed columns used in earlier studies.

4. Estimates of Relative Flow Rates for Process Streams

a. Modified-PUREX Process

The following assumptions (based on dissolving a typical 10-year-cooled fuel rod from a PWR) were made to estimate the relative flow rates of process streams:

- Feed = 100-200 g U/per liter.

- Solvent = 1.2M TBP in tetrachloroethylene.

- Maximum solvent loading = 60-80%.

- Scrub flow rate = (1/10-1/5) x feed flow rate.

- Np-strip flow rate = (1/10-1/4) x solvent flow rate.

- U-strip solution = 60-120 g U/per liter.

A typical PWR fuel rod (10-year-cooled) has the composition given in Table C-5. The expected range of process stream flows are listed in Table C-6.

b. TRUEX

The following assumptions were made to estimate the relative flow rates of process streams:

- The raffinate of the modified-PUREX step is altered for TRUEX processing with no volume change.

Table C-5. Composition of Typical 10-Year-Cooled PWR Fuel [CROFF]

Element	g/kg HM[a]	mol/kg HM
U	956	4.0
Pu	8.1	0.0034
Np	0.4	0.002
Am	0.5	0.002
REFP[b]	9.8	0.065

[a]HM = heavy metal.
[b]Rare earth fission products.

Table C-6. Relative Stream Flows for the Modified-PUREX Section of the Process

Stream	L/kg U
Feed	5-10
Scrub	1-2
Solvent	8-13
Np Strip	1-3
U Strip	8-17
Raffinate	6-12

- Solvent = 0.25M CMPO and 0.25-1.0M TBP in tetrachloroethylene.
- Maximum solvent loading = 20-50%.
- Scrub flow rate = 1/5 x solvent flow rate.
- Am-strip flow rate = (0.8-2) x solvent flow rate.
- Pu-strip flow rate = (0.2-1) x solvent flow rate.

The expected ranges of process stream flows are listed in Table C-7.

Table C-7. Relative Stream Flows for the TRUEX Section of the Process

Stream	L/kg U
Feed	6-12
Scrub	0.5-1
Solvent	2.5-6
Am Strip	2-12
Pu Strip	1-6
Raffinate	6.5-13

REFERENCES FOR APPENDIX C

ALCOCK

K. Alcock, G. F. Best, E. Hesford, and H. A. C. McKay, "Tri-n-Butyl Phosphate as an Extracting Solvent for Inorganic Nitrates. V: Further Results for the Tetra and Hexavalent Actinide Nitrates," J. Inorg. Nucl. Chem. 6, 328 (1958).

BEST

G. F. Best, H. A. C. McKay, and P. R. Woodgate, "Tri-n-Butyl Phosphate as an Extracting Solvent for Inorganic Nitrates. III: The Plutonium Nitrates," J. Inorg. Nucl. Chem. 4, 315 (1957).

BRAY

L. A. Bray, Denitration of PUREX Wastes with Sugar, Hanford Atomic Products Operations Report, HW-76973 Rev (1963).

BURNEY

G. A. Burney, Ind. Eng. Chem. Process Design Develop. 3, 328 (1964).

CARLESON

G. Carleson, "Extraction of Plutonium," Proc. of 2nd U.N. Int. Conf. on the Peaceful Uses of Atomic Energy, Vol. 17, p. 111 (1958).

CLEVELAND

J. M. Cleveland, The Chemistry of Plutonium, American Nuclear Society, La Grange Par, IL (1979).

CROFF

A. G. Croff, M. A. Bjerke, G. W. Morrison, and L. M. Petrie, Revised Uranium-Plutonium Cycle PWR and BRW Models for the Origen Computer Code, Oak Ridge National Laboratory Report, ORNL/TM-6051 (September 1958).

FLANARY

J. R. Flanary and J. H. Goode, "Recovery of Enriched Uranium from Uranium Dioxide-Stainless Steel Fuel Elements by Solvent Extraction," Ind. Eng. Chem. 51, 23 (1959).

GMELIN

Gmelin Handbuch der Anorganischen Chemie, Vol. 8, Auflage, Transurane, Teil A1, II, p. 219 (1974).

HORWITZ-A

E. P. Horwitz, H. Diamond, and D. G. Kalina, "Carbamoylmethylphosphoryl Derivatives as Actinide Extractants: Their Significance in the Processing and Recovery of Plutonium and Other Actinides," in Plutonium Chemistry, ACS Symposium Series, No. 216, W. C. Carnall and G. Choppin, Eds., American Chemical Society, Washington, DC, p. 433 (1983).

HORWITZ-B

E. P. Horwitz, D. G. Kalina, H. Diamond, G. F. Vandegrift, and W. W. Schulz, "The TRUEX Process--A Process for the Extraction of the Transuranic Elements from Nitric Acid Wastes Utilizing Modified Purex Solvent," Sol. Ext. Ion Exch. 3, 75 (1985).

HORWITZ-C

E. P. Horwitz, H. Diamond, D. G. Kalina, L. Kaplan, and G. W. Mason, "Octyl(phenyl)-N,N-diisobutylcarbamoylmethylphosphine Oxides as an Extractant for Actinides from Nitric Acid Waste," presented at the Int. Solvent Extraction Conf. (ISEC'83), Denver, CO, August 27-September 2, 1983.

ISAACSON

R. E. Isaacson and B. F. Judson, "Neptunium Recovery and Purification at Hanford," Ind. Eng. Chem. Process Des. Dev. 3, 296-301 (1964).

JENKINS

I. L. Jenkins, "Factory Governing the Choice of a $^{237}Np/^{238}Pu$ Separation Process," Actinides Rev. 1, 187 (1969).

LEONARD

R. A. Leonard, G. F. Vandegrift, D. G. Kalina, D. F. Fischer, W. R. Bane, L. Burris, E. P. Horwitz, R. Chiarizia, and H. Diamond, The Extraction and Recovery of Plutonium and Americium from Nitric Acid Waste Solutions by the TRUEX Process - Continuing Development Studies, Argonne National Laboratory Report ANL-85-45 (September 1985).

LEWIS

W. H. Lewis, "Americium and Neptunium Recovery Processes," Proc. of 2nd U.N. Int. Conf. on the Peaceful Uses of Atomic Energy, Vol. 17, p. 236 (1958).

McKIBBEN-A

J. M. McKibben, Chemistry of the PUREX Process, E. I. duPont de Nemours & Company Report, DPSPU-83-272-1 (1983)

McKIBBEN-B

J. M. McKibben and J. E. Bercaw, Hydroxylamine Nitrate as a Plutonium Reductant in the PUREX Solvent Extraction Process, E. I. duPont de Nemours & Company Report, DP-1248 (1971).

McKIBBEN-C

J. M. McKibben, D. F. Chostner, and E. G. Orebaugh, Plutonium-Uranium Separation in the PUREX Process Using Mixtures of Hydroxylamine Nitrate and Ferrous Sulfamate, E. I. duPont de Nemours & Company Report, DP-1656 (1983).

SCHULLER

W. Schuller, F. Baumgartner, H. Krause, and H. Dyroff, "Start-up Experience with the Karlsruhe Reprocessing Plant and Long-Range Fuel Reprocessing Developed Objectives in the Federal Republic of Germany," Proc. of 4th Int. Conf. on the Peaceful Uses of Atomic Energy, Vol. 8, p. 483 (1972).

THOMPSON

M. C. Thompson, G. A. Burney, and M. L. Hyder, Neptunium and Plutonium Valence Adjustment in Enriched Uranium Processing, E. I. duPont de Nemours & Company Report, DP-1396 (1976).

VANDEGRIFT-A

G. F. Vandegrift, unpublished data.

VANDEGRIFT-B

G. F. Vandegrift, R. A. Leonard, M. J. Steindler, E. P. Horwitz, L. J. Basile, H. Diamond, and L. Kaplan, Transuranic Decontamination of Nitric Acid Solutions by the TRUEX Solvent Extraction Process-Preliminary Development Studies, Argonne National Laboratory Report, ANL-84-45 (July 1984).

Distribution for ANL-89/37

Internal:

J. E. Battles
R. L. Breyne
D. J. Chaiko
D. B. Chamberlain (20)
L. S. H. Chow
C. J. Conner
J. M. Copple
D. R. Fredrickson
E. C. Gay
J. E. Harmon
J. C. Hoh
E. P. Horwitz
R. A. Leonard
J. R. McCreary
N. Meshkov
B. Misra
F. C. Mrazek
P. A. Nelson
M. C. Regalbuto
L. Reichley-Yinger
W. B. Seefeldt
J. L. Settle
M. J. Steindler
I. R. Tasker
C. E. Till
L. E. Trevorrow
G. F. Vandegrift (12)
E. H. Van Deventer
S. Vogler
M. O. Wasserman
ANL Patent Dept.
ANL Contract File
TIS Files (3)

External:

DOE-OSTI (2)
ANL Library
Manager, Chicago Operations Office, DOE
T. A. Baillieul, DOE-CH
D. T. Goldman, DOE-CH
J. Haugen, DOE-CH
S. A. Mann, DOE-CH
A. L. Taboas, DOE-CH-AAO
Chemical Technology Division Review Committee Members:
  S. Baron, Brookhaven National Laboratory, Upton, NY
  N. Jarrett, Noel Jarrett Associates, Lower Burrell, PA
  L. Newman, Brookhaven National Laboratory, Upton, NY
  J. Stringer, Electric Power Research Institute, Palo Alto, CA
  J. B. Wagner, Arizona State University, Tempe, AZ
  R. G. Wymer, Oak Ridge National Laboratory, Oak Ridge, TN
  E. B. Yeager, Case Western Reserve University, Cleveland, OH
M. G. Adamson, Lawrence Livermore National Laboratory, Livermore, CA
J. T. Bell, Oak Ridge National Laboratory, Oak Ridge, TN
C. L. Bendixsen, Westinghouse Idaho Nuclear Co., Idaho Falls, ID
S. E. Berk, Office of Fusion Energy, USDOE, Germantown, MD
J. J. Blakeslee, Rockwell International, Golden, CO
D. F. Bowersox, Los Alamos National Laboratory, Los Alamos, NM
L. Brewer, University of California, Berkeley, CA
M. Coops, Lawrence Livermore National Laboratory, Livermore, CA
A. G. Croff, Oak Ridge National Laboratory, Oak Ridge, TN
D. Cubicciotti, Electric Power Research Institute, Palo Alto, CA

H. T. Davis, University of Minnesota, Minneapolis, MN
M. Dinehart, Los Alamos National Laboratory, Los Alamos, NM
M. M. Doxtader, George R. Harrison Spectroscopy Laboratory, Cambridge, MA
M. Duff, USDOE, Defense Waste & Transport. Management, USDOE, Germantown, MD
L. P. Duffy, Office Environ. Restor. & Waste Manage., USDOE, Germantown, MD
C. W. Frank, Office Environ. Restor. & Waste Manage., USDOE, Germantown, MD
J. D. Griffith, Systems Development & Technol., USDOE, Germantown, MD
W. S. Groenier, Oak Ridge National Laboratory, Oak Ridge, TN
G. M. Haas, Office of Fusion Energy, USDOE, Germantown, MD
K. Hain, BDM, USDOE, Germantown, MD
R. R. Hobbins, EG&G Idaho, Inc., Idaho Falls, ID
J. O. Honeyman, Westinghouse Hanford Operations, Richland, WA
S. Howell, Los Alamos National Laboratory, Los Alamos, NM
P. C. Hsu, U.S. Dept. of Agriculture, Food Safety & Inspection, Washington, DC
J. Hunter, Richland Operations Office, USDOE, Richland, WA
L. J. Jardine, Lawrence Livermore National Laboratory, Livermore, CA
J. J. Jicha, USDOE, New Production Department, Washington, DC
R. T. Jubin, Oak Ridge National Laboratory, Oak Ridge, TN
M. A. Knecht, EG&G Idaho, Inc., INEL, Idaho Falls, ID
D. C. Kocher, Oak Ridge National Laboratory, Oak Ridge, TN
G. Kosiancic, Westinghouse Hanford Company, Richland, WA
M. Levenson, Bechtel National, Inc., San Francisco, CA
S. C. T. Lien, Idaho Operations Office, Idaho Falls, ID
T. B. Lindemer, Oak Ridge National Laboratory, Oak Ridge, TN
Los Alamos National Laboratory, Director, Los Alamos, NM
A. Malinauskis, Oak Ridge Naional Laboratory, Oak Ridge, TN
W. H. McVey, USDOE, Division of LMFBR Fuel Cycle Projects, Germantown, MD
A. C. Muscatello, Los Alamos National Laboratory, Los Alamos, NM
A. J. Naser, Westinghouse Hanford Company, Richland, WA
L. Nelson, Sandia Corporation, Albuquerque, NM
M. O'Hara, Martin Marietta Energy Systems, Y-12 Plant, Oak Ridge, TN
D. R. Olander, University of California, Berkeley, CA
A. L. Olson, Westinghouse Idaho Nuclear Co., Inc., Idaho Falls, ID
D. A. Orth, Savannah River Laboratory, Aiken, SC
V. M. Oversby, Lawrence Livermore National Laboratory, Livermore, CA
M. Palmer, Los Alamos National Laboratory, Los Alamos, NM
G. Pfennigworth, Martin Marietta Energy Systems, Oak Ridge, TN
R. L. Ritzman, Electric Power Research Institute, Palo Alto, CA
S. Rosen, Dept. of Nuclear Energy, USDOE, Germantown, MD
M. W. Shupe, USDOE, Idaho Operations Office, Idaho Falls, ID
E. Soldberg, Richland Operations Office, USDOE, Richland, WA
J. Szenasi, Albuquerque Operations Office, USDOE, Albuquerque, NM
D. W. Tedder, Georgia Institute of Technology, Atlanta, GA
T. A. Todd, Westinghouse Idaho Nuclear Co., Inc., Idaho Falls, ID

D. A. Turner, Westinghouse Hanford Company, Richland, WA
USDOE, Office of Basic Energy Sciences, Washington, DC
C. E. Weber, Office of International Programs, USDOE, Germantown, MD
E. Wheelwright, Pacific Northwest Laboratory, Richland, WA
D. D. Wodrich, Westinghouse Hanford Company, Richland, WA
S. Yarbro, Los Alamos National Laboratory, Los Alamos, NM

END

DATE
FILMED
10/21/92