12/9-8-92 JS (1)

PNL-8223
UC-721

Decontamination Testing of Radioactive-Contaminated Stainless Steel Coupons Using A Ce(IV) Solution

L. A. Bray
M. R. Elmore
K. J. Carson
R. J. Elovich
G. M. Richardson
L. D. Anderson

August 1992

Prepared for the U.S. Department of Energy
under Contract DE-AC06-76RLO 1830

Pacific Northwest Laboratory
Operated for the U.S. Department of Energy
by Battelle Memorial Institute

Battelle

PNL-8223

DISTRIBUTION OF THIS DOCUMENT IS UNLIMITED

DISCLAIMER

This report was prepared as an account of work sponsored by an agency of the United States Government. Neither the United States Government nor any agency thereof, nor Battelle Memorial Institute, nor any of their employees, makes **any warranty, expressed or implied, or assumes any legal liability or responsibility for the accuracy, completeness, or usefulness of any information, apparatus, product, or process disclosed, or represents that its use would not infringe privately owned rights.** Reference herein to any specific commercial product, process, or service by trade name, trademark, manufacturer, or otherwise does not necessarily constitute or imply its endorsement, recommendation, or favoring by the United States Government or any agency thereof, or Battelle Memorial Institute. The views and opinions of authors expressed herein do not necessarily state or reflect those of the United States Government or any agency thereof.

PACIFIC NORTHWEST LABORATORY
operated by
BATTELLE MEMORIAL INSTITUTE
for the
UNITED STATES DEPARTMENT OF ENERGY
under Contract DE-AC06-76RLO 1830

Printed in the United States of America

Available to DOE and DOE contractors from the Office of Scientific and Technical Information, P.O. Box 62, Oak Ridge, TN 37831; prices available from (615) 576-8401. FTS 626-8401.

Available to the public from the National Technical Information Service, U.S. Department of Commerce, 5285 Port Royal Rd., Springfield, VA 22161.

PNL—8223

DE92 019802

DECONTAMINATION TESTING OF RADIOACTIVE-CONTAMINATED STAINLESS STEEL COUPONS USING A Ce(IV) SOLUTION

L. A. Bray
M. R. Elmore
K. J. Carson
R. J. Elovich
G. M. Richardson
L. D. Anderson

August 1992

Prepared for
the U.S. Department of Energy
under Contract DE-AC06-76RLO 1830

Pacific Northwest Laboratory
Richland, Washington 99352

MASTER

DISTRIBUTION OF THIS DOCUMENT IS UNLIMITED

SUMMARY

The current Hanford Waste Vitrification Plant (HWVP) reference process for canister decontamination describes an air-atomized frit/water slurry blaster developed for the Defense Waste Processing Facility (DWPF). Westinghouse Hanford Company (WHC) identified incentives to evaluate potential HWVP cost savings from adapting the Ce(IV)/HNO_3 canister decontamination approach being developed for the West Valley Demonstration Project (WVDP) at West Valley, New York. Development studies were recommended by WHC to address issues related to further assessment of the adaptation of the Ce(IV)/HNO_3 decontamination system to HWVP, and to resolve a number of technical uncertainties.

Laboratory studies at the Pacific Northwest Laboratory (PNL) were performed to provide further data to support the selection of an effective flowsheet for the Ce(IV)/HNO_3 decontamination of HWVP stainless steel (SS) vitrification canisters. The results reconfirmed the predictability of this unique chemical milling and decontamination process. The results were equivalent to those found in Bray's initial WVDP study (1988). A thin layer (2.5 to 5 μm) of oxidized SS metal surface was effectively removed from 304L coupons by chemical milling with a 0.5 M to 1 M HNO_3 solution containing ~1.4 to 2.7 moles of Ce(IV) per square meter of surface area to provide adequate radioactive surface decontamination. Nitric acid treatment alone was not sufficient to provide adequate decontamination in either study. A chemical milling contact time of 6 h at 65°C was adequate to decontaminate the coupons to levels below the Waste Acceptance Preliminary Specifications (WAPS) (DOE 1990) of <2,200 disintegrations per minute (dpm) gamma of smearable contamination per 100 cm^2 of surface.

The decontamination process developed in the laboratory will be scaled up by a factor of 5,000:1 and tested in FY 1992 by the WVDP at West Valley using uncontaminated full-scale glass-filled canisters. An engineering uncertainty remains to be resolved concerning the removal of a layer of loosely held oxide, some of which may remain on the SS surface after removal of the

canister from the decontamination solution. In this laboratory study, low-pressure water from a standard laboratory wash bottle was used to rinse the surfaces of the test coupons. WVDP will test a series of jet nozzles to thoroughly wash the decontaminated canister. Data obtained from the full-scale WVDP test program will include confirmation of the required soak time, temperature, Ce(IV)/HNO_3 concentration, and design of the decontamination equipment. These results will be monitored and evaluated for applicability to HWVP canister decontamination. Ultrasonic agitation has been a suggested alternative or addition to spray nozzles for rinsing but has not been selected for the initial series of full-scale tests.

CONTENTS

SUMMARY iii

1.0 INTRODUCTION 1.1

2.0 CONCLUSIONS AND RECOMMENDATIONS 2.1

2.1 CONCLUSIIONS 2.1

2.2 RECOMMENDATIONS 2.1

3.0 BACKGROUND 3.1

4.0 TEST DESCRIPTION 4.1

4.1 TEST PHASES 4.1

4.1.1 Phase 1: Preparation of SS Coupons 4.1

4.1.2 Phase 2: Preparation of ^{137}Cs Contaminated SS Coupons 4.1

4.1.3 Phase 3: Oxidation of Contaminated Coupons 4.1

4.1.4 Phase 4: Decontamination of Contaminated Coupons 4.2

4.1.5 Phase 5: Smear Tests of Decontaminated Coupons 4.2

4.2 SMEAR TESTING 4.3

5.0 RESULTS AND DISCUSSION 5.1

5.1 EFFECT OF Ce(IV) CONCENTRATION 5.2

5.2 EFFECT OF TEMPERATURE 5.2

5.3 EFFECT OF ACID CONCENTRATION 5.4

5.4 EFFECT OF CONTACT TIME 5.5

6.0 REFERENCES 6.1

APPENDIX A A.1

FIGURES

3.1 Effect of Cerium Concentration on the Dissolution of Stainless Steel, 65°C 3.2

4.1 Smear Tool for Ce(IV) Decontamination Testing 4.4

5.1 Smear Count (dpm/100 cm^2) and Penetration (μm) as a Function of the Ce(IV) Concentration 5.3

5.2 Smear Count (dpm/100 cm^2) and Penetration (μm) as a Function of Temperature 5.4

5.3 Smear Count (dpm/100 cm^2) and Penetration (μm) as a Function of Contact Time 5.6

5.4 Calculated Penetration (μm) as a Function of Contact Time 5.7

TABLES

5.1 Ce(IV) Concentration 5.3

5.2 Temperature 5.4

5.3 Acid Concentration 5.5

5.4 Contact Time 5.6

A.1 Coupon Weight Values Before and After Decontamination A.1

A.2 Ce(IV) Decontamination Test Conditions A.2

A.3 Decontamination Observations A.3

A.4 Decontamination Smear Results A.4

1.0 INTRODUCTION

The Hanford Waste Vitrification Plant (HWVP) is being designed to provide a vitrification facility to immobilize Hanford high-level waste (HLW) into a borosilicate glass matrix. The HLW will be pretreated and transferred to the vitrification facility as a feed slurry. In the HWVP, the waste is concentrated, chemically adjusted to create melter feed, and then converted to glass. The glass product will be sealed in stainless steel (SS) canisters, which are then decontaminated to remove smearable contamination and stored on-site until shipped to a federal repository. During the filling process and canister-handling operations, the outer surfaces of the canisters will become contaminated.

The current HWVP reference process for canister decontamination uses an air-atomized frit/water slurry blaster designed for the Savannah River Defense Waste Processing Facility (DWPF). Several other methods of canister decontamination have been investigated, including electropolishing, abrasive slurry blasting, high-pressure water washing, ultrasonic cleaning, and more recently the Ce(IV)/HNO_3 chemical milling process (Bray 1988). An earlier evaluation by Westinghouse Hanford Company (WHC) identified incentives to evaluate potential HWVP cost savings from adapting the Ce(IV)/HNO_3 canister decontamination approach (Bray 1988; Bray and Seay 1988) being developed for the West Valley Demonstration Project (WVDP) at West Valley, New York. Development studies were recommended by WHC to address issues related to further assessment of the adaptation of the Ce(IV)/HNO_3 decontamination system to HWVP, and to resolve a number of technical uncertainties.

The primary objective of this test was to determine the adequacy of the Ce(IV)/HNO_3 decontamination process to remove smearable radioactivity (^{137}Cs) from radioactive-contaminated 304L SS coupons that have been fully oxidized by a simulated canister-filling heat treatment cycle.

2.0 CONCLUSIONS AND RECOMMENDATIONS

2.1 CONCLUSIONS

- Results of these tests corroborated results of earlier similar tests. As discussed elsewhere in this report, earlier work comprised testing with oxidized but uncontaminated coupons and testing with contaminated but unoxidized coupons. The purpose of these latter tests was to determine if there might be any different response with coupons that had been contaminated and then oxidized to simulate canister filling with molten glass. The number of individual tests was limited, but no significant difference was noted between the results of these and earlier tests.

- A concentration of 1.4 moles to 2.7 moles of Ce(IV) per square meter of coupon surface area was adequate to decontaminate the coupons to below the Waste Acceptance Preliminary Specifications (WAPS) limits of 2200 dpm gamma/100 cm^2 of smearable contamination (DOE 1990). This concentration of Ce(IV) was adequate when used in conjunction with a soak time of 6 h, a soak temperature of 65°C, and in a solution of 0.5 M to 1.0 M HNO_3.

- Nitric acid alone at 0.5 M was insufficient for decontaminating the coupons.

- With a solution of 0.5 M HNO_3 and 0.02 M Ce(IV) at 90°C, a white precipitate believed to be an insoluble cerium salt was observed, and duplicate coupon results were inconsistent. A solubility problem with the Ce(IV) may exist at this high cerium concentration and temperature.

2.2 RECOMMENDATIONS

- Closely monitor full-scale testing to be conducted at WVDP. A need for additional engineering tests may be identified based on these results.

- Low-pressure water rinsing of certain coupons after Ce(IV) decontamination in the laboratory tests appeared inadequate to fully remove loosely held oxide film from the coupons. Although test results do not indicate a direct correlation of remaining smearable contamination and remaining loose oxide, further investigation of more energetic rinsing techniques after completion of the engineering tests is recommended.

- A better understanding of cerium solubility in nitric acid solutions is needed. Further investigation of the suspected retrograde solubility at higher temperatures is recommended to provide a more detailed understanding of the process.

3.0 BACKGROUND

The WVDP selected the Ce(IV) canister decontamination process based on data obtained from Pacific Northwest Laboratory (PNL)[a] laboratory-scale testing. The decontamination process has been tested on SS coupons hung on the outside of canisters and contaminated during actual HLW processing that involved the PNL Radioactive Liquid-Fed Ceramic Melter (RLFCM). Data were obtained during canister production for the Federal Republic of Germany (FRG) during FY 1987 (Thomas and Bray 1987).[b] The surfaces of the tested SS coupons were not oxidized during the FRG test. Therefore, the decontamination process had not been tested for decontamination of radionuclides (i.e., ^{137}Cs) from the surface of SS that had undergone the canister heating oxidation cycle. However, fully-oxidized coupons without radioactive contamination and radioactively contaminated coupons that have not been fully oxidized have been successfully decontaminated.

To summarize Bray's previous (1988) tests, a thin layer (1.5 to 3 μm) of metal was effectively removed from the surface of 304L SS coupons by chemical milling with a 0.5 M HNO_3 solution containing ~0.65 to 1.4 moles of Ce(IV) per square meter of surface area (0.06 to 0.13 moles of Ce(IV)/ft^2). For contaminated (but unoxidized) coupons, it was necessary to remove only ~2 to 3 μm (about 0.1 mil) of the SS surface to provide adequate decontamination. Nitric acid treatment alone was insufficient in both cases. Based on the information in Bray (1988), chemical milling contact time was inversely proportional to the temperature. Contact times from 3 to 6 h at 65°C were adequate to decontaminate the FRG/RLFCM coupons to levels below the WAPS (see Figure 3.1). Preliminary examination of coupon photomicrographs using a scanning electron

---

(a) Pacific Northwest Laboratory is operated by Battelle Memorial Institute for the U.S. Department of Fnergy under Contract DE-AC06-76RLO 1830.

(b) Thomas, N. M., and L. A. Bray. 1987. Summary of RLFCM Canister Contamination Testing. WVST 87-263B, prepared for West Valley Nuclear Services Co., Inc., West Valley, New York.

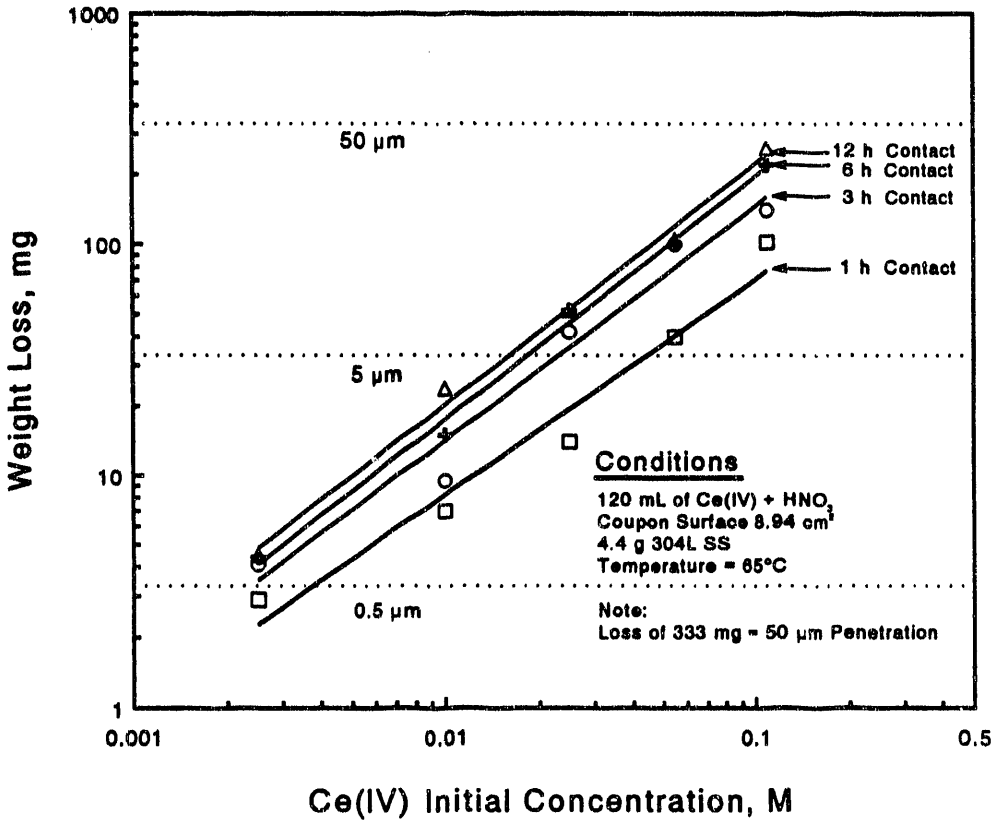

FIGURE 3.1. Effect of Cerium Concentration on the Dissolution of Stainless Steel, 65°C (Bray 1988)

microscope (SEM) showed that the surface dissolution was essentially uniform with minimal intergranular attack at Ce(IV) milling, or surface penetration, of less than ~6 µm (Bray 1988).

Additional work conducted by PNL for WVDP determined there was no impact on the canister label and welds (Westerman 1991),[a] and that even extensive metal removal (four-fold above that required) by the Ce(IV) decontamination method had no stress corrosion cracking-inducing effect on the canister

(a) Westerman, R. E. 1991. Legibility of Canister Weld Bead Labels Following Simulated Decontamination Treatments. WVSP 91-047, prepared for West Valley Nuclear Services Co., Inc., by the Pacific Northwest Laboratory, Richland, Washington.

material tested (Pitman and Westerman 1990;[a] Westerman 1991).[b] Microscopic analysis of test coupons that had undergone "extensive" metal removal up to 11 μm (~0.4 mil) of surface penetration showed some preferential attack at grain boundaries, as expected. However, the attack appeared as blunt grooves at the grain boundaries, rather than deep, narrow cracks into the metal structure that are typically associated with stress corrosion cracking.

During FY 1992 the WVDP plans to perform Ce(IV)/HNO_3 decontamination tests on full-size glass-filled canisters that are not radioactively contaminated. Data obtained from these tests will include confirmation of required soak time, temperature, Ce(IV)/HNO_3 concentrations, and will aid in the design of the decontamination equipment. These tests will be monitored, and results will be evaluated for applicability to HWVP canister decontamination.

(a) Pitman, S. G., and R. E. Westerman. 1990. Evaluation of the Potential Susceptibility of AISI Type 304L Stainless Steel Waste Canisters to Stress Corrosion Cracking (SSC) from HNO_3-Ce(IV) Decontamination - An Interpretive Literature Survey. WVSP 90-034, prepared for West Valley Nuclear Services Co., Inc., by the Pacific Northwest Laboratory, Richland, Washington.

(b) Westerman, R. E. 1991. An Investigation of the Potential for a HNO_3-Cerium(IV) Decontamination Treatment to Induce Stress-Corrosion Cracking in Canister Materials. WVSP 91-042, prepared for West Valley Nuclear Services Co., Inc., by the Pacific Northwest Laboratory, Richland, Washington.

4.0 TEST DESCRIPTION

4.1 TEST PHASES

This section describes the steps required to test fully-oxidized coupons contaminated with radioactive ^{137}Cs. The experimental work was completed in five phases. The laboratory procedure for each testing phase is described below.

4.1.1 Phase 1: Preparation of SS Coupons

Stainless steel coupons measuring 1 in. x 0.6 in. x 0.06 in. thick (~9-cm^2 surface area) were cut from a single sheet of 304L stainless steel. The 304L was procured with a standard mill finish, but otherwise the surface was free of oxide. The following information was obtained for each coupon:

Certification No. of SS and Heat No.

Size: 1 in. x 0.6 in. x 0.06 in. thick with 0.12-in. hole for hanging

Note: The dimensions of ten randomly selected coupons were measured with micrometers. The average dimensions from these measurements were then used to determine a surface area (8.806 cm^2), which was used for later calculations.

Weight: ~4.5 g using a five-place balance

Marking: Each sample was marked with an identification number.

Before use, each coupon was washed with alcohol to remove cutting oil.

4.1.2 Phase 2: Preparation of ^{137}Cs Contaminated SS Coupons

The coupons were contaminated with radioactive cesium chloride. This was accomplished by soaking each coupon for 24 h in 10 mL of distilled water containing ^{137}Cs, followed by air drying. The ^{137}Cs solution was prepared by diluting a stock solution containing 9.68 mCi/mL ^{137}Cs to a "working solution" containing 0.002 mCi/mL ^{137}Cs. A separate bottle containing 10 mL of this working solution was prepared for each coupon.

4.1.3 Phase 3: Oxidation of Contaminated Coupons

The radioactive contaminated coupons were heat treated in a furnace at 600°C for 16 h, in an air atmosphere. This procedure was first used by

W. N. Rankin (1982) to produce an oxide layer on SS similar to glass-filled canister surfaces. The heat-treated coupons were then cooled, reweighed, and counted to determine their oxidized weight and residual radioactivity (Appendix, Table A.1 and A.4). During surface oxidation, the coupons were suspended in the furnace on SS wires.

4.1.4 Phase 4: Decontamination of Contaminated Coupons

Twenty-four ^{137}Cs contaminated and heat-treated (600°C for 16 h) coupons were each decontaminated using 120 mL of Ce(IV)/HNO_3 test solution (136 L/m^2). One additional coupon was tested in 0.5 M HNO_3 with no cerium. The coupons were tested under 12 conditions by varying the Ce(IV)/HNO_3 concentration (0.005 M to 0.02 M Ce(IV)/0.2 M to 1 M HNO_3), the contact time (3 to 12 h), and temperature (25° to 90°C), (Appendix, Table A.2). The Ce(IV) solutions were prepared by diluting from a concentrated Ce/HNO_3 stock solution. Prior to testing, the stock solution was oxidized in an electrochemical cell to ensure complete oxidation of cerium ion to Ce(IV).

Using Teflon pipe tape, the coupons were each suspended in 120 mL of decontamination solution contained in 250 mL glass bottles with screw caps. The bottles were placed in a temperature controlled water-bath shaker-table to maintain the assigned temperature. The coupons were removed from the solution and rinsed thoroughly with distilled water from a laboratory wash bottle. The washed coupons were then allowed to air dry for 24 h. The loss in coupon metal and oxide weight was determined using a five-place analytical balance (see Table A.1). The loss of surface radioactive contamination was determined by gamma counting the coupon surface before and after decontamination. Each face of each coupon was then smear tested to determine the decontamination efficiency as a function of test conditions.

4.1.5 Phase 5: Smear Tests of Decontaminated Coupons

Smear tests of the decontaminated SS coupons were performed by wiping both sides of the coupon with circular (4.5 cm dia.) adhesive-backed paper swabs (radiation monitoring technical smear pads).[a] The swabs were then

---

(a) Radiation Specialty Products, Inc., Dothan, Alabama 36302.

gamma counted to determine the decontamination efficiency as a function of the test conditions, as compared to WAPS acceptance criteria (<2,200 dpm gamma/ 100 cm^2 of surface).

4.2 SMEAR TESTING

In practice, smear testing is not a well-defined procedure. The purpose of smearing most objects is to determine whether or not any removable radioactive contamination exists on its surface. Because the object is typically wiped with a hand-held smear swab, the pressure applied and the area smeared are not precisely known. In the HWVP canister decontamination process, however, smear testing of decontaminated glass-filled canisters will be performed remotely by mechanical means. The variables will therefore be better defined and more consistent than is usually possible. To determine the conformance of test specimens to the WAPS, a hot-cell mechanical process was approximated as closely as possible by using a specially designed smear tool in a predetermined procedure. The specific technique to be used for HWVP canister smear testing is yet unknown, but for this test was assumed to be similar to that anticipated for the DWPF canister smear testing (i.e., smearing a known area of the canister surface with a smear pad applied at a known and constant pressure).

This smear tool consisted of a hard rubber disc attached to the end of a spring (Figure 4.1). The spring was housed in a tube long enough to permit compression of the spring and allow the smear swab to wipe the coupon's surface with 2.03 lbs/in.^{2}[a] of force. The diameter of the rubber disc was sized to fit an adhesive smear swab.

The smear tool used two plates, one upper and one lower. The upper plate was the same thickness as the coupon, and had a rectangular hole cut through it just large enough to fit the coupon inside. The second plate was solid (no hole) and fit beneath the upper plate during the smear test. The smear test was performed as follows:

(a) Information provided by Savannah River Site.

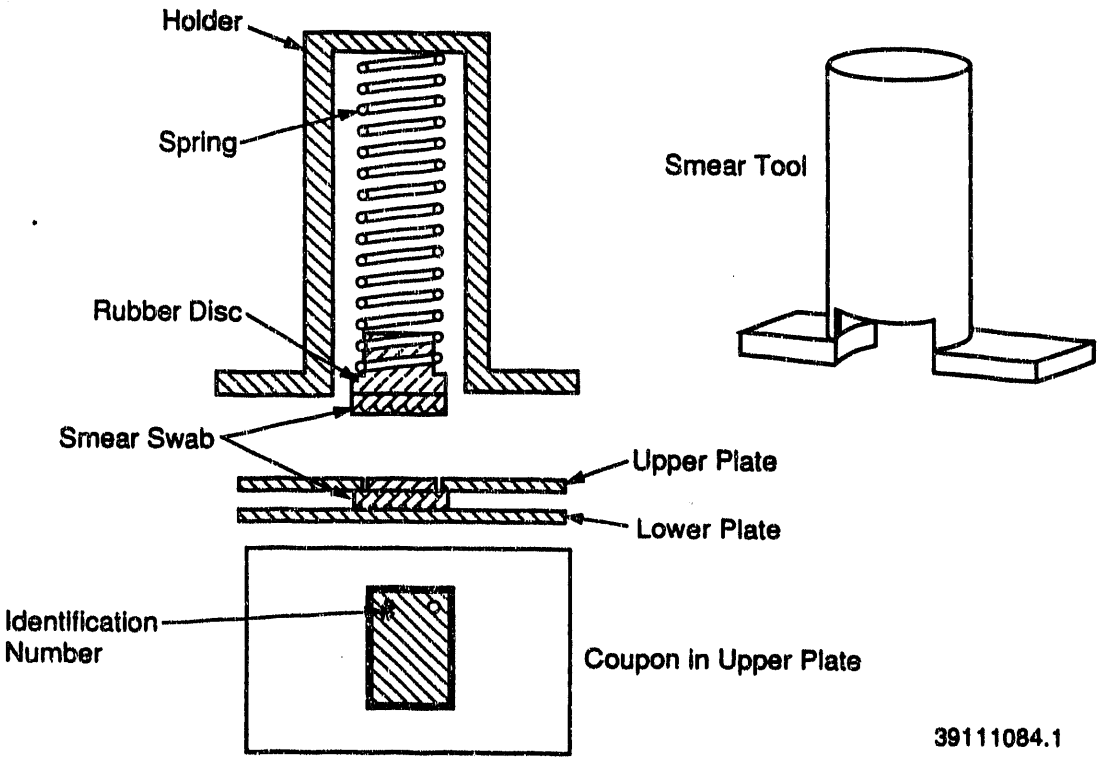

FIGURE 4.1. Smear Tool for Ce(IV) Decontamination Testing

1. One smear swab was adhered face-up to the center of the lower (solid) plate. The upper plate (with the rectangular hole) was placed directly above the lower plate, allowing the smear swab to be exposed through the rectangular hole. The decontaminated coupon was then placed in the hole, so that its identification number faced up. A second adhesive smear swab was attached to the rubber disc on the smear tool.

2. The smear tool was then held vertically and placed entirely to one side of the coupon. Next, the smear tool was pressed down until the housing was in contact with the upper plate, and the spring and disc were compressed within the housing. While the spring was compressed, the tool was drawn across the plate (with coupon) in a straight line until the smear swab was completely on the opposite side of the coupon.

3. The used smear swab was removed from the disc and placed in a plastic snap-lid sample vial. The coupon was then picked up with tongs and turned over to expose the back face in the slotted plate. A clean smear swab was then attached to the smear tool.

4. Step (2) was repeated to smear the second side of the coupon.

5. The smear swab used in step (4) was removed from the rubber disc and placed on top of the first smear swab (step 3) in the plastic snap-lid sample vial. The smear swab underneath the top plate was also removed and added to the snap-lid sample vial. All three smear pads were stored together in the sealed container for gamma counting.

6. Both plates and the smear tool were decontaminated with alcohol and water and surveyed before reuse.

7. A counting standard was prepared by absorbing and drying a known ^{137}Cs solution on a smear swab and placing the swab in a plastic snap-lid sample vial. The prepared standard was counted with the samples to correct the unknown sample values for vial geometry.

5.0 RESULTS AND DISCUSSION

A test program was completed to provide further data to support the selection of an effective flowsheet for the decontamination of HWVP vitrification canisters. The results reconfirmed the predictability of this unique chemical milling and decontamination process. For contaminated (but unoxidized) coupons (Bray 1988), it was necessary to remove only ~2 to 3 μm (about 0.1 mil) of the SS surface to provide adequate decontamination. For contaminated oxidized coupons in this study, removal of 2.5 to 5 μm of the SS surface provided adequate decontamination. Nitric acid treatment alone was insufficient to provide adequate decontamination in either study. A chemical milling contact time of 6 h at 65°C was adequate to decontaminate the coupons below the Waste Acceptance Preliminary Specifications (WAPS, DOE 1990).

Actual radioactive-contaminated SS canisters or coupon samples, fully oxidized by a canister-filling heat treatment cycle, were unavailable for this study. As outlined in Section 4.0, test coupons were fabricated, contaminated with ^{137}Cs, and heat-treated at 600°C for 16 h in air to simulate the surface of HWVP vitrification canisters. Twenty-four ^{137}Cs contaminated and heat-treated (8.8 cm^2 of surface) coupons were subjected to various conditions using 120 mL of solution for each coupon (136 L/m^2). Coupons were tested under 12 conditions by varying the Ce(IV)/HNO_3 concentration [0.005 M to 0.02 M Ce(IV)/0.2 M to 1 M HNO_3], the contact time (3 to 12 h), and the solution temperature (25° to 90°C). The loss in coupon metal and oxide weight was determined using a five-place analytical balance (Appendix, Table A.1). The loss of surface radioactive contamination was determined by gamma counting the coupon surface before and after decontamination (Appendix, Tables A.3 and A.4). The coupons were then smeared on both sides to determine the decontamination efficiency as a function of test conditions (compared to WAPS) (DOE 1990) (Appendix, Table A.4).

The test conditions for coupons 15 and 16 were assumed to be the "base case" to which all other conditions were compared. The "base case" conditions were previously selected (Bray 1988) as the minimum conditions to adequately decontaminate the SS canisters. Those conditions were 65°C, 6 h, and

1.4 moles of Ce(IV)/m^2 (0.01 moles of Ce(IV)/120 mL/8.8 cm^2) to remove 3 μm of SS surface. The "base case" was tested against four variables: contact time, temperature, Ce(IV) concentration, and HNO_3 concentration.

In certain cases, a layer of loosely held oxide remained on the SS surface after removal of the coupon from the test solution. Low-pressure water from a standard laboratory wash bottle was used to rinse each coupon, usually removing the loosely held oxide. In several tests that were not "base case," the oxide was only partially removed or not at all. Effective rinsing requirements is an area of engineering uncertainty that will be resolved when the decontamination process is scaled up by a factor of 5,000:1 by the WVDP and tested in FY 1992 at West Valley using full-scale glass-filled canisters. West Valley will test a series of jet nozzles for washing the decontaminated canister free of any loose oxide and decontamination solution. Ultrasonic agitation has been suggested as an alternative or an addition to spray nozzles, but has not been selected for the initial series of full-scale tests.

5.1 EFFECT OF Ce(IV) CONCENTRATION

The results show (at a contact time of 6 h, a temperature of 65°C, and at an acid concentration of 0.5 M HNO_3) a direct relationship between the Ce(IV) concentration and the Cs decontamination factor (DF), the wipe results (dpm/100 cm^2), and the penetration depth (μm). These results are presented in Table 5.1 and Figure 5.1. A concentration of 0.01 M Ce(IV) satisfies the goal of <2,200 dpm/cm^2 with the chemical milling of >2 μm of SS.

5.2 EFFECT OF TEMPERATURE

The rate of SS dissolution is directly dependent on the solution temperature after 6 h of contact, at 0.01 M Ce(IV)/0.5 M HNO_3, between 25° and 65°C (Table 5.2). The results for tests at 25° and 45°C exceeded the smear limit of <2,200 dpm gamma/100 cm^2 (Figure 5.2). The results at 90°C, although meeting the smear limit, are inconsistent with the other results and may be due to a precipitate found in the final solution (Appendix, Table A.3).

TABLE 5.1. Ce(IV) Concentration (Constant: 6 h, 65°C, 0.5 M HNO_3)

Coupon No.	Ce(IV), M	^{137}Cs, DF	dpm/100 cm^2	Penetration, μm
35	0	6	5.2E4	0.05
25	0.005	16	6.3E4	1.2
26		11	1.4E5	1.1
15	0.01	1,113	772	2.5
16		977	783	2.4
23	0.02	2,296	NDA[a]	4.7
24		2,003	NDA	4.9

(a) No Detectable Activity (Detection limit for this size and geometry of coupon is estimated to be approximately 1 dpm/100cm^2.)

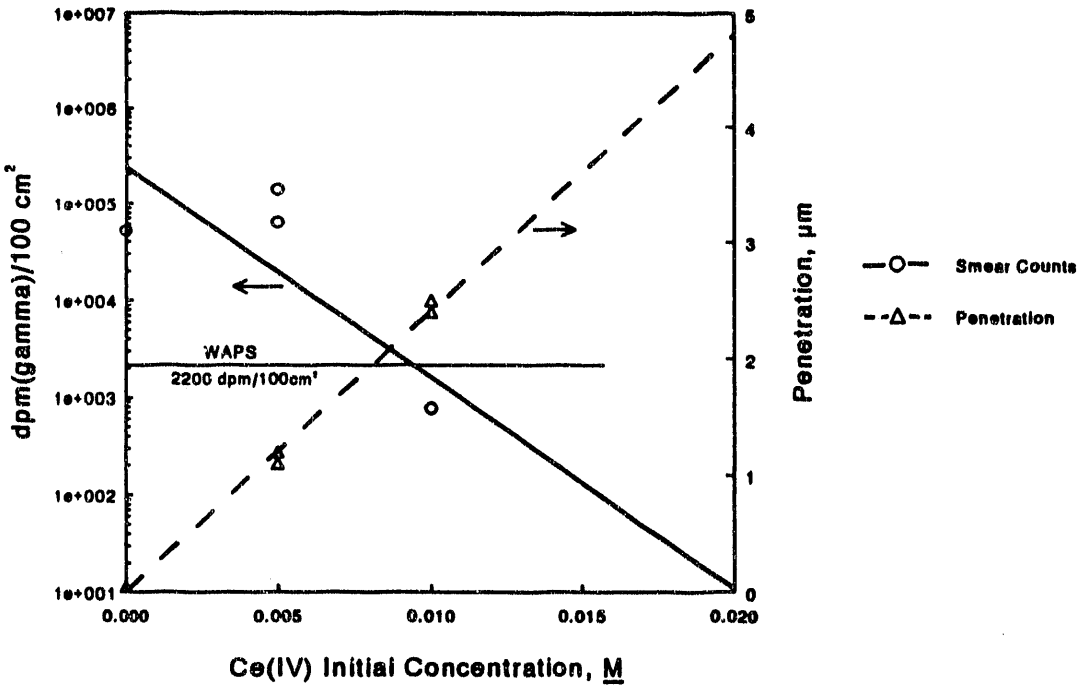

FIGURE 5.1. Smear Count (dpm/100 cm^2) and Penetration (μm) as a Function of the Ce(IV) Concentration. Conditions: contact time, 6 h; 0.5 M HNO_3; volume, 120 mL; surface area, 8.8 cm^2; temperature, 65°C

TABLE 5.2. Temperature [Constant: 6 h, 0.5 M HNO_3, 0.01 M Ce(IV)]

Coupon No.	Temperature, °C	^{137}Cs, DF	dpm/100 cm^2	Penetration, μm
11	25	3	3.7E5	0.36
12		3	4.8E5	0.35
13	45	421	2.8E3	1.8
14		10	2.1E5	1.6
15	65	1,113	772	2.5
16		977	783	2.4
17	90	1,096	977	2.0
18		391	1,340	1.5

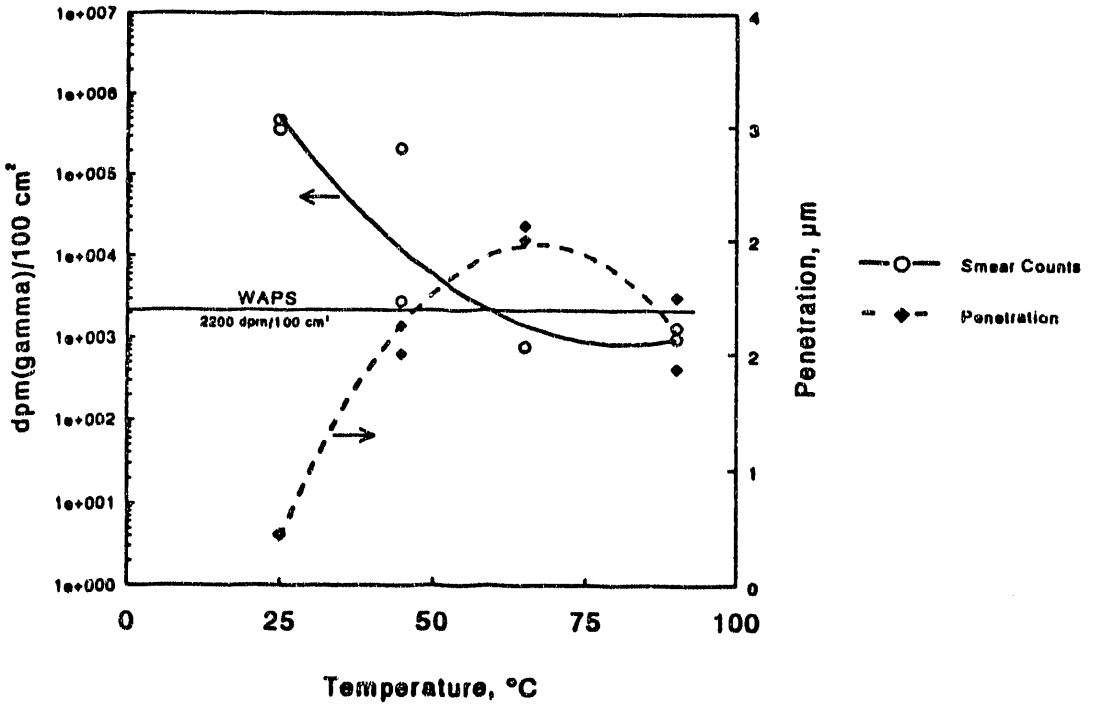

FIGURE 5.2. Smear Count (dpm/100 cm^2) and Penetration (μm) as a Function of Temperature. Conditions: contact time, 6 h; 0.5 M HNO_3; 0.01 M Ce (IV); volume, 120 mL; surface area, 8.8 cm^2

5.3 EFFECT OF ACID CONCENTRATION

Previous work (Bray 1988) had not evaluated the effect of acid concentration. In this study, the acid concentration was varied from 0.2 to 1 M HNO_3 (Table 5.3). The test solutions containing 0.2 M HNO_3 were very

TABLE 5.3. Acid Concentration [Constant: 6 h, 0.01 M Ce(IV)]

Coupon No.	HNO_3, M	^{137}Cs, DF	dpm/100 cm^2	Penetration, μm
21	0.2	7	1.3E5	0.19
22		7	1.5E5	0.25
15	0.5	1,113	772	2.5
16		977	783	2.4
19	1.0	1,852	193	2.5
20		1,914	NDA[a]	2.5

(a) No Detectable Activity (detection limit ~1 dpm/100 cm^2).

cloudy. Based on visual observations, the coupons appeared to have been coated with a cerium salt precipitate, resulting in a poor Cs DF and a lack of SS dissolution. Cerium does appear to have limited solubility in diute HNO_3. Additional work is needed in this area. It is recommended that the acid concentration be maintained at 0.5 to 1 M HNO_3 (1 M HNO_3 conditions gave the best results).

5.4 EFFECT OF CONTACT TIME

The solution coupon-contact time was varied from 3 to 12 h at 65°C and 0.5 M HNO_3, for 0.01 and 0.02 M Ce(IV) (see Table 5.4). Under all conditions, the coupons were determined to be decontaminated to <2,200 dpm gamma/100 cm^2 (Figure 5.3). The SS dissolution (penetration depth) was constant after 6 h (Figure 5.4).

TABLE 5.4. Contact Time (Constant: 65°C, 0.5 M HNO_3)

Coupon No.	Contact Time, h	Ce(IV), M	^{137}Cs, DF	dpm/100 cm^2	Penetration, μm
27	3	0.01	1,512	386	2.2
28			1,258	NDA[a]	2.1
15	6	0.01	1,113	772	2.5
16			977	783	2.4
29	12	0.01	242	NDA	2.5
30			2,537	NDA	2.5
31	3	0.02	1,840	125	3.2
32			1,220	NDA	3.3
23	6	0.02	2,296	NDA	4.7
24			2,003	NDA	4.9
33	12	0.02	939	NDA	4.8
34			935	NDA	4.6

(a) NDA - No Detectable Activity (detection limit ~1 dpm/100 cm^2).

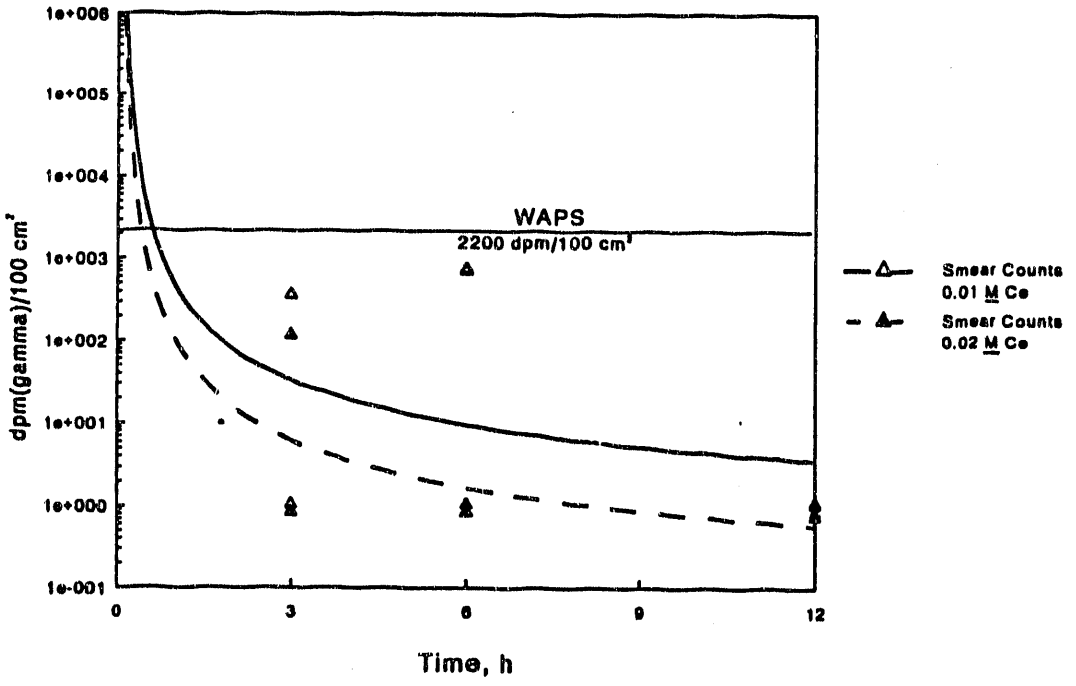

FIGURE 5.3. Smear Count (dpm/100 cm^2) as a Function of Contact Time. Conditions: 0.5 M HNO_3; volume, 120 mL; surface area, 8.8 cm^2; temperature, 65°C. Curves shown are least-squares fit of power curve to data.

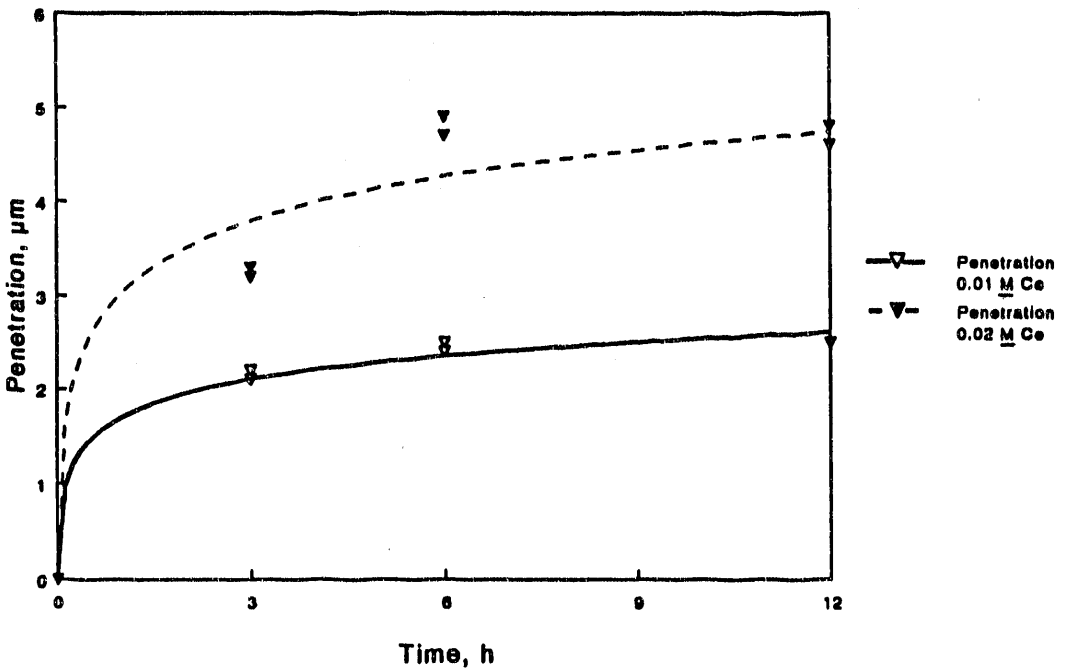

FIGURE 5.4 Calculated Penetration (µm) as a Function of Contact Time. Conditions: 0.5 M HNO_3; volume, 120 mL; surface area, 8.8 cm^2; temperature, 65°C. Curves shown are least-squares fit of log curve to data.

6.0 REFERENCES

Bray, L. A. 1988. Development of a Chemical Process Using Nitric Acid - Cerium (IV) for Decontamination of High-Level Waste Canisters. PNL-6567, Pacific Northwest Laboratory, Richland, Washington.

Bray, L. A., and J. M. Seay. 1988. Development and Design Application of Cerium (IV) Decontamination Process. PNL-SA-15962, Pacific Northwest Laboratory, Richland, Washington.

Rankin, W. N. 1982. "Decontamination Processes for Waste Glass Canisters." Nuclear Technology, Vol. 59.

U.S. Department of Energy (DOE). 1990. Waste Acceptance Preliminary Specifications for High-Level Waste Glass, YMP/90-65, Office of Civilian Radioactive Waste Management, Department of Energy, Washington, D.C.

APPENDIX A

SUMMARY OF DECONTAMINATION TEST CONDITIONS, RESULTS, AND OBSERVATIONS

TABLE A.1. Coupon Weight Values Before and After Decontamination

Coupon	Initial Weight, g	Weight After Oxide, g	Weight of Oxide, g	Weight After Ce(IV), g	Loss of Initial Weight, g	Loss of Oxide Weight, g	Contact Time, h	Temperature, °C	Ce(IV), M	HNO_3, M	Penetration, µm[a]
11	4.26441	4.26914	0.00473	4.26187	0.00254	0.00727	6	25	0.01[b]	0.5	0.36
12	4.28462	4.28942	0.00480	4.28218	0.00244	0.00724					0.35
13	4.28577	4.29141	0.00564	4.27294	0.01283	0.01847	6	45	0.01	0.5	1.0
14	4.24138	4.24556	0.00418	4.23005	0.01133	0.01551					1.6
15	4.25295	4.25750	0.00455	4.23537	0.01758	0.02213	6	65	0.01	0.5	2.5
16	4.28200	4.28487	0.00287	4.26480	0.01720	0.02007					2.4
17	4.23388	4.23795	0.00407	4.21969	0.01419	0.01826	6	90	0.01	0.5	2.0
18	4.23134	4.23595	0.00461	4.22082	0.01052	0.01513					1.5
19	4.31276	4.31770	0.00494	4.29536	0.01740	0.02234	6	65	0.01	1.0	2.5
20	4.30168	4.30584	0.00416	4.28396	0.01772	0.02188					2.5
21	4.24402	4.24887	0.00485	4.24267	0.00135	0.00620	6	65	0.01	0.2	0.19
22	4.16721	4.17140	0.00419	4.16543	0.00178	0.00597					0.25
23	4.24872	4.25363	0.00491	4.21541	0.03331	0.03822	6	65	0.02[c]	0.5	4.7
24	4.30233	4.30596	0.00363	4.26757	0.03476	0.03839					4.9
25	4.27682	4.28014	0.00332	4.26839	0.00843	0.01175	6	65	0.005	0.5	1.2
26	4.25924	4.26418	0.00494	4.25131	0.00793	0.01287					1.1
27	4.31231	4.31620	0.00389	4.29696	0.01535	0.01924	3	65	0.01	0.5	2.2
28	4.28031	4.28368	0.00337	4.26547	0.01484	0.01821					2.1
29	4.29865	4.30344	0.00479	4.28133	0.01732	0.02211	12	65	0.01	0.5	2.5
30	4.29443	4.29841	0.00398	4.27688	0.01755	0.02153					2.5
31	4.23578	4.23982	0.00404	4.21288	0.02290	0.02694	3	65	0.02	0.5	3.2
32	4.31087	4.31631	0.00544	4.28772	0.02315	0.02859					3.3
33	4.19898	4.20465	0.00567	4.16536	0.03362	0.03929	12	65	0.02	0.5	4.8
34	4.24933	4.25422	0.00489	4.21712	0.03221	0.03710					4.6
35	4.19397	4.19850	0.00453	4.19359	0.00038	0.00491	6	65	0	0.5	0.05

(a) $\dfrac{\text{Loss of SS(metal), g}}{\text{SpG SS(8.02 g/cm}^3)} \times \dfrac{10^4\ \mu\text{m/cm}}{\text{Surface Area (8.8 cm}^2)} = \mu\text{m of metal dissolved.}$

(b) 0.01 moles Ce(IV)/8.8 cm^2 = 1.36 moles Ce(IV)/m^2.

(c) 0.02 moles Ce(IV)/8.8 cm^2 = 2.73 moles Ce(IV)/m^2.

TABLE A.2. Ce(IV) Decontamination Test Conditions

Coupon	Temperature, °C	0.542 M Ce(IV), mL	15.7 M HNO_3, mL	Vol., mL	Contact Time, h
11	25	2.21 (0.01)	3.61 (0.5)	120	6
12	25	2.21 (0.01)	3.61 (0.5)	120	6
13	45	2.21 (0.01)	3.61 (0.5)	120	6
14	45	2.21 (0.01)	3.61 (0.5)	120	6
15	65	2.21 (0.01)	3.61 (0.5)	120	6
16	65	2.21 (0.01)	3.61 (0.5)	120	6
17	90	2.21 (0.01)	3.61 (0.5)	120	6
18	90	2.21 (0.01)	3.61 (0.5)	120	6
19	65	2.21 (0.01)	7.43 (1.0)	120	6
20	65	2.21 (0.01)	7.43 (1.0)	120	6
21	65	2.21 (0.01)	1.31 (0.2)	120	6
22	65	2.21 (0.01)	1.31 (0.2)	120	6
23	65	4.42 (0.02)	3.39 (0.5)	120	6
24	65	4.42 (0.02)	3.39 (0.5)	120	6
25	65	1.10 (0.005)	3.72 (0.5)	120	6
26	65	1.10 (0.005)	3.72 (0.5)	120	6
27	65	2.21 (0.01)	3.61 (0.5)	120	3
28	65	2.21 (0.01)	3.61 (0.5)	120	3
29	65	2.21 (0.01)	3.61 (0.5)	120	12
30	65	2.21 (0.01)	3.61 (0.5)	120	12
31	65	4.42 (0.02)	3.39 (0.5)	120	3
32	65	4.42 (0.02)	3.39 (0.5)	120	3
33	65	4.42 (0.02)	3.39 (0.5)	120	12
34	65	4.42 (0.02)	3.39 (0.5)	120	12
35	65	- 0 -	3.82 (0.5)	120	6

TABLE A.4. Decontamination Smear Results

Coupon	Initial Coupon Count, dpm Cs	Coupon[a] After Treatment, dpm Cs	^{137}Cs DF	Smear[b] Count, dpm Cs	dpm/100 cm^2[c]	Contact Time, h	Temperature, °C	Ce(IV), M	HNO_3, M
11	7.75E5	2.46E5	3	3.23E4	3.67E5	6	25	0.01	0.5
12	7.50E5	2.37E5	3	3.86E4	4.78E5				
13	7.37E5	1.75E3	421	243	2.80E3	6	45	0.01	0.5
14	1.13E6	1.11E5	10	1.88E4	2.13E5				
15	6.69E5	601	1,113	68 ± 18%	772	6	65	0.01	0.5
16	7.25E5	742	977	69 ± 19%	783				
17	1.16E6	1,058	1,096	86 ± 17%	977	6	90	0.01	0.5
18	6.94E5	1,776	391	18 ± 13%	1,340				
19	7.37E5	398	1,852	17 ± 42%	193	6	65	0.01	1.0
20	6.03E5	315	1,914	NDA[d]	NDA				
21	1.13E6	1.67E5	7	1.17E4	1.33E5	6	65	0.01	0.2
22	8.82E5	1.30E5	7	1.33E4	1.51E5				
23	6.26E5	285	2,196	NDA	NDA	6	65	0.02	0.5
24	6.35E5	317	2,003	NDA	NDA				
25	6.95E5	4.35E4	16	5.56E3	6.31E4	6	65	0.005	0.5
26	6.17E5	5.63E4	11	1.22E4	1.39E5				
27	5.88E5	389	1,512	34 ± 30%	386	3	65	0.01	0.5
28	6.15E5	489	1,258	NDA	NDA				
29	7.37E5	3.05E3	242	NDA	NDA	12	65	0.01	0.5
30	6.19E5	244	2,537	NDA	NDA				
31	8.04E5	437	1,840	11 ± 61%	125	3	65	0.02	0.5
32	5.93E5	486	1,220	NDA	NDA				
33	6.61E5	704	939	NDA	NDA	12	65	0.02	0.5
34	6.29E5	673	935	NDA	NDA				
35	8.76E5	1.44E5	6	4.56E3	5.18E4	6	65	0	0.5

(a) Treatment of a coupon (8.8 cm^2) with 120 mL of Ce(IV) and HNO_3.
(b) Surface area, 8.8 cm^2.
(c) Meets waste acceptance specifications if <2,200 dpm gamma/100 cm^2 surface.
(d) NDA = Below detection limit.

TABLE A.3. Decontamination Observations

Coupon	Observations after Decontamination: Solution	Observations after Decontamination: Coupon Surface	Contact Time, h	Temperature, °C	Ce(IV), M	HNO_3, M
11	Clear, yellow-orange	Oxide layer not removed	6	25	0.01	0.5
12	Clear, yellow-orange	Oxide layer not removed	6	25	0.01	0.5
13	Clear, orange	Oxide layer removed	6	45	0.01	0.5
14	Clear, orange	Oxide layer partially removed				
15	Clear, yellow-orange	Clean, no oxide	6	65	0.01	0.5
16	Clear, yellow-orange	Clean, no oxide	6	65	0.01	0.5
17	Very cloudy, yellow	Clean, no oxide	6	90	0.01	0.5
18	Very cloudy, yellow	Clean, patches of oxide				
19	Clear, yellow-orange	Clean, no oxide	6	65	0.01	1.0
20	Clear, yellow-orange	Clean, no oxide	6	65	0.01	1.0
21	Cloudy, yellow	Oxide layer not removed	6	65	0.01	0.2
22	Cloudy, yellow	Oxide layer not removed	6	65	0.01	0.2
23	Cloudy, orange	~50% covered with oxide	6	65	0.02	0.5
24	Clear, orange	Clean, no oxide				
25	Clear, yellow-orange	Oxide layer not removed	6	65	0.005	0.5
26	Clear, yellow-orange	Oxide layer not removed	6	65	0.005	0.5
27	Slightly cloudy	Clean, no oxide	3	65	0.01	0.5
28	Slightly cloudy	Clean, no oxide	3	65	0.01	0.5
29	Clear, yellow	Clean, no oxide	12	65	0.01	0.5
30	Clear, yellow	Clean, no oxide	12	65	0.01	0.5
31	Very cloudy, orange	Very clean, no oxide	3	65	0.02	0.5
32	Very cloudy, orange	Very clean, no oxide	3	65	0.02	0.5
33	Cloudy, yellow	Oxide on 25% of surface	12	65	0.02	0.5
34	Cloudy, yellow	Oxide on ~20% of surface				
35	Clear, yellow-orange	Oxide layer not removed	6	65	0	0.5

DISTRIBUTION

No. of Copies

OFFSITE

12 DOE/Office of Scientific and Technical Information

2 DOE Office of Civilian Radioactive Waste Management
Forrestal Building
Washington, DC 20585
ATTN: J. W. Bartlett, RW-1
S. Brocum, RW-22

13 D. B. Leclaire, DP-30
DOE Office of Defense Programs
GTN
Washington, DC 20545
ATTN: K. A. Chacey, EM-30
J. A. Coleman, EM-35
C. R. Cooley, EM-55
S. Cowan, EM-30
J. J. Fiore, EM-423
C. Frank, EM-50
M. Frei, EM-34
T. S. Gutman
J. E. Lytle, EM-30
T. W. McIntosh, EM-343
V. G. Trice, EM-343
H. F. Walter, EM-343

J. O. Bunting
Division of High-Level Waste
Nuclear Regulatory Commission
Washington, DC 20555

J. M. Taylor
Office for the Executive Director for Operations
Mail Station 17-HI
Nuclear Regulatory Commission
Washington, DC 20555

No. of Copies

W. F. Holcomb
Environmental Protection Agency
Office of Radiation Programs (ANR-460)
401 M Street S.W.
Washington, DC 20460

P. A. Saxman
DOE Albuquerque Operations Office
P.O. Box 5400
Albuquerque, NM 87185

3 DOE Idaho Operations Office
785 DOE Place
Idaho Falls, ID 83402
ATTN: C. R. Enos
M. W. Shupe
J. E. Solecki

M. R. Jugan
DOE Oak Ridge Operations Office
P.O. Box E
Oak Ridge, TN 37830

F. T. Fong
DOE San Francisco Operations
1333 Broadway
Oakland, CA 94612

H. Brandt
DOE Savannah River Operations Office
P.O. Box A
Aiken, SC 29801

No. of
Copies

W. S. Ketola
DOE West Valley Project
P.O. Box 191
West Valley, NY 14171

C. P. Gertz
DOE Yucca Mountain Project
Phase 2
Suite 200
101 Convention Center Drive
Las Vegas, NV 89109

3 Oak Ridge National Laboratory
P.O. Box Y
Oak Ridge, TN 37830
ATTN: S. A. Meacham
L. J. Mezga
T. H. Row

2 Sandia Laboratories
P.O. Box 5800
Albuquerque, NM 87185
ATTN: R. W. Lynch
Dept. 6300
Technical Library

Westinghouse Idaho
Nuclear Co., Inc.
P.O. Box 4000
Idaho Falls, ID 83401
ATTN: D. Knecht

4 Westinghouse Savannah
River Co.
Savannah River Site
Aiken, SC 29801
ATTN: J. A. Gentilucci
E. W. Holtzscheiter
C. T. Randall
W. N. Rankin

No. of
Copies

4 West Valley Nuclear
Services Co.
P.O. Box 191
West Valley, NY 14171
ATTN: S. M. Barnes
D. Burnes
R. Palmer
L. L. Petkus

S. G. Harbison
New York State Energy Research
& Development Authority
P.O. Box 191
West Valley, NY 14171

I. L. White
New York State Energy Research
& Development Authority
P.O. Box 191
Empire State Plaza
Albany, NY 12223

ONSITE

4 DOE Richland Field Office

R. W. Brown, A5-10
S. T. Burnum, A5-16
P. E. Lamont, A5-16
E. C. Norman, A5-16

7 Westinghouse Hanford Company

K. R. Shah, G6-02
P. S. Schaus, A4-90
R. A. Smith, G6-02
G. E. Stegan, G6-06
L. D. Swenson, G6-06
E. T. Weber, G6-08
R. N. Wagner, G6-08

No. of
Copies

52 Pacific Northwest Laboratory

C. R. Allen, P7-43
L.M.G. Ballou, P7-18
L. A. Bray, P7-25 (20)
W. F. Bonner, P7-41
G. H. Bryan, P7-25
H. C. Burkholder, P7-41
J. M. Creer, G6-01
M. R. Elmore, P7-19 (10)
G. A. Jensen, G6-01
D. E. Larson, G6-01
J. L. McElroy, P7-46
J. M. Perez, Jr., P7-41
R. K. Quinn, K2-50
P. A. Scott, P7-19
L. J. Sealock, Jr., K2-10
G. J. Sevigny, P7-43
R. E. Westerman, P8-44
E. J. Wheelwright, P7-25
Publishing Coordination
Technical Report Files (5)

END

DATE
FILMED
10/28/92